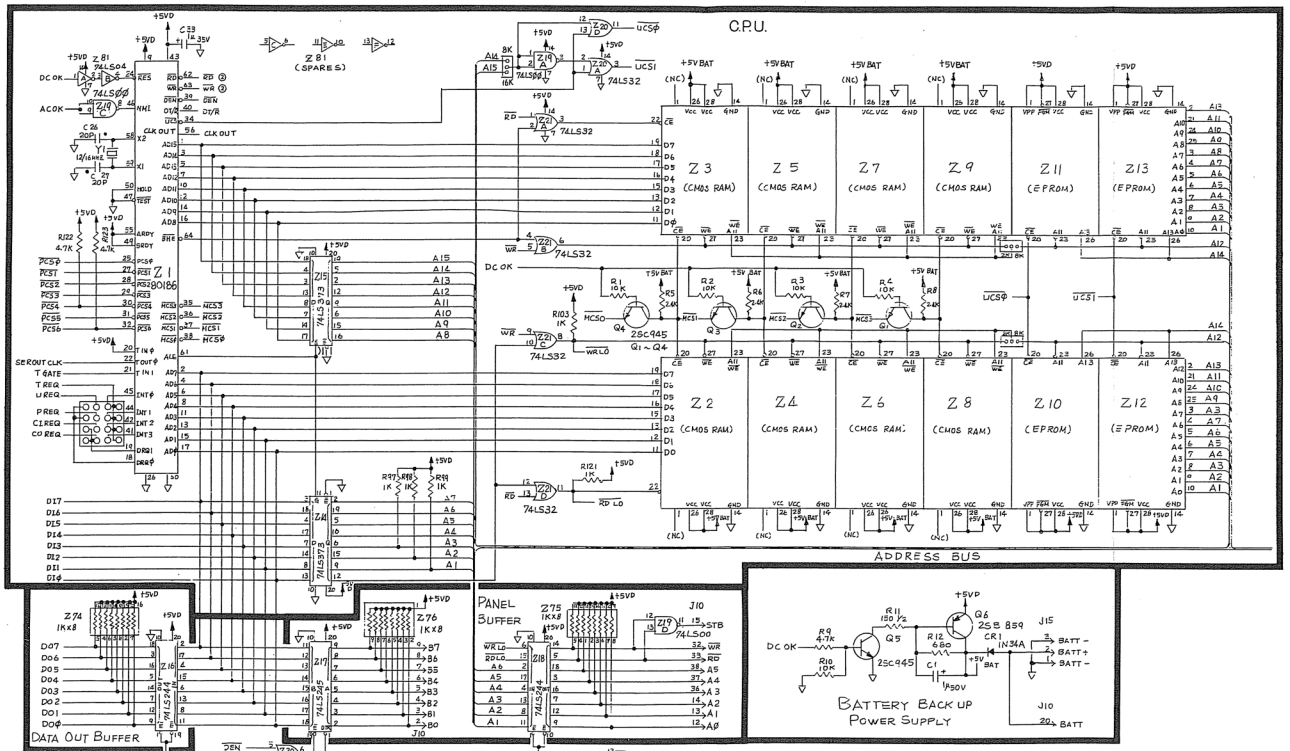

NOTES:

1. UNLESS OTHERWISE SPECIFIED:
   ALL RESISTOR VALUES ARE IN OHMS ¼W 5%
   ALL CAPACITOR VALUES ARE IN MICROFARADS (P: PICOFARADS)
   ALL DIODES ARE IN4148

• CERAMIC CAPACITOR

EACH IC HAS A BYPASS CAPACITOR. (0.1 ±20% MULTI-PLY CERAMIC CAPACITOR)
PARTS NUMBER IS SHOWN FOLLOWS.

C8□ — IC NUMBER

EXAMPLE : IN CASE OF Z14 → C814

FENDER MI CHROMA POLARIS

COMPUTER, MEMORY, DATA & PANEL BUFFERS, BAT. BACK-UP

Fig. 9-7