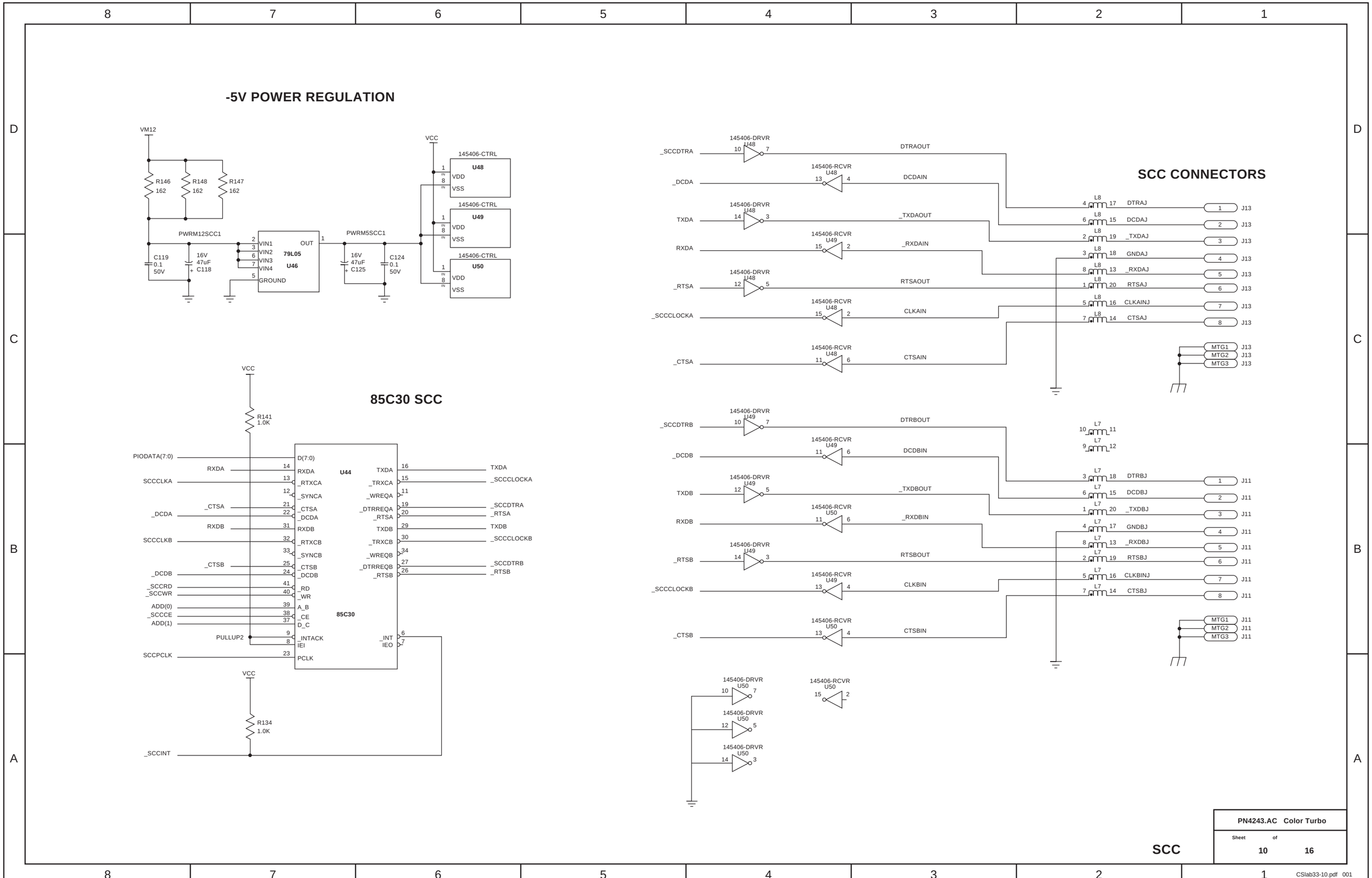
-5V POWER REGULATION
VM12
R146 162
R148 162
R147 162
PWRM12SCC1
C119 0.1 50V
16V 47uF C118
VIN1
VIN2
VIN3
VIN4
OUT
79L05
U46
GROUND
PWRM5SCC1
16V 47uF C125
C124 0.1 50V
VCC
145406-CTRL
U48
U49
U50
VDD
VSS
85C30 SCC
R141 1.0K
R134 1.0K
PIODATA(7:0)
RXDA
SCCCLKA
_CTSA
_DCDA
RXDB
SCCCLKB
_CTSB
_DCDB
_SCCRD
_SCCWR
ADD(0)
_SCCCE
ADD(1)
PULLUP2
SCCPCLK
_SCCINT
D(7:0)
_RTXCA
_SYNCA
_RTXCB
_SYNCB
_RD
_WR
A_B
_CE
D_C
_INTACK
IEI
PCLK
U44
85C30
TXDA
_TRXCA
_WREQA
_DTRREQA
_RTSA
TXDB
_TRXCB
_WREQB
_DTRREQB
_RTSB
_INT
IEO
_SCCCLOCKA
_SCCDTRA
_SCCDTRB
_SCCCLOCKB
SCC CONNECTORS
145406-DRVR
145406-RCVR
_SCCDTRA
_DCDA
TXDA
RXDA
_RTSA
_SCCCLOCKA
_CTSA
DTRAOUT
DCDAIN
_TXDAOUT
_RXDAIN
RTSAOUT
CLKAIN
CTSAIN
_SCCDTRB
_DCDB
TXDB
RXDB
_RTSB
_SCCCLOCKB
_CTSB
DTRBOUT
DCDBIN
_TXDBOUT
_RXDBIN
RTSBOUT
CLKBIN
CTSBIN
L8
L7
DTRAJ
DCDAJ
_TXDAJ
GNDAJ
_RXDAJ
RTSAJ
CLKAINJ
CTSAJ
DTRBJ
DCDBJ
_TXDBJ
GNDBJ
_RXDBJ
RTSBJ
CLKBINJ
CTSBJ
J13
J11
MTG1
MTG2
MTG3
PN4243.AC Color Turbo
Sheet 10 of 16
SCC
CSlab33-10.pdf 001