ATTACHMENT

Procedure to upgrade Rev D ExpandoRAM II boards to 256Kbyte capacity.

To use the ExpandoRAM II board with the 64K-bit IC's in an SD-OS environment, the following modifications to the board must be made:

1. Cut the etch between E17 and E16.
2. Cut the etch between E1 and E2.
3. Cut the etch between E4 and E5.
4. Cut the etch between E6 and E8.
5. Install a jumper between E17 and E18.
6. Install a jumper between E2 and E3.
7. Install a jumper between E6 and E7.
8. Remove all of the filter capacitors connected to pin 9 of the RAM chips (quantity 8, C57 thru C64). Unsoldering is recommended.
9. Install the new PROM (EX64-48) at location U8.

To use a COSMOS system with 48K byte partitions and with more than 4 users on the RAM II with 64K chips, the following additional mods must be made:

1. Cut the etch connected to pin 32 of the S-100 bus connector.
2. Cut the etch connected from pin 11 of U24 to pin 13 of U18.
3. Remove jumper installed in step 5 above.
4. Install a 74LS32 IC close to or under location U18.
5. Hook pin 14 of the 74SL32 to pin 14 of U18.
6. Hook pin 7 of the 74LS32 to pin 7 of U18.
7. Hook pin 1 of the 74LS32 to pin 1 of U18.
8. Hook pin 13 of the 74LS32 to pin 13 of U18.
9. Hook pin 2 of the 74LS32 to pin 12 of the 74LS32.

ATTACHMENT - (Continued)

10. Hook pin 32 of the S100 bus to pin 13 of the 74LS32.
11. Hook pin 2 of the 74LS32 to pin 7 of U13.
12. Hook pin 3 of the 74LS32 to pin 4 of U24.
13. Hook pin 11 of the 74LS32 to pin 11 of U24.

82S130-F,N • 82S131-F,N

DESCRIPTION

The 82S130 and 82S131 are field programmable, which means that custom patterns are immediately available by following the fusing procedure given in this data sheet. The standard 82S130 and 82S131 are supplied with all outputs at logical low. Outputs are programmed to a logic high level at any specified address by fusing a Ni-Cr link matrix.

These devices include on-chip decoding and 1 chip enable input for ease of memory expansion. They feature either open collector or tri-state outputs for optimization of word expansion in bused organizations.

Both 82S130 and 82S131 devices are available in the commercial and military temperature ranges. For the commercial temperature range (0° to +75°C) specify N82S130/131, F or N, and for the military temperature range (-55°C to +125°C) specify S82S130/131, F.

FEATURES

- Address access time:
  - N82S130/131: 50ns max
  - S82S130/131: 70ns max
- Power dissipation: 0.3mW/bit typ
- Input loading:
  - N82S130/131: -100μA max
  - S82S130/131: -150μA max
- On-chip address decoding
- Output options:
  - 82S130: Open collector
  - 82S131: Tri-state
- No separate fusing pins
- Unprogrammed outputs are low level
- Fully TTL compatible

APPLICATIONS

- Prototyping/volume production
- Sequential controllers
- Microprogramming
- Hardwired algorithms
- Control store
- Random logic
- Code conversion

PIN CONFIGURATION

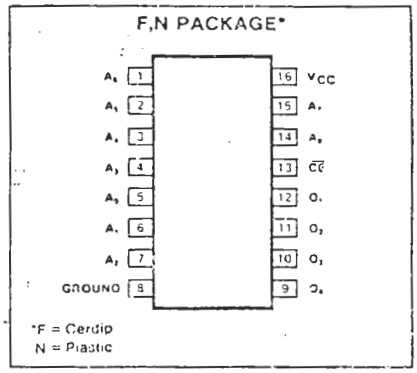

BLOCK DIAGRAM

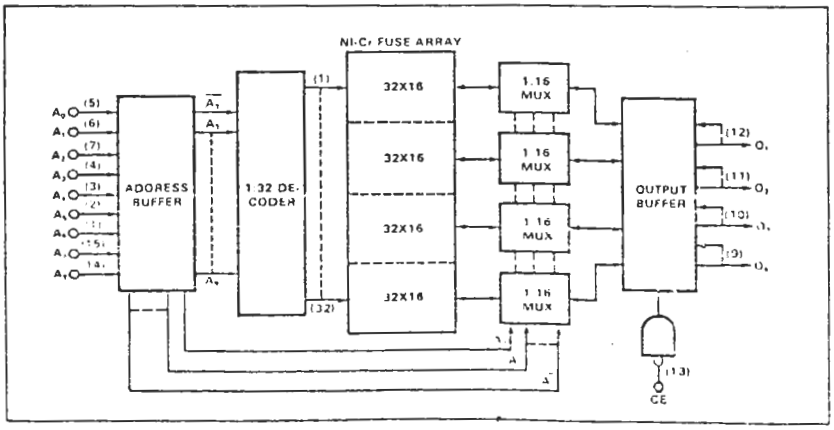

ABSOLUTE MAXIMUM RATINGS

	PARAMETER	RATING	UNIT
V_{CC}	Supply voltage	+7	Vdc
V_{IN}	Input voltage	+5.5	Vdc
	Output voltage		Vdc
V_{OH}	High (82S130)	+5.5	
V_O	Off-state (82S131)	+5.5	
	Temperature range		°C
T_A	Operating		
	N82S130/131	0 to +75	
	S82S130/131	-55 to +125	
T_{STG}	Storage	-65 to +150	

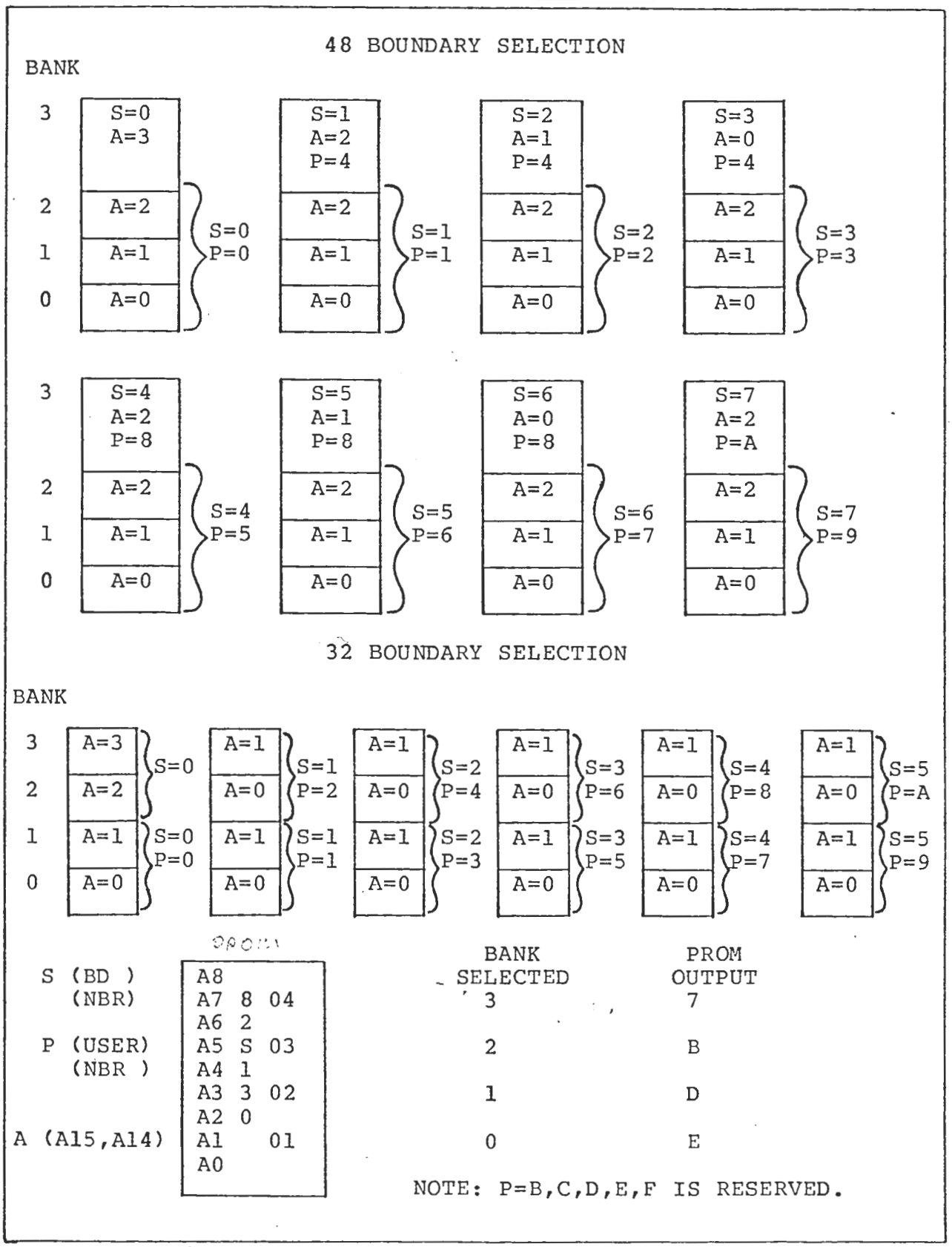

Figure 2-4. PROM Program and Page Mapping.

INTEL PROMs FROM HAMILTON/AVNET

LSB (ADDRESS) = PIN_____

LSB (OUTPUT) = PIN_____

48K BOUNDARIES

STANDARD MEMORY TRUTH TABLE

INSTRUCTIONS

The "Standard Memory Truth Table" is designed to accommodate word sizes ranging from 1 to 8 bits per word. Any number of words can be specified simply by using additional forms and providing the proper information in the Memory Organization. (For additional protection from errors the proper word number should be written in the margin to the left of the printed word number for each added page.)

The layout of each section provides a convenient means for converting the truth table to a punched card format. By rotating form 90° CCW, each section will correspond to the first 64 columns of an 80 column card, where row 0 corresponds to column B0, row 1 to column B1, etc. In using this format specify a program, simply punch the appropriate row and column for each logical "1" in the rotated truth table. (Keep in mind that column 1 on the card corresponds to word 0 on the form, column 2 to word 1, etc.)

For purposes of standardization, the definitions of Logical "1's" and "0's" are as follows:

"1" = H = P = (Relatively more positive voltage.)

"0" = L = N = (Relatively less positive voltage.)

If further information is needed, contact your nearest Hamilton/Avnet location, or TWX 910-340-7080.

WORD NO.	SECTION A DATA								CARD PUNCH
	S	P	A	DATA	4 B3	3 B2	2 B1	1 B0	
0	0	0	0	7	0	1	1	1	1
1	0	0	1	7	0	1	1	1	2
2	0	0	2	3	1	0	1	1	3
3	0	0	3	B	1	0	1	1	4
4	0	0	4	D	1	1	0	1	5
5	0	0	5	D	1	1	0	1	6
6	0	0	6	E	1	1	1	0	7
7	0	0	7	E	1	1	1	0	8
8	0	1	0	7	0	1	1	1	9
9	0	1	1	7	0	1	1	1	10
10	0	1	2	F	1	1	1	1	11
11	0	1	3	F					12
12	0	1	4	F					13
13	0	1	5	F					14
14	0	1	6	F					15
15	0	1	7	F	1	1	1	1	16
16	0	2	0	7	0	1	1	1	17
17	0	2	1	7	0	1	1	1	18
18	0	2	2	F	1	1	1	1	19
19	0	2	3	F					20
20	0	2	4	F					21
21	0	2	5	F					22
22	0	2	6	F					23
23	0	2	7	F	1	1	1	1	24
24	0	3	0	7	0	1	1	1	25
25	0	3	1	7	0	1	1	1	26
26	0	3	2	F	1	1	1	1	27
27	0	3	3	F					28
28	0	3	4	F					29
29	0	3	5	F					30
30	0	3	6	F					31
31	0	3	7	F	1	1	1	1	32
32	0	4	0	7	0	1	1	1	33
33	0	4	1	7	0	1	1	1	34
34	0	4	2	F	1	1	1	1	35
35	0	4	3	F					36
36	0	4	4	F					37
37	0	4	5	F					38
38	0	4	6	F					39
39	0	4	7	F	1	1	1	1	40
40	0	5	0	7	0	1	1	1	41
41	0	5	1	7	0	1	1	1	42
42	0	5	2	F	1	1	1	1	43
43	0	5	3	F					44
44	0	5	4	F					45
45	0	5	5	F					46
46	0	5	6	F					47
47	0	5	7	F	1	1	1	1	48
48	0	6	0	7	0	1	1	1	49
49	0	6	1	7	0	1	1	1	50
50	0	6	2	F	1	1	1	1	51
51	0	6	3	F					52
52	0	6	4	F					53
53	0	6	5	F					54
54	0	6	6	F					55
55	0	6	7	F	1	1	1	1	56
56	0	7	0	7	0	1	1	1	57
57	0	7	1	7	0	1	1	1	58
58	0	7	2	F	1	1	1	1	59
59	0	7	3	F					60
60	0	7	4	F					61
61	0	7	5	F					62
62	0	7	6	F					63
63	0	7	7	F					64

WORD NO.	SECTION B DATA								CARD PUNCH
	S	P	A	DATA	4 B3	3 B2	2 B1	1 B0	
64	1	0	0	F	1	1	1	1	1
65	1	0	1	F					2
66	1	0	2	F					3
67	1	0	3	F					4
68	1	0	4	F					5
69	1	0	5	F					6
70	1	0	6	F					7
71	1	0	7	F					8
72	1	1	0	F					9
73	1	1	1	F	1	1	1	1	10
74	1	1	2	F	1	1	1	1	11
75	1	1	3	F	1	1	1	1	12
76	1	1	4	F	1	1	1	1	13
77	1	1	5	F	1	1	1	1	14
78	1	1	6	F	1	1	1	1	15
79	1	1	7	F	1	1	1	1	16
80	1	2	0	F	1	1	1	1	17
81	1	2	1	F					18
82	1	2	2	F					19
83	1	2	3	F					20
84	1	2	4	F					21
85	1	2	5	F					22
86	1	2	6	F					23
87	1	2	7	F					24
88	1	3	0	F					25
89	1	3	1	F					26
90	1	3	2	F					27
91	1	3	3	F					28
92	1	3	4	F					29
93	1	3	5	F					30
94	1	3	6	F					31
95	1	3	7	F					32
96	1	4	0	F					33
97	1	4	1	F					34
98	1	4	2	F					35
99	1	4	3	F					36
100	1	4	4	F					37
101	1	4	5	F	1	1	1	1	38
102	1	4	6	7	0	1	1	1	39
103	1	4	7	7	0	1	1	1	40
104	1	5	0	F	1	1	1	1	41
105	1	5	1	F					42
106	1	5	2	F					43
107	1	5	3	F					44
108	1	5	4	F					45
109	1	5	5	F					46
110	1	5	6	F					47
111	1	5	7	F					48
112	1	6	0	F					49
113	1	6	1	F					50
114	1	6	2	F					51
115	1	6	3	F					52
116	1	6	4	F					53
117	1	6	5	F					54
118	1	6	6	F					55
119	1	6	7	F					56
120	1	7	0	F					57
121	1	7	1	F					58
122	1	7	2	F					59
123	1	7	3	F					60
124	1	7	4	F					61
125	1	7	5	F					62
126	1	7	6	F					63
127	1	7	7	F					64

LSB (ADDRESS) = PIN_____

LSB (OUTPUT) = PIN_____

STANDARD MEMORY TRUTH TABLE

BUYER'S NAME_____PHONE_____

PROGRAMMERS NAME_____

PURCHASE ORDER NO._____

MANUFACTURER'S PART NO._____

SPECIAL MARKING (IF ANY)_____

CUSTOMER NAME_____

CUSTOMER PART NO._____REV._____

MEMORY ORGANIZATION:

WORDS_____AND_____BITS/WORD

WORDS_____THRU_____SPECIFIED ON THIS PAGE

WORD NO.	SECTION A DATA								CARD PUNCH
	S	P	A	DATA	4 B3	3 B2	2 B1	1 B0	
128	2	0	0	F	1	1	1	1	1 2 3 4 5 6 7 8 9 10 11 12 13 14 15 16 17 18 19 20 21 22 23 24 25 26 27 28 29 30 31 32 33 34 35 36 37 38 39 40 41 42 43 44 45 46 47 48 49 50 51 52 53 54 55 56 57 58 59 60 61 62 63 64
129	2	0	1	F					
130	2	0	2	F					
131	2	0	3	F					
132	2	0	4	F					
133	2	0	5	F					
134	2	0	6	F					
135	2	0	7	F					
136	2	1	0	F					
137	2	1	1	F					
138	2	1	2	F					
139	2	1	3	F					
140	2	1	4	F					
141	2	1	5	F					
142	2	1	6	F					
143	2	1	7	F					
144	2	2	0	F					
145	2	2	1	F	1	0	1	1	
146	2	2	2	B	1	0	1	1	
147	2	2	3	B	1	0	1	1	
148	2	2	4	D	1	1	0	1	
149	2	2	5	D	1	1	0	1	
150	2	2	6	E	1	1	1	0	
151	2	2	7	E	1	1	1	0	
152	2	3	0	F	1	1	1	1	
153	2	3	1	F					
154	2	3	2	F					
155	2	3	3	E					
156	2	3	4	F					
157	2	3	5	F					
158	2	3	6	F					
159	2	3	7	F					
160	2	4	0	F					
161	2	4	1	F	1	1	1	1	
162	2	4	2	7	0	1	1	1	
163	2	4	3	7	0	1	1	1	
164	2	4	4	E	1	1	1	1	
165	2	4	5	F					
166	2	4	6	F					
167	2	4	7	F					
168	2	5	0	F					
169	2	5	1	F					
170	2	5	2	F					
171	2	5	3	F					
172	2	5	4	F					
173	2	5	5	F					
174	2	5	6	F					
175	2	5	7	F					
176	2	6	0	F					
177	2	6	1	F					
178	2	6	2	F					
179	2	6	3	F					
180	2	6	4	F					
181	2	6	5	F					
182	2	6	6	F					
183	2	6	7	F					
184	2	7	0	F					
185	2	7	1	F					
186	2	7	2	F					
187	2	7	3	F					
188	2	7	4	F					
189	2	7	5	F					
190	2	7	6	F					
191	2	7	7	F					

WORD NO.	SECTION B DATA								CARD PUNCH
	S	P	A	DATA	4 B3	3 B2	2 B1	1 B0	
192	3	0	0	F	1	1	1	1	1 2 3 4 5 6 7 8 9 10 11 12 13 14 15 16 17 18 19 20 21 22 23 24 25 26 27 28 29 30 31 32 33 34 35 36 37 38 39 40 41 42 43 44 45 46 47 48 49 50 51 52 53 54 55 56 57 58 59 60 61 62 63 64
193	3	0	1	F					
194	3	0	2	F					
195	3	0	3	F					
196	3	0	4	F					
197	3	0	5	F					
198	3	0	6	F					
199	3	0	7	F					
200	3	1	0	F					
201	3	1	1	F					
202	3	1	2	F					
203	3	1	3	F					
204	3	1	4	F					
205	3	1	5	F					
206	3	1	6	F					
207	3	1	7	F					
208	3	2	0	F					
209	3	2	1	F					
210	3	2	2	F					
211	3	2	3	F					
212	3	2	4	F					
213	3	2	5	F					
214	3	2	6	F					
215	3	2	7	F					
216	3	3	0	F					
217	3	3	1	F	1	1	1	1	
218	3	3	2	F	1	0	1	1	
219	3	3	3	F	1	0	1	1	
220	3	3	4	D	1	1	0	1	
221	3	3	5	D	1	1	0	1	
222	3	3	6	E	1	1	1	0	
223	3	3	7	E	1	1	1	0	
224	3	4	0	F	1	1	1	1	
225	3	4	1	F	1	1	1	1	
226	3	4	2	F	1	1	1	1	
227	3	4	3	F	1	1	1	1	
228	3	4	4	7	0	1	1	1	
229	3	4	5	7	0	1	1	1	
230	3	4	6	E	1	1	1	1	
231	3	4	7	F					
232	3	5	0	F					
233	3	5	1	F					
234	3	5	2	F					
235	3	5	3	F					
236	3	5	4	F					
237	3	5	5	F					
238	3	5	6	F					
239	3	5	7	F					
240	3	6	0	F					
241	3	6	1	F					
242	3	6	2	F					
243	3	6	3	F					
244	3	6	4	F					
245	3	6	5	F					
246	3	6	6	F					
247	3	6	7	F					
248	3	7	0	F					
249	3	7	1	F					
250	3	7	2	F					
251	3	7	3	F					
252	3	7	4	F					
253	3	7	5	F					
254	3	7	6	F					
255	3	7	7	F					

INTEL PROMs FROM HAMILTON/AVNET

LSB (ADDRESS) = PIN_____

LSB (OUTPUT) = PIN_____

STANDARD MEMORY TRUTH TABLE

INSTRUCTIONS

The "Standard Memory Truth Table" is designed to accommodate word sizes ranging from 1 to 8 bits per word. Any number of words can be specified simply by using additional forms and providing the proper information in the Memory Organization. (For additional protection from errors the proper word number should be written in the margin to the left of the printed word number for each added page.)

The layout of each section provides a convenient means for converting the truth table to a punched card format. By rotating form 90° CCW, each section will correspond to the first 64 columns of an 80 column card, where row 0 corresponds to column B0, row 1 to column B1, etc. In using this format specify a program, simply punch the appropriate row and column for each logical "1" in the rotated truth table. (Keep in mind that column 1 on the card corresponds to word 0 on the form, column 2 to word 1, etc.)

For purposes of standardization, the definitions of Logical "1's" and "0's" are as follows:

"1" = H = P = (Relatively more positive voltage.)

"0" = L = N = (Relatively less positive voltage.)

If further information is needed, contact your nearest Hamilton/Avnet location, or TWX 910-340-7080.

WORD NO.	SECTION A DATA								CARD PUNCH
	S	P	A	DATA	4 B3	3 B2	2 B1	1 B0	
256	4	0	0	F	1	1	1	1	1 2 3 4 5 6 7 8 9 10 11 12 13 14 15 16 17 18 19 20 21 22 23 24 25 26 27 28 29 30 31 32 33 34 35 36 37 38 39 40 41 42 43 44 45 46 47 48 49 50 51 52 53 54 55 56 57 58 59 60 61 62 63 64
257	4	0	1	E					
258	4	0	2	F					
259	4	0	3	E					
260	4	0	4	F					
261	4	0	5	F					
262	4	0	6	F					
263	4	0	7	E					
264	4	1	0	F					
265	4	1	1	E					
266	4	1	2	F					
267	4	1	3	F					
268	4	1	4	E					
269	4	1	5	F					
270	4	1	6	F					
271	4	1	7	E					
272	4	2	0	E					
273	4	2	1	F					
274	4	2	2	E					
275	4	2	3	E					
276	4	2	4	E					
277	4	2	5	F					
278	4	2	6	E					
279	4	2	7	E					
280	4	3	0	E					
281	4	3	1	F					
282	4	3	2	E					
283	4	3	3	E					
284	4	3	4	E					
285	4	3	5	F					
286	4	3	6	E					
287	4	3	7	E					
288	4	4	0	E					
289	4	4	1	E					
290	4	4	2	E					
291	4	4	3	E					
292	4	4	4	E					
293	4	4	5	E					
294	4	4	6	E					
295	4	4	7	E					
296	4	5	0	E					
297	4	5	1	E	1	1	1	1	
298	4	5	2	E	1	0	1	1	
299	4	5	3	E	1	0	1	1	
300	4	5	4	E	1	1	0	1	
301	4	5	5	E	1	1	0	1	
302	4	5	6	E	1	1	1	0	
303	4	5	7	E	1	1	1	0	
304	4	6	0	E	1	1	1	1	
305	4	6	1	E					
306	4	6	2	E					
307	4	6	3	E					
308	4	6	4	E					
309	4	6	5	E					
310	4	6	6	E					
311	4	6	7	E					
312	4	7	0	E					
313	4	7	1	E					
314	4	7	2	E					
315	4	7	3	E					
316	4	7	4	E					
317	4	7	5	E					
318	4	7	6	E					
319	4	7	7	E			1	1	

WORD NO.	SECTION B DATA								CARD PUNCH
	S	P	A	DATA	4 B3	3 B2	2 B1	1 B0	
320	5	0	0	F			1	1	1 2 3 4 5 6 7 8 9 10 11 12 13 14 15 16 17 18 19 20 21 22 23 24 25 26 27 28 29 30 31 32 33 34 35 36 37 38 39 40 41 42 43 44 45 46 47 48 49 50 51 52 53 54 55 56 57 58 59 60 61 62 63 64
321	5	0	1	F					
322	5	0	2	F					
323	5	0	3	F					
324	5	0	4	F					
325	5	0	5	F					
326	5	0	6	E					
327	5	0	7	E					
328	5	1	0	E					
329	5	1	1	F					
330	5	1	2	E					
331	5	1	3	E					
332	5	1	4	F					
333	5	1	5	E					
334	5	1	6	F					
335	5	1	7	E					
336	5	2	0	F					
337	5	2	1	F					
338	5	2	2	E					
339	5	2	3	E					
340	5	2	4	E					
341	5	2	5	E					
342	5	2	6	E					
343	5	2	7	E					
344	5	3	0	E					
345	5	3	1	E					
346	5	3	2	E					
347	5	3	3	E					
348	5	3	4	E					
349	5	3	5	E					
350	5	3	6	E					
351	5	3	7	E					
352	5	4	0	E					
353	5	4	1	E					
354	5	4	2	E					
355	5	4	3	E					
356	5	4	4	E					
357	5	4	5	E					
358	5	4	6	E					
359	5	4	7	E					
360	5	5	0	E					
361	5	5	1	E					
362	5	5	2	E					
363	5	5	3	E					
364	5	5	4	E					
365	5	5	5	E					
366	5	5	6	E					
367	5	5	7	E					
368	5	6	0	E					
369	5	6	1	F	1	1	1	1	
370	5	6	2	B	1	0	1	1	
371	5	6	3	B	1	0	1	1	
372	5	6	4	D	1	1	0	1	
373	5	6	5	D	1	1	0	1	
374	5	6	6	E	1	1	1	0	
375	5	6	7	E	1	1	1	0	
376	5	7	0	E	1	1	1	1	
377	5	7	1	F					
378	5	7	2	F					
379	5	7	3	F					
380	5	7	4	F					
381	5	7	5	F					
382	5	7	6	F					
383	5	7	7	F	1	1	1		

64 K RAMS

	Power (TYP)			Current (MAX)		
	OPER	STANDBY		Mgncy.	Rfshcy	STNDBY
* TI 4164	125 mW (~~Typ~~)	17.5 mw (~~Typ~~)		37 ma	32 ma	5 ma
			64K SYS	296 ma	256 ma	40 ma
			256 KSYS	1184 ma	1024 ma	160 ma
MOSTEK 4564	300 mw	22 mw		54 ma	45 ma	4 ma
			64KSYS	432 ma	360 ma	32 ma
			256KSYS	1728 ma	1440 ma	128 ma
MOSTEK 4164	330 mw	22 mw		60 ma		4
			64ksys	480 ma		32 m
			256ksys	1920 ma		128 ma
* Hitachi 4864	330 mw	20 mw		60 ma	4.5 ma	3.5 m
			64ksys	480 ma	36 ma	28 ma
			256ksys	1920 ma	144 ma	112 ma
NATIONAL NMC 4164	250 mw			45 ma	35 ma	4 ma
			64Ksys	360 ma	280 ma	32 ma
			256Ksys	1440 ma	1120 ma	128 ma

* MCM6665L20

* IEC 4164D

OKI

284 mW/CHIP @ 5V
PERROTT ASSOC IN ORLANDO 275-1132 1607 FORSYTH