BEEHIVE'S B100

The B100 Operator's Manual

SECTION I

Introduction

- *Cursor Control*
- *Erase Mode*
- *Addressable Cursor*
- *Switch Selectable Transmission Rates: 75 to 19,200 bps*
- *Communication Mode: HDX/FDX**
- *Auxiliary Interface Printer Interface or Storage Media I/O*
- *Non-Glare Screen*

The BEEHIVE B100 is a low cost multi-feature remote video display terminal. The terminal is self-contained, operator oriented, and computer accessible. The BEEHIVE B100 is an attractively styled sophisticated electronic package designed for use in serially transmitting information to and receiving information from, an interconnected data source. The terminal is fast, with an operational exchange of data at any of several preselected transmission rates — 75 to 19,200 baud. Other features include cursor control, RS-232C and current loop interface, addressable cursor, and erase mode. Expansion options, such as formatting, hard copy capability with printer interface, editing, blink, and 16 function keys are available.

The BEEHIVE B100 is controlled by an operator designed keyboard employing N-Key rollover feature. When a key is held down for longer than half a second, it automatically repeats at a rate of 15 characters per second. Auto repeat on some keys is inhibited where not meaningful. Keyboard features include an eleven key numeric pad for convenient entering of numbers; cursor up, down, right and left controls; optional function keys and edit and data transmit keys.

Interfacing, baud rate selection, half and full duplex* switching, and video controls, are conveniently arranged on the rear panel. The Input/Output and auxiliary I/O connectors will interact with most standard serial RS-232C external devices. The auxiliary data can be received and transmitted at a baud rate separate from that of the standard I/O Port and is strap selectable.

The CRT is a 12-inch/30.5 cm (measured diagonally) digital-type monitor which is formatted to display 12 lines with 80 characters on each line for a total page memory of 960 characters. A 24x80 character option provides a total of 1,920 character memory for additional text storage. Each character is generated from a 5 x 7 dot matrix, with two dot spacing between adjoining characters and a two scan spacing between adjacent lines. The standard character set consists of 64 displayable characters where optionally there are 96 characters consisting of upper and lower case.

This manual provides a general equipment description and operating instruction for the BEEHIVE B100 VIDEO TERMINAL. Included are sufficient diagrams, tables, and descriptive text to provide information to obtain a thorough understanding of the operational characteristics of the equipment.

A brief equipment description/option list, installation with setup procedures, and operating instructions are included in three general sections.

* Full Duplex operation allows data to be transmitted with the terminal's receiver input enabled for immediate computer reply of the transmitted data (echoplexed) to verify proper receipt of the data.

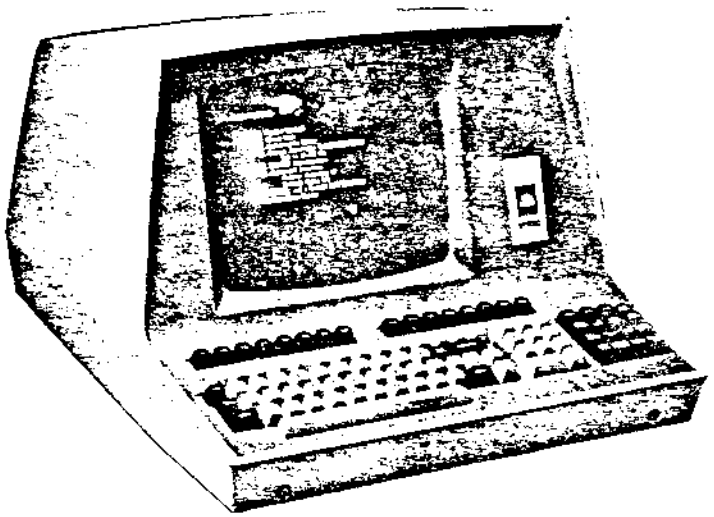

Figure 1-1 The BEEHIVE B100 TERMINAL

Table 1-2 BEEHIVE B100 Specifications

1. PHYSICAL CHARACTERISTICS		
Width	19.00 inches	38.3 cm
Height	13.50 inches	34.3 cm
Depth	22.25 inches	56.5 cm
Weight	45 pounds	20.41 kg
2. POWER REQUIREMENTS		
Input Voltage	110/100V/200V/230 VAC ± 10%, 50/60 Hz	
Power Consumption	100 Watts (nominal)	
3. ENVIRONMENTAL SPECIFICATIONS		
Altitude	Sea Level to 10,000 ft. (3 km)	
Temperature	0 to +40 degrees C (+32 to 104 deg F)	
Humidity	5% to 90% non-condensing	
Vibration	10 Hz to 55 Hz, 0.01 inch peak-to-peak	
Non-operative Storage Temp.	−20°C to 85°C	
4. GENERAL SPECIFICATION		
Display Size	12 inch diagonal (rectangular) (30.5 cm)	
Active Display Size	6.5 x 8.4 inches (16.6 cm x 21.4 cm)	
Display Format	12 lines of 80 characters each	
Character Type	5 x 7 dot matrix (7 x 9 field)	
Character Set	64 character ASCII set	
	96 character ASCII optional	

Table 1-2 BEEHIVE B100 Specifications Cont'd.

Cursor Type	Non-destructive block
Erase Functions	Clear Memory Erase to end of line Erase to end of screen Erase unprotected field in Format Mode
Operation Modes	HDX/FDX/BLOCK
	9, 10, or 11 bit words
Strapping Options	Printer Baud rate Refresh Rate (50/60 Hz) Parity Odd/Even 9, 10, or 11 Bit Word Parity Bit Mark/Space Aux Port CR/LF Delay Enable Aux Port Ready/Busy Control
Communications	Per RS-232C EIA Standard 20 ma Current Loop Adapter
Signal Characteristics	
Transmit Mark	−10 volts nominal
Transmit Space	+10 volts nominal
Receive Mark	−3 to −25 volts
Receive Space	+3 to +25 volts
Transmission Rates	75, 110, 150, 300, 600, 1000, 1200, 1800, 2000, 2400, 3600, 4800, 7200, 9600, 19200, or an externally provided clock (X16) X8 TTL output also provided

Figure 1-2 KEYBOARD CONFIGURATION

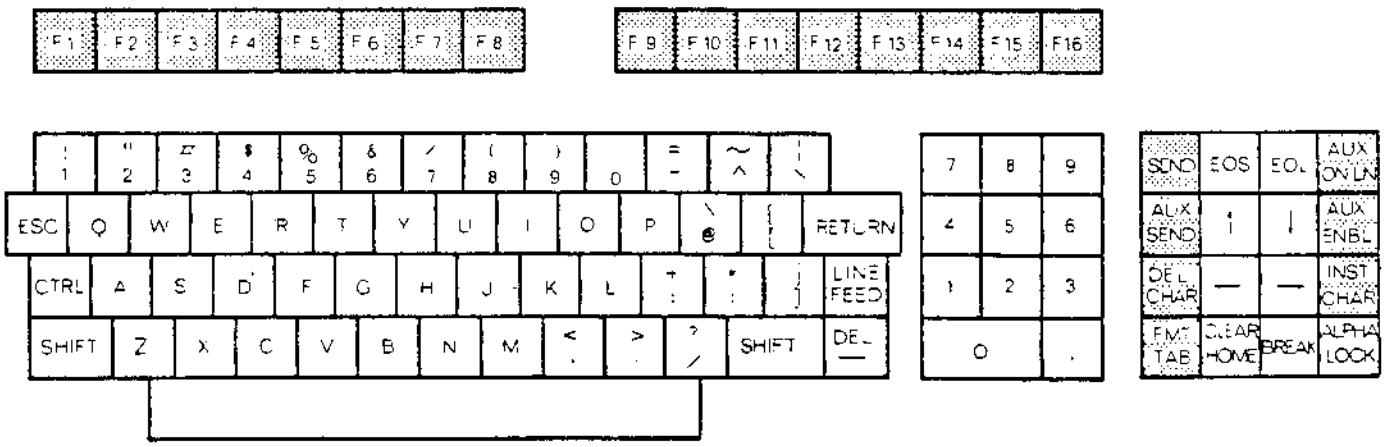

Shaded Areas Denote Optional Keys

Table 1-2 BEEHIVE B100 Specifications (cont'd)

Transmission Code	
Start Bit	one Bit
Data Bits	seven Bits USASCII
Parity Bit	one Bit or none
Stop Bit	one or two Bits
Baud Selection	
Main I/O	Switch Selectable
Auxiliary	Internally strap selectable
Refresh Rate	50 or 60 Hz
Display Memory	MOS Random Access Memories
Character Generation	MOS Read Only Memory

OPTIONS LIST

CHARACTER GENERATOR

1. 96 Displayable Character Set

DISPLAY MEMORY

1. 24 Line x 80 characters

EDIT

1. Edit/Function Keys

MONITOR/FREQUENCY/VOLTAGE

1. 115V 50/60 Hz
2. 100V 50/60 Hz
3. 200V 50/60 Hz
4. 230V 50/60 Hz

SECTION II

Installation

2.1 INTRODUCTION

This section contains information on unpacking, receiving inspection, connection of the communications interface, physical placement of the terminal and preliminary functional control setting for the specific requirements of a given user.

2.2 UNPACKING

The following items are furnished with each B100 terminal:

a. The display terminal with keyboard.
b. Power Cord.
c. Operator's Manual

There are no tiedowns or packing materials inside the unit which need to be removed. Store the carton for use as a future shipping container.

2.3 INSPECTION FOR IN-SHIPMENT DAMAGE

Upon receipt, carefully check components for any signs of shipping damage. All shipping containers have been specially designed to protect their contents, and special care has been taken to prevent damage under normal shipping conditions. Mishandling will be evident upon inspection of the shipping container, and if damage is found after visual inspection, take care not to destroy the evidence. If necessary document the damage with photographs and contact the Transport Carrier as soon as possible.

2.4 THE BEE LINE

In a continuing effort to provide the best in support and service to terminal users, a one year subscription to a continuing information service is available. Service tips, manual updates and changes, corrective modifications and documentation, and recommended spare parts are only a few of the items this service provides. Please refer to the order form at the beginning of this manual for further information.

2.5 ACCESSORIES

The following accessories are available for use with the B100 terminal:

a. Acoustic Coupler Cable
Part No. 112-0031
b. NOVA* Computer Serial I/O Cable
Part No. 112-0040

* Trademark Data General Corp.

.6 IDENTIFICATION

.n identification plate located on the bottom cover f the terminal provides the model number, serial r ›er, weight, voltage and current requirements, -nu frequency and power classifications.

2.7 INSTALLATION

.7.1 Placement for Operation

The terminal is fully self-contained, and its portability llows it to be moved and relocated to alternate oper- :ting positions without removing or altering any wir- ing. Select a convenient, level surface and place the terminal where the power cable and data I/O cables vill not be in the way of the operator. Route the cables in such a manner that they not be inadvertent- ly pulled or disturbed by minor changes in terminal ›osition or by working personnel. Position the ter- minal so that operator use will be as convenient as possible.

> CAUTION: Do not place the terminal on any surface that will block cooling air from the bottom or back of the cabinet. The terminal is provided with an internal fan for cooling. Air enters through slots in the bottom and out slots provided in the rear of the terminal case. To maintain efficient air circulation, keep at least two inches of clearance at the rear and on the sides of the terminal (See Figure 2-1).

2.7.2 Power Connection

The terminal is shipped with a three-conductor power cord which grounds the instrument through the offset pin. The safety feature of this ground should always be preserved by grounding the terminal to the outlet box or other earth ground. If it is necessary to use an adapter, ground the pigtail.

2.7.3 Current Loop Interface

The Current Loop Interface is a 20ma device and can be used for computers up to 2000 feet (608 m) from the terminal. If shielded, twisted pairs are used, the terminal may be located up to 6000 feet (1.8 km) away if utilized at slower baud rates. Interface consists of:

2 wire source
2 wire receive data
2 wire xmit data

› current loop signals are contained within the ..-232C I/O connector and will not interfere with normal RS-232C signals required for asynchronous operation. See Table 2-1 for location of pin assignments.

NOTE: Current Loop will not operate above 9600 baud. Set the baud rate at 9600 or below.

2.7.4 Composite Video

The B100 is provided with a Composite Video device capabile of driving a remote monitor up to 1000 feet from the terminal over a 50-ohm coaxial cable. A BNC connector is provided on the rear of the terminal for this installation (See Figure 2-2).

2.7.5 Data Interface Connection

Signals used in communicating with the B100 conform to the requirements of EIA specification RS-232C. In particular, output voltage swings from −10 volts to +13 volts, while the receivers present a minimum of 3k ohms impedance to the line. The receiver circuits employed in B100 switch at approximately +1.0 volt with 0.1 volts of hysteresis. The input resistance is approximately 4k ohms. The driver circuits current limit is at 10 milliamps on both source and sink.

All data source interconnections are made via the rear panel Input/Output connector (refer to Figure 2-2). A 25 pin minature D-type ITT Cannon connector (DM-25S or equivalent) is used for connecting to the computer. Pin assignments are listed in Table 2-1 and defined in the following paragraphs.

2.8 DATA INTERFACE CONNECTIONS

All data source interconnections are made via the rear panel I/O connector (see Figure 2-2). The I/O connectors are RS-232C type. The pin connections are described in the following paragraphs and in Table 3-1.

2.8.1 Frame Ground (AA) Pin 1

This conductor, where used, is electrically bonded to the machine frame.

2.8.2 Transmitted Data (BA) Pin 2

This circuit transfers data from the terminal to the data set for transmission to the external device. The terminal holds circuit BA in the marked condition during any time interval between characters or words, or when no signals are to be transmitted.

2.8.3 Received Data (BB) Pin 3

The circuit transfers data from the data set to the terminal. Signals on this circuit are generated by the data set in response to data signals received from the

PIN NO.		SIGNAL DESCRIPTION	RS-232C
1		frame ground	AA
2		transmitted data	BA
3		received data	BB
4	OUT	request to send	CA
5	IN	clear to send	CB
7		signal ground	AB
8	IN	carrier detect	CF
16		X8 terminal data clock output	*
15		X16 terminal data clock input	*
20	OUT	data terminal ready	CD
17		trans	CL
18		source +20V (Current loop)	CL
19		GND	CL
23		receive GND	CL
24		trans GND	CL
25		receive	CL

*(Not RS-232C, TTL Level)

NOTE: CL is bipolar

DATA INTERFACE PIN ASSIGNMENTS (Main I/O Port)

PIN NO.		SIGNAL DESCRIPTION
1		frame ground
2	IN	aux receive data
3	OUT	aux send data
4	IN	aux request to send
5	OUT	aux clear to send
7		signal ground
6&8	IN	Data Set Ready – Carrier
20		aux ready/busy line

AUXILIARY PORT PIN ASSIGNMENTS

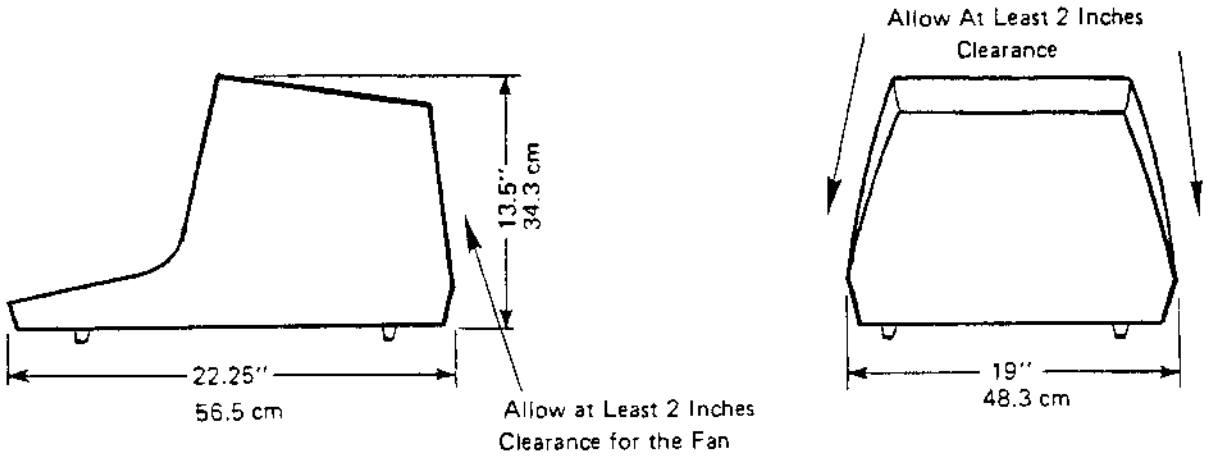

Figure 2-1 Mounting Requirements

external device. The data set holds this line in the marking condition when the line is idle.

2.8.4 Request to Send (CA) Pin 4

Signals on this circuit are generated by the terminal to condition the local data set to transmit. The "on" condition is maintained whenever the terminal has information ready for transmission or is being transmitted. The terminal transmits data on circuit BA (Transmitted Data) only when the "on" condition is maintained on circuits CA, CB, and CD. Request Send is determined internally. See the Strapping Option Table 2-2.

2.8.5 Clear to Send (CB) Pin 5

Signals on this circuit are generated by the data set to indicate that it is prepared to transmit data. The "on" condition on circuit CA (Request to Send) is replayed as long as may be required to establish a connection to an external device. When Circuit CA is turned off, circuit CB is also turned off.

2.8.6 Signal Ground (AB) Pin 7

This conductor establishes the common ground reference for all interface lines.

2.8.7 Carrier Detect (CF) Pin 8

An input signal (High) will enable the unit to receive.

2.8.8 X8 Terminal Data Clock Pin 16

X8 TTL level transmit clock is provided to clock external modem or interface units.

2.8.9 X16 Terminal Data CLock Pin 15

TTL level clock provided to B100 to slove terminal to any clock rate, up to 19,200 baud.

2.8.10 Data Terminal Ready (CD) Pin 20

Terminal ready is high whenever power is on.

2.8.11 Auxiliary Port Interface Connections

All Aux Port interconnections are made via the rear panel Aux Port connector (see Figure 2-2). Table 2-1 contains a list of pin assignments for the Aux Port connector.

2.8.12 Frame Ground Pin 1

This conductor, where used, is electrically grounded to the machine frame.

2.8.13 AUX Receive Data Pin 2

The circuit transfers data from the data set to the terminal. Signals on this circuit are generated by the data set in response to data signals received from the external device.

2.8.14 AUX Transmit Data Pin 3

This circuit transfers data from the terminal to the data set for transmission to the external device.

2.8.15 AUX Request to Send Pin 4

Signals on this circuit are generated by the terminal to condition the local data set to transmit.

2.8.16 AUX Clear to Send Pin 5

Signals on this circuit are generated by the data set to indicate that it is prepared to transmit data.

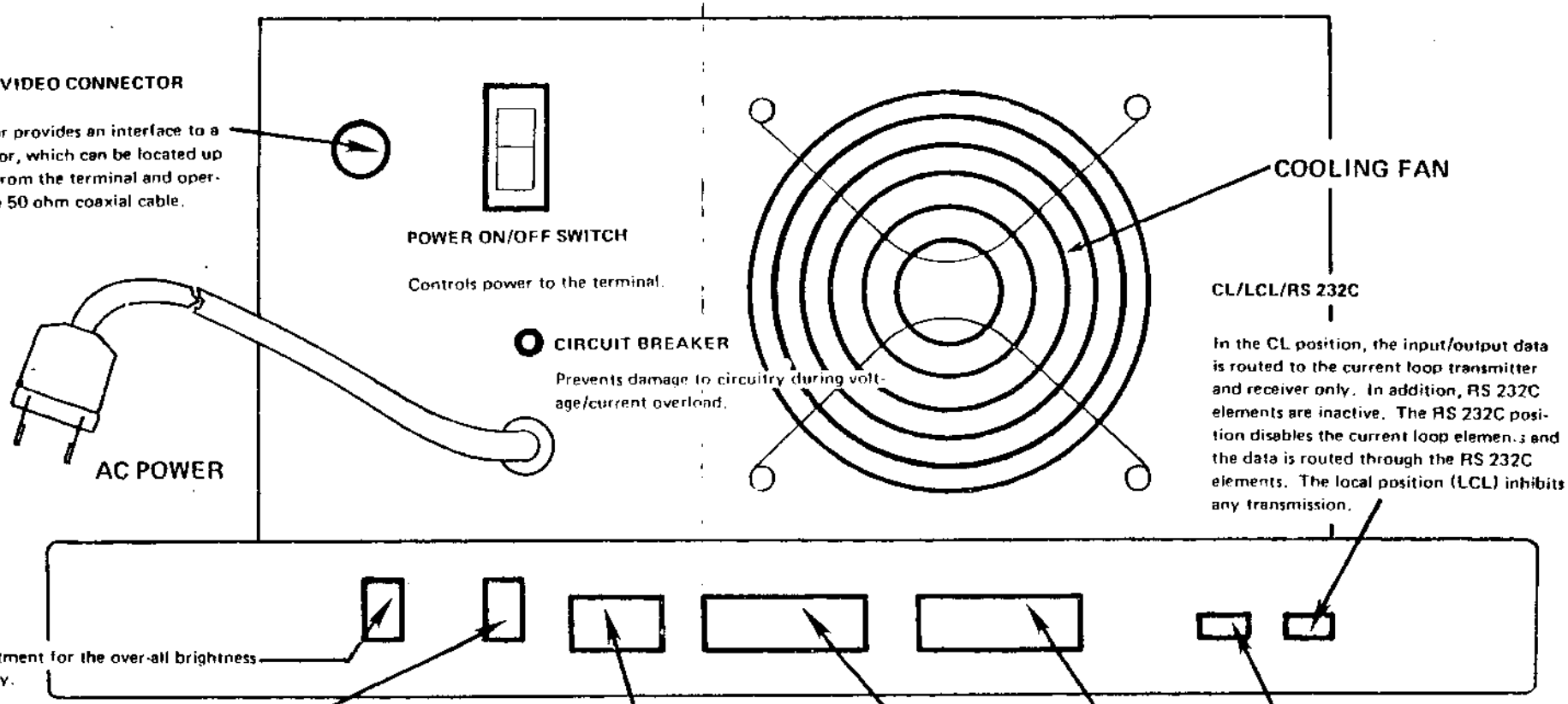

COMPOSITE VIDEO CONNECTOR

This connector provides an interface to a remote monitor, which can be located up to 1000 feet from the terminal and operates through a 50 ohm coaxial cable.

POWER ON/OFF SWITCH

Controls power to the terminal.

CIRCUIT BREAKER

Prevents damage to circuitry during voltage/current overload.

AC POWER

COOLING FAN

CL/LCL/RS 232C

In the CL position, the input/output data is routed to the current loop transmitter and receiver only. In addition, RS 232C elements are inactive. The RS 232C position disables the current loop elements and the data is routed through the RS 232C elements. The local position (LCL) inhibits any transmission.

BRIGHTNESS

Provides the adjustment for the over-all brightness of the video display.

CONTRAST

Provides the adjustment for the contrast level of the video display.

BAUD RATE SWITCH

This control selects the baud rate that the transmitter and receiver will utilize for transmission. There are 15 internal and 1 external baud rate selection.

BAUD RATE	SWITCH POSITION
75	0
110	1
150	2
300	3
600	4
1000	5
1200	6
1800	7
2000	8
2400	9
3600	10
4800	11
7200	12
9600	13
19200	14
X 16 clock	15

MAIN PORT

This port provides data source interface for the terminal, RS 232C or current loop interface.

AUXILIARY PORT

This connector provides an interface for peripheral device such as disks, printers, tape drives, etc.

HDX/BLOCK/FDX

Selects half-duplex, block mode, or full-duplex operation. In HDX operation data from the keyboard is displayed, stored in memory, and transmitted out the I/O port. In FDX operation, data is routed to the I/O port and not displayed or stored. In block mode, data is only stored and displayed in the terminal until the SEND or AUX SEND keys are depressed.

Figure 2-2 REAR PANEL VIEW OF THE TERMINAL B100

Table 2.2 SWITCH ASSIGNMENTS

SWITCH LOCATION A1

OPEN	SW No.	CLOSED (+)
UNUSED	1	UNUSED
LOW INTENSITY	2	LOW INTENSITY W/FORMAT
UNUSED	3 4	UNUSED
ONLY ONE CLOSED	5	INTERNAL AUX DELAY
	6	AUX BUSY CONTROL
	7	AUX READY CONTROL

SWITCH LOCATION D10

OPEN	SW No.	CLOSED (+)
MAIN 2 STOP	1	MAIN 1 STOP
MAIN NO PARITY	2	MAIN PARITY ENABLE
MAIN EVEN PARITY	3	MAIN ODD PARITY
MAIN 8-BIT WORD	4	MAIN 7-BIT WORD
MAIN BIT 8 MARK	5	MAIN BIT 8 SPACE
60 Hz	6	50 Hz
LOWER CASE	7	UPPER CASE

SWITCH LOCATION D11

OPEN	SW No.	CLOSED (+)
AUX 2 STOP	1	AUX 1 STOP
AUX NO PARITY	2	AUX PARITY ENABLE
AUX EVEN PARITY	3	AUX ODD PARITY
AUX 8-BIT WORD	4	AUX 7-BIT WORD
AUX BIT 8 MARK	5	AUX BIT 8 SPACE
24 LINES	6	12 LINES
UNUSED	7	UNUSED

SWITCH LOCATION E13

OPEN	SW No.	CLOSED (+)
ONLY ONE SWITCH CLOSED IN LOCATIONS TE13 & E14	1	19200 BAUD
	2	9600
	3	7200
	4	4800
	5	3600
	6	2400
	7	2000

SWITCH LOCATION E14

OPEN	SW No.	CLOSED (+)
ONLY ONE SWITCH CLOSED IN LOCATIONS E13 & E14	1	1800
	2	1200
	3	1000
	4	600
	5	300
	6	150
	7	110
	8	75

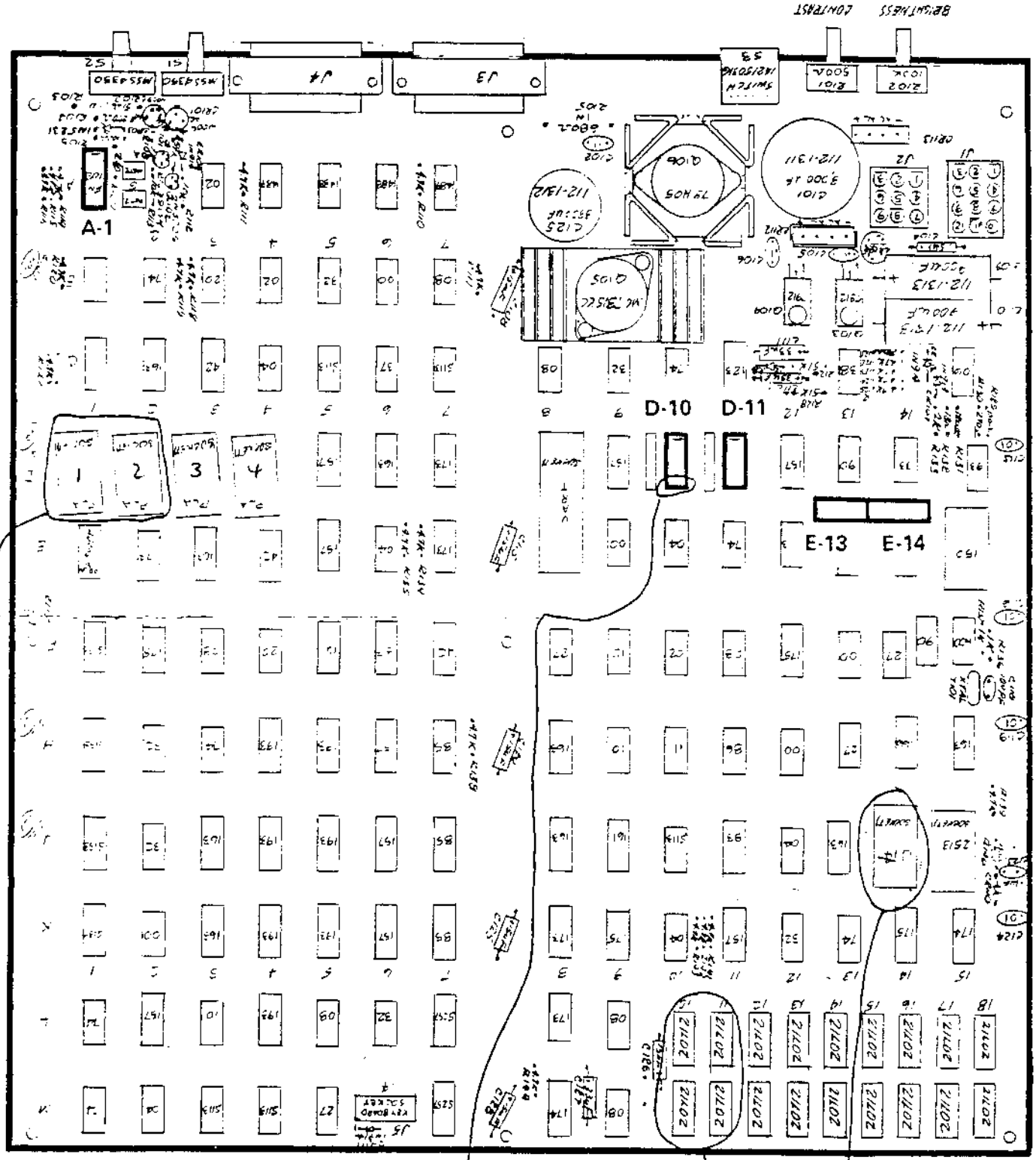

Figure 2.4 ROCKER SWITCH SETTINGS

OPTIONAL PLA'S
: R SPECIAL FUNCTIONS
EDIT, PAGE SEND, CURSOR BLINK, ETC.

PIN "7" of SW.
D-10 must be in
lower case position for
lower case display

4) 21L02's only
necessary for
EDIT, PAGE SEND,
& other "special" functions

LOWER CASE
PROM
103679
MITS
Port

SECTION III

Operation

3.1 INTRODUCTION

This section provides basic operating instructions for the B100 Computer Terminal. To operate this terminal efficiently, the operator should be familiar with the instructions contained in this section. The B100 should be properly installed in accordance with the procedures outlined in Section II of this manual.

The information in this section begins with the general operator's information and becomes more complex with programming information.

3.2 OPERATOR CONTROLS

The Keyboard and key explanations are shown in Figures 3-1 and 3-2. Operation of any key on the keyboard causes either character codes, control codes, or escape sequences to be generated. The one of three types of codes selected by the operator is determined by the key or sequence of the keys depressed. The keycaps are engraved alphanumeric keys or control keys. There are three keys that are used in a sequence with any alpha/numeric key:

To perform an Escape Operation, depress and release the ESC key, followed by the designated alpha/numeric key (see Figure 3-2).

To perform a Control Function, depress the CTRL key and hold this key down while simultaneously typing the alpha/numeric key.

If the lower case option is selected, the SHIFT key is used to generate upper case codes and is operated the same as a typewriter shift key.

Some Control Codes, generated by depressing a Function key, produces a single 8-bit code which is displayed and acted upon, but not transmitted, e.g., cursor movement controls, SEND' CHARACTER DELETE, etc. The Escape or Control Codes generated by depressing the ESC or CTRL keys and an alpha/numeric key, produces two 7-bit codes which are acted upon and also transmitted, e.g., CTRL-Q, ESC-A, etc.

3.3 INITIAL TURN-ON PROCEDURE

Read carefully Figures 3-1 and 3-2 before operating the terminal.

The proper turn-on procedure for the terminal is as follows:

a. Set the rear panel POWER ON/OFF switch to ON; allow a warm-up period of approximately one minute.

B100 Keyboard

ALPHABETIC and NUMERIC KEYS generate all displayable (alpha/numeric and special) character codes corresponding to the letters, symbols or numbers, including the 11 key numeric pad.

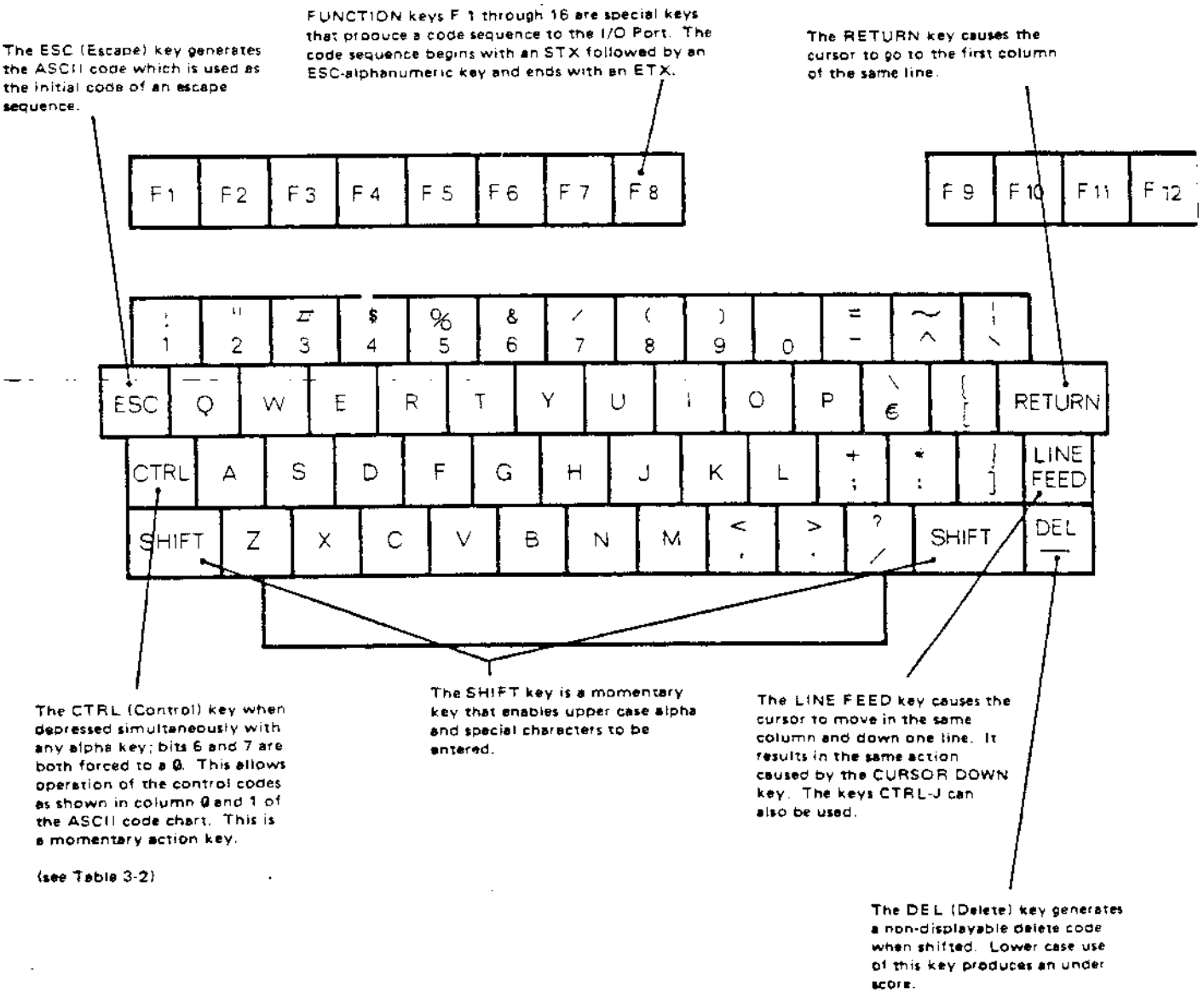

Additional explanation and exercises contained in this Section of the text.

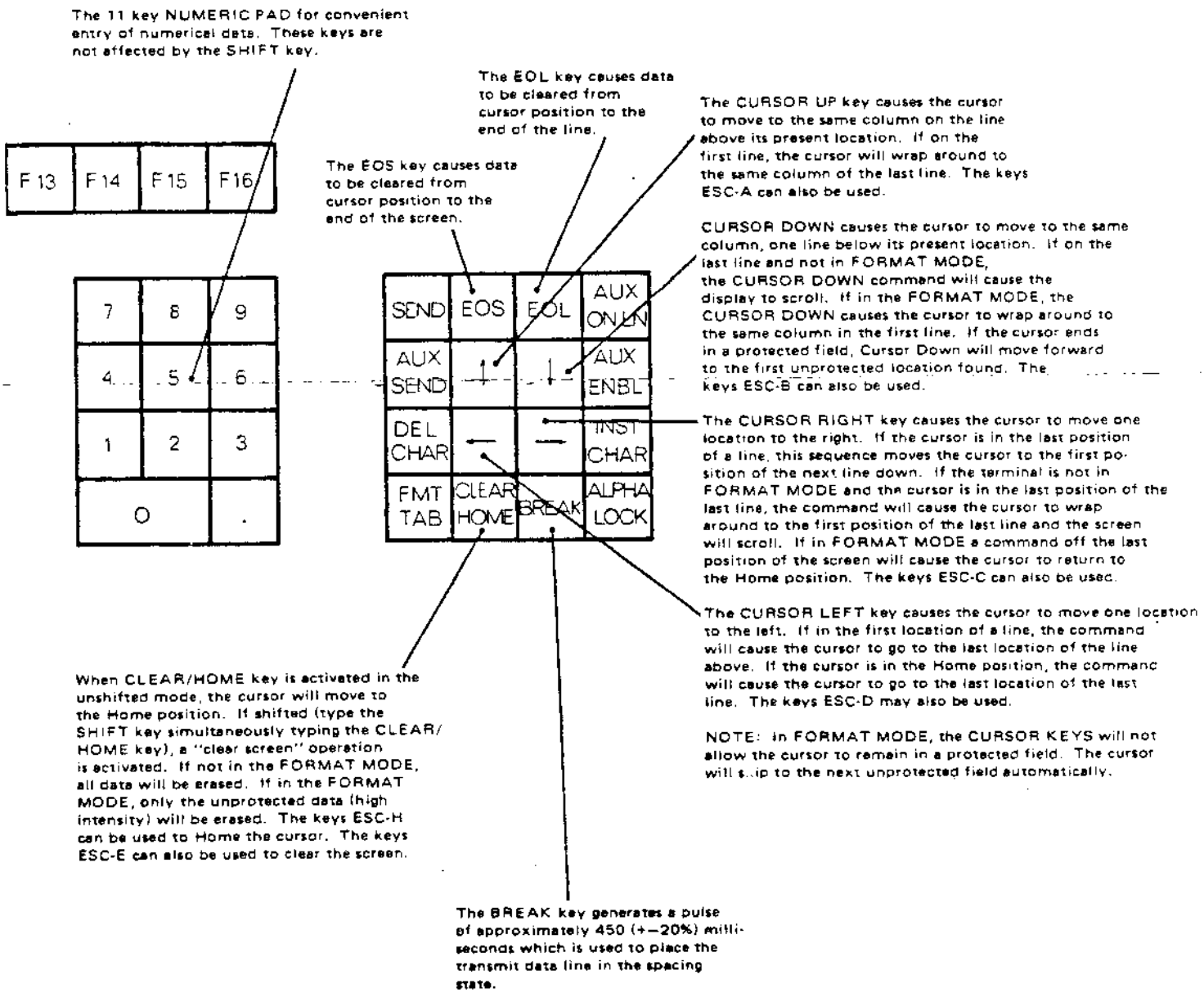

Figure 3-1. THE B100 KEYBOARD WITH OPERATING DEFINITIONS

FORMAT MODE

To start an Unprotected Field, the keys ESC-[are used. The Unprotected Field is the area the operator will use to enter desired data when the FORMAT MODE is used. These fields are identified by higher intensity characters.

To end the Unprotected Field and start the Protected Field, use the keys ESC-]. All data entered into memory following this sequence will be entered as a Protected Field.

The keys ESC-W places the terminal in FORMAT MODE and allows the terminal to recognize protected areas.

To take the terminal out of FORMAT MODE, use the keys ESC-X. This sequence takes the terminal out of FORMAT MODE where low intensity areas look unprotected to the terminal.

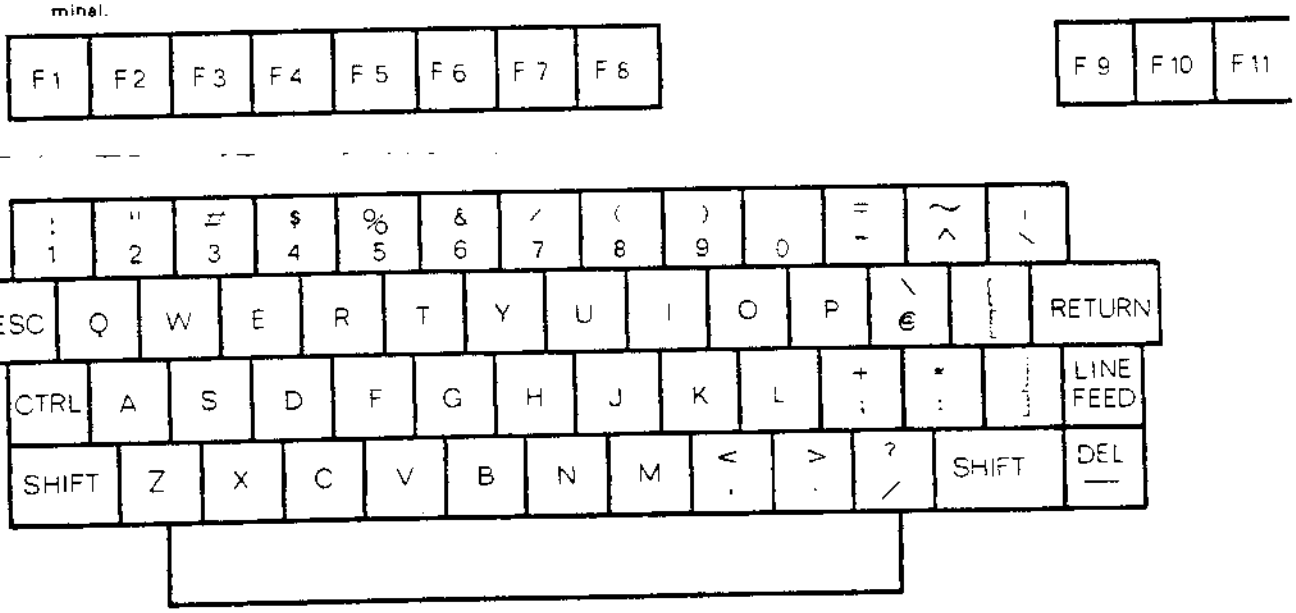

ESC Key Function Instructions

- The keys ESC-m terminates entry of data into a blink field.
- The keys ESC-l entered into memory following this sequence will be placed in a blink field.
- The keys ESC-b causes the keyboard to be enabled (data can be entered from the keyboard).
- The keys ESC-c causes the keyboard to be disabled (data cannot be entered from the keyboard).

  WARNING. Only the computer can remove the disabled state after the keyboard is locked unless the power to the terminal is turned off.
- The cursor can be sent to a specific location on command of the operator. Use the keys ESC-F followed by two characters (see Table 3-4) that represents the line and column coordinates for the character location. If operating in FORMAT MODE and the cursor is placed in a protected area of the display as a result of this command, the cursor will scan right and will stop when it finds the first unprotected location.
- The keys ESC-@ produces a page type block send out the Auxiliary Port.

Additional explanation and exercises contained in this Section of the text.

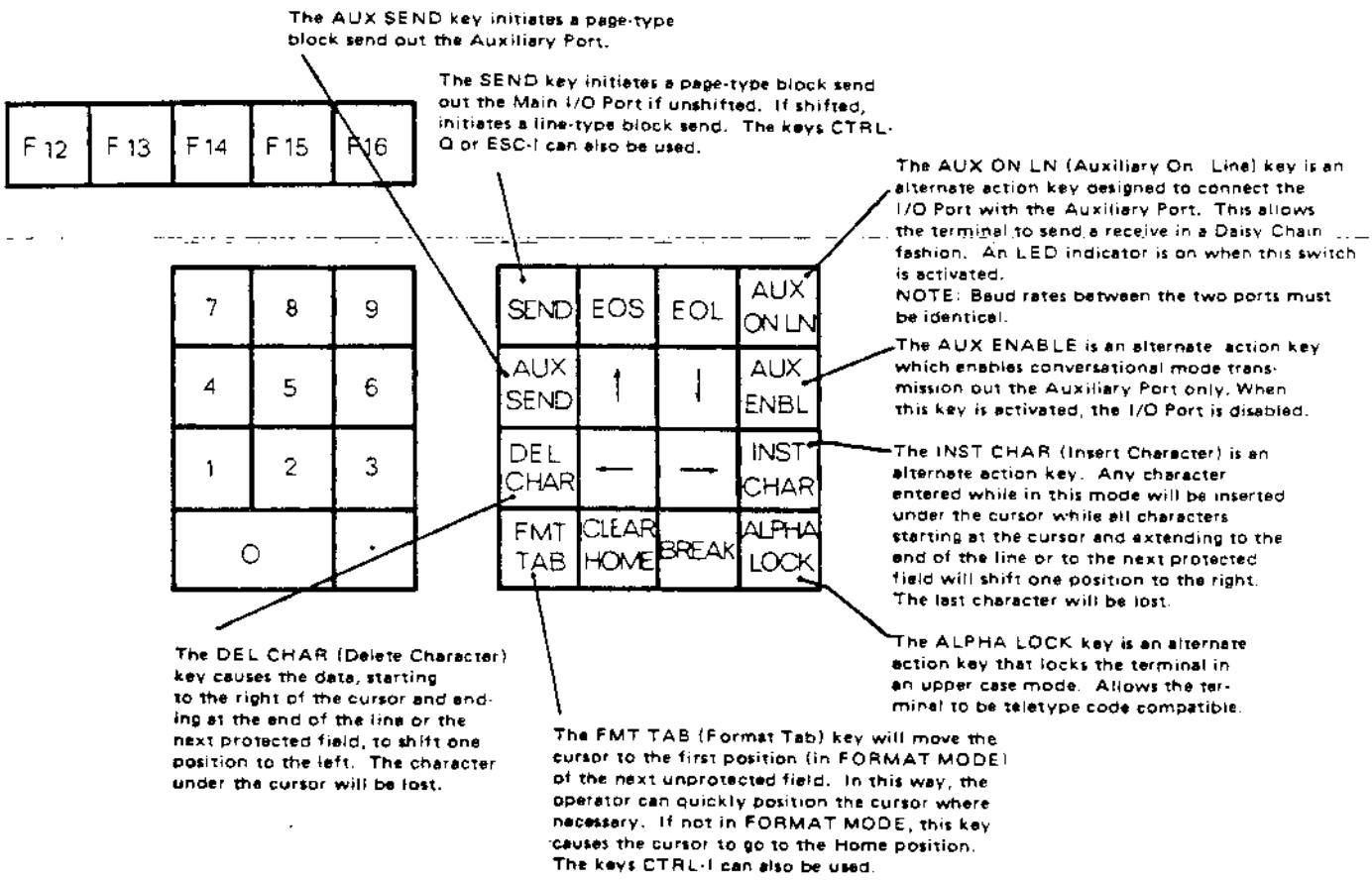

Figure 3-2. B100 KEYBOARD INSTRUCTIONS

and insure that the cursor has appeared in the upper left hand corner of the screen. If the cursor does not appear, check that AC power is secure and go through the Brightness and Contrast adjustments explained below.

b. Turn the BRIGHTNESS CONTROL (located on the rear panel see Figure 2-2) until a raster is faintly visible on the screen. Write several characters on the screen using both high and low intensities (The keys ESC-[and ESC-] produce the different intensities). Reduce the Brightness until the back-ground raster is extinguished. Adjust the Contrast CONTROL (located on the rear panel see Figure 2-2) until the characters are sharply defined and the difference between the two intensities is easily distinguished.

c. Simultaneously depress the SHIFT and CLEAR/HOME keys to clear the screen.

Perform the checkout procedures described in the following paragraphs:

3.4 OPERATOR CHECKOUT PROCEDURES

To test the functional capabilities of the terminal, perform the operator checkout procedures given in the following paragraphs. Before proceeding, insure that the screen is clear and the cursor is in the Home position.

3.4.1 Alternate Action Keys

Perform the initial setup as follows:

a. Set the rear panel HDX/BLOCK/FDX switch to HDX. (see Figure 2-2)
b. Set the rear panel CL/LCL/RS-232C switch to RS-232C.
c. Depress the 'a' key and enter a number of the characters in memory and on the display. Depress the SHIFT key and enter more characters. Note that any letters entered are now capitalized.
d. Depress the RETURN key and notice that the cursor moves to the first location of that line.
e. Depress the LINE FEED key and note that the cursor moves to the same column in the line directly below its previous location.
f. Depress the HOME key and note that the cursor returns to the Home position (the first column on the first line).
g. Depress the LINE FEED key several times followed by several 'a' keys. This should move the cursor toward the center of the screen. Depress the FORMAT TAB key and note that the cursor again moves to the Home position.
h. Depress the SHIFT and CLEAR keys simultaneously. Note that the display completely erases and the cursor returns to the Home position.

3.4.2 Cursor Movement Checkout

Before performing the checkout, depress the CTRL, SHIFT, and CLEAR/HOME keys simultaneously to initialize the terminal circuitry. Insure that the terminal is in a loopback mode (LOCAL or BLOCK or HDX), the cursor is in the Home position, and the display is blank. Perform the checkout as follows:

a. Depress and hold the CURSOR DOWN key until the cursor reaches the bottom line of the display. Once the cursor is on the bottom line and the key is not released, the cursor should remain on the bottom line. The display is actually rolling up at this time.
b. Depress and hold the CURSOR RIGHT→ key until the cursor reaches the last position on the line. Release the key at this time.
c. Depress and hold the CURSOR UP ↑ key until the cursor is on the top line of the display. Release the key with the cursor remaining on the top line.
d. Depress and hold the CURSOR RIGHT→ key. When the cursor reaches the end of the line, the cursor will wrap around to the first position of the next line.
e. Depress and hold the CURSOR LEFT← key to cause the cursor to wrap around to the next position of the line above.
f. Depress the HOME/CLEAR key to move the cursor to the first character position of the first line.

3.4.3 SEND and AUX SEND Checkout

Perform the initial setup as follows:

a. Depress the CTRL, SHIFT, and CLEAR keys simultaneously. This should initialize the display, clear the screen, and Home the cursor.
b. Type a message test consisting of several lines of data.
c. Move the Baud Rate Selection switch to a slow baud rate (use any low number).
d. Leave the cursor at the end of the data which should terminate close to the end of a line.

Perform the checkout as follows:

a. Depress the SEND key. The cursor should automatically move to the Home position and move slowly (rate depends on the baud rate selected)

to the right, character by character and line by line. The transmission should terminate at the original cursor position. This is called PAGE SEND.

b. Depress the SHIFT and SEND keys simultaneously. The cursor should move to the first position of the current line and move slowly across that line only and terminating with the cursor in its original position. This operation is called a LINE SEND.
c. Depress the CTRL and 'Q' keys simultaneously. The resulting operation is identical to that accomplished by depressing the SEND key alone (Page Send).
d. Depress the AUX SEND key. This operation looks like a PAGE SEND. The only difference is that the data is transmitted out the AUX PORT instead of MAIN I/O PORT.

3.4.4 FORMAT Checkout

Perform the initial setup in the following manner;

a. Depress the CTRL, SHIFT, and CLEAR/HOME keys simultaneously. This initializes the display, clears the screen, and sends the cursor to the Home position.
b. Establish the screen format (Unprotected and Protected Fields) by completing the following sequence:
   1. Key in the characters desired in the first unprotected field.
   2. Enter ESC-] this starts a protected field.
   3. Key in the characters desired in the first protected field.
   4. Enter ESC-[this ends a protected field.
   5. Repeat steps 1 through 4 at each location desired.
c. Send an ESC-W sequence which puts the display in FORMAT MODE. The protected areas are the positions of lower intensity. The cursor should have moved to the first unprotected location on the screen.
d. Depress the CURSOR RIGHT→key. The cursor should now move to the right and jump over all of the protected areas (low intensity).
e. Simultaneously depress the SHIFT CLEAR/HOME keys. All data residing in the unprotected areas (high intensity) should be erased, leaving only the protected fields (low intensity) on the screen.
f. Depress the FORMAT TAB key once. The cursor should move to the first position of the next unprotected field. Repeated depressions of the FORMAT TAB key will move the cursor from field to field. When the cursor resides in the first position of the last unprotected field on the screen, the next depression will cause the cursor to then move to the first unprotected position on the screen.
g. Initialize the display with the simultaneous depression of the CTRL, SHIFT, and CLEAR/HOME keys.

3.5 CONTROL FUNCTION OPERATIONS

The Control Functions may be generated from the keyboard or by receipt of corresponding commands from the I/O port. Figures 3-1 and 3-2 provide the sequence of operation for each control function when generated from the keyboard or when received from the I/O port. Table 3-2 depicts the ASCII codes for each control function. Control and Escape Codes generated at the keyboard by depressing the function keys are single 8-bit codes. The Control and Escape Codes generated as a Control or Escape Code sequence at the keyboard or received at the I/O port consist of two 7-bit words.

3.6 OPERATION CODES

The B100 code structure consists of 32 ASCII control codes, 96 ASCII alpha-numerics, and 96 escape sequence codes. Operation codes perform the necessary functions in response to commands generated by control or escape code sequences rather than a single key command. These functions may be generated from the keyboard or received at the I/O Port. Table 3-2 lists the codes, describes their functions and lists the code sequence with octal code.

3.7 TIMING CONSIDERATIONS

Certain functions require longer intervals than one character time at high transmission rates to complete the operation. Longer intervals are provided by inserting filler (null) codes into the data block. The number of fill characters required to fill these intervals for various operations and various baud rates is given in Table 3-1. Although any character may be used, the NULL character (000 octal) is suggested since this code will be completely ignored.

3.8 PERFORMANCE CHARACTERISTICS

Modes of Communication

The B100 Terminal is capable of operating Off-Line (Local) or On-Line. In the Local Mode, all communication with external devices is cut off and data generated at the Keyboard is only seen locally by the terminal itself. Three operational modes of communication are provided when the terminal is On-Line; Full Duplex (conversational), Half Duplex (conversational), and Block. Full Duplex operation

allows data to be transmitted with the terminal's receiver input enabled for immediate computer reply of the transmitted data (echoplexed) to verify proper receipt of the data, if the computer is so programmed. Half Duplex Data Transfer is generally used for messages or sending messages character by character where echoplex is not available. Keyboard data entered while the terminal is operating in Half Duplex is entered into memory and displayed, and does not require the echoplex process from the CPU to verify the accuracy of the message. In Block Mode, data generated at the Keyboard is not sent out the main I/O port but is sent directly to the screen. This mode allows the operator the option of composing the message on the screen, verifying its accuracy, and sending the entire message on command. The transmission of the message is initiated by depressing the SEND key. Transmission is accomplished by simply depressing the SEND key alone while the data can be sent a line at a time with the simultaneous actuation of the SEND and SHIFT keys. While transmitting data in either the Line or Page modes, the Keyboard is disabled. Use of the block mode feature differs from message preparation Off-Line by the fact that the terminal receiver is enabled in Block Mode.

3.9 MODES OF TRANSMISSION

3.9.1 Character (conversational) Transmission

During character transmission, the terminal must be on line. Received alphanumerics are stored in memory and displayed. Received Control Codes or Escape Codes cause the unit to perform the appropriate function, and are not stored in memory or displayed. In Full Duplex operation, Control Codes and Escape Sequence Codes are transmitted but are not acted upon unless echoplexed back to the terminal. In Half Duplex mode, Control Codes and Escape Sequence Codes are transmitted and acted upon. In FORMAT MODE, the cursor cannot enter the protected fields established by the delimiter codes, therefore, only the data in the unprotected fields are transmitted. In Character Mode, all data is transmitted.

3.9.2 Block Transmission (Line or Page)

Block Transmission is used to allow the operator to prepare data and then transmit the data as a unit. The transfer can be initiated either from the Keyboard or the I/O. A Block Transfer is initiated from the Keyboard by depressing the SEND key (unshifted for Page Mode or shifted for Line Mode). A Page Mode Transmission may be initiated from the I/O by sending either keys CTRL-Q or an ESC-I. Line Mode Transmission is accomplished by sending an ESC-i. When the Page Mode Transmission is actuated, the cursor returns to Home, the request-to-send line is actuated, and the terminal waits for approximately 200 milliseconds and waits for a Clear-to-send to come true.

The terminal then issues an STX as the start of message delimiter and begins transmission. Transmission begins at the Home position and the cursor advances one position to the right after each character is transmitted. If not in the FORMAT MODE, a two-character sequence (Carriage Return and LINE FEED) is issued whenever the end of a line is encountered. All NULL codes residing in memory are not transmitted. When the cursor reaches its original position and the character is transmitted, the terminal issues an ETX code to indicate the end of the message. The terminal then waits approximately 200 milliseconds, drops the request-to-send line and enables the Keyboard. If in FORMAT MODE, only the unprotected data fields are transmitted and an ASCII Horizontal Tab (HT) code is transmitted at the end of each unprotected field. Also in FORMAT MODE, the CR/LF sequence at the end of each line is suppressed.

In the Line Send Transmission Mode, the operation is essentially the same as described above. However, the cursor is returned to the first position of the current line instead of the Home position before the transmission is started.

3.9.3 Auxiliary Character Transmission

Conversational Mode (character-by-character) transmission can be accomplished out the AUX PORT by depressing the alternate action AUX ENABLE key on the keyboard. Then, if the terminal is in one of the conversational modes (HDX or FDX), any alphanumeric keys depressed on the Keyboard will cause transmission of the associated code out the AUX PORT instead of the Main I/O Port. A block transmission for the Main Port will override this Aux Enable switch for the duration of the message.

3.9.3 Auxiliary Port Block Transmission

This transfer can be initiated from the Keyboard or the I/O Port. A page-type transmission out the Aux Port is actuated by depressing the AUX Send key on the Keyboard or by sending and ESC-0 (zero) sequence into the I/O Port. Delimiters may be sent in four positions during this page transmission; Start of Message, End of an Unprotected Field, End of Line, and End of Message.

3.9.4 Auxiliary Port Block Transmission

This transfer can be initiated from the Keyboard or the I/O Port. A page-type transmission out the Aux Port is actuated by depressing the AUX Send key on the Keyboard or by sending an ESC-0 (zero) sequence into the I/O Port. Delimiters may be sent in four positions during this page transmission; Start of Message, End of an Unprotected Field, End of Line, and End of Message.

3.10 BAUD RATE SELECTION

Transmission rates for the main I/O Port are rotary switch selectable at the rear of the terminal. This rotary switch has sixteen positions which select the normal fifteen baud rates and an externally supplied baud clock. The rates internally available range from 75 to 19200 baud.

3.11 OPERATING MODES

Format Mode

The FORMAT MODE is selectable from the Keyboard or from a remote data source initiated by an Escape Sequence (ESC W). In the FORMAT MODE, the terminal display has Protected Fields in which the cursor cannot be positioned and no data entered. The Protected Fields are differentiated from variable data by being displayed in half intensity. The display of the half intensity data can be internally selected to operate in one of two ways. First, the half intensity can be enabled continuously without regard to the state of the FORMAT MODE. However, the display of the lower intensity can be strapped to follow the FORMAT MODE. That is, if the display is not in FORMAT, all data would be displayed in normal intensity, and would only go to lower intensity if the data is truly protected. If in the FORMAT MODE the display will not roll if the cursor is taken off the bottom line of the display. In this situation, the cursor recycles to the top line.

3.12 MEMORY AND DISPLAY ORGANIZATION

The B100 terminal has 1920 displayable character locations. Characters are stored in the memory on a line basis, 80 characters per line. The lines in the memory are organized on a page basis where 24 lines make up one page. The memory location where the next character will be stored is marked by the cursor. Character codes already entered can be replaced by a space or any other code. If the cursor is advanced beyond the end of the display and the terminal is in FORMAT MODE, the display will not scroll and the cursor returns to the first unprotected field at the top of the display. If not in the FORMAT MODE, and the cursor is advanced beyond the end of the display, the cursor remains on the last line and the display scrolls up a line. Writing beyond the end of the display or scrolling the display causes the loss of the data on the first line. If the line in memory has less than 80 characters, the displayed line has ASCII Null codes written to the eightieth character position.

3.13 CHARACTER OVERWRITE

When an error is made in entering a character (misspelled word), a correction can be made by repositioning the cursor and overwriting the character. When in either of the conversational transmission modes, characters will overwrite the display, but will also be transmitted as additional data.

3.14 AUXILIARY PORT

The AUX Port operates at RS-232C logic levels and outputs and receives negative-true data. This port is not affected by the local switch and is always "on line" to its external device. The operator can talk to the external device on this port in both Conversational and Block Modes. In Conversational Mode, the operator can accomplish a character-by-character transmission out the AUX Port by depressing the AUX ENABLE alternate action key on the Keyboard. If a Block Mode transmission is desired, a page send operation can be initiated by depressing the AUX SEND key on the keyboard. Data may be transmitted at a different baud rate than that of the Main I/O Port (e.g., the I/O may operate at 9600 baud while the AUX Port may operate at 1200 baud). The AUX Port baud rate is strap selectable internally in the unit. The AUX Port may be controlled by utilizing the READY/BUSY line or with an internally activated time delay.

3.15 MAIN INPUT/OUTPUT PORT

The main I/O Port operates at RS-232C logic levels and outputs and receives negative-true data. The I/O Port outputs data to and inputs data from the remote data source when the terminal is in the On-Line condition.

The only requirement for receiving data is that the terminal be in the On-Line condition. Therefore, if the terminal is On-Line, any data coming into the terminal from either the AUX or Main Ports will be processed. When transmitting data, if the terminal is On-Line and a key is depressed on the Keyboard, the I/O will place circuit CA (request-to-send) in an

"on" condition. If the terminal then receives Clear-to-Send, it will send the data and drop Request-to-Send. If no connection is made to the Clear-to-Send input, the terminal assumes that permission was granted and the data is transmitted.

The B100 terminal offers Serial Asynchronous Transmission and Reception of data. Asynchronous word structure consists of a start bit, seven data bits, a parity bit (odd, even, mark, or space) and one or two stop bits. All of these configurations are internally strap selectable.

3.16 CURSOR ADDRESS

Cursor addressing allows the cursor to be positioned by sending a four code sequence. The cursor may be addressed from the keyboard or from the I/O Port. The cursor is addressed by receiving the following four word sequence: ESC-F, Line, Address, and Character Address.

ESC-F, Y, X

NOTE: Illegal addresses placing the cursor beyond the 80th character will cause the cursor to disappear. The cursor can be recovered by depressing the HOME or SHIFT/CLEAR keys.

For example, to position the cursor to line 15 and character position 41, send the following sequence: ESC (ØØØ1 1Ø11), F (Ø1ØØ Ø11Ø), period (ØØ1Ø 111Ø), H (Ø1ØØ 1ØØØ). Table 3-4 gives the character and line location ASCII characters required to address any position on the display.

3.17 FORMAT TAB

In FORMAT MODE, the cursor moves from one Unprotected Field to another as the FORMAT TAB key is depressed. If the cursor is located in the last unprotected Field when the TAB key is depressed, the cursor moves through the Home position. If the Home position is protected, the cursor moves forward to the first unprotected position on the screen. If the Home position is unprotected, the cursor will remain there.

If the display is not in FORMAT MODE, the cursor will move to the home position and remain there.

3.18 BLOCK SEND DELIMITER PROM

In normal operation, the B100 automatically sends an STX at the beginning of each block of data, and an ETX as a message trailer at the end of the block. If in Format Mode, a format field delimiter (ASCII HT) is sent at the end of each unprotected field. If not in Format Move, an end-of-line delimiter (ASCII CR followed by an ASCII LF) is inserted in the appropriate position in the data stream. Utilization of an optional, field programmable read-only-memory (PROM allows the terminal to conform to special user requirements. With this option, the terminal has the capability of sending either none, one, or two ASCII codes in all four of the message positions described above. In addition, the activation of an internal transmission time delay for the Auxiliary Port can be programmed into the same PROM.

FUNCTION	BAUD RATE		
	19200	9600	7200
CLEAR	5 nulls	3 nulls	1 null
EOS FROM HOME	5 nulls	3 nulls	1 null
TAB	2 null	0	0
I/O BAUD SWITCH #	14	13	12

Table 3-1. TIMING FILLER NULL CODES

Table 3-3. INPUT/OUTPUT WORD STRUCTURE

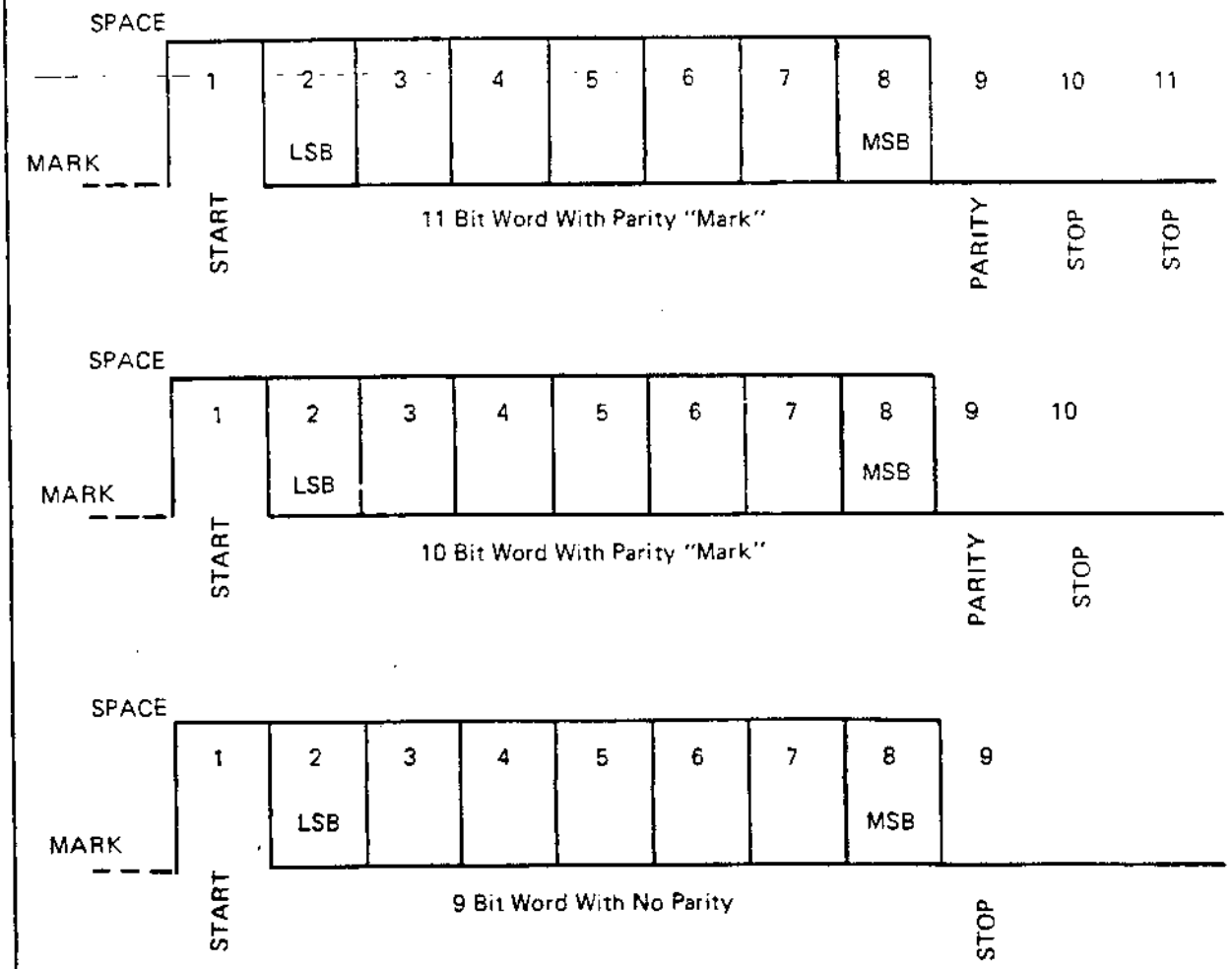

BIT 7 6 5 4 3 2 1	CONTROL CHARACTERS 0_{00}	CONTROL CHARACTERS 0_{01}	DISPLAYABLE CHARACTER 0_{10}	DISPLAYABLE CHARACTER 0_{11}	DISPLAYABLE CHARACTER 1_{00}	DISPLAYABLE CHARACTER 1_{01}	DISPLAYABLE CHARACTER 1_{10}	DISPLAYABLE CHARACTER 1_{11}	ESCAPE SEQUENCE 0_{10}	ESCAPE SEQUENCE 0_{11}	ESCAPE SEQUENCE 1_{00}	ESCAPE SEQUENCE 1_{01}	ESCAPE SEQUENCE 1_{10}	ESCAPE SEQUENCE 1_{11}
0000	NUL @ 0	DLE P	SP	0	@	P	\	p		AUX SEND Ø		DELETE CHAR P		F1
0001	SOH A	DC1 Q	!	1	A	Q	a	q			↑ A	INSERT CHAR(ON) Q		F2
0010	STX B	DC2 R	"	2	B	R	b	r			↓ B	INSERT CHAR(OFF) R	KEYBOARD ENABLE n	F3
0011	ETX C	DC3 S	#	3	C	S	c	s			→ C		KEYBOARD DISABLE c	F4
0100	EOT D	DC4 T	$	4	D	T	d	t			← D			F5
0101	ENQ E	NAK U	%	5	E	U	e	u			CLEAR & home E			F6
0110	ACK F	SYN V	&	6	F	V	f	v			CURS ADD F	F		F7
0111	BEL G	ETB (XMIT) W	'	7	G	W	g	w				FORMAT ON W		F8
1000	BS H	CAN X	(	8	H	X	h	x			HOME H	FORMAT OFF X		F9
1001	HT I	EM Y	)	9	I	Y	i	y			PAGE SEND I		LINE SEND	F10
1010	LF J	SUB Z	*	:	J	Z	j	z			EOS J			F11
1011	VT K	ESC [	+	;	K	[	k	{			EOL K	START SB Unprotected Field [		F12
1100	FF L	FS \	,	<	L	\	l	|					START BLINK l	F13
1101	CR M	GS]	-	=	M	]	m	}				END SD Unprotected Field]	STOP BLINK m	F14
1110	SO N	RS ^	.	>	N	^	n	~						F15
1111	SI O	US _	/	?	O	_	o	DEL						F16

Table 3-2. ASCII CODE CHART

Table 3-4. CURSOR ADDRESS CODES

ESC-F

LINE FIRST

ABSOLUTE CURSOR POSITIONING

X or Y	ASCII CODE	X or Y	ASCII CODE	X or Y	ASCII CODE
1	SPACE	28	;	55	V
2	!	29	<	56	W
3	"	30	=	57	X
4	#	31	>	58	Y
5	$	32	?	59	Z
6	%	33	@	60	[
7	&	34	A	61	\
8	'	35	B	62	]
9	(	36	C	63	^
10	)	37	D	64	_
11	*	38	E	65	`
12	+	39	F	66	a
13	,	40	G	67	b
14	-	41	H	68	c
15	.	42	I	69	d
16	/	43	J	70	e
17	0	44	K	71	f
18	1	45	L	72	g
19	2	46	M	73	h
20	3	47	N	74	i
21	4	48	O	75	j
22	5	49	P	76	k
23	6	50	Q	77	l
24	7	51	R	78	m
25	8	52	S	79	n
26	9	53	T	80	o
27	:	54	U		

B100 Maintenance Manual
TABLE OF CONTENTS

Section		Page
	SECTION IV – THEORY OF OPERATION	
4-1	Introduction	4-1
4-2	General Function Description	4-1
4-3	Detailed Functional Description	4-6
	SECTION V – MAINTENANCE	
5-1	Introduction	5-1
5-2	Preventive Maintenance	5-1
5-3	Corrective Maintenance	5-1
5-4	Monitor Adjustment	5-17
5-5	Disassembly Procedure	5-18
	SECTION VI – SCHEMATICS	
6-1	B100 Board Assembly Drawing	6-1
6-2	B100 Schematics	6-2 thru 6-17
	APPENDIX	
A.	Monitor - General Information	
	TABLES	
Table		Page
5-1	Troubleshooting Flow Diagrams	5-3 – 5-15
	FIGURES	
Figure		Page
4-1	Basic Block Diagram	4-2
4-2	Basic Functional Flow Diagram	4-3
4-3	Basic Functional Flow Diagram	4-4
4-4	Power Supply Block Diagram	4-5
4-5	Character Dot Matrix	4-8
4-6	Timing Diagram	4-9
4-7	Timing Diagram	4-10
5-1	Echoplex Test Connector	5-2
5-2	Monitor Adjustments	5-16
5-3	Assembly Drawing B100	5-18

SECTION IV

Theory of Operation

4.1 INTRODUCTION

This section contains the theory of operation for the BEEHIVE B100 Terminal. This discussion is presented as a functional description at a detailed block diagram level referencing appropriate functional blocks on the diagrams.

4.2 GENERAL FUNCTIONAL DESCRIPTION

The B100 consists of four basic functional components, Power Supply, Monitor, Keyboard and Main Logic Board. Figure 4-3 shows the basic functional flow diagram of the terminal. These functions are briefly described in the following paragraphs.

4.2.1 Power Supply

The Power Supply provides the required, regulated DC voltages to the terminal. This assembly will operate on 100, 115, 200 or 230 VAC power (selectable at the factory).

4.2.2 Monitor

The Monitor Assembly includes a 12 inch (30.5 cm), diagonally measured, CRT and its supporting solid-state circuitry. The Monitor is controlled by the vertical and horizontal synchronization signals, and the video signals generated on the logic board. A full screen of information consists of 12 lines of 80 characters -- a two raster scan between lines -- or the optional feature of 24 lines of 80 characters each. Brightness and contrast adjustments are provided by external potentiometers located on the rear panel, (see Figure 2-2, Section II). Other monitor adjustments are discussed in Section V and in Appendix A.

4.2.3 Keyboard

The keyboard is the input device used by the operator to communicate with the terminal. The keyboard contains the switches and supporting circuitry to generate the appropriate control signals and ASCII codes utilized in the B100 terminal. The keyboard conforms to the proposed ANSI keyboard standard for data keys, but has been expanded to facilitate the capabilities of the B100.

4.2.4 Logic Board

The Logic Board contains the major function and control circuits in the B100 terminal. It also holds all of the DC voltage regulators to power the unit. The basic operations accomplished by the main logic board are: Generation of data and control signals for the monitor, interaction with the keyboard, control of the data sent between the B100 and any external device, and generation of the basic timing signals essential for the operation of the terminal.

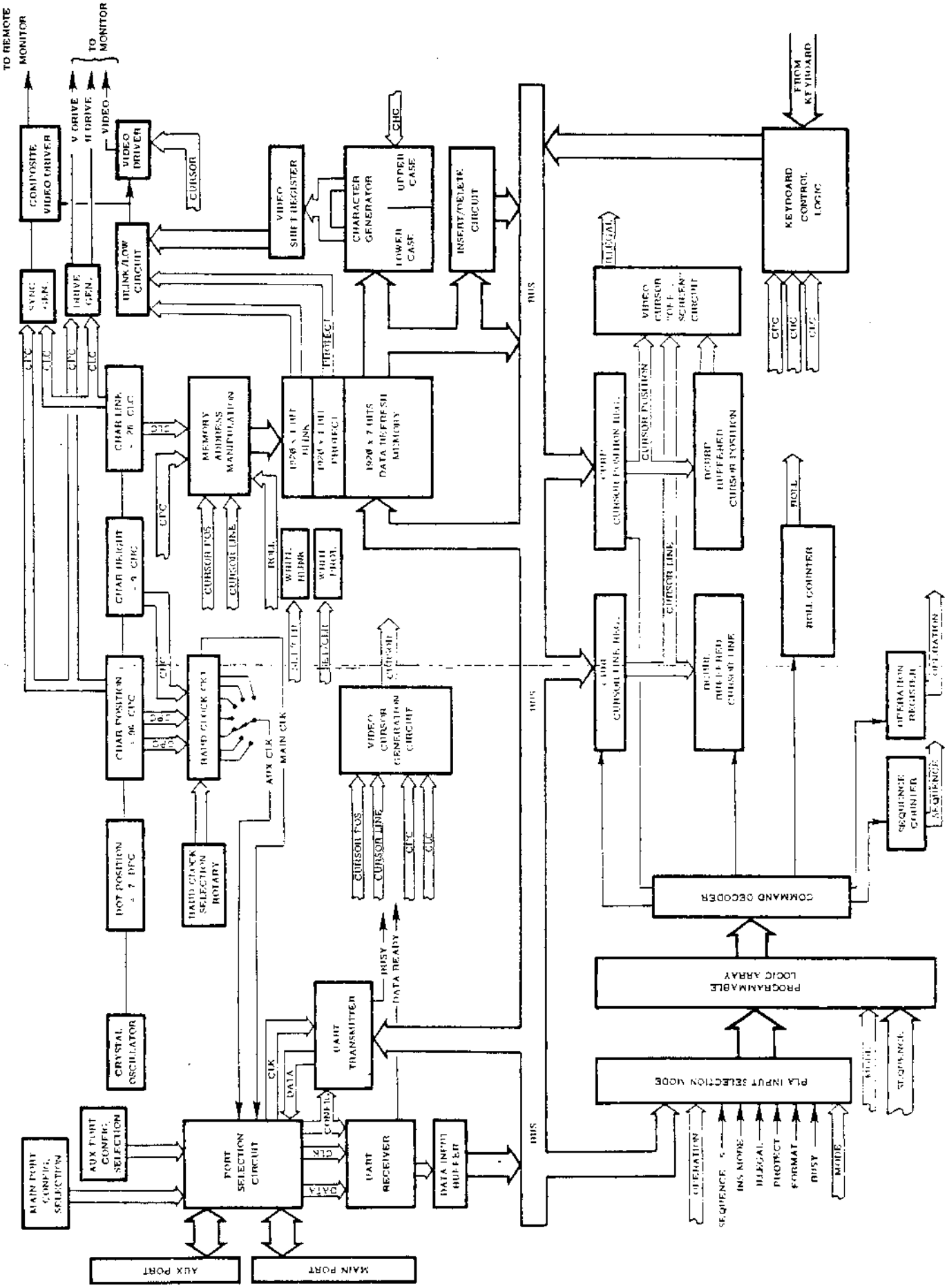

FIGURE 4-1 BASIC BLOCK DIAGRAM

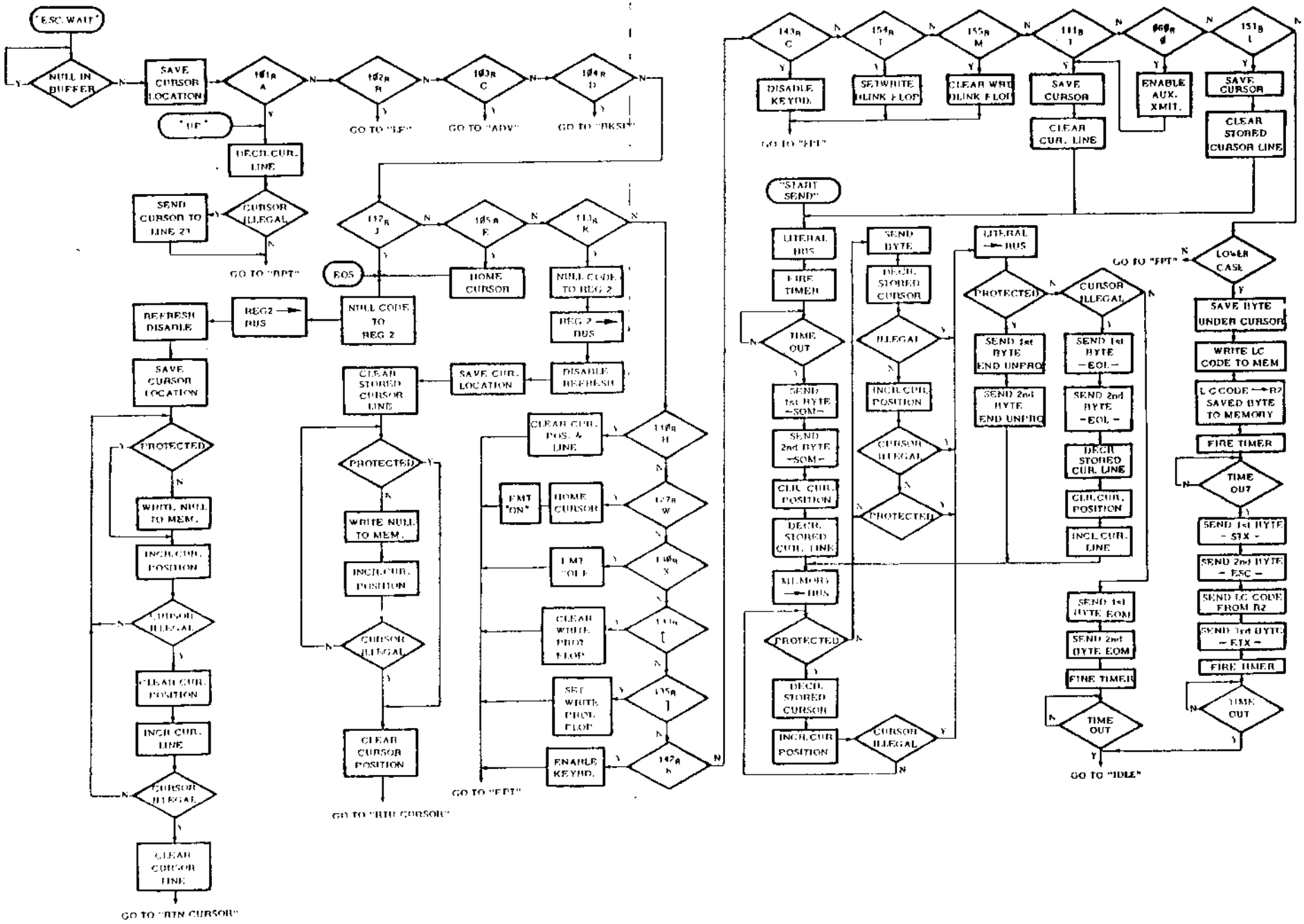

FIGURE 4-2 BASIC FUNCTIONAL FLOW DIAGRAM

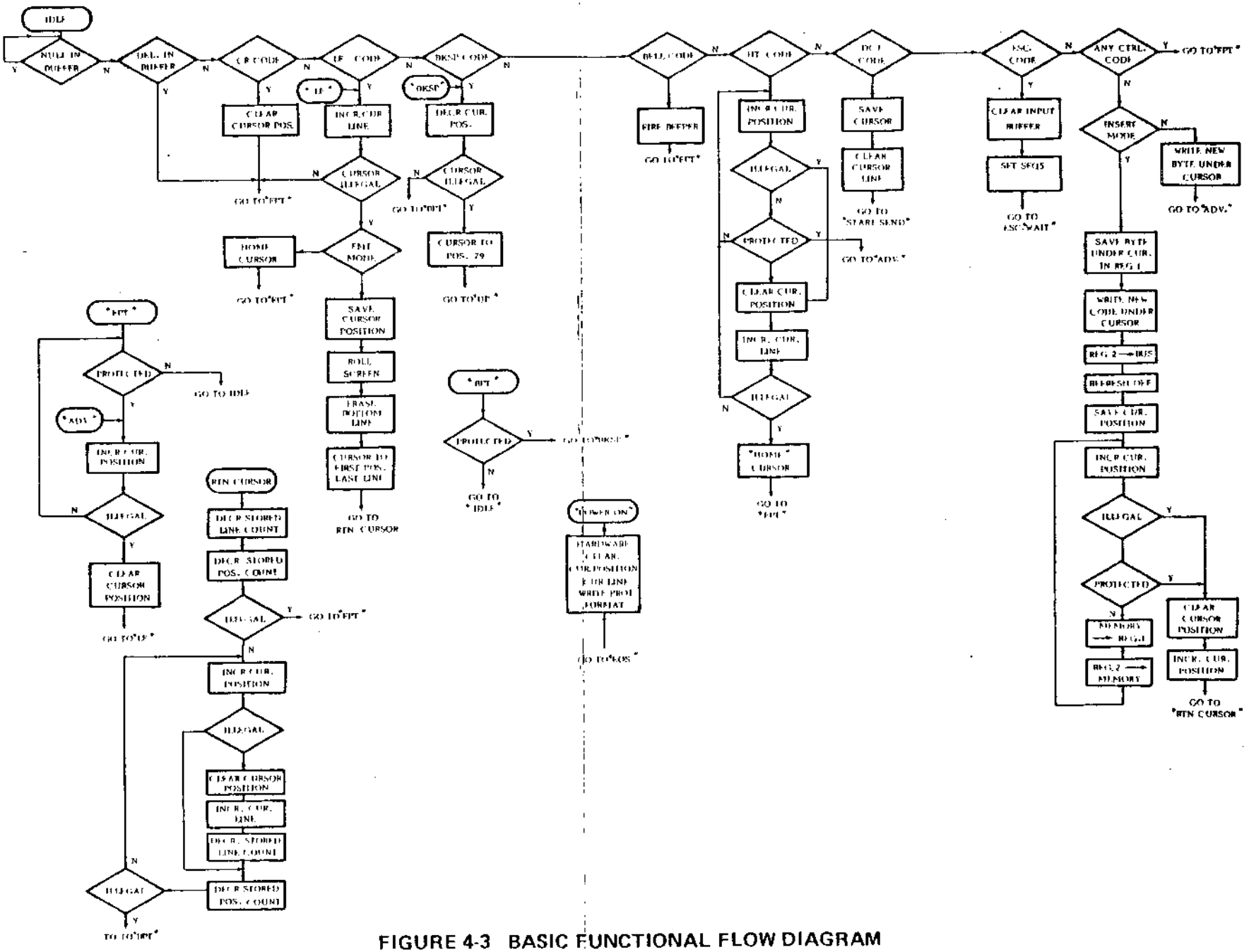

FIGURE 4-3 BASIC FUNCTIONAL FLOW DIAGRAM

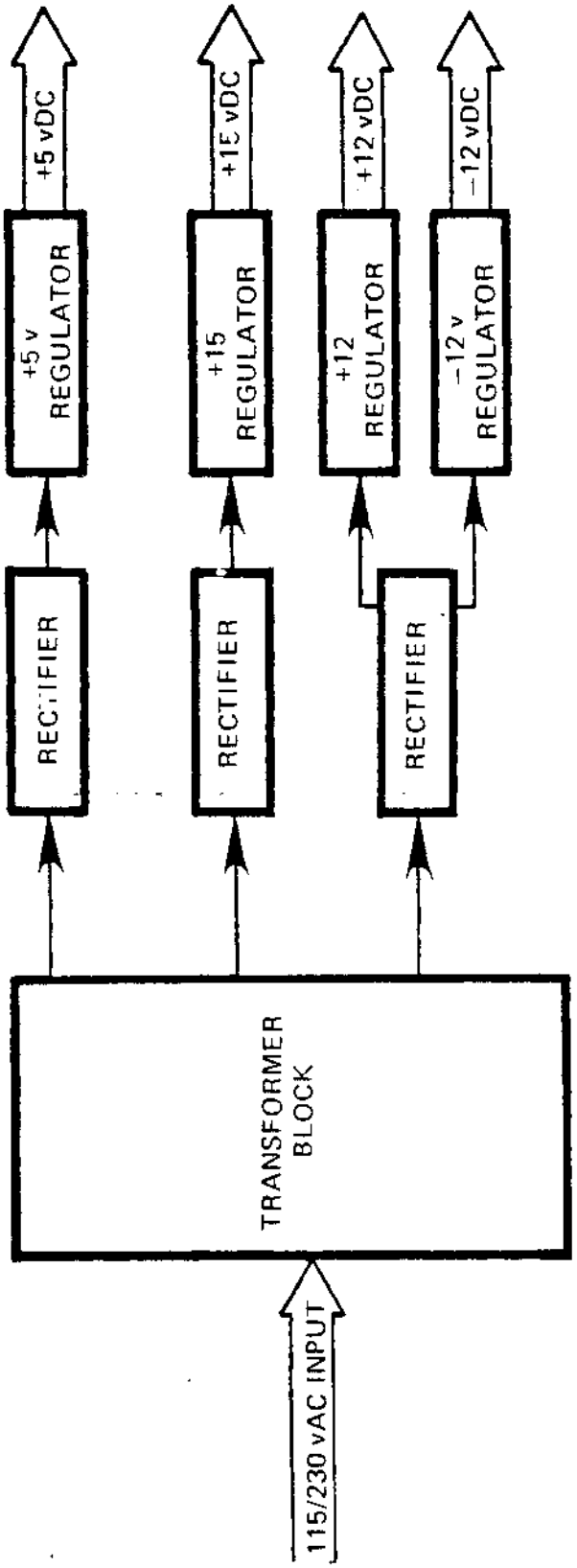

FIGURE 4-4 POWER SUPPLY BLOCK DIAGRAM

4.3 DETAILED FUNCTIONAL DESCRIPTION

A detailed discussion of the BEE HIVE B100 terminal operation is contained in the following paragraphs. The Subassembly components of the terminal are functionally interdependent, however, the isolation of various functions to the responsible subassembly is relatively simple. The function of each subassembly is also described. Schematic diagrams are provided in Section VI of this manual.

4.3.1 Power Supply

The Power Supply provides +5, +15, +12, and -12 VDC voltages to the circuitry from a 115 or 230 VAC source at 50 or 60 Hz. Figure 4-4 is a block diagram of the Power Supply subassembly. The DC regulators utilized are overcurrent and thermally protected.

The power applied to the Power Supply is stepped down in voltage. The transformer output voltages are rectified by three bridge circuits. The output from the rectifiers and filters provides power to the +5, +15, +12, and -12 VDC regulator circuits.

4.3.2 Monitor

The monitor displays data on the CRT in a pattern determined by the vertical and horizontal synchronization signals, and the video information driving signals. A +15 VDC voltage is applied by the Power supply to the Monitor. Appendix A presents general and detailed data on the Monitor Assembly.

3.3.3 Vertical Synchronization

Vertical synchronization is applied to the vertical oscillator and triggers it at the vertical refresh rate determined by the driving logic. The vertical frequency is stabilized by the vertical frequency control, which determines the point of oscillation. The output pulse of the vertical oscillator is applied to the driver amplifier which shapes the pulse and is controlled by the vertical linearity control, The output of the driver amplifier is applied to the vertical driver by way of the height control. The vertical driver output pulse is applied to the yoke of the CRT and causes vertical deflection. The refresh rate is 50 - 60 Hz. switch selectable.

4.3.4 Horizontal Synchronization

The horizontal synchronization pulses are applied to the horizontal amplifier where they are amplified and applied to the horizontal driver. The output of the horizontal drive is applied through the width coil to the yoke, where it causes the horizontal deflection. The horizontal deflection signal is also applied to the flyback transformer. The horizontal deflection signal is stepped up to approximately 12 KV where it is then rectified, filtered and applied to the anode cap of the CRT to provide the high voltage required.

4.3.5 Video Information

The Video Information is applied to the video amplifier by way of the contrast control, external to the monitor. The video information signal from the video amplifier is applied to the cathode of the CRT gun to cause an On/Off condition corresponding to light patterns of the screen. The brightness control is external to the monitor and varies the voltage on the accelerating grid of the CRT.

4.3.6 Keyboard

The keyboard is compatible with ANSI standards. Figure 3.2 defines the ASCII codes available. Figure 1.2 shows the keyboard layout.

The keyboard enables the operator to manually input information to the terminal. When a key is depressed, the keyboard logic generates the corresponding 7-bit ASCII code and presents the data in parallel form to the keyboard data lines. After a short delay for debouncing, the strobe is driven to its active level and held there as long as the key is held down. For those keys which auto repeat, the strobe line is pulsed at a 15 character per second rate. The BREAK key is not encoded, but is a function line that is driven low for approximately 400 milliseconds when the key is depressed.The following keys cause special 8-bit (non-ASCII) codes: AUX SEND, ↓ , →, ←, ↑ , CLEAR/HOME, SEND, EOS, EOL, and DELETE CHAR. These codes are used internal to the CRT only and are not transmitted.

4.3.7 Display Organization

The main timing chain (oscillator, dot position counter, character position counter, character height counter, and character line counter)

defines the configuration of the display on the CRT. There are 30 lines, 6 of which are used for vertical retrace and 24 of which are used to display characters . The 30 lines are composed of nine scans each. Each scan being composed of 96 character times, 80 for display and 16 for horizontal retrace. Each character block is composed of 7 x 9 dot matrix field which contains a 5 x 7 character matrix for the displayed character.

Oscillator The oscillator is crystal controlled with a frequency of 10.8864 MHz. Two 74H04's are connected in series by a 100pf capacitor. Each 74H04 has a 1 Kohm feedback resistor around it. A 10.8864 MHz crystal is connected from the input of the first 74H04 to the output of the second. The output of the oscillator is buffered, inverted and fed to the Dot Position Counter.

Dot Position Counter This divide-by-seven counter defines each of the seven dots required to compose one character. The outputs of this four stage counter are labeled DPC1, DPC2, DPC4, and DPC8. The Counter actually presets to a count of 10, counts up through the overflow point at 15 to a count of zero, and presets then back to a count of 10. The Dot Position counter output, DPC8, drives the Character Position Counter.

Character Position Counter The Character Position Counter is composed of two binary-type counters that define 96 character times, each being seven dots wide. The output of the Character Position Counter drives the Character Height Counter.

Character Height Counter The Character Height Counter is a standard counter that defines 9 scans of 96 characters each, with each character being seven dots wide. The output of the Character Height Counter drives the Character Line Counter.

Character Line Counter The Character Line Counter is a binary counter that starts at a count of zero and counts to a maximum of 29 for a total of 30 character lines. The final output of this counter runs at the vertical refresh rate.

Horizontal and Vertical Drive The Horizontal Drive is started when the Character Position Counter leaves the video area of the scan and is active for the following 40 character times. The high active output of this flip-flop is sent to the monitor on pin 9 of connector J1.

The vertical drive is generated during the time that the Character Line Counter is decoding 26.

4.3.8 Cursor Location Counter

The Cursor Location Counter identifies the location of the cursor. This is a count made from the Cursor Line Counter, called CURL, and the Cursor Position Counter, called CURP. These two counters, in conjunction with the ROLL counter, are used to address the memory to determine the entry point of the next character. The cursor location counters are compared with the next character. The cursor location counters are compared with the Character Position Counter and the Character Line Counter to generate the signal called CNTR CURSOR. This signal is used to generate the cursor displayed on the CRT. Also associated with the cursor location counters is the appropriate circuitry to move the cursor up, down, right, left, home,etc. A LINE FEED code causes the Cursor Line Counter to increment by one. A CARRIAGE RETURN code clears the Cursor Position Counter.

With the terminal operating in FORMAT MODE, when the cursor is incremented off the bottom line, the cursor automatically wraps around to the top of the display, i.e., the Cursor Line Counter is reset to zero. However, if the terminal is not in FORMAT MODE, the display scrolls whenever the cursor increments from a count of 23.

A scroll is initiated by any of 3 functions if activated when the cursor is on the last line of the display and the terminal is not in FORMAT MODE:

a. LINE FEED or CTRL J
b. CURSOR DOWN or ESC B
c. If the cursor is on the last position of the last line.

    1. Cursor right

    2. Any displayable character

    3. Space

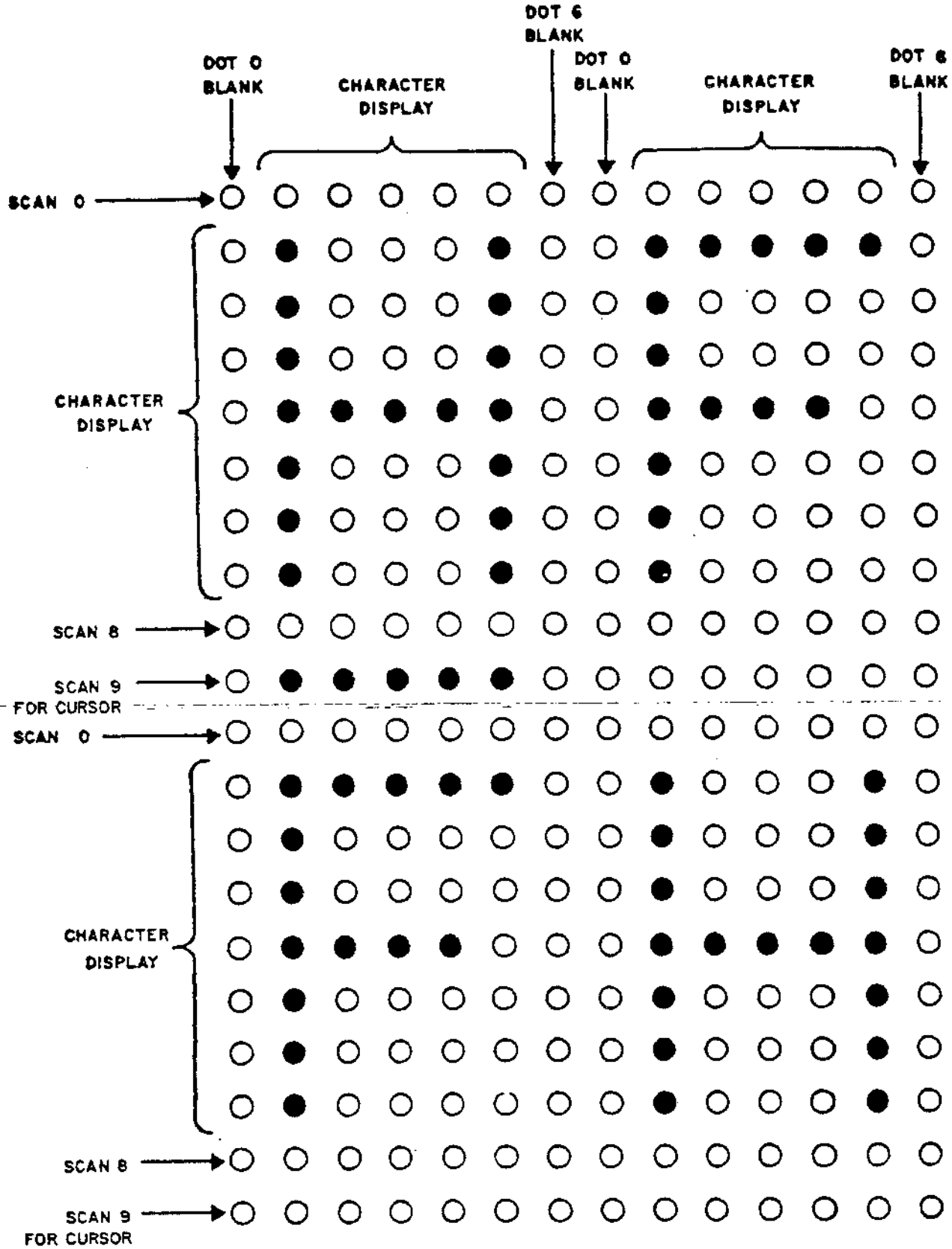

FIGURE 4-5

CHARACTER DOT MATRIX

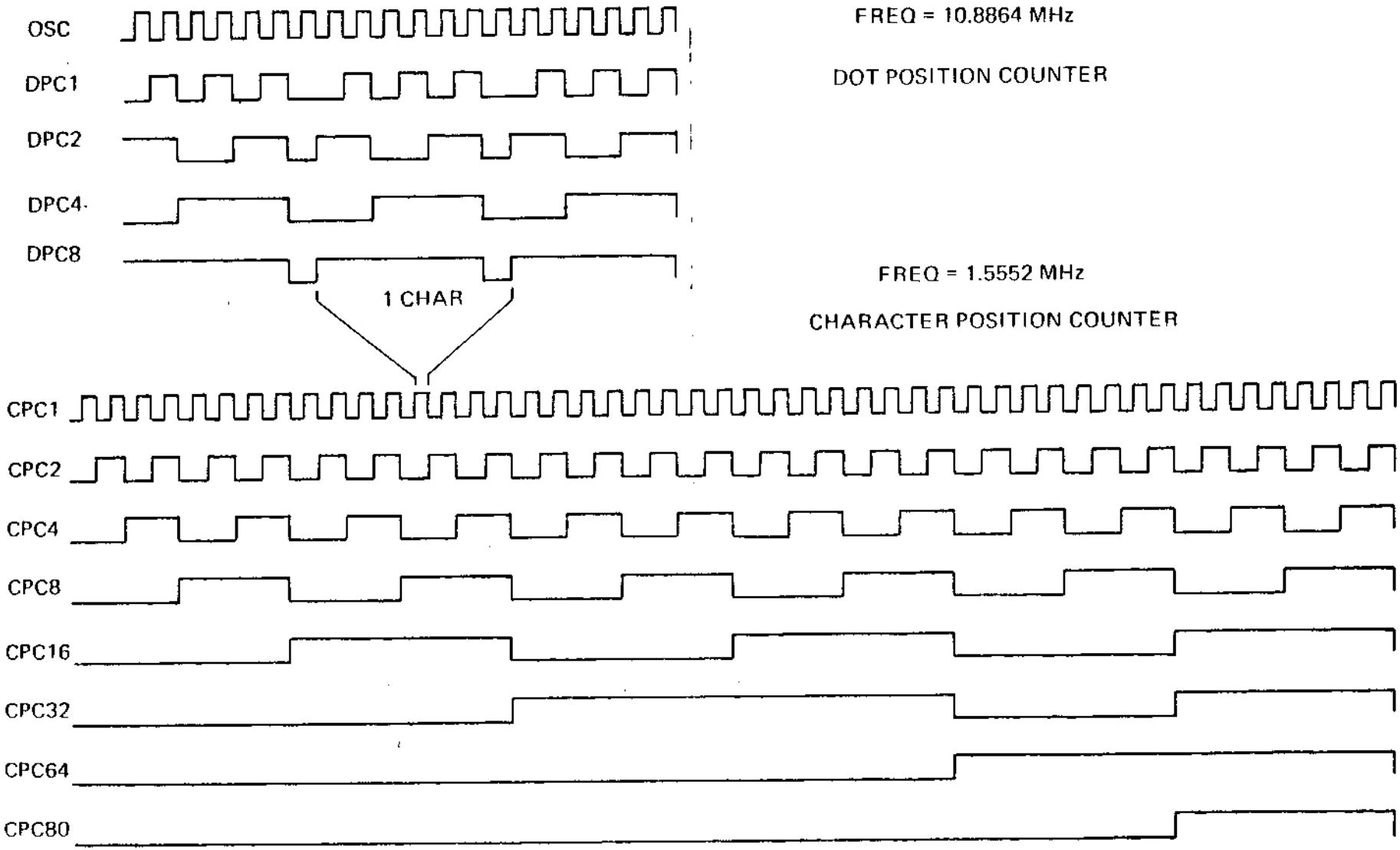

FIGURE 4-6 TIMING DIAGRAM

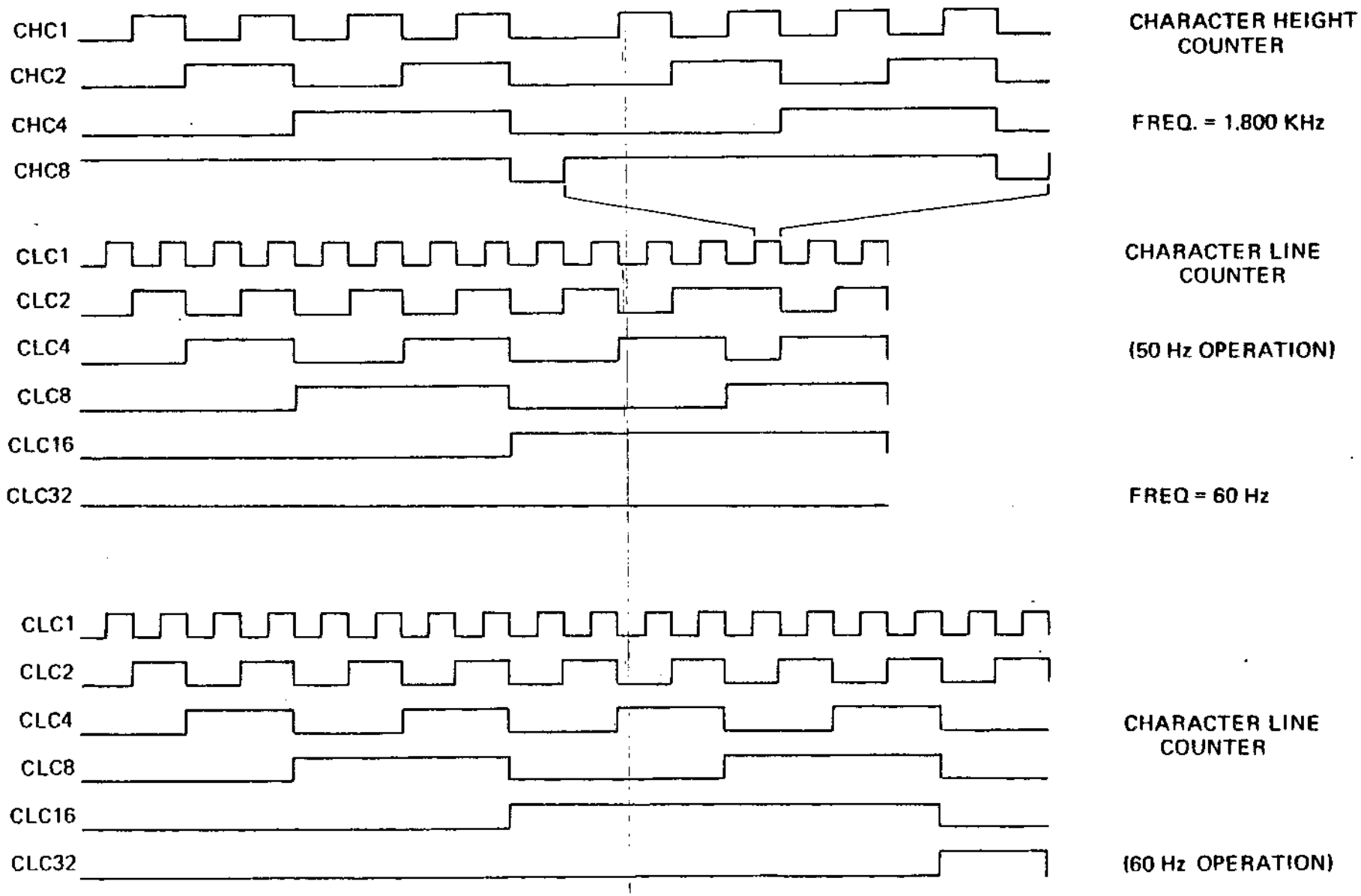

FIGURE 4-7 TIMING DIAGRAM

4.3.9 Memory

The page memory is actually a 2048 byte memory. Each byte consists of 9 bits: 7 for data, one for protect, and one for blink. Of these 2048 bytes, 1920 are displayable. The program does not have the capability of displaying or writing into the remaining 128. In order to write data into the page memory from the receiver, the memory address is muxed over to the cursor location registers and the signal WRITE is generated. The UART is then reset and is capable of receiving the next character. The page memory output is sent to the character generator input buffer at the proper time to generate the displayable characters. The program has the capability of shutting down the screen refresh for any given operation to increase the program operating time.

4.3.10 Character Generator

The Character Generator is a read-only memory (ROM) that is addressed by the character (in ASCII). The scan configuration and the character indicates the pattern desired on that scan. Five-bit dot patterns are generated which form a portion of a character. The output of the character generator is applied to the parallel-to-serial video shift register.

4.3.11 Video Shift Register

The parallel-to-serial Video Shift Register is loaded with data by the low-active signal, DPC8, and is clocked by the main oscillator output. The dots are shifted out, mixed with cursor information, and blanking signals, and applied to the monitor through the CONTRAST control as video information.

4.3.12 Input/Output Operations UART (Receiver)

Data can be received by the B100 from one of three sources; from the I/O interface into the receive side of the UART or from the keyboard through the transmit side of the UART to the receive side of the UART.

The UART is driven by a clock generated internally off the main counter chain. No separate oscillator is required. A rotary switch located on the back panel switches the clock rate for operation from 75 to 19200 baud. The times 16 clock is then applied to the transmitter and receiver of the UART.

The EIA line receiver receives data at RS 232C levels and gates them into the UART when the B100 is on-line. Through the same gating, data is brought in from the transmit side of the UART. The data is brought into the UART where it is converted to parallel (seven bits) data.

4.3.13 UART (Transmit)

The keyboard data lines for bits 1 through 7 are applied to the transmit input data lines along with the seven BUS lines. Also coming from the keyboard circuit is a load signal which triggers the UART to initiate the transmission. As the UART receives the character for transmission, it performs the appropriate parity generation, provides one or two stop bits, divides the X16 clock to get the baud rate, and transmits the character. The character is applied through an EIA RS 232C interface to the computer or modem. Also coming from the UART is output data at a TTL level which is applied to the receiver side of the UART through the previously mentioned logic. The EIA interface includes a Data Terminal Ready signal which indicates the status of the B100 to the computer and a Request to Send signal which indicates that the terminal has data to send to the computer. The Clear-to-Send line coming from the computer is monitored at the EIA RS 232C interface levels. It is received by a line receiver which converts it to TTL levels and applies it to the UART clock control circuit to control transmission. An optional times 8 clock (TTL levels) is available as part of the interface. The BREAK key is on the keyboard and enables a timer which holds the transmit data line in a spacing condition for a predetermined length of time.

4.3.14 Block Send Circuit

The Block Send feature allows the operator to compose a message on the terminal screen and then, by depressing the SEND key, cause the terminal to send the entire message to the computer at the selected baud rate.

The sequence of operations is described in Figure 4-1.

The operation is as follows:

1. Raise Request-to-Send
2. When Clear-to-Send, send STX (ØØ2) header.
3. Send data
4. If FORMAT and END OF PROTECTED FIELD, send HT code (ØØ5).
5. If not FORMAT and END of LINE, send CR/LF sequence.
6. When end of message, send ETX (ØØ3)
7. Time out and drop Request-to-Send.

4.3.15 Auxiliary Send Circuit

The Aux Send feature is identical to the Block Send except for two points:

1. The message is transmitted out the AUX Port instead of the Main I/O Port.
2. The delimiters sent at the start of message, end of unprotected field (135), end of line (134), and ETX (ØØ3) are selected from a different portion of the Block Send ROM.

4.3.16 Special Function (F1-F16)

Sends a code sequence to the computer from the terminal. The code is instigated by pressing any one of the 16 function keys.

1. An STX is transmitted (ØØ2)
2. An Escape code (Ø33)
3. Code character (see ASCII Code Chart Table 3-2)
4. And ends with an ETX (ØØ3)

SECTION V

Maintenance

5.1 INTRODUCTION

This section contains information to aid in the maintenance of the B100 Terminal. Preventive and corrective maintenance procedures are specified as well as troubleshooting aids and techniques.

5.2 PREVENTIVE MAINTENANCE

No scheduled periodic maintenance is required. However, several precautions can be taken periodically to ensure proper operation. Care should be exercised to see that there is proper air circulation for the fan. The terminal should not be placed on a shag carpet or other soft surface that could impede the air entrance to the fan. Special care must be taken to ensure that no paper or other loose articles are placed under the terminal. The degree of dust density in the air should be considered in selecting the location of the terminal.

The interior of the unit may be wiped free of dust. Accumulation of dirt causes overheating and component breakdown. Dirt acts as an insulating blanket and prevents efficient heat dissipation. A small brush is very useful for dislodging dirt; a cotton-tipped applicator is good for narrow or hard to get places.

The following is a list of the troubleshooting aids that are provided in this manual to assist in the troubleshooting of functional failures.

Circuit Schematics	
Detail Block Diagram	(See Section IV,
Functional Flow Diagram	Figures 1, 2 & 3)
Timing Diagrams	(See Section IV, Figures 6 & 7)
Glossary of Terms	(See Appendix)
Troubleshooting Flow Diagrams	
Disassembly/Assembly Procedures	
Adjustment Procedures	
Configuration/Strapping Information	(See Section II)
Character Dot Matrix	(See Section IV, Figure 5)

5.2.1 Troubleshooting Equipment

The following is a list of tools and standard equipment required to repair a B100 Terminal:

V/O Multimeter
Oscilloscope
Assorted Electronic Hand Tools

5.3 CORRECTIVE MAINTENANCE

This section provides corrective maintenance information to aid in servicing the B100 Terminal. It is suggested that the configuration sheet and the turn-on procedure be consulted before performing the corrective maintenance described here. See page 3-1.

5.3.1 Troubleshooting Preliminary Considerations

The most common problem occuring in B100 are switch, control and operation-related. A simple procedure may be followed to help determine if the problem is control and/or operation-related or internal circuitry related by checking the following:

Illegal Operation (Refer to Section II)
Improper Baud Rate Setting
Wrong Transmit or Receive Mode
Loose Interconnect Cable

5.3.2 Troubleshooting Flow Diagrams

A list of trouble-shooting flow diagrams is given in Table 5-1. This index lists apparent failure and refers the user to the proper flow diagram. The Table is only intended to allow the user to varify the component where trouble exists, and not to indicate the specific problem. The user is advised to swap the defective component and have that component repaired or replaced by an authorized service agent.

1. Find the apparent trouble in the Troubleshooting Flow Diagram Index.

2. Proceed to the specified Troubleshooting Flow Diagram in the diagram section and begin the troubleshooting procedure.

3. If an adjustment procedure is referenced in the Troubleshooting Flow Diagram, perform the adjustment and return to the flow diagram to complete the troubleshooting process.

4. Reference is made to Timing diagrams contained in (Section VI) this manual.

5.3.3 Full-Duplex Echoplex Test

A specially wired connector may be assembled that will allow the operator to perform this test. This connector tester allows the terminal to be operated and tested independent of an external data device. The connector mates with the Main I/O Port. Set-up for the test is as follows:

FDX (Full Duplex Mode)
Baud Rate -- Any Setting
Test Connector Installed in the I/O Port

Enter data from the keyboard as you would if you were on-line to a computer. If data is displayed on the screen properly, then the B100 is transmitting and receiving data properly.

The Test Connector is wired as follows: (Refer to Figure 5.1.)

Connects Transmitted Data Line out of the terminal to received data line into the terminal. Pin 2 to Pin 3 of the I/O Port.

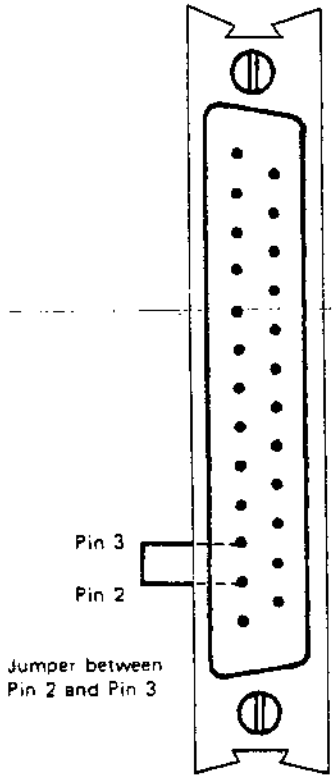

Amphenol Male Type Connector

Beehive Part No. 606-0011-25 AP

Amphenol Part No. 17-20250-1

Figure 5-1
ECHOPLEX TEST CONNECTOR

Table 5-1. Troubleshooting Flow Diagram Index

Apparent Failure	Troubleshooting Flow Diagram
GENERAL	
No raster present	5-1A
No raster present	5-1B
OFF LINE	
Cursor either absent, multiple cursors, cursor not in home position or screen filled with video blocks	5-2A
No character displayed when written, non cursor advance	5-2B
Wrong character displayed	5-2C
No escape functions	5-2D
No control functions	5-2E
ON LINE	
No data being transmitted	5-3A
Transmits invalid data	5-3B
No reception	5-3C
Receives invalid data and/or improper parity	5-3D
DISPLAY	
All displayed characters out of focus	5-4A
Rolling display	5-4B
Display too tall/short for screen size	5-4C
Height of displayed characters uneven	5-4D
Display too wide/narrow for screen size	5-4E
Display not centered	5-4F
Tilted display	5-4G
Others A. Single vertical line B. Physical damage C. Dot in center of screen D. Uneven intensity/focus E. Burned phosphor F. Uneven display dimensions G. Excessive H.V. Arcing	5-4H

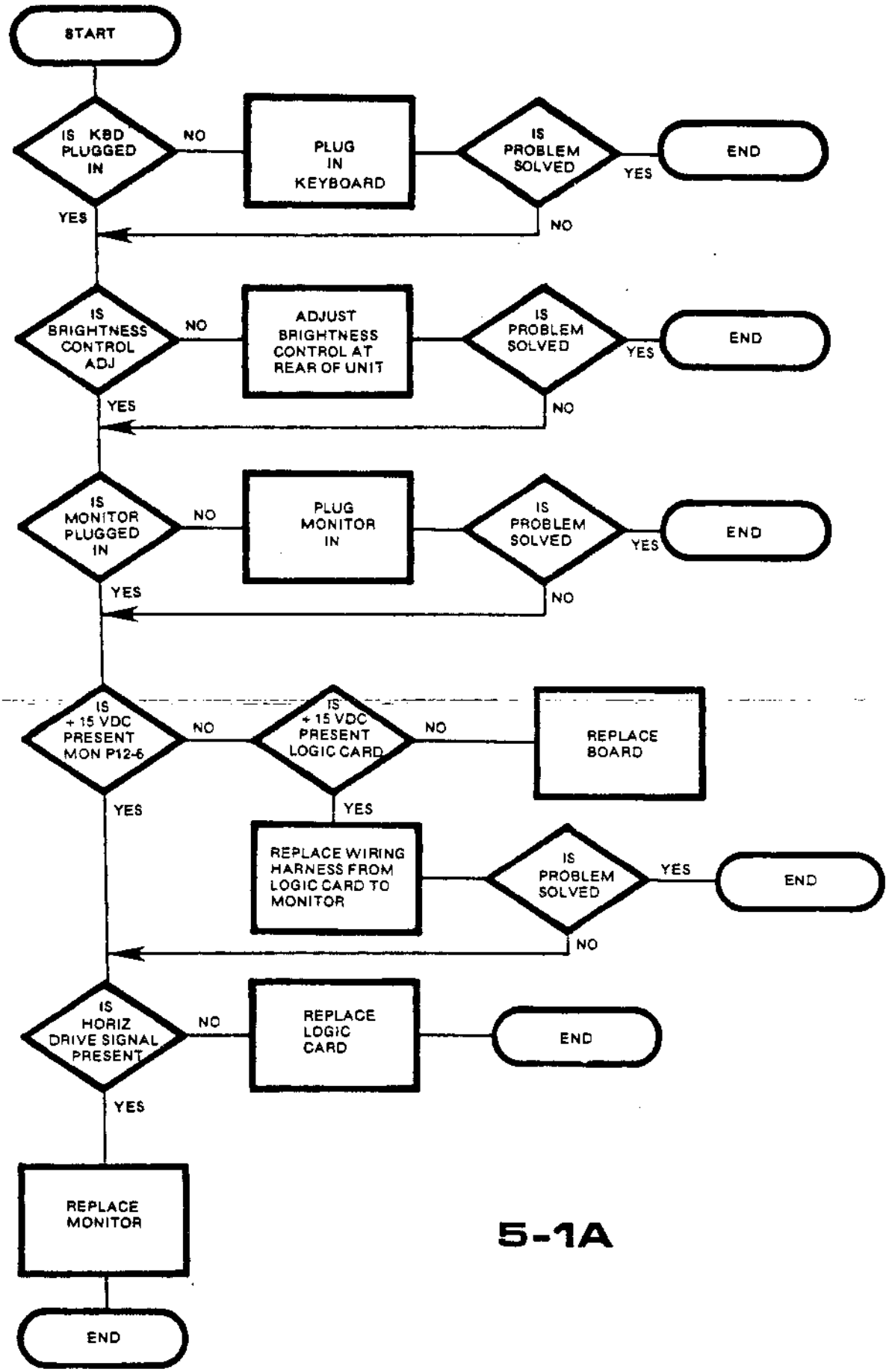
START
IS KBD PLUGGED IN
NO
PLUG IN KEYBOARD
IS PROBLEM SOLVED
YES
END
YES
NO
IS BRIGHTNESS CONTROL ADJ
NO
ADJUST BRIGHTNESS CONTROL AT REAR OF UNIT
IS PROBLEM SOLVED
YES
END
YES
NO
IS MONITOR PLUGGED IN
NO
PLUG MONITOR IN
IS PROBLEM SOLVED
YES
END
YES
NO
IS + 15 VDC PRESENT MON P12-6
NO
IS + 15 VDC PRESENT LOGIC CARD
NO
REPLACE BOARD
YES
YES
REPLACE WIRING HARNESS FROM LOGIC CARD TO MONITOR
IS PROBLEM SOLVED
YES
END
NO
IS HORIZ DRIVE SIGNAL PRESENT
NO
REPLACE LOGIC CARD
END
YES
REPLACE MONITOR
END

5-1A

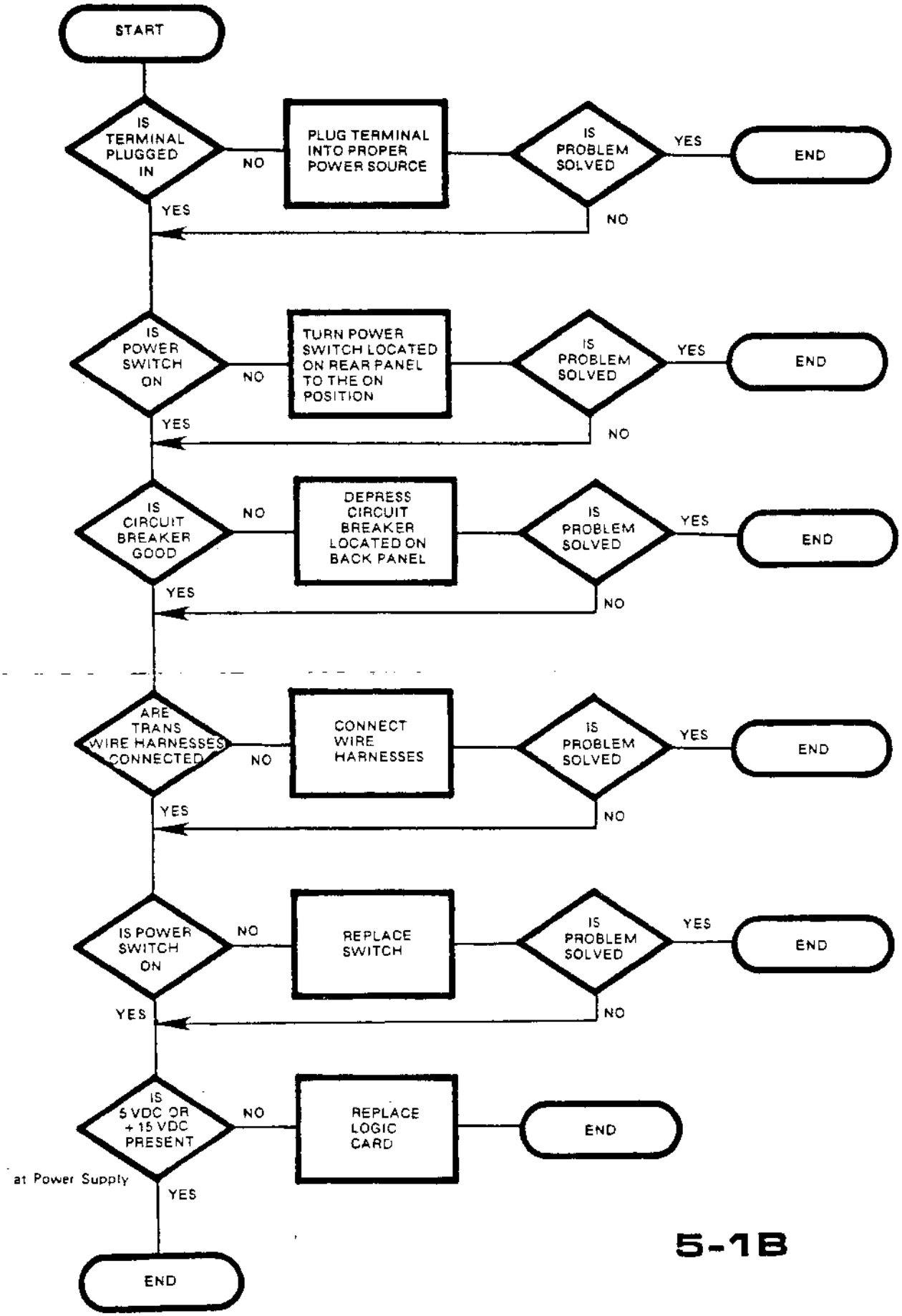
START
IS TERMINAL PLUGGED IN
NO
PLUG TERMINAL INTO PROPER POWER SOURCE
IS PROBLEM SOLVED
YES
END
NO
YES
IS POWER SWITCH ON
NO
TURN POWER SWITCH LOCATED ON REAR PANEL TO THE ON POSITION
IS PROBLEM SOLVED
YES
END
NO
YES
IS CIRCUIT BREAKER GOOD
NO
DEPRESS CIRCUIT BREAKER LOCATED ON BACK PANEL
IS PROBLEM SOLVED
YES
END
NO
YES
ARE TRANS WIRE HARNESSES CONNECTED
NO
CONNECT WIRE HARNESSES
IS PROBLEM SOLVED
YES
END
NO
YES
IS POWER SWITCH ON
NO
REPLACE SWITCH
IS PROBLEM SOLVED
YES
END
NO
YES
IS 5 VDC OR +15 VDC PRESENT at Power Supply
NO
REPLACE LOGIC CARD
END
YES
END

5-1B

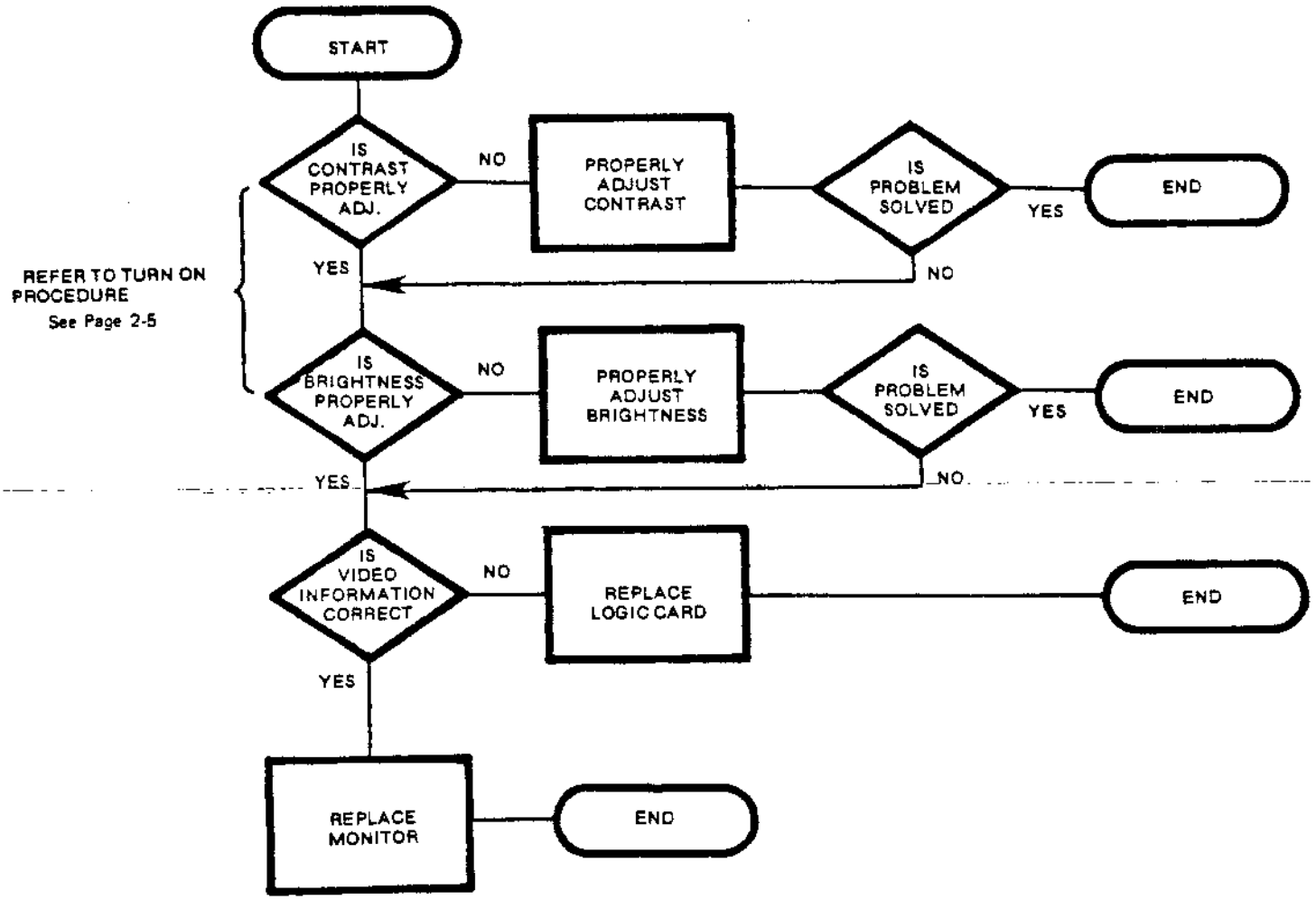
START
IS CONTRAST PROPERLY ADJ.
NO
PROPERLY ADJUST CONTRAST
IS PROBLEM SOLVED
YES
END
NO
YES
REFER TO TURN ON PROCEDURE
See Page 2-5
IS BRIGHTNESS PROPERLY ADJ.
NO
PROPERLY ADJUST BRIGHTNESS
IS PROBLEM SOLVED
YES
END
NO
YES
IS VIDEO INFORMATION CORRECT
NO
REPLACE LOGIC CARD
END
YES
REPLACE MONITOR
END

5-2A

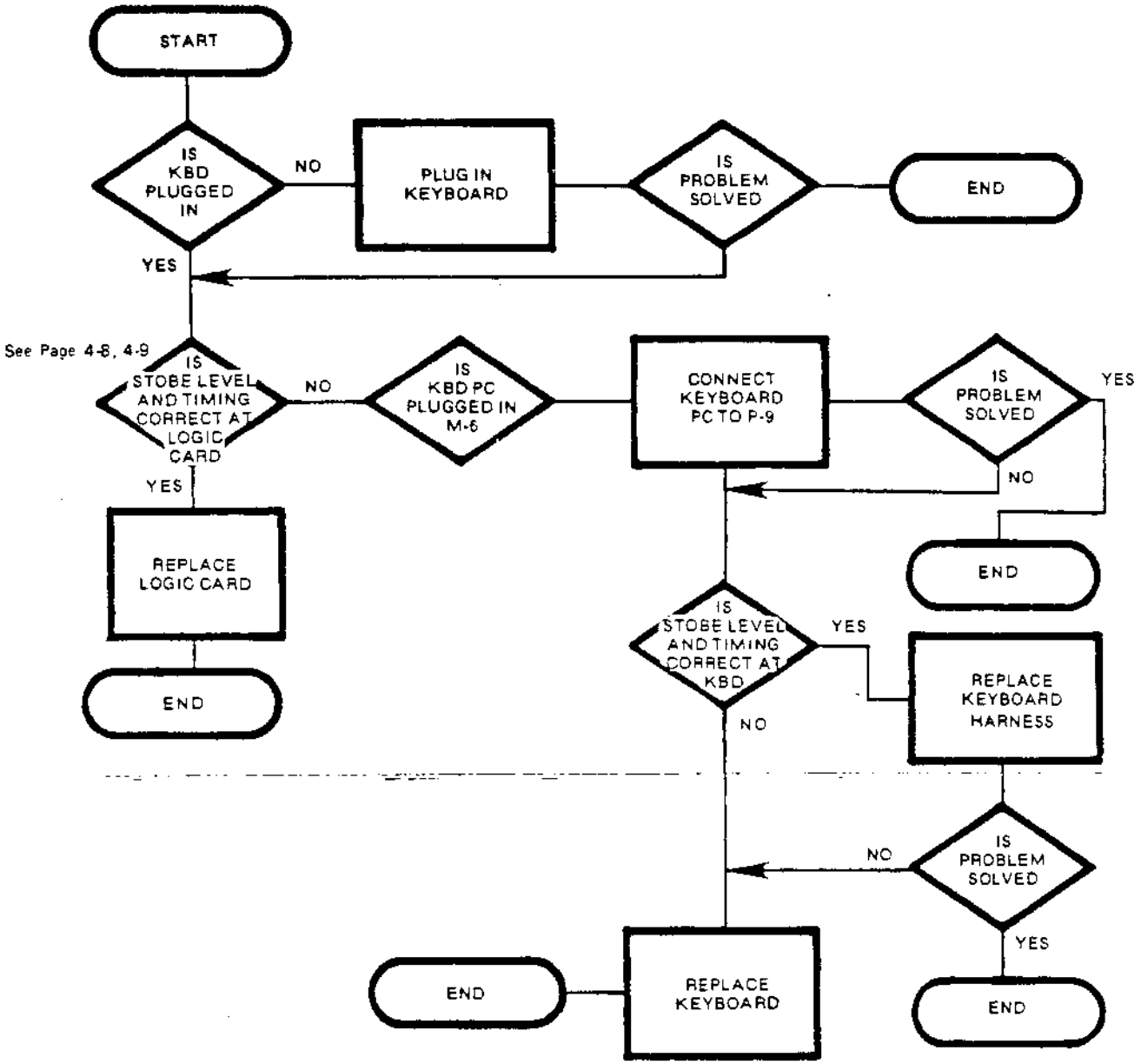
START
IS KBD PLUGGED IN
NO
PLUG IN KEYBOARD
IS PROBLEM SOLVED
END
YES
See Page 4-8, 4-9
IS STOBE LEVEL AND TIMING CORRECT AT LOGIC CARD
NO
IS KBD PC PLUGGED IN M-6
CONNECT KEYBOARD PC TO P-9
IS PROBLEM SOLVED
YES
NO
END
YES
REPLACE LOGIC CARD
END
IS STOBE LEVEL AND TIMING CORRECT AT KBD
YES
REPLACE KEYBOARD HARNESS
NO
IS PROBLEM SOLVED
NO
YES
END
REPLACE KEYBOARD
END

5-2B

5-2C, D, E

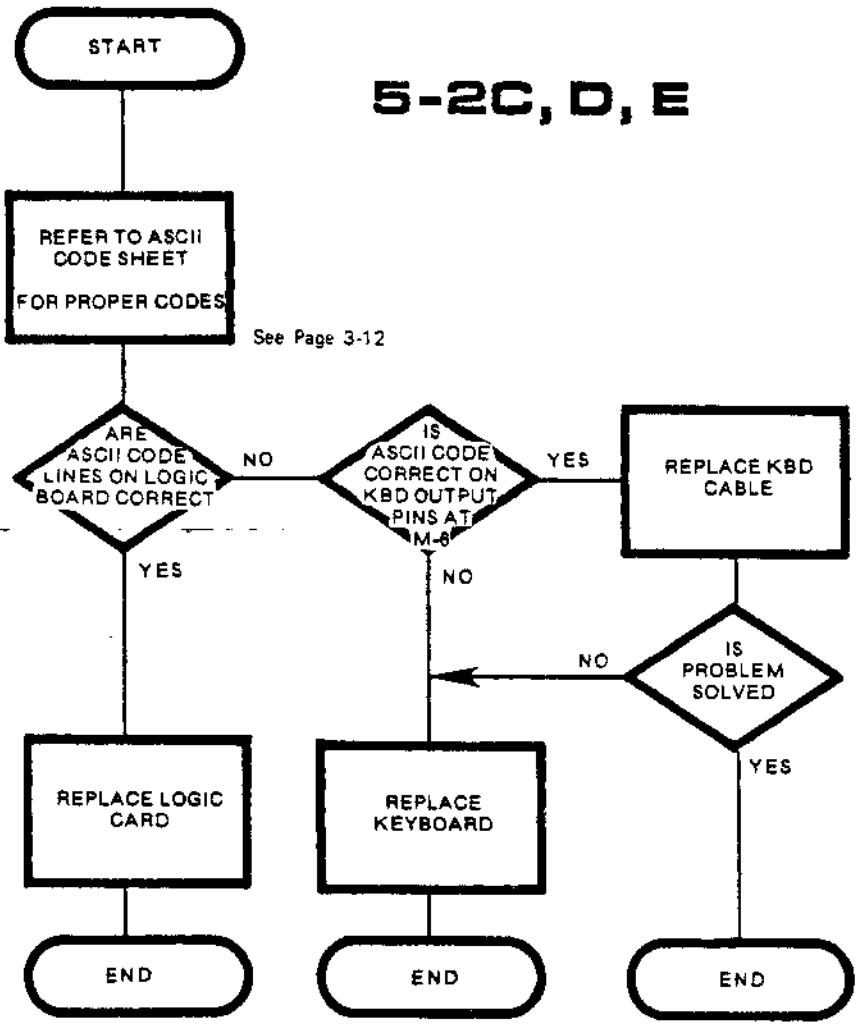
START
REFER TO ASCII CODE SHEET FOR PROPER CODES
See Page 3-12
ARE ASCII CODE LINES ON LOGIC BOARD CORRECT
NO
IS ASCII CODE CORRECT ON KBD OUTPUT PINS AT M-6
YES
REPLACE KBD CABLE
YES
NO
IS PROBLEM SOLVED
NO
YES
REPLACE LOGIC CARD
REPLACE KEYBOARD
END
END
END

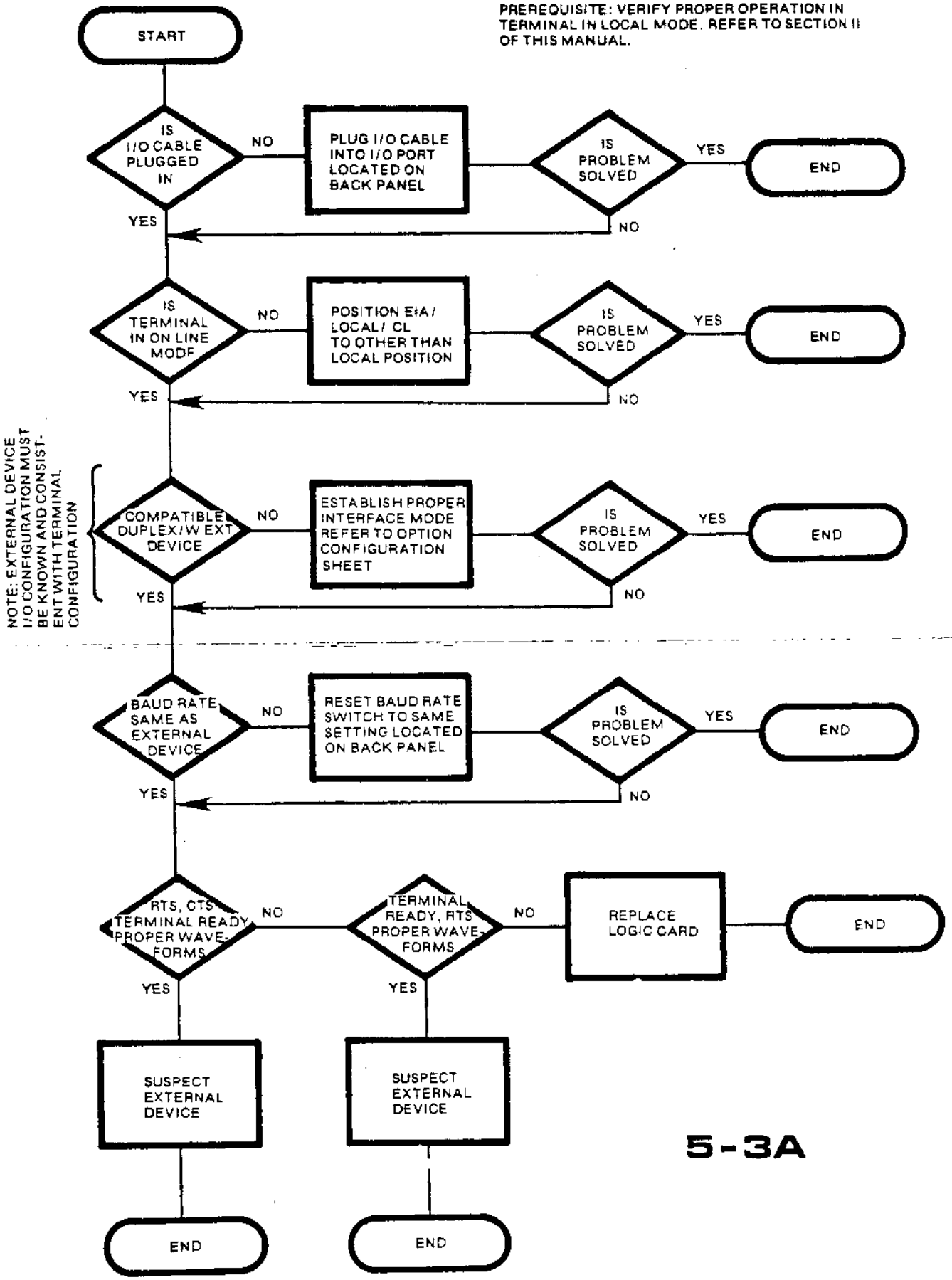
PREREQUISITE: VERIFY PROPER OPERATION IN TERMINAL IN LOCAL MODE. REFER TO SECTION II OF THIS MANUAL.
START
IS I/O CABLE PLUGGED IN
NO
PLUG I/O CABLE INTO I/O PORT LOCATED ON BACK PANEL
IS PROBLEM SOLVED
YES
END
NO
YES
IS TERMINAL IN ON LINE MODE
NO
POSITION EIA/ LOCAL/ CL TO OTHER THAN LOCAL POSITION
IS PROBLEM SOLVED
YES
END
NO
YES
NOTE: EXTERNAL DEVICE I/O CONFIGURATION MUST BE KNOWN AND CONSISTENT WITH TERMINAL CONFIGURATION
COMPATIBLE DUPLEX/W EXT DEVICE
NO
ESTABLISH PROPER INTERFACE MODE REFER TO OPTION CONFIGURATION SHEET
IS PROBLEM SOLVED
YES
END
NO
YES
BAUD RATE SAME AS EXTERNAL DEVICE
NO
RESET BAUD RATE SWITCH TO SAME SETTING LOCATED ON BACK PANEL
IS PROBLEM SOLVED
YES
END
NO
YES
RTS, CTS TERMINAL READY PROPER WAVE-FORMS
NO
TERMINAL READY, RTS PROPER WAVE-FORMS
NO
REPLACE LOGIC CARD
END
YES
YES
SUSPECT EXTERNAL DEVICE
SUSPECT EXTERNAL DEVICE
END
END

5-3A

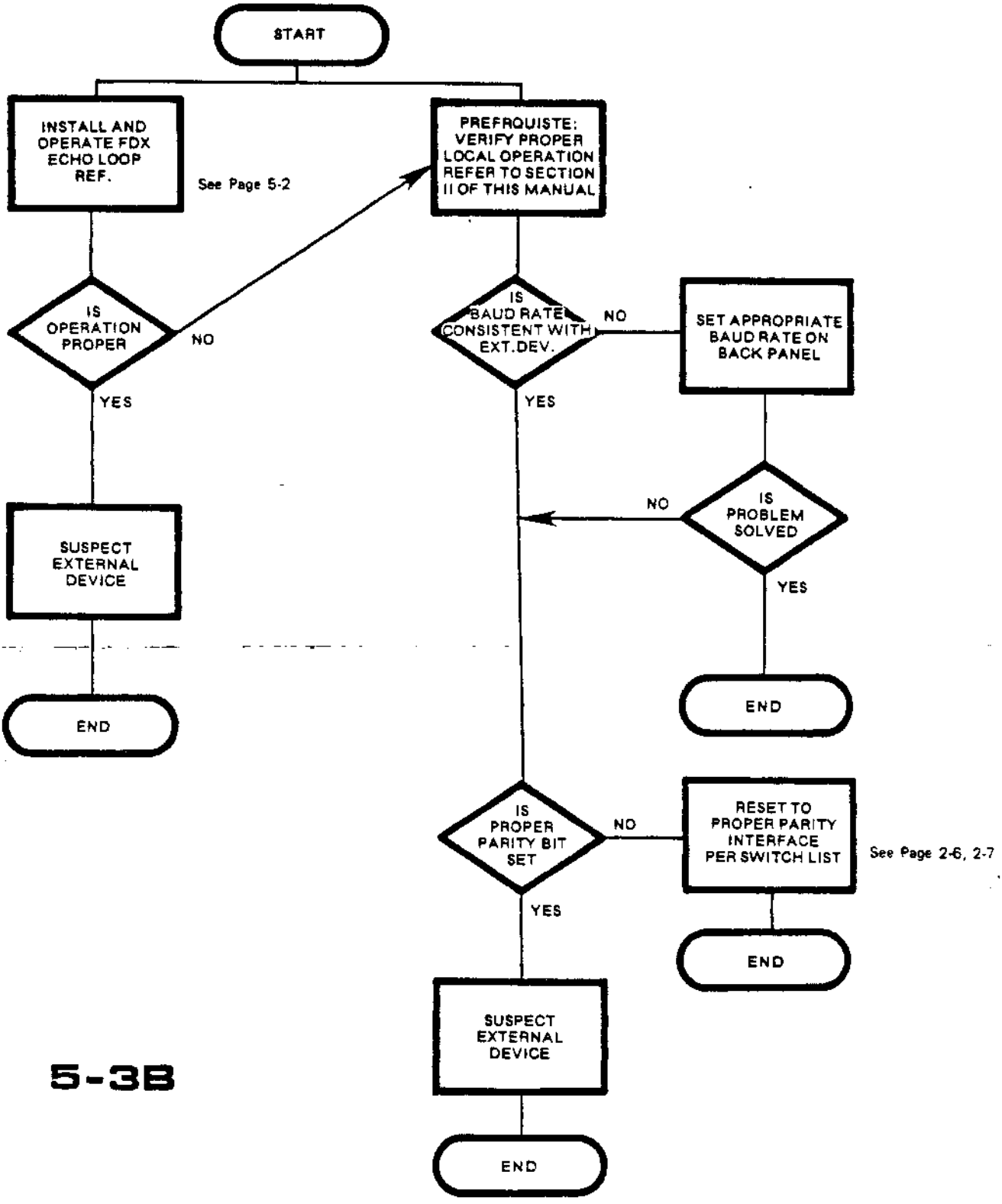
START
INSTALL AND OPERATE FDX ECHO LOOP REF.
See Page 5-2
PREFRQUISTE: VERIFY PROPER LOCAL OPERATION REFER TO SECTION II OF THIS MANUAL
IS OPERATION PROPER
NO
YES
IS BAUD RATE CONSISTENT WITH EXT.DEV.
NO
SET APPROPRIATE BAUD RATE ON BACK PANEL
YES
NO
IS PROBLEM SOLVED
YES
SUSPECT EXTERNAL DEVICE
END
END
IS PROPER PARITY BIT SET
NO
RESET TO PROPER PARITY INTERFACE PER SWITCH LIST
See Page 2-6, 2-7
YES
END
SUSPECT EXTERNAL DEVICE
END

5-3B

PREREQUISITE: VERIFY PROPER OPERATION OF TERMINAL IN LOCAL MODE. REFER TO SECTION II OF THIS MANUAL.

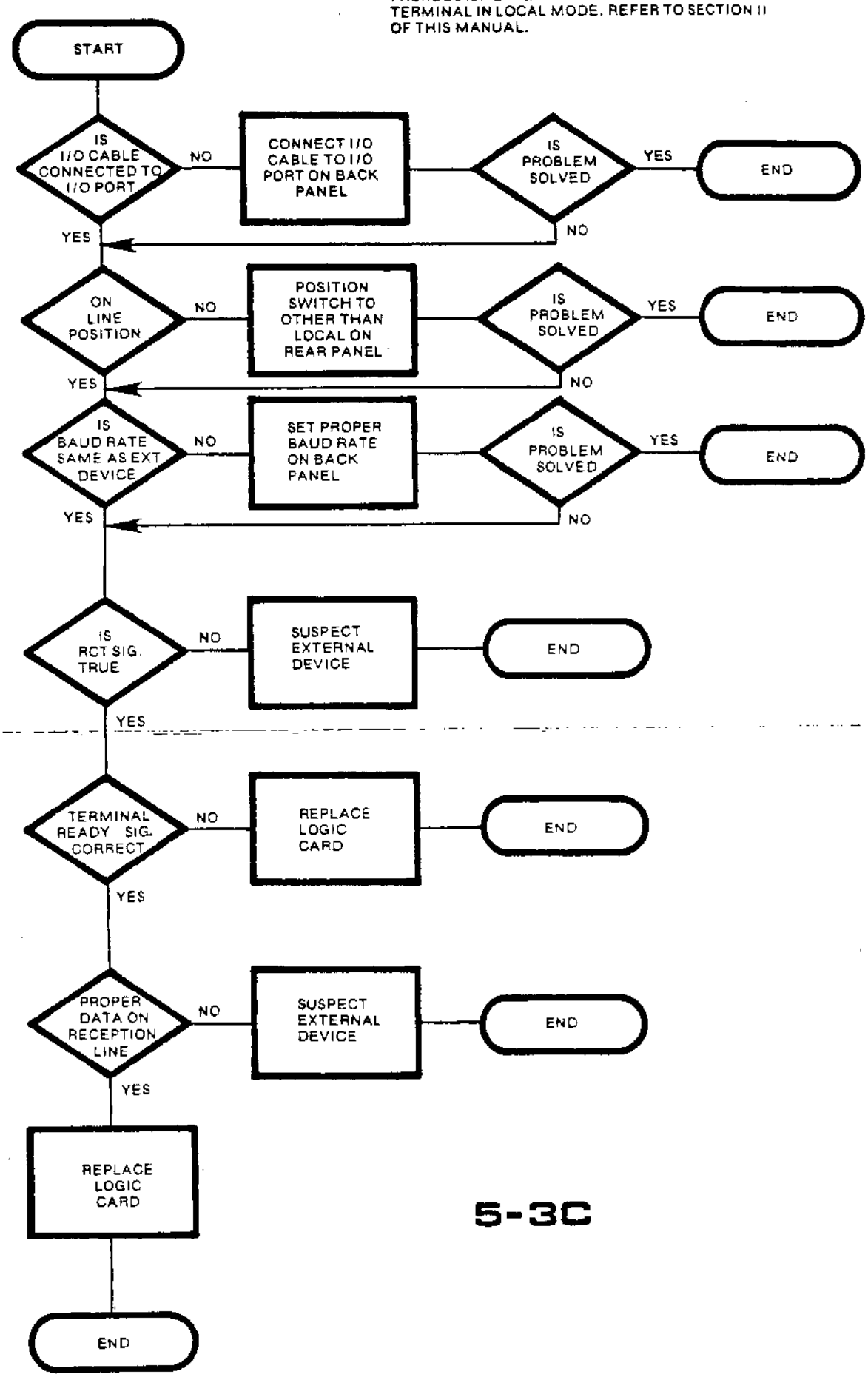

5-3C

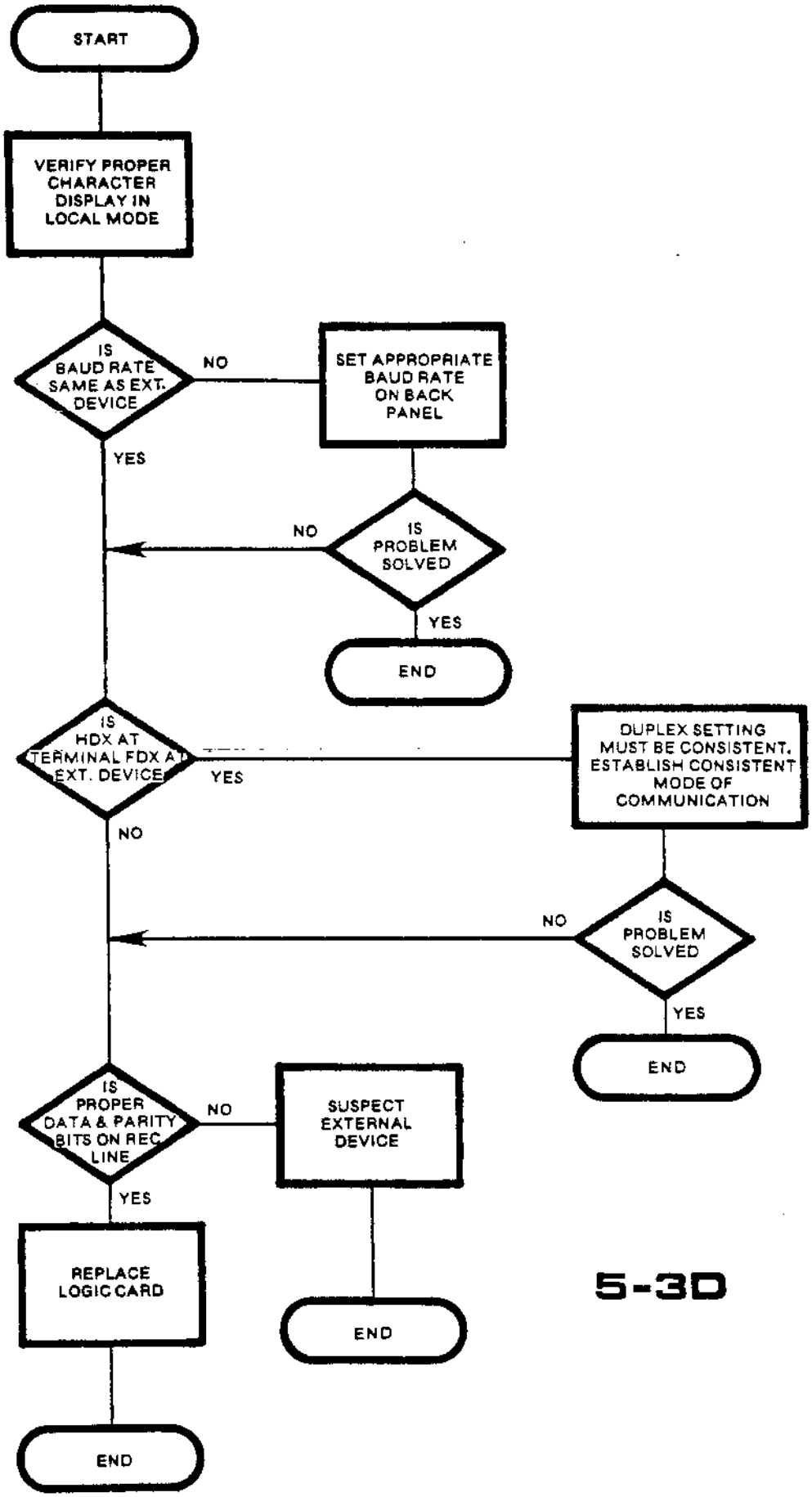
START
VERIFY PROPER CHARACTER DISPLAY IN LOCAL MODE
IS BAUD RATE SAME AS EXT. DEVICE
NO
SET APPROPRIATE BAUD RATE ON BACK PANEL
YES
NO
IS PROBLEM SOLVED
YES
END
IS HDX AT TERMINAL FDX AT EXT. DEVICE
YES
DUPLEX SETTING MUST BE CONSISTENT. ESTABLISH CONSISTENT MODE OF COMMUNICATION
NO
NO
IS PROBLEM SOLVED
YES
END
IS PROPER DATA & PARITY BITS ON REC. LINE
NO
SUSPECT EXTERNAL DEVICE
YES
REPLACE LOGIC CARD
END
END

5-3D

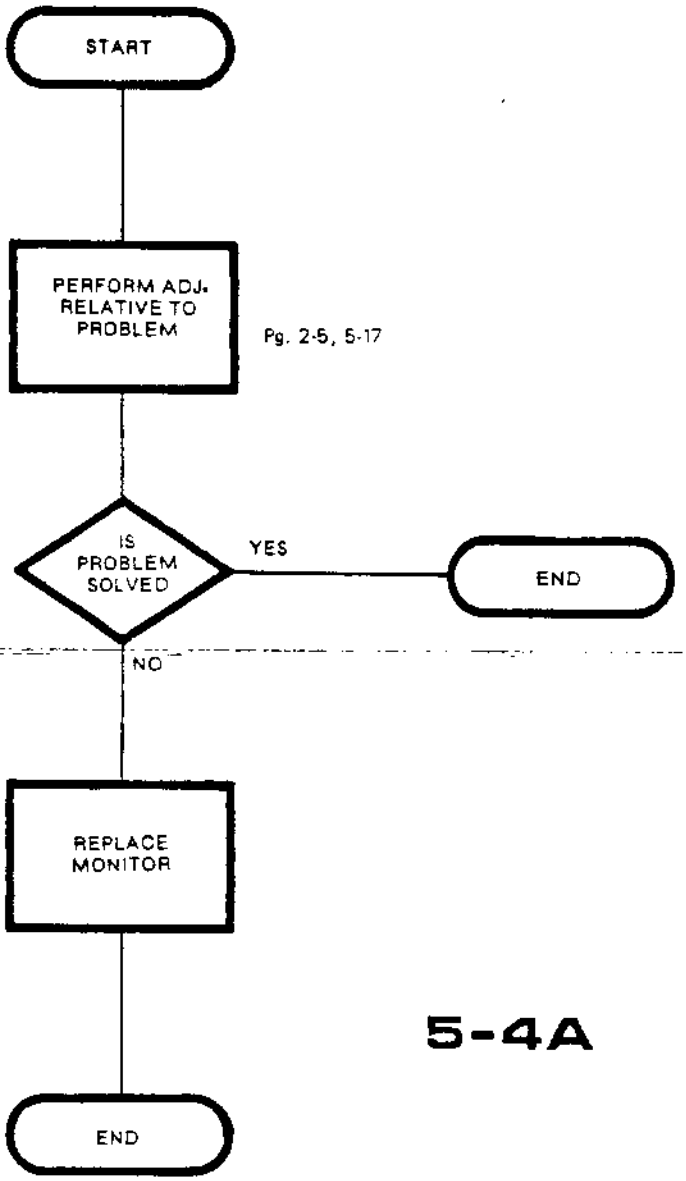
START
PERFORM ADJ. RELATIVE TO PROBLEM
Pg. 2-5, 5-17
IS PROBLEM SOLVED
YES
END
NO
REPLACE MONITOR
END

5-4A

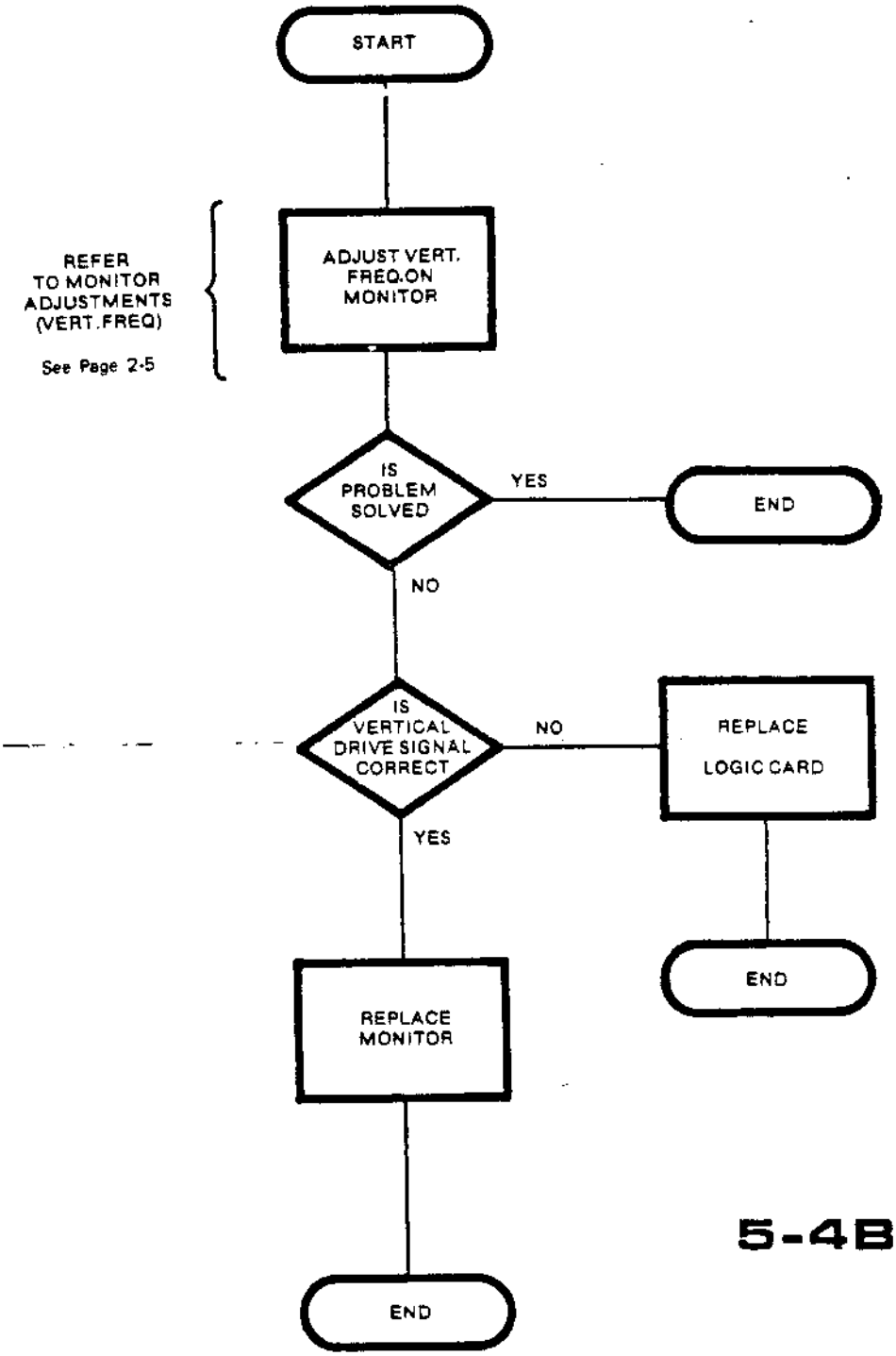
START
REFER TO MONITOR ADJUSTMENTS (VERT.FREQ)
See Page 2-5
ADJUST VERT. FREQ.ON MONITOR
IS PROBLEM SOLVED
YES
END
NO
IS VERTICAL DRIVE SIGNAL CORRECT
NO
REPLACE LOGIC CARD
END
YES
REPLACE MONITOR
END

5-4B

5-4C, D, E, F, G

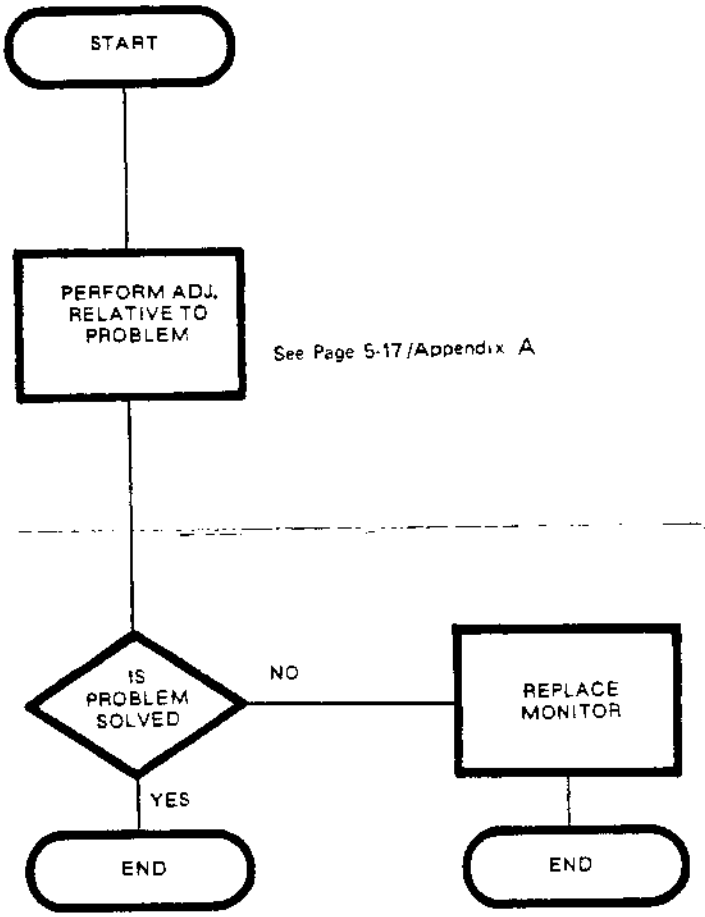
START
PERFORM ADJ. RELATIVE TO PROBLEM
See Page 5-17/Appendix A
IS PROBLEM SOLVED
NO
REPLACE MONITOR
YES
END
END

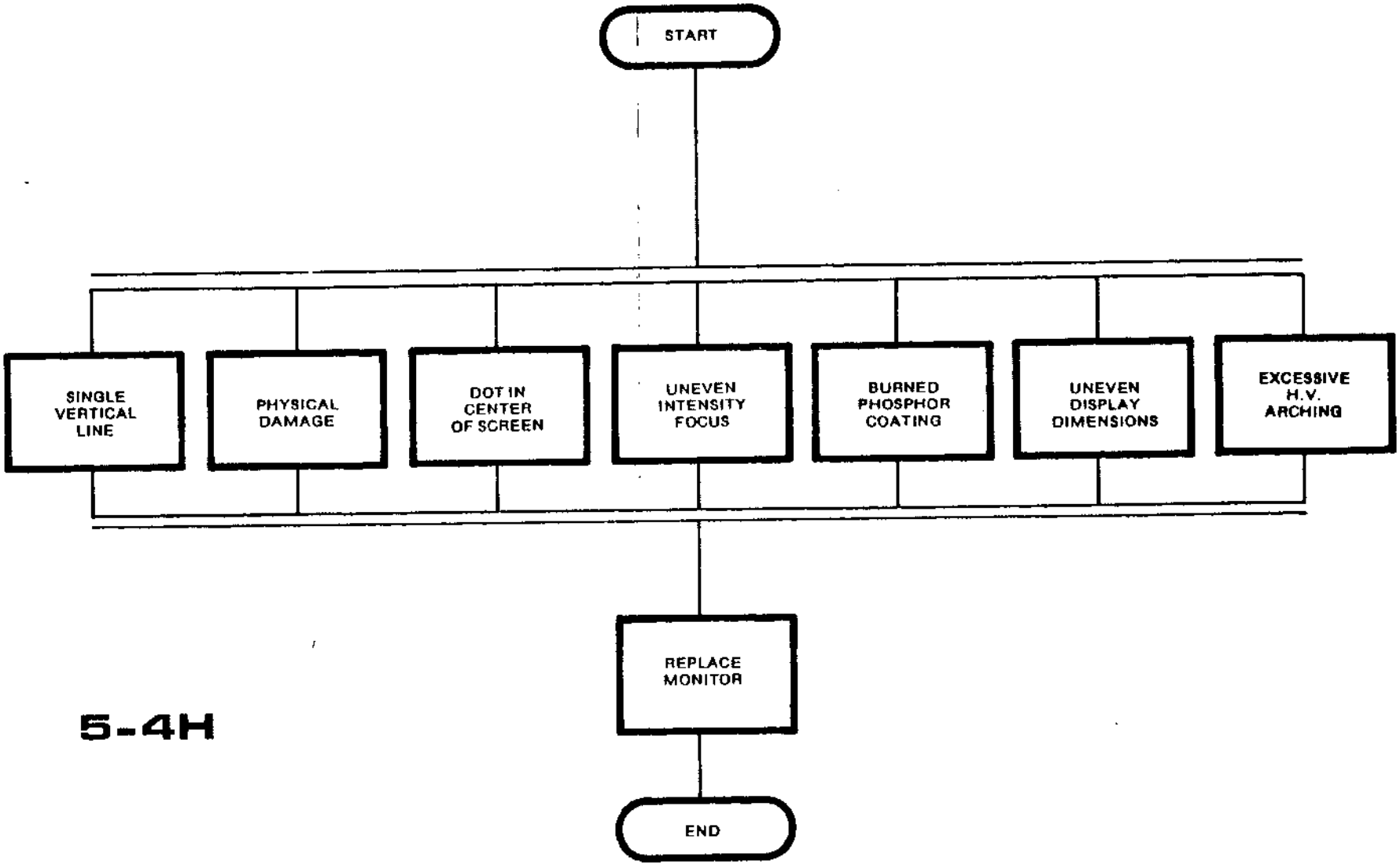
START
SINGLE VERTICAL LINE
PHYSICAL DAMAGE
DOT IN CENTER OF SCREEN
UNEVEN INTENSITY FOCUS
BURNED PHOSPHOR COATING
UNEVEN DISPLAY DIMENSIONS
EXCESSIVE H.V. ARCHING
REPLACE MONITOR
END

5-4H

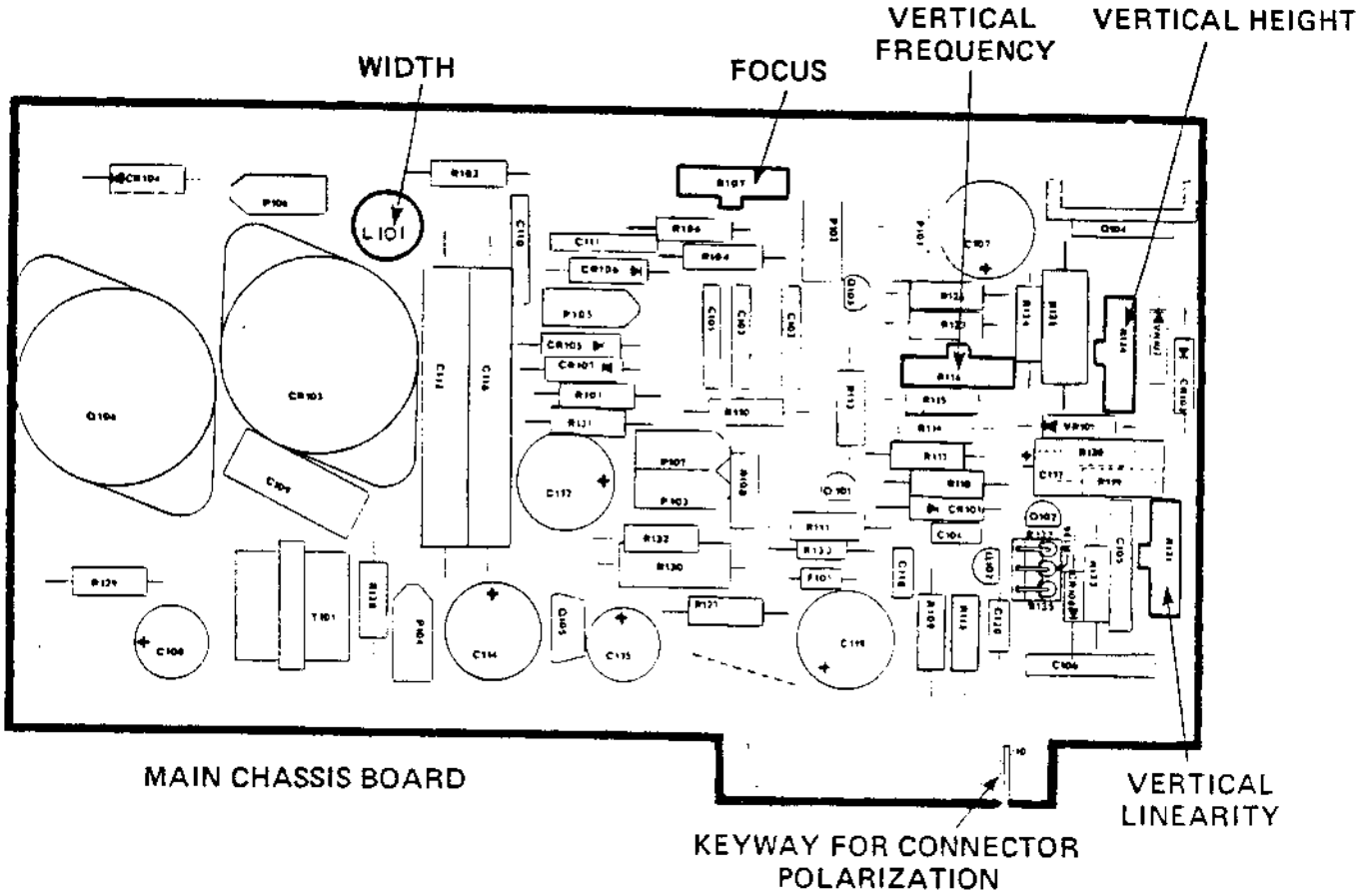

MONITOR ADJUSTMENTS FIGURE 5.2

5.4 MONITOR ADJUSTMENTS

The following adjustments should be made while the monitor is in the B100 terminal.

The adjustments that follow should be done with the terminal case removed. A drawing of the Monitor PC Board adjustment points is shown in Figure 5-2, while other monitor adjustments are made from the back panel of the terminal.

Brightness
Contrast
Vertical Adjustments
Focus
Centering

WARNING: The Monitor employs high voltages. Care should be used in making any adjustments as power will be applied to the Monitor.

The brightness & contrast controls (located on the back panel) should be positioned to a point where the white raster on the CRT is extinguished. Fill the screen of the CRT with characters from the keyboard and adjust the contrast control for the sharpest display of the characters in the upper left hand side of the screen.

The vertical frequency control (R 116, Figure 5-5) is set to the approximate mechanical mid-point initially. This adjustment will correct for a rolling display and should be adjusted to correct that symptom alone. No discrete measurement is necessary, except for a visual observation as to the steadiness of the display.

Fill the screen again with characters. The vertical height control (R 124, Figure 5-2) should be adjusted 6½ inches from the top of the characters on the first row to the bottom of the characters on the last row in the center of the display.

The vertical linearity control (R 121, Figure 5-2) should be adjusted so the characters on the first row are equally as tall as the characters on the last row. Their height should be approximately 0.18 inches (46 mm).

If the screen is blank, fill it with characters and adjust the horizontal width coil (L101, Figure 5.2) for 8½ inches (21.6 cm) from the left margin to the right margin of the display characters.

The horizontal linearity is adjusted to correct for the compression of the display on the left hand side of the screen. To correct this, loosen the clamp securing the yoke and slide the cardboard sleeve in or out to give uniform width to the characters on the right and left borders of the display.

Adjust the focus control (R 107, Figure 5-2) for best overall display focus. It may be necessary to readjust the contrast control and repeat this step.

Centering of the display is accomplished by rotating the small permanent magnets glued behind the deflection yoke. Magnets should be removed and reglued with silicone adhesive. If the display as a whole is tilted, correction may be accomplished by rotating the entire yoke.

Additional descriptions and adjustments can be found in Appendix A.

5.5 DISASSEMBLY PROCEDURE B100

The B100 disassembles into replacable components: The Keyboard, Monitor Assembly, Logic Board, and Fan. All Major components can be removed and replaced quickly. An accompanying diagram Figure 5-3, shows major assembly sections and their interrelation. The following explanations relate to this diagram.

5.5.1 Case Removal

The reinforced fiber case is one piece and is fastened to the chassis with six screws and lock washers. The screws are located: Two on the front of the case below the keyboard, and four screws in the back of the case surrounding the black rear panel. Lift the case straight up for removal.

Assemble in the reverse order.

5.5.2 Logic Board Removal

Place the terminal in an upside down position on a soft surface to avoid damage. Remove the (5) screws and lock washers that secure the Bottom Plate to the chassis. The Logic Board is attached to the Bottom Plate with plastic clips (see Point A, Figure 5-3).

CAUTION: Do not remove the screws holding the keyboard.

Carefully lift the Bottom Plate/Logic Board and notice that there are three wiring harness attachment points: One for the keyboard at the front of the Logic Board (see Point B, Figure 5-3), and two for the power supply/monitor electronics at the left rear (if the terminal is viewed from the bottom) of the Logic Board (see Point C, Figure 5-3). Carefully remove the keyboard strap and lift the front of the board so that the other plugs can be removed. The rear plugs have a plastic spring clip type connector that must be compressed before removal. The board should be pulled forward to clear the switches and plugs from their holes in the rear of the chassis and the board can then be removed.

Assemble in the reverse order.

5.5.3 Keyboard Assembly

Remove the case as described above. Remove the (7) screws and lock washers. (see Point E, Figure 5-3' from the underneath side of the chassis on the Keyboard end. Move the keyboard away from the monitor slightly and unplug the wire strap from the logic board to the Keyboard (see Point F, Figure 5-3). Remove the Keyboard.

Assemble in the reverse order.

5.5.4 Fan Removal

The Fan is removed by first removing the case (see above) and removing the four mounting screws at the back of the terminal (see Point G, Figure 5-3). Unhook the power cord and remove.

Assemble in the reverse order.

5.5.5 Monitor Assembly Removal

The bottom plate/logic board and case should be removed first (see above). Three screws and lock washers (see Point D, Figure 5.3)) hold the Monitor Assembly to the chassis. Remove the screws from the underside of the chassis. The complete Monitor Assembly can then be removed.

Assemble in the reverse order.

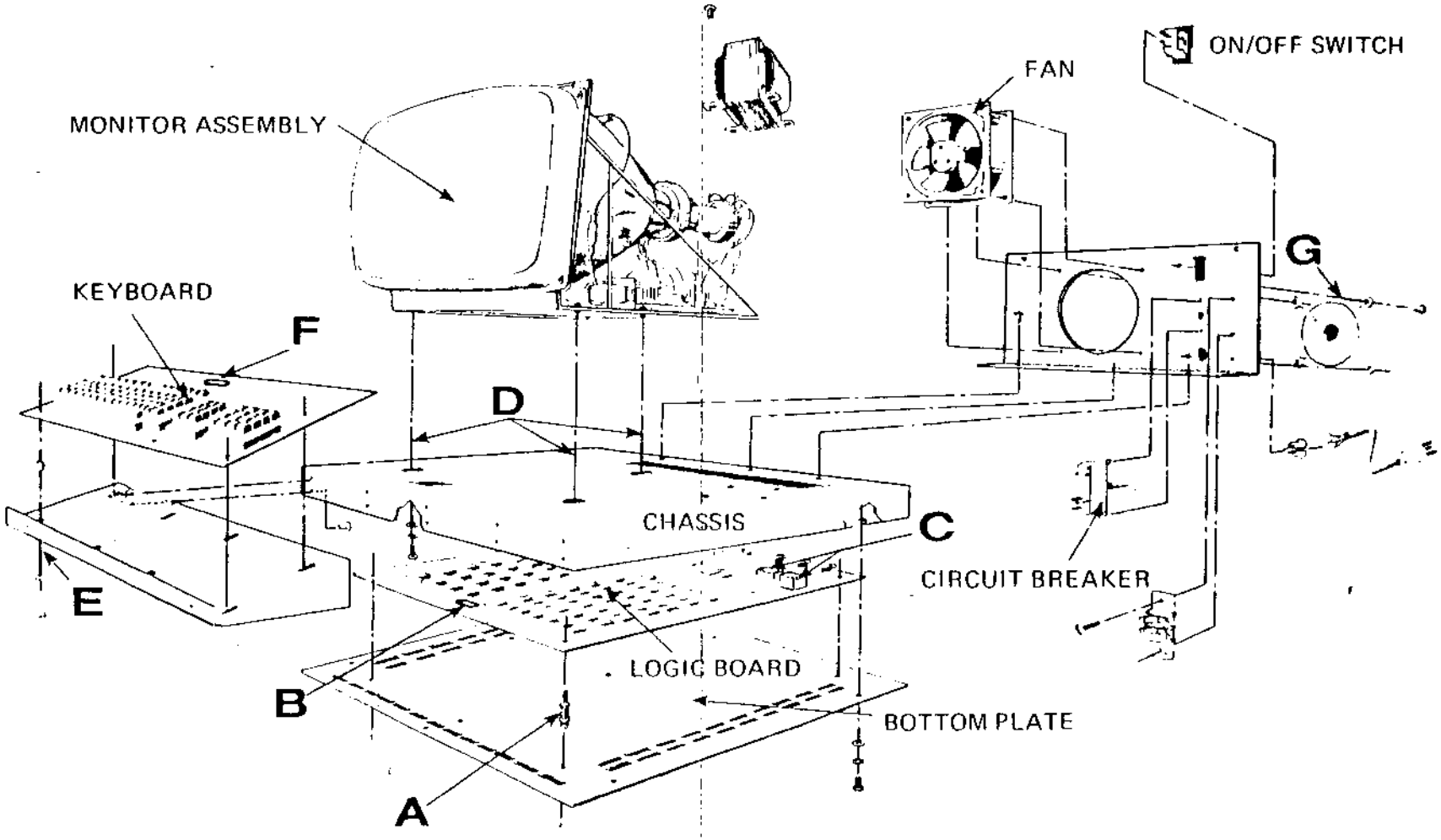

ASSEMBLY DRAWING B100 FIGURE 5-3

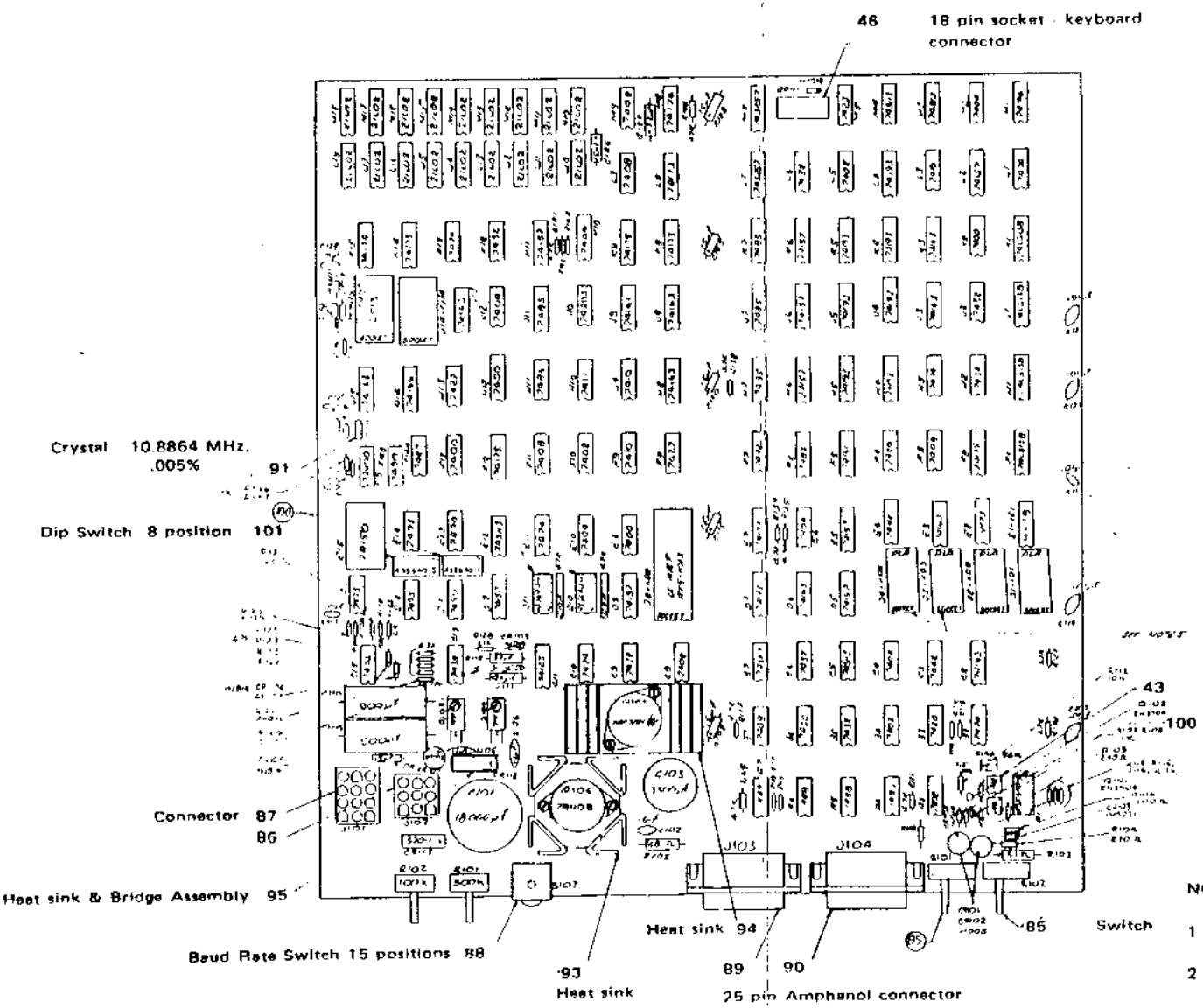

NOTES:

1 – Printed circuitry omitted for clarity.

2 – Solder per B.M.E.I. Workmanship Standard using SN60 Rosin Flux solder.

3 – Feed thru holes should be solder filled.

4 – Rubber stamp configuration dash no., serial no., and revision letter approximately as shown using .12 inch high characters in contrasting color and permanent ink.

5 – See Option List of PL 112-1301-* for proper dash no. configuration and locations.

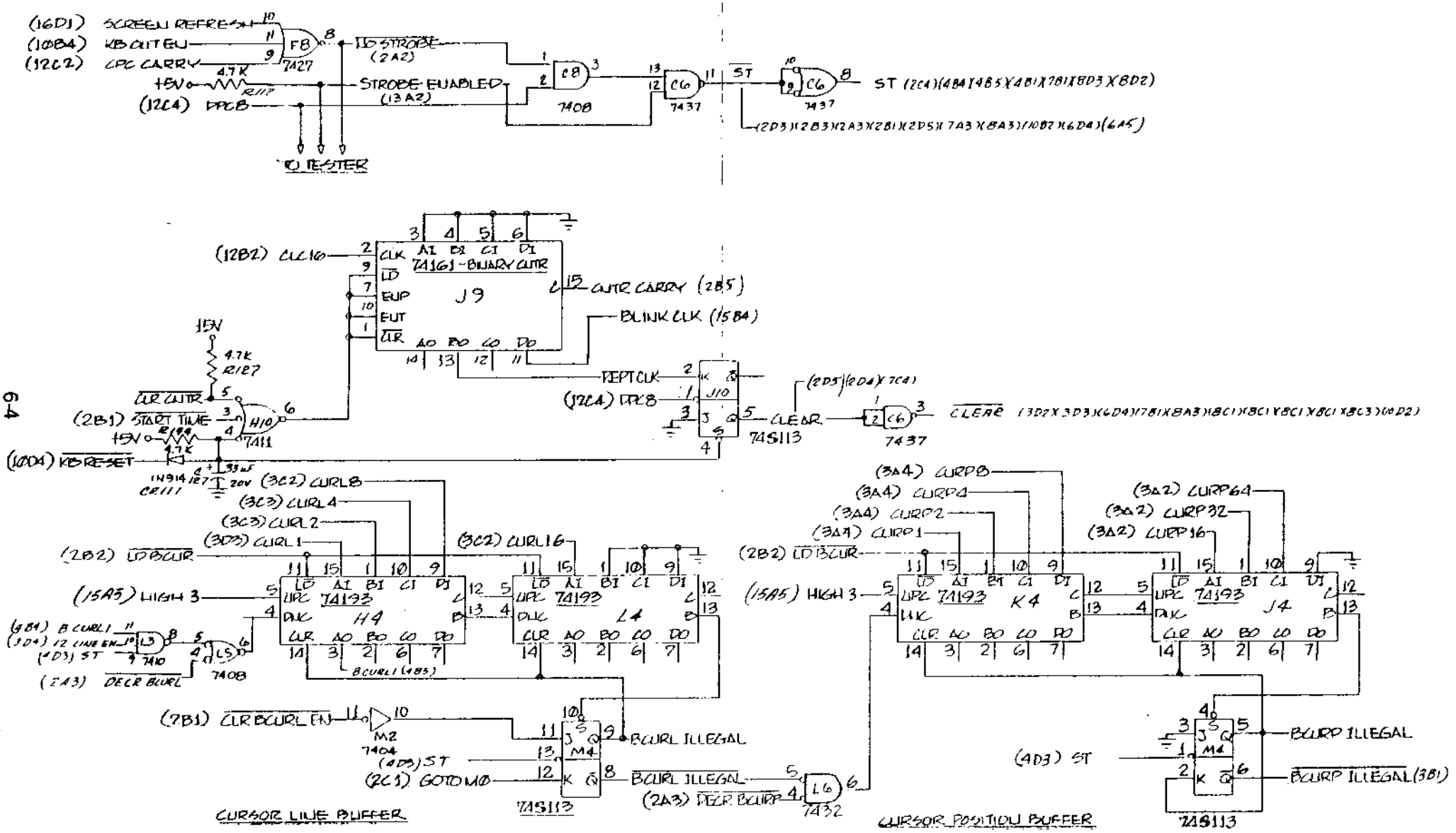
(16D1) SCREEN REFRESH
(10B4) KB OUT EN
(12C2) CPC CARRY
+5V
4.7K
R117
(12C4) DPC8
F8
7427
TO STROBE (2A2)
STROBE ENABLED (13A2)
TO TESTER
C8
7408
C6
7437
ST
ST (2C4)(4B4)(4B5)(4B1)(7B1)(8D3)(8D2)
(2D3)(2B3)(2A3)(2B1)(2D5)(7A3)(8A3)(10B2)(6D4)(6A5)
(12B2) CLC16
74161 - BINARY CNTR
J9
CNTR CARRY (2B5)
BLINK CLK (15B4)
REPT CLK
(12C4) DPC8
J10
CLEAR
74S113
(2D5)(2D4)(7C4)
CLEAR (3D2)(3D3)(6D4)(7B1)(8A3)(8C1)(8C1)(8C1)(8C1)(8C3)(10D2)
+5V
4.7K
R127
CLR CNTR
(2B1) START TIME
H10
7411
(10D4) KB RESET
1N914 R127
CR111
33uF
20V
(3C2) CURL8
(3C3) CURL4
(3C3) CURL2
(3D3) CURL1
(2B2) LD BCUR
(15A5) HIGH 3
74193
H4
L4
(3C2) CURL16
(4B4) B CURL1
(3D4) 12 LINE EN
(4D3) ST
(2A3) DECR BCURL
L3
7410
L5
7408
BCURL1 (4B5)
(2B1) CLR BCURL EN
M2
7404
(4D3) ST
(2C1) GOTO M0
M4
74S113
BCURL ILLEGAL
BCURL ILLEGAL
(2A3) DECR BCURP
L6
7432
CURSOR LINE BUFFER
(3A4) CURP8
(3A4) CURP4
(3A4) CURP2
(3A4) CURP1
(2B2) LD BCUR
(15A5) HIGH 3
74193
K4
J4
(3A2) CURP64
(3A2) CURP32
(3A2) CURP16
BCURP ILLEGAL
(4D3) ST
BCURP ILLEGAL (3B1)
74S113
CURSOR POSITION BUFFER

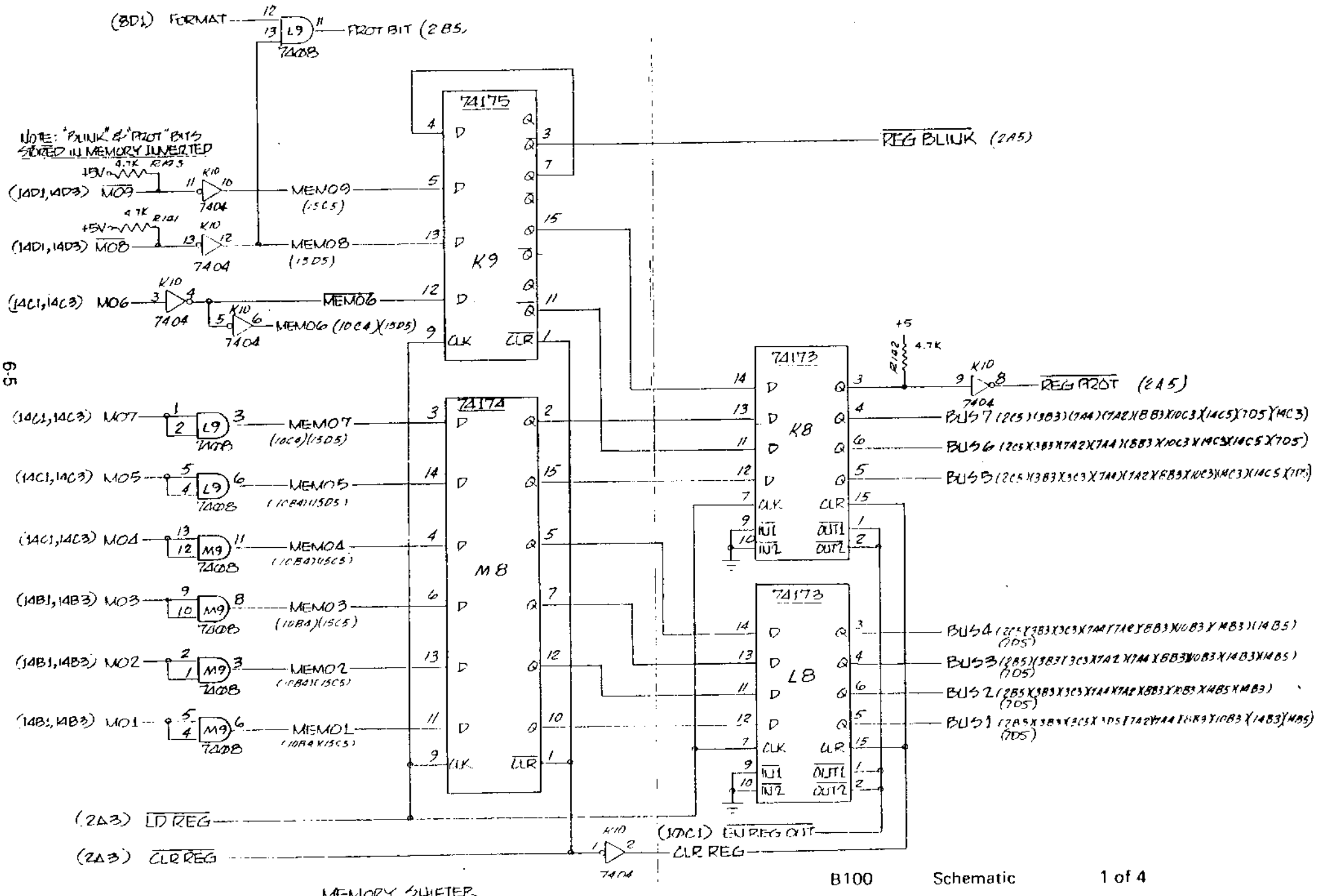
(8D1) FORMAT
FROT BIT (2B5)
74175
K9
NOTE: "BLINK" & "PROT" BITS STORED IN MEMORY INVERTED
REG BLINK (2A5)
(14D1,14D3) MO9
MEMO9
(15C5)
(14D1,14D3) MO8
MEMO8
(15D5)
(14C1,14C3) MO6
MEMO6
MEMO6 (10C4)X(15D5)
74174
M8
(14C1,14C3) MO7
MEMO7
(10C6)(15D5)
(14C1,14C3) MO5
MEMO5
(10B4)(15D5)
(14C1,14C3) MO4
MEMO4
(10B4)(15C5)
(14B1,14B3) MO3
MEMO3
(10B4)(15C5)
(14B1,14B3) MO2
MEMO2
(10B3)(15C5)
(14B1,14B3) MO1
MEMO1
(10B4)(15C5)
74173
K8
REG PROT (2A5)
BUS7 (2C5)(3B3)(7A4)(7A2)(8B3)(10C3)(14C5)(7D5)(14C3)
BUS6 (2C5)(3B3)(7A2)(7A4)(8B3)(10C3)(14C5)(14C5)(7D5)
BUS5 (2C5)(3B3)(3C3)(7A4)(7A2)(8B3)(10C3)(14C3)(14C5)(7D5)
L8
BUS4 (2C5)(3B3)(3C3)(7A4)(7A2)(8B3)(10B3)(14B3)(14B5)(7D5)
BUS3 (2B5)(3B3)(3C3)(7A2)(7A4)(8B3)(10B3)(14B3)(14B5)(7D5)
BUS2 (2B5)(3B3)(3C3)(7A4)(7A2)(8B3)(10B3)(14B5)(14B3)(7D5)
BUS1 (2B5)(3B3)(3C3)(7D5)(7A2)(7A4)(8B3)(10B3)(14B3)(14B5)(7D5)
+5
4.7K
R142
(2A3) LD REG
(2A3) CLR REG
(10C1) EU REG OUT
CLR REG
MEMORY SHIFTER
B100 Schematic 1 of 4

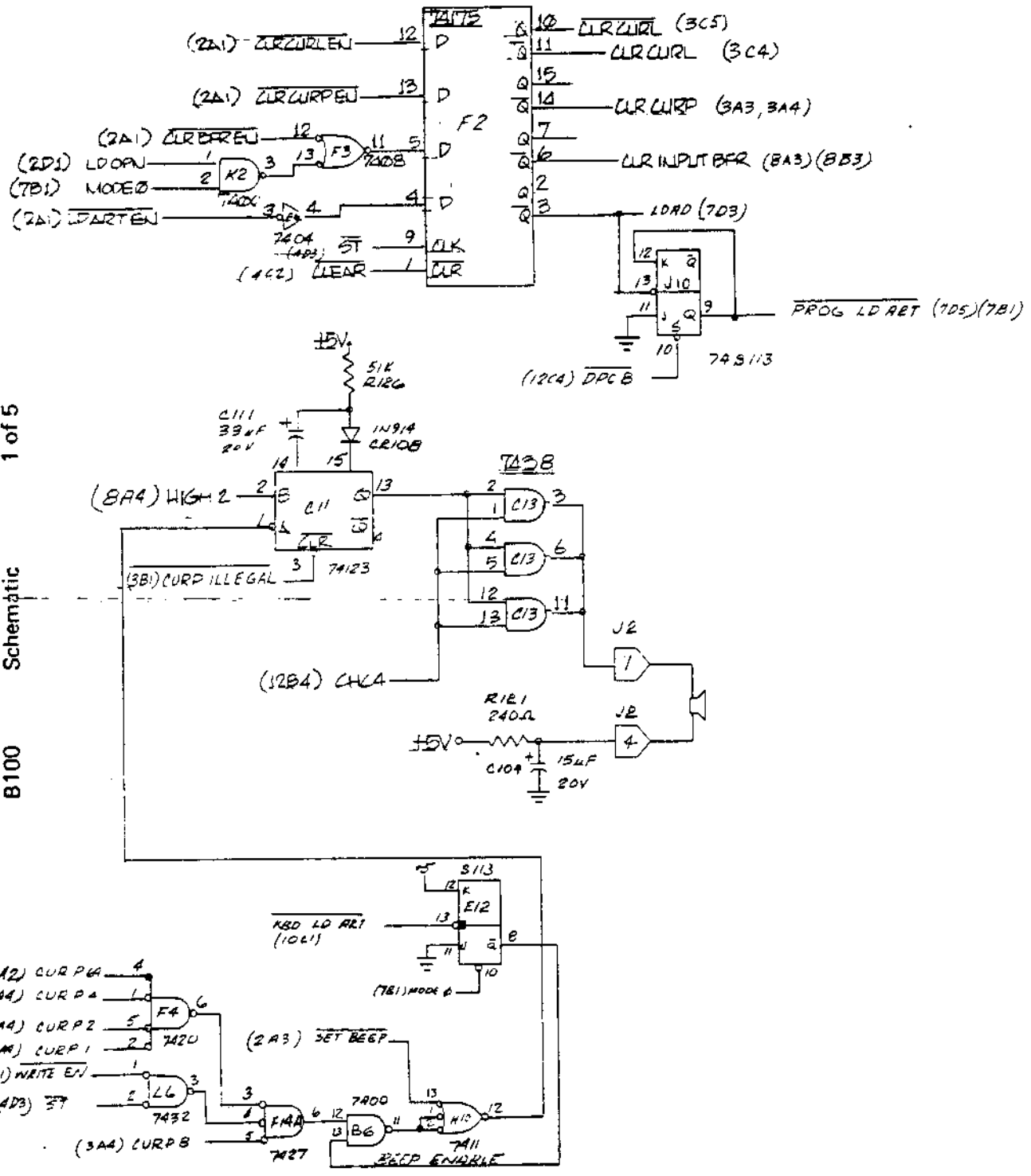
F2
CLR CURL (3C5)
CLR CURL (3C4)
CLR CURP (3A3, 3A4)
CLR INPUT BFR (8A3)(8B3)
LOAD (703)
PROG LD ART (705)(781)
74S113
(12C4) DPC B
+5V
51K R126
C111 33uF 20V
IN914 CR108
7428
(8A4) HIGH 2
C11
74123
(3B1) CURP ILLEGAL
(12B4) CHC4
R181 240Ω
C109 15uF 20V
E12
KBD LD ART (10C1)
(781) MODE 0
(3A2) CUR P 4
(3A4) CUR P 1
(3A4) CUR P 2
(3A4) CUR P 1
(2A1) WRITE EN
(4D3) ET
7420
7432
7427
7400
7411
(2A3) SET BEEP
BEEP ENABLE
(3A4) CUR P B

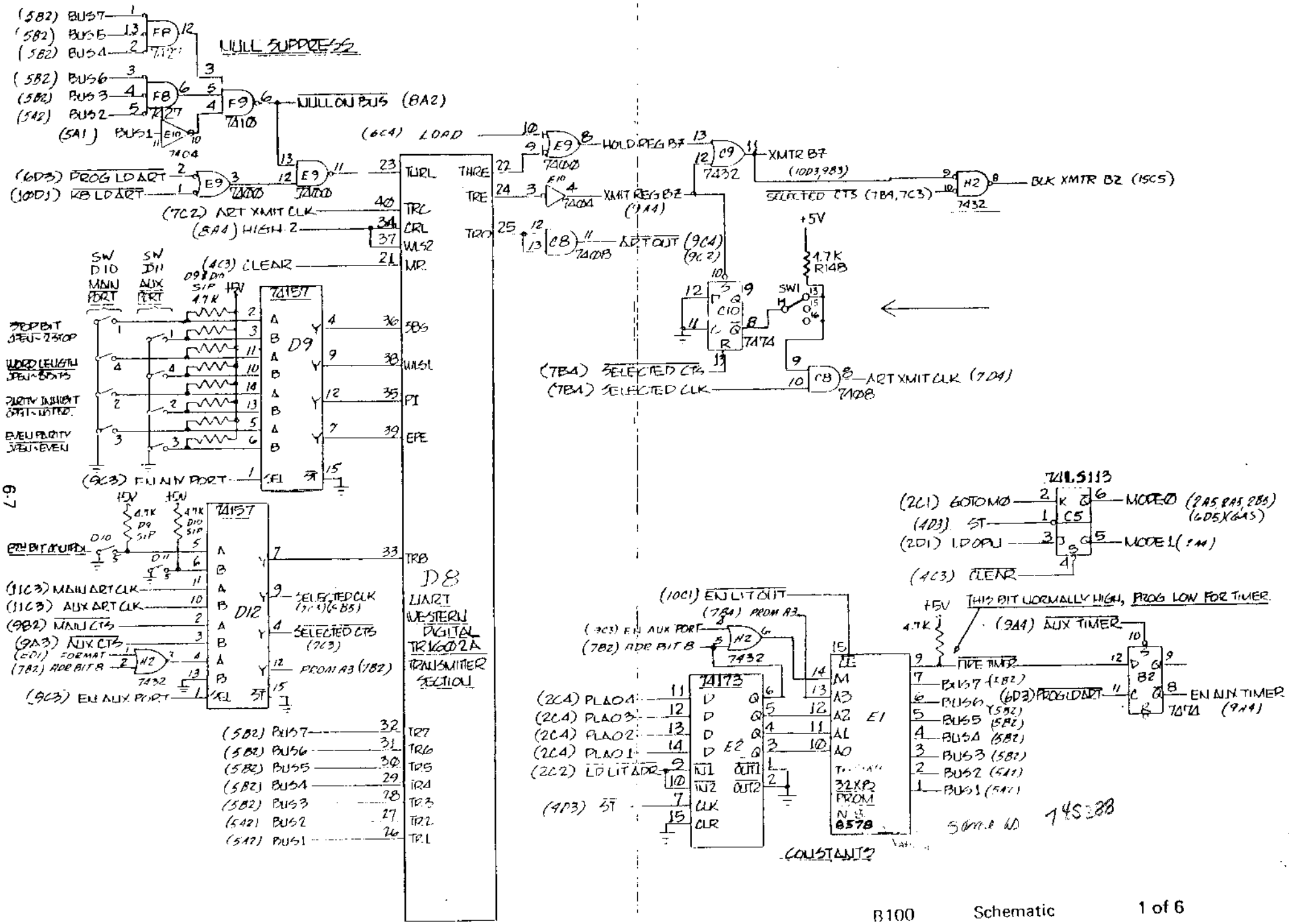
NULL SUPPRESS
NULL ON BUS (8A2)
(6C4) LOAD
HOLD REG B7
XMTR B7
BLK XMTR B2 (15C5)
SELECTED CTS (7B4, 7C3)
XMIT REG B2 (9A4)
ART OUT (9C4) (9C2)
(6D3) PROG LD ART
(10D1) KB LD ART
(7C2) ART XMIT CLK
(8A4) HIGH 2
(4C3) CLEAR
SW D10 MAIN PORT
SW D11 AUX PORT
STOP BIT OPEN-2 STOP
WORD LENGTH OPEN-8 BITS
PARITY INHIBIT OPEN-NO PAR.
EVEN PARITY OPEN-EVEN
(9C3) EN AUX PORT
74157
D9
D12
D8
UART WESTERN DIGITAL TR1602A TRANSMITTER SECTION
(11C3) MAIN ART CLK
(11C3) AUX ART CLK
(9B2) MAIN CTS
(9A3) AUX CTS
(6D1) FORMAT
(7B2) ADR BIT 8
(9C3) EN AUX PORT
SELECTED CLK (7C3)(6B5)
SELECTED CTS (7C3)
PROM A3 (7B2)
(5B2) BUS7
(5B2) BUS6
(5B2) BUS5
(5B2) BUS4
(5B2) BUS3
(5A2) BUS2
(5A2) BUS1
74LS113
(2C1) GOTO M0
(4D3) ST
(2D1) LD OPU
(4C3) CLEAR
MODE 0 (2A5, 2A5, 2B5) (6D5)(6A5)
MODE 1 (2A4)
(10C1) EN LIT OUT
(7B4) PROM A3
(9C3) EN AUX PORT
(7B2) ADR BIT 8
74173
(2C4) PLA04
(2C4) PLA03
(2C4) PLA02
(2C4) PLA01
(2C2) LD LIT ADR
(4D3) ST
E1
E2
32X8 PROM
8578
CONSTANTS
THIS BIT NORMALLY HIGH, PROG LOW FOR TIMER.
(9A4) AUX TIMER
TIME TIMER
(6D3) PROG LD ART
EN AUX TIMER (9A4)
74S288

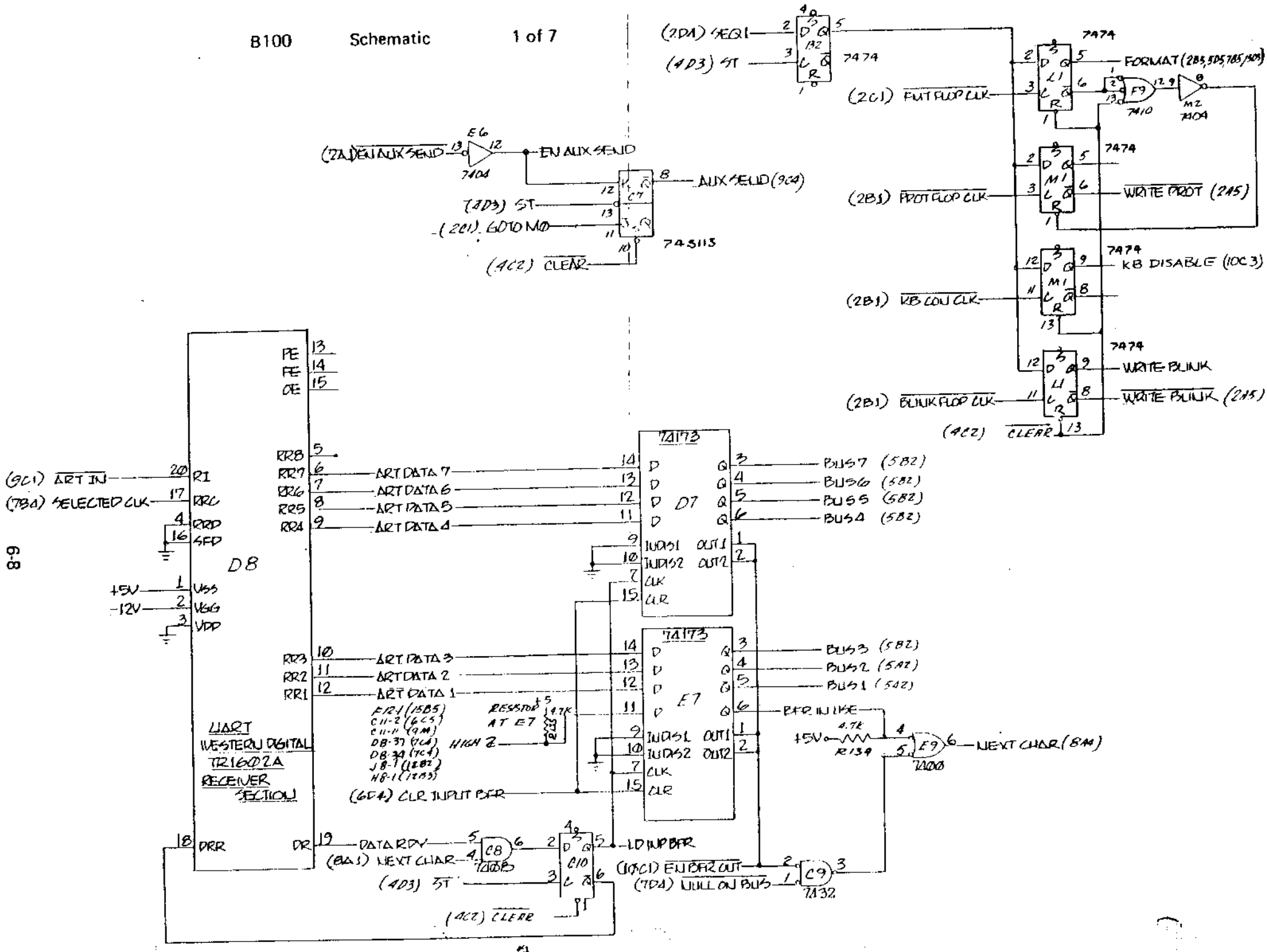
(2DA) SEQ1
(4D3) ST
7474
FORMAT (285,505,785/909)
(2C1) FMT FLOP CLK
F9
7410
M2
7404
(2B3) PROT FLOP CLK
WRITE PROT (245)
(2B2) KB DISABLE FLOP CLK
KB DISABLE (10C3)
(2B1) BLINK FLOP CLK
WRITE BLINK
WRITE BLINK (245)
(4C2) CLEAR
(7A) EN AUX SEND
E6
7404
EN AUX SEND
AUX SEND (9C4)
C7
74S113
(4D3) ST
(2C1) GOTO MO
(4C2) CLEAR
D8
UART
WESTERN DIGITAL
TR1602A
RECEIVER
SECTION
(9C1) ART IN
(7B4) SELECTED CLK
+5V
-12V
PE
FE
OE
RR8
RR7
RR6
RR5
RR4
RR3
RR2
RR1
ART DATA 7
ART DATA 6
ART DATA 5
ART DATA 4
ART DATA 3
ART DATA 2
ART DATA 1
DR
DRR
DATA RDY
(8A5) NEXT CHAR
C8
7408
(4D3) ST
(4C2) CLEAR
C10
LD INP BFR
(10C1) EN BFR OUT
(7D4) DBIN ON BUS
C9
7432
(6C4) CLR INPUT BFR
74173
D7
E7
BUS7 (5B2)
BUS6 (5B2)
BUS5 (5B2)
BUS4 (5B2)
BUS3 (5B2)
BUS2 (5A2)
BUS1 (5A2)
BFR IN USE
NEXT CHAR (8A4)
+5V
4.7K
R139
E9
7400
RESISTOR AT E7
4.7K
R133
HIGH Z
F12 (15B5)
C11-2 (6C5)
C11-11 (9A4)
D8-37 (9C4)
D8-38 (7C4)
J8-1 (12B2)
H8-1 (12B3)

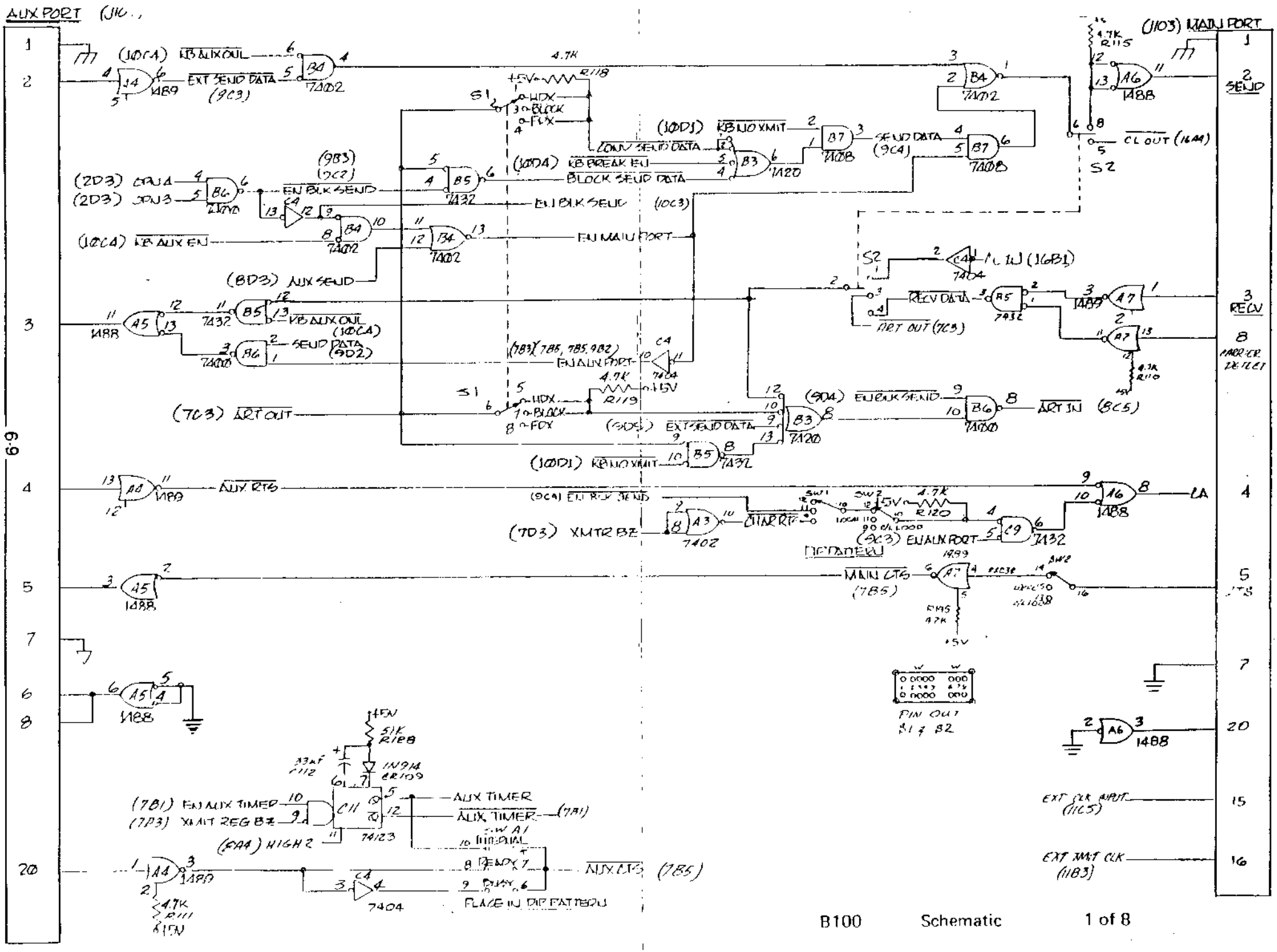

B100 Schematic 1 of 8

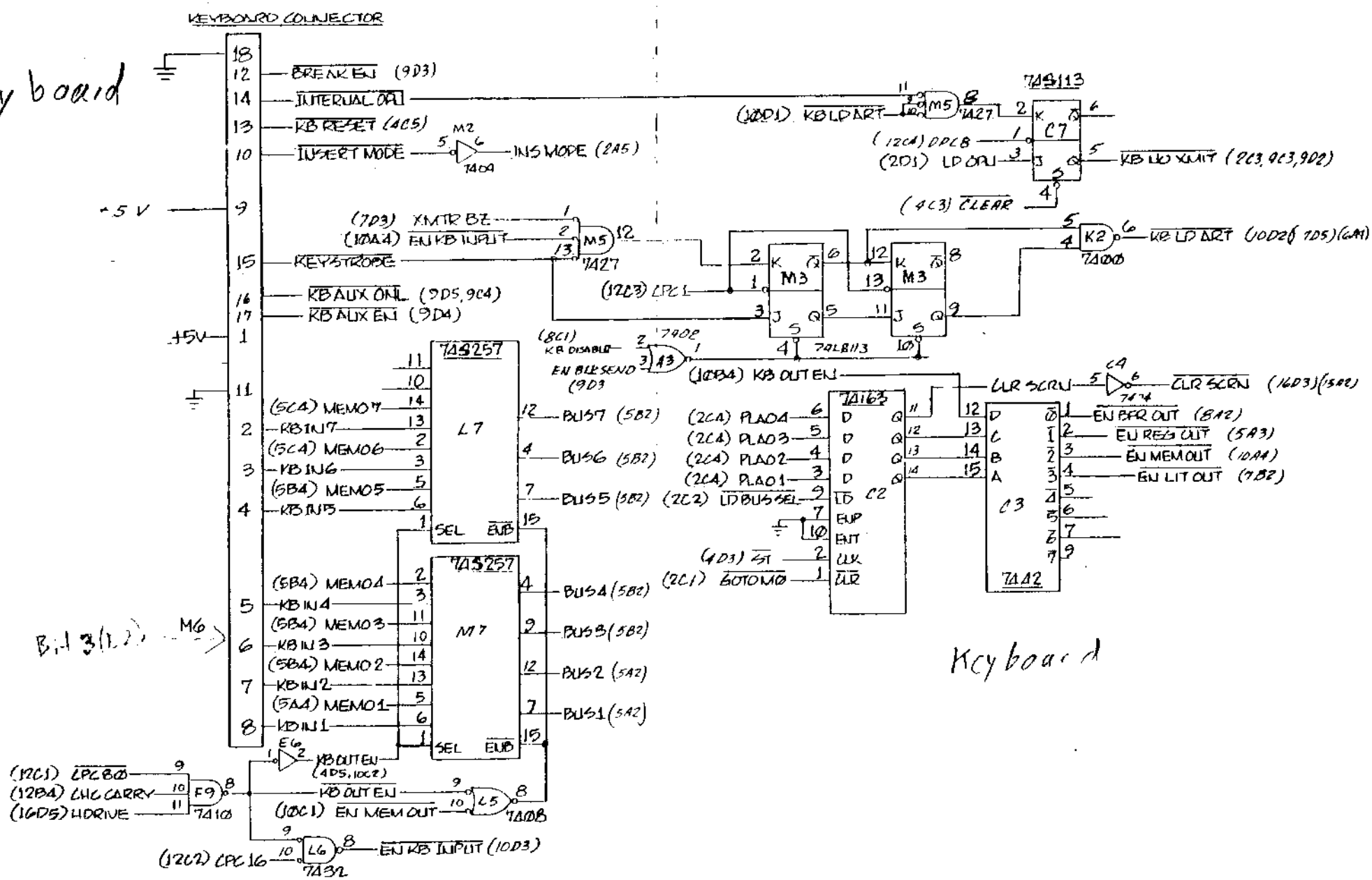
KEYBOARD CONNECTOR
Keyboard
BREAK EN (9D3)
INTERNAL OPU
KB RESET (4C5)
INSERT MODE
INS MODE (2A5)
+5 V
(7D3) XMTR BZ
(10A4) EN KB INPUT
KEYSTROBE
KB AUX ONL (9D5, 9C4)
KB AUX EN (9D4)
+5V
(5C4) MEMO7
KB IN7
(5C4) MEMO6
KB IN6
(5B4) MEMO5
KB IN5
(5B4) MEMO4
KB IN4
(5B4) MEMO3
KB IN3
(5B4) MEMO2
KB IN2
(5A4) MEMO1
KB IN1
M6
(12C1) CPC80
(12B4) CHC CARRY
(16D5) HDRIVE
KB OUT EN (4D5, 10C2)
KB OUT EN
(10C1) EN MEM OUT
(12C2) CPC16
EN KB INPUT (10D3)
7A257
L7
M7
SEL
ENB
BUS7 (5B2)
BUS6 (5B2)
BUS5 (5B2)
BUS4 (5B2)
BUS3 (5B2)
BUS2 (5A2)
BUS1 (5A2)
7A113
C7
(10D1) KB LD ART
(12C4) DPC8
(2D1) LD OPU
KB NO XMIT (2C3, 9C3, 9D2)
(4C3) CLEAR
M3
(12C3) CPC1
K2
KB LD ART (10D2) (7D5) (6A1)
(8C1) KB DISABLE
EN BLK SEND (9D3)
(10B4) KB OUT EN
CLR SCRN
CLR SCRN (16D3) (5A2)
7A163
C2
(2C4) PLA04
(2C4) PLA03
(2C4) PLA02
(2C4) PLA01
(2C2) LD BUS SEL
(4D3) ST
(2C1) GOTO M0
C3
7A42
EN BFR OUT (8A2)
EN REG OUT (5A3)
EN MEM OUT (10A4)
EN LIT OUT (7B2)
Keyboard

Section 4

TROUBLESHOOTING AND MAINTENANCE

4.1 TROUBLESHOOTING GUIDE

SYMPTOM	POSSIBLE REMEDY
1. Screen is dark	Check "A" bus Q106, Q105, CR2
2. Loss of video	CR105, Q101
3. Power consumption is to high	Check horizontal drive waveform; Check proper placement of horizontal linearity sleeve; Q105, Q106

The voltage waveforms are shown in Fig. 1, and Fig. 2 is the interconnecting cabling diagram. Figure 3 shows the circuit board component locations.

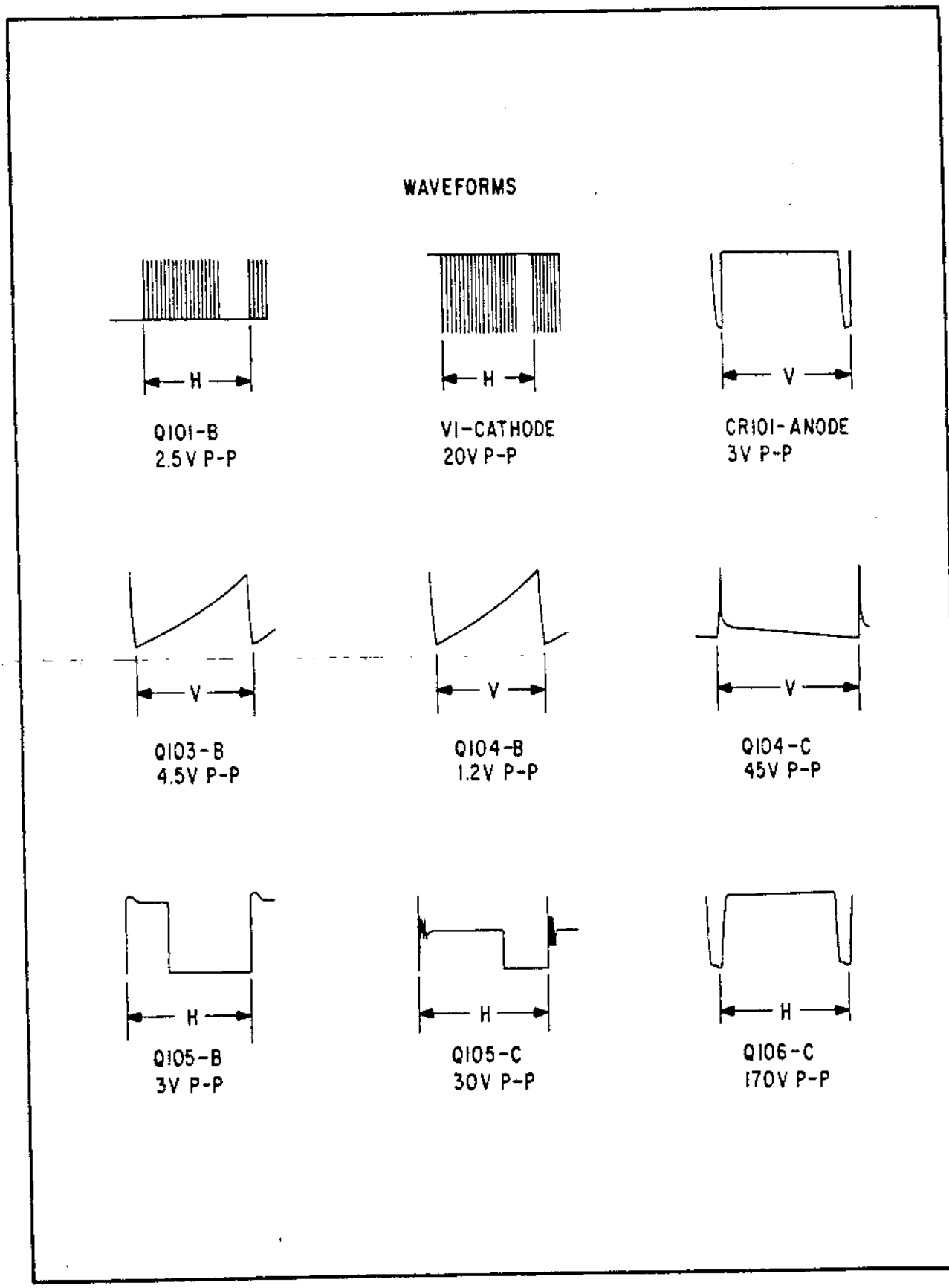

Fig. 1 Voltage Waveform

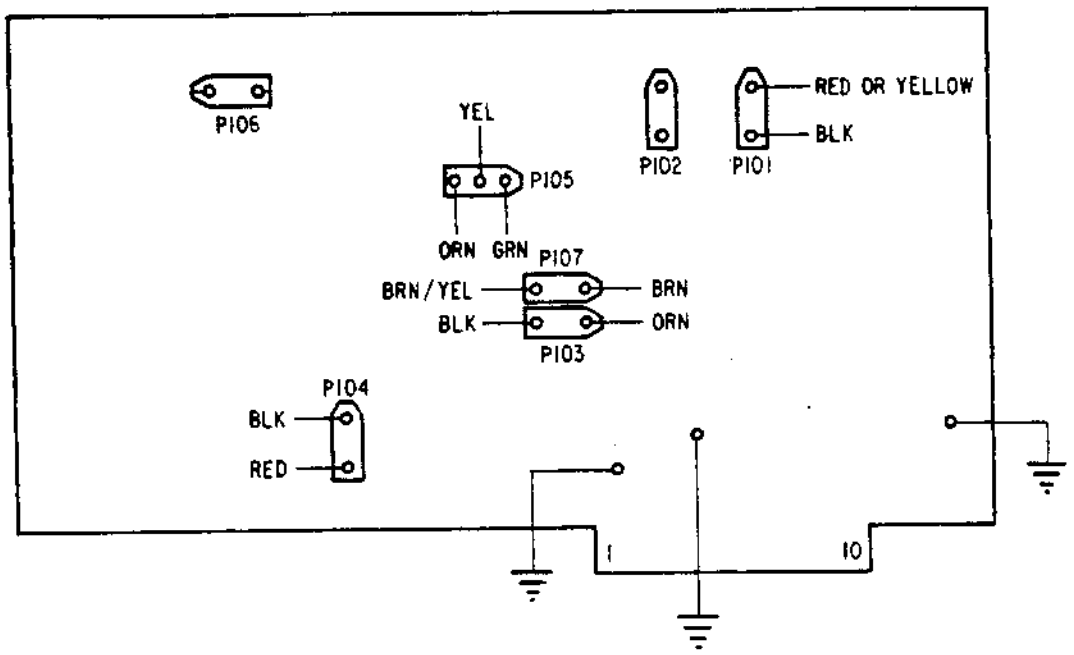

Fig. 2 Interconnecting Cabling Diagram

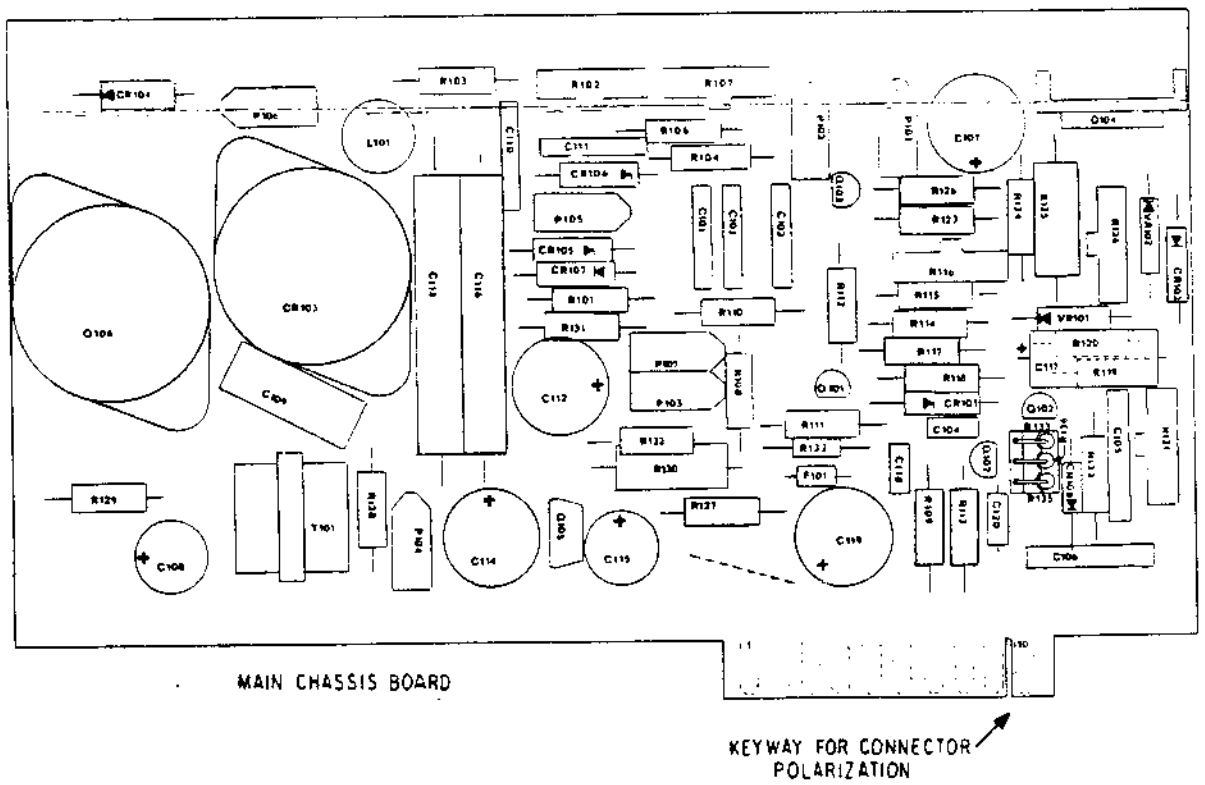

F101 AND R108 ARE USED ONLY WHEN LOW VOLTAGE POWER SUPPLY IS NOT SUPPLIED

Fig. 3 Circuit Board Components Location

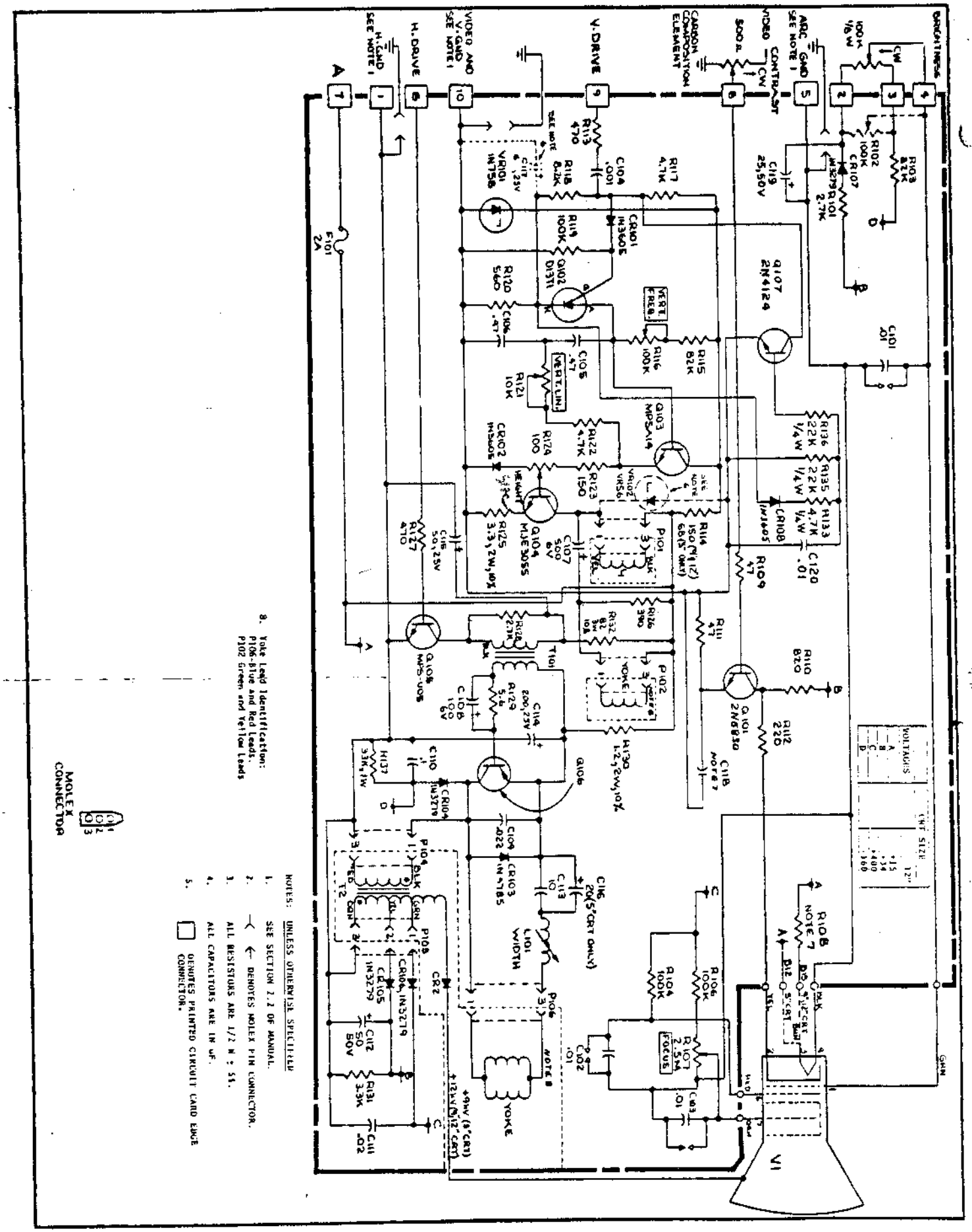

A-12

Fig. 4 TV5, 9 and 12 Without Power Supply