"THE MATERIAL HEREIN IS FOR INFORMATION PURPOSES ONLY AND IS SUBJECT TO CHANGE WITHOUT NOTICE. DIGITAL EQUIPMENT CORPORATION ASSUMES NO RESPONSIBILITY FOR ANY ERRORS WHICH MAY APPEAR HEREIN."

FIELD MAINTENANCE PRINT SET

"THIS DRAWING AND SPECIFICATIONS, HEREIN, ARE THE PROPERTY OF DIGITAL EQUIPMENT CORPORATION AND SHALL NOT BE REPRODUCED OR COPIED OR USED IN WHOLE OR IN PART AS THE BASIS FOR THE MANUFACTURE OR SALE OF ITEMS WITHOUT WRITTEN PERMISSION. COPYRIGHT © 1978 DIGITAL EQUIPMENT CORPORATION."

TABLE OF CONTENTS

B-TC-RL02-AK-1	TABLE OF CONTENTS
E-UA-RL02-AK-0	DISK DRIVE MOUNTING KIT AND CARTRIDGE
MP00553 (COMPLETE)	FIELD MAINTENANCE PRINT SET
E-AD-7013688-0-0	INTERLOCK KIT (MARK III)

UNIT VARIATIONS COVERED BY THIS PRINT SET

RL02-AK

Field Maintenance Print Set

Digital Equipment Corporation

PRINT SET ORDER NO.

MP 00698

REV.	CHG. NO.	DATE
A	RL02-CZ001 B.MILLER	9 JUNE 79
B	RL02-CX007 K.GUENZEL	28 NOV 79

REVISIONS

USED ON OPTION/MODEL
RL02-AK

SHEET 1 OF 1

DRN.		DATE	21-SEP-78
CHK'D		DATE	9 MAY 79
PROJ. ENG.		DATE	9 MAY 79
FIELD SERV.		DATE	15 MAY 79

digital

TITLE: DISK DRIVE MOUNTING KIT AND CARTRIDGE

SIZE	CODE	NUMBER	REV.
B	TC	RL02-AK-1	B

DIST.

DRB 124

REV. B

NUMBER RL02-AK-1

CODE TC

SIZE B

HOLE LOCATIONS FOR MOUNTING IN H950 AND H967 CABINETS		
AVAILABLE SPACE BENEATH RL02	MOUNTING (FROM DATUM HOLE)	
"	LOWER	UPPER
5.25	12	15
10.50	21	24
15.75	30	33
21.00	39	42
26.25	48	51
31.50	57	60

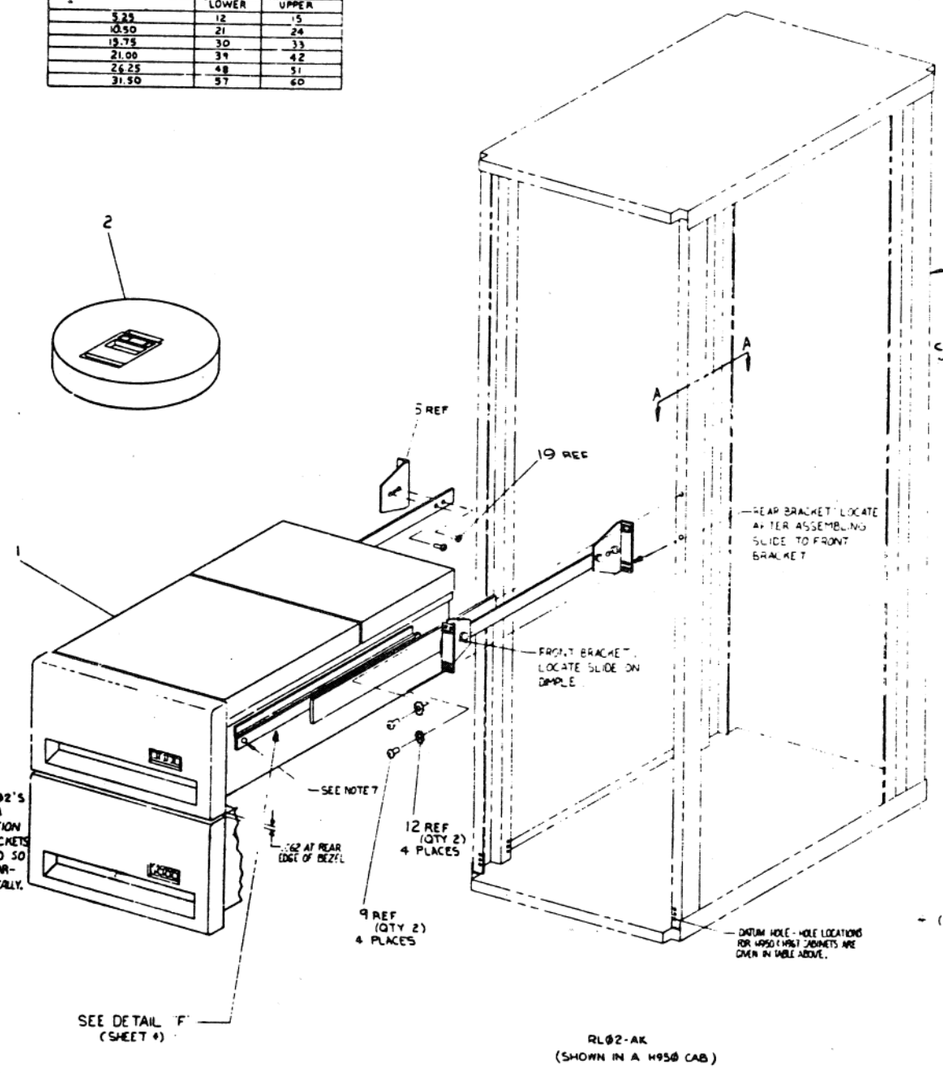

RL02-AK
(SHOWN IN A H950 CAB)

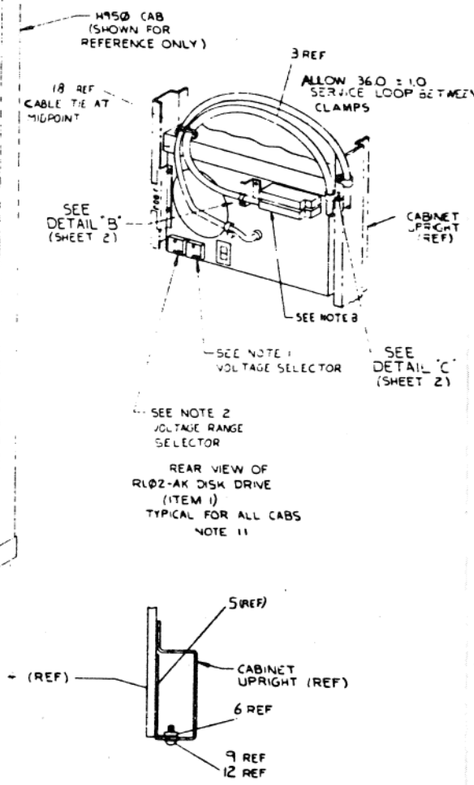

SECTION A-A
(SHOWING TYPICAL MOUNTING OF CHASSIS SLIDES TO CABINET UPRIGHTS)
SCALE: NONE

7 CONT

D SECURE DRIVE TO SLIDES USING SCREWS SUPPLIED. (SEE DETAIL "F", SHEET 4)
TO REMOVE DRIVE EXTEND SLIDES FULLY, REMOVE SCREWS, RELEASE LATCHES AND LIFT OFF

8 FOR LAST DRIVE IN A SYSTEM, I/O CABLE PLUGS INTO EITHER SOCKET. TERMINATOR (SUPPLIED WITH CONTROLLER) PLUGS INTO THE OTHER

NOTES CONT ON SH 2

NOTES:

1. MACHINE ARE SHIPPED READY FOR 115V, 60 NOMINAL VOLTAGE RANGE. FOR 220V OPERATION REMOVE TWO SCREWS FROM "VOLTAGE SELECTOR" COVER, WITHDRAW THE PLATE AND RE INSERT IT UPSIDE DOWN. AFTER RE-INSERTION 220 MUST BE SHOWING THRU THE SMALL WINDOW. REPLACE THE TWO SCREWS. CUT OFF 115V PLUG ON THE POWER CORD REPLACE BY 220V PLUG (STANDARD). FOR COLOR TEK SEE DETAIL "C", SHEET 4.

2. LOW LINE AND "NOMINAL LINE ARE DEFINED ON COVER OF "VOLTAGE RANGE SELECTOR" FOR LOW LINE VOLTAGE OPERATION REMOVE TWO SCREWS FROM VOLTAGE RANGE SELECTOR" COVER, WITHDRAW THE COVER AND RE-INSERT IT TURNED UPSIDE DOWN AFTER INSERTION, "LOW" MUST BE SHOWING THRU THE SMALL WINDOW. REPLACE THE TWO SCREWS.

3. WHEN AN RL02-AK IS ORDERED IN CONJUNCTION WITH H9500, H9501 H9502, H9503 H9600, H9601 H9602 H9603 INTER-LOCK KIT(S) (REF 21) OR CABLE RESTRAINT SYSTEM(S) (REF 22), MUST BE ORDERED AND INSTALLED.

4. WHEN AN RL02-AK IS ORDERED IN CONJUNCTION WITH A H9503/H9603 THE TRIM PIECES (H9514-B) MUST BE ORDERED.

5. WHEN AN RL02-AK IS ORDERED IN CONJUNCTION WITH A H9501/H9601 TRIM PIECES (H9514-A) MUST BE ORDERED.

6. TO ATTACH SHIPPING BRACKET (ITEM 7) REMOVE TWO SCREWS AND TWO LOCKWASHERS FROM ONE SIDE OF THE POWER PANEL ON THE REAR OF DISK DRIVE (ITEM 1). POSITION A SHIPPING BRACKET TO DETERMINE LOCATION OF "U" NUT (ITEM 13) AND ATTACH BRACKET USING ORIGINAL SCREWS AND LOCKWASHERS AND ITEMS 12 AND 9 (AS SHOWN IN DETAIL D.) BRACKET MAY BE ATTACHED TO EITHER SIDE OF UNIT

7. TO MOUNT RL02 IN CABINET
   A. MOUNT BRACKETS AND SLIDES TO "UPRIGHT".
   B. EXTEND SLIDES AS FAR AS POSSIBLE BY RELEASING CATCHES (SEE DETAIL F SHT 4)
   C. PLACE DRIVE ON SLIDES AND PUSH BACK UNTIL ENDS OF RAILS FIT UNDER TAB. ON SLIDES AND LATCHES ENGAGE.

CAUTION: OFF SHEET PARTS LIST EXISTS.
SEE K-PL-RL02-AK-DBP (20848).

REV	DESCRIPTION	DWG/PART NO.	ITEM NO
A	PLACE CODE B. MILLER	RL02-CODE1 B. MILLER	
B	PLACE CODE B. MILLER	RL02-CODE2 B. MILLER	
C	PLACE CODE B. MILLER	RL02-CODE3 B. MILLER	

UNLESS OTHERWISE SPECIFIED DIMENSIONS ARE IN INCHES

ANGLES ±½°	CLASS OF ACCURACY	DECIMAL PLACES	.0	.00	.000	.0000	.00000
SURFACE QUALITY 125	CODE 1000	MINIMUM	±.005	±.005	±.002	±.000	±.00
MACHINING		PRESSED	±.010	±.010	±.005	±.000	±.0

QUANTITY: 0 VARIATION

DRN: [illegible] 1-1-78
CHK'D: [illegible]
ENG: [illegible]
PROJ. ENG.: [illegible]
PRODUCTION: [illegible]
NEXT HIGHER ASSY: 0 00-RL02-AK
SCALE: NONE
SHEET 1 OF 4

FIRST USED ON: RL02
TITLE: DISK DRIVE MTG. KIT & CARTRIDGE
SIZE: B
CODE: UA
NUMBER: RL02 AK-0
REV: C

3

NOTES: (CONT)

7. CABINET OPTIONS INCLUDE SKINS, DOORS, COVERS, TRIM, & FAN CONTROLLER.

TYPE	VOLTAGE	DWG	REMARKS
H950	110	H960-BC	INCLUDES FIVE 10.5 RK PANELS
	220	H960-BD	
H967	0	H967-BA	10.5 RK COVER PANELS (H950-QA) MUST BE ORDERED IF REQUIRED.
	220	H967-BB	
H9500	110	H9603-ED	SWLB WITH H9561-B TOP COVERS.
	220	H9603-EE	
	110	H9601-ED	SWLB WITH H9561-A TOP COVERS.
	220	H9601-EE	
	110	H9602-EA	SWHB - STANDARD - BOX CABINET.
	220	H9602-EB	
	110	H9600-EA	DWHB COMPLETE HIBOY CABINET
	220	H9600-EB	
		H9602-B-0	SWHB OPTION ARRANGEMENT [illegible] ORDER AS REQ'D
		H9600-A-0	DWHB OPTION ARRANGEMENT [illegible] ORDER AS REQ'D
		H9603-B-0	SWLB OPTION ARRANGEMENT [illegible] ORDER AS REQ'D
H9500		H9601-A-0	DWLB OPTION ARRANGEMENT [illegible] ORDER AS REQ'D

8. WHERE A LONGER CABLE IS REQUIRED THAN ITEM #3 USE ONE OF THE FOLLOWING:

LENGTH	PART NO.
20 FEET	7012122-20
40 FEET	7012122-40
60 FEET	7012122-60

TOTAL LENGTH OF CABLE(S) NOT TO EXCEED 100 FEET

9. OPTIONAL CABLE ROUTING INSIDE CHANNEL UPRIGHTS. DO NOT ALLOW CABLES TO BE CAUGHT BETWEEN CABINET UPRIGHTS AND REAR OF DISK DRIVE

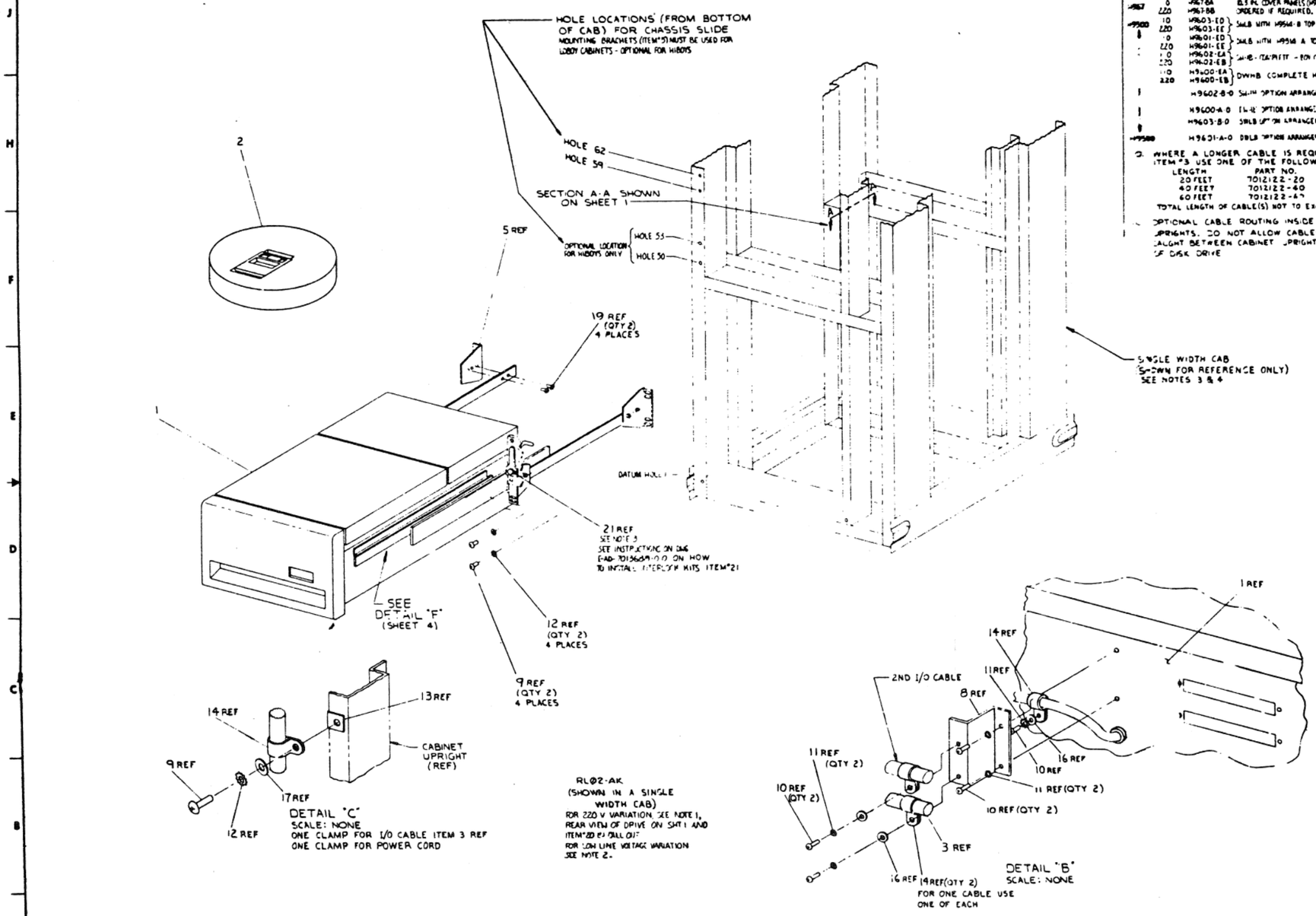

TITLE DISK DRIVE MTG ASY & CARTRIDGE			
SCALE NONE	SHEET 2 OF 4	B UA RL02-AK-0	REV C

4

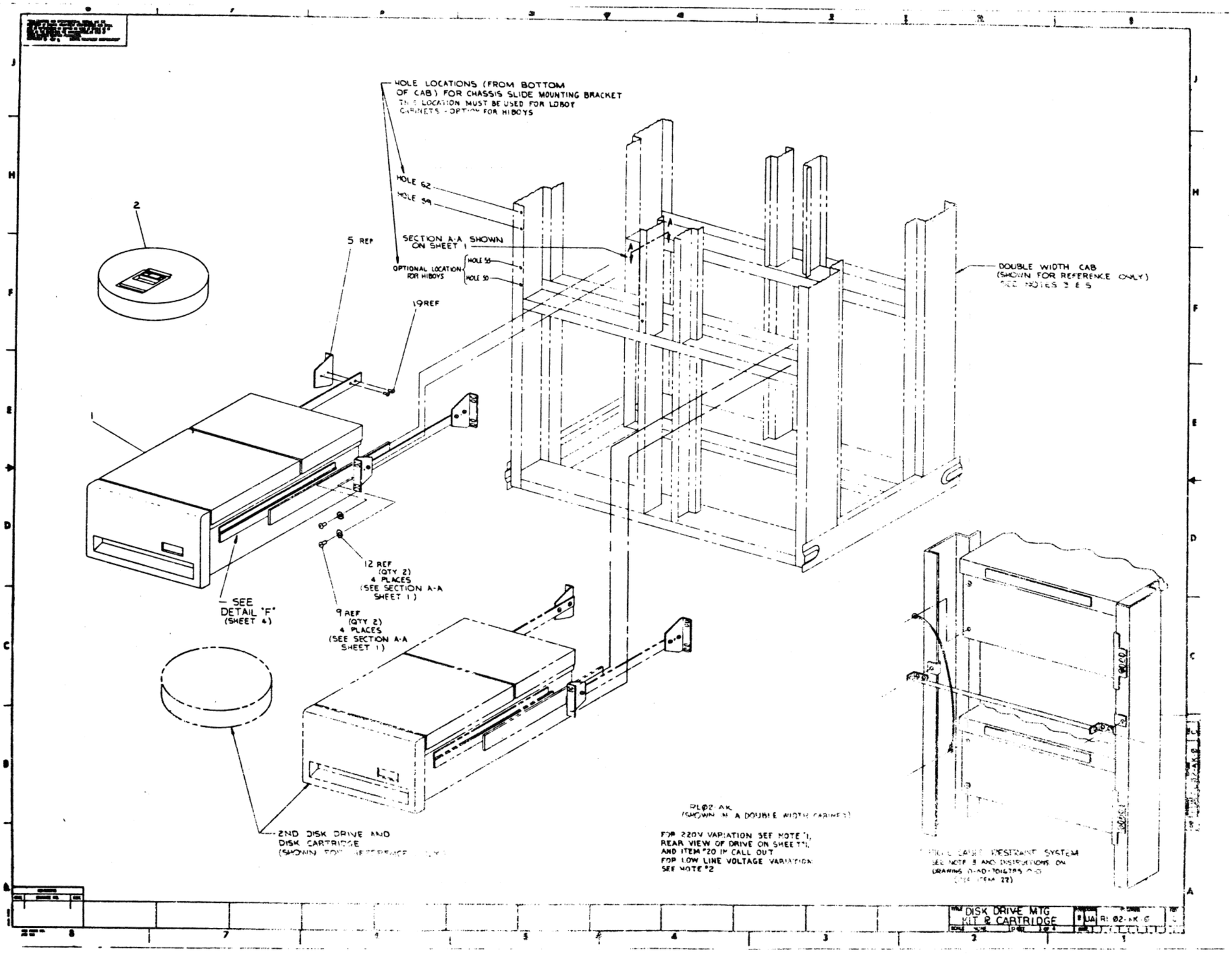
HOLE LOCATIONS (FROM BOTTOM OF CAB) FOR CHASSIS SLIDE MOUNTING BRACKET
THIS LOCATION MUST BE USED FOR LOBOY CABINETS - OPTION FOR HIBOYS
HOLE 62
HOLE 59
SECTION A-A SHOWN ON SHEET 1
OPTIONAL LOCATION FOR HIBOYS
HOLE 55
HOLE 50
DOUBLE WIDTH CAB (SHOWN FOR REFERENCE ONLY) SEE NOTES 3 & 5
2
5 REF
19 REF
1
12 REF (QTY 2) 4 PLACES (SEE SECTION A-A SHEET 1)
9 REF (QTY 2) 4 PLACES (SEE SECTION A-A SHEET 1)
SEE DETAIL "F" (SHEET 4)
2ND DISK DRIVE AND DISK CARTRIDGE
FOR 220V VARIATION SEE NOTE 1, REAR VIEW OF DRIVE ON SHEET 7, AND ITEM #20 IN CALL OUT
FOR LOW LINE VOLTAGE VARIATION SEE NOTE #2
DISK DRIVE MTG KIT & CARTRIDGE

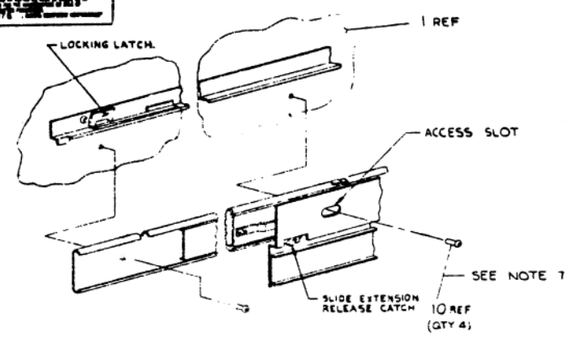

DETAIL 'F'
SEE NOTE 7

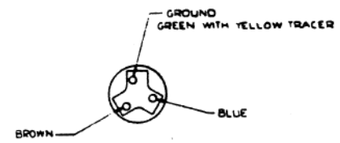

DETAIL G
REAR VIEW OF ITEM 20
WITH STRAIN RELIEF REMOVED

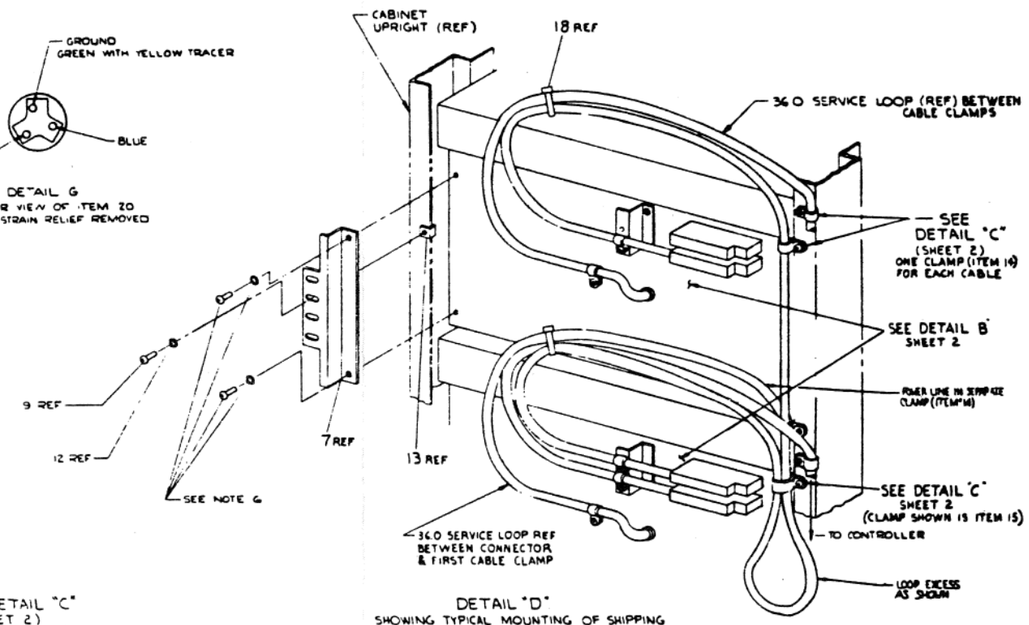

DETAIL "D"
SHOWING TYPICAL MOUNTING OF SHIPPING BRKT (ITEM 7) AND CABLE ROUTING FOR DUAL DRIVE SYSTEM (CPU BELOW) IN AN H950 CABINET
NOTE 11

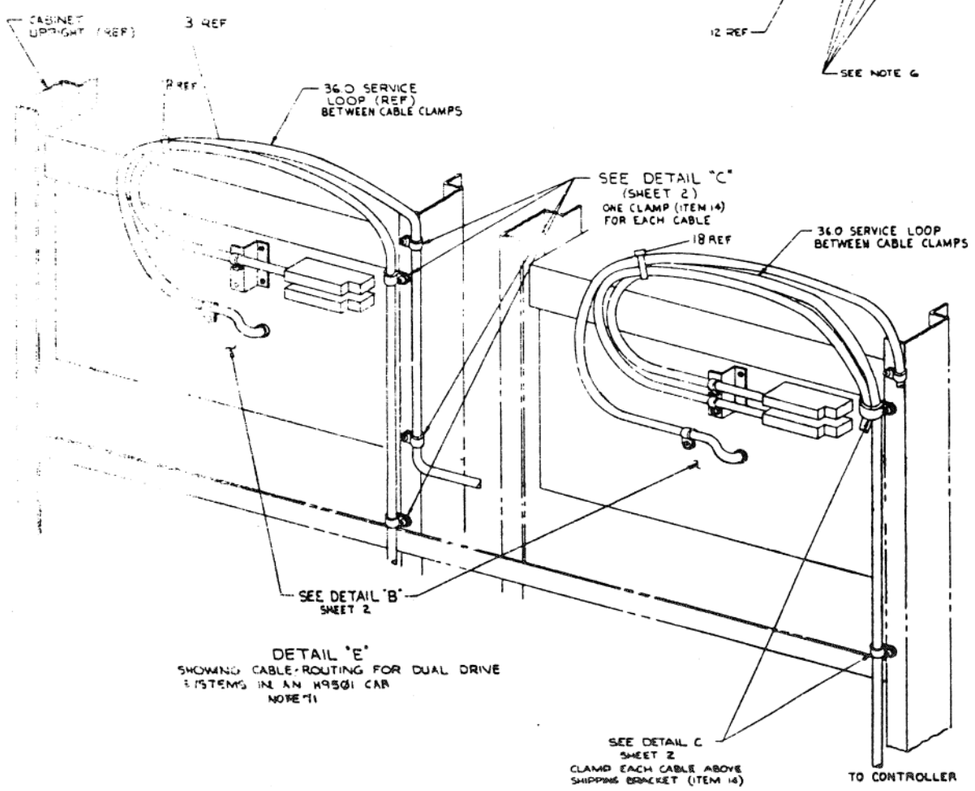

DETAIL "E"
SHOWING CABLE-ROUTING FOR DUAL DRIVE SYSTEMS IN AN H9501 CAB
NOTE 11

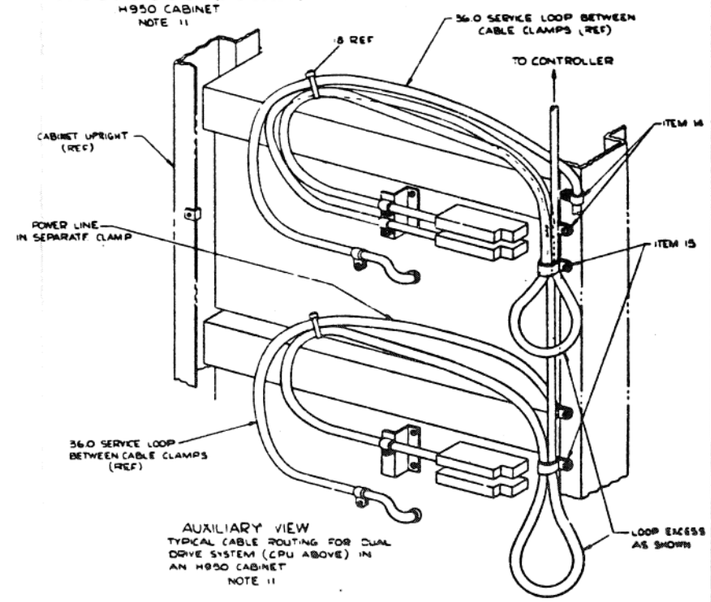

AUXILIARY VIEW
TYPICAL CABLE ROUTING FOR DUAL DRIVE SYSTEM (CPU ABOVE) IN AN H950 CABINET
NOTE 11

DISK DRIVE MTG KIT & CARTRIDGE	E	UA	RL02-AK-0	C