"THE MATERIAL HEREIN IS FOR INFORMATION PURPOSES ONLY AND IS SUBJECT TO CHANGE WITHOUT NOTICE. DIGITAL EQUIPMENT CORPORATION ASSUMES NO RESPONSIBILITY FOR ANY ERRORS WHICH MAY APPEAR HEREIN."

DRAWING DIRECTORY

"THIS DRAWING AND SPECIFICATIONS, HEREIN, ARE THE PROPERTY OF DIGITAL EQUIPMENT CORPORATION AND SHALL NOT BE REPRODUCED OR COPIED OR USED IN WHOLE OR IN PART AS THE BASIS FOR THE MANUFACTURE OR SALE OF ITEMS WITHOUT WRITTEN PERMISSION. COPYRIGHT © 1972 , DIGITAL EQUIPMENT CORPORATION."

CUSTOMER PRINT SET

DRAWING DIRECTORY	B-DD-H744-0
CIRCUIT SCHEMATIC	D-CS-H744-0-1
UNIT ASSY	E-UA-H744-0-0

MFG SET

TEST PROCEDURE	A-SP-H744-0-3
MFG SPEC	A-SP-H744-0-8
PACKAGING INST	A-PI-3700074-0-0

UNIT VARIATIONS

VAR	TITLE
H744	+5V REGULATOR
H744-YA	2.0 - 8.0V VARIABLE REGULATOR

REVISIONS		
CHK	CHANGE NO.	REV.
[illegible]	00019	R
YA	00020	S

USED ON OPTION/MODEL
11/45

SHEET 1 OF 4

DRN. D. FONTAINE	DATE 2-4-72	TITLE +5V REGULATOR
CHK'D. D. FONTAINE	DATE 2-4-72	
PROJ. ENG. G. POWER	DATE 2-24-72	SIZE B · GROUP DD · CODE H744-0 · REV S
PROD. A. HIPSCH	DATE 2-24-72	SHT.

393

SIZE B CODE DD NUMBER H744-Ø REV. S

DRAWING NO.	NO. OF SHTS	PART NO.	DESCRIPTION	REVISIONS		
D-AH-H744-Ø-5			ASSY DRILLING/HOLE LAYOUT	Y	Y	Y
E-UA-H744-Ø-Ø	1		UNIT ASSY	Y	Z	AA
D-CS-H744-Ø-1	1		CIRCUIT SCHEMATIC	Y	Y	Y
B-MH-H744-Ø-6	4		MODULE ECO HISTORY	AD	AE	AE
		5009725	ETCHED BOARD	H	H	H
A-SP-H744-Ø-3			TEST PROCEDURE	REF		REF
A-SP-H744-Ø-8			MFG SPEC	REF		REF
D-PS-1210737-Ø-Ø	1		HEAT SINK	REF		REF
D-IA-5309756-Ø-Ø	1		REGULATOR BRK'T	REF		REF
C-MD-5309760-Ø-Ø	1		COMPONENT COVER	REF		REF
C-MD-5309759-Ø-Ø	1		CAPACITOR STRAP	REF		REF
A-PI-3700074-Ø-Ø	2		PACKAGING INSTRUCTION	REF		REF
A-PS-9905211-Ø-Ø	2		OUTER CARTON	REF		REF
A-PS-9905212-Ø-Ø	2		INNER PACKAGING	REF		REF
C-IA-7412388-Ø-Ø			2.5 CAP HOLDER	REF		REF
C-MD-7419952-Ø-Ø			COMPONENT COVER	REF		

NOTES:

REVISIONS		
DATE	CHG NO.	REV.
	00018	
2-77	00019	R
3-78	00020	S

"THIS DRAWING AND SPECIFICATIONS, HEREIN, ARE THE PROPERTY OF DIGITAL EQUIPMENT CORPORATION AND SHALL NOT BE REPRODUCED OR COPIED OR USED IN WHOLE OR IN PART AS THE BASIS FOR THE MANUFACTURE OR SALE OF ITEMS WITHOUT WRITTEN PERMISSION.
COPYRIGHT © 1977, DIGITAL EQUIPMENT CORPORATION"

digital

USED ON OPTION/MODEL
11/45

DRN.	D. FONTAINE	2-4-72
CHK'D	D. FONTAINE	2-4-72
ENG.	G. POTTER	2-24-72
PROD.	A. HIRSCH	2-24-72

TITLE
+5V REGULATOR

SIZE B CODE DD NUMBER H744-0 REV.

SHEET 2 OF 4

DRAWING NO.	NO. OF SHTS	PART NO.	DESCRIPTION	REVISIONS		
D-AH-H744-Ø-5			ASSY DRILLING/HOLE LAYOUT	Y	Y	
E-UA-H744-Ø-Ø	1		UNIT ASSY	W	W1	
D-CS-H744-Ø-1	1		CIRCUIT SCHEMATIC	W	W1	
B-MH-H744-Ø-6	4		MODULE ECO HISTORY	AC	AE	
		5009725	ETCHED BOARD	H	H	
A-SP-H744-Ø-3			TEST PROCEDURE	REF		
A-SP-H744-Ø-8			MFG SPEC	REF		
D-PS-1210737-Ø-Ø	1		HEAT SINK	REF		
D-IA-5309756-Ø-Ø	1		REGULATOR BRK'T	REF		
C-MD-5309760-Ø-Ø	1		COMPONENT COVER	REF		
C-MD-5309759-Ø-Ø	1		CAPACITOR STRAP	REF		
A-PI-3700074-Ø-Ø	2		PACKAGING INSTRUCTION	REF		
A-PS-9905211-Ø-Ø	2		OUTER CARTON	REF		
A-PS-9905212-Ø-Ø	2		INNER PACKAGING	REF		
C-IA-7412388-Ø-Ø			2.5 CAP HOLDER	REF		
C-MD-7419952-Ø-Ø			COMPONENT COVER	REF		

NOTES:

REVISIONS		
DATE	CHG NO.	REV.
	00017	
2-77	00019	R

"THIS DRAWING AND SPECIFICATIONS, HEREIN, ARE THE PROPERTY OF DIGITAL EQUIPMENT CORPORATION AND SHALL NOT BE REPRODUCED OR COPIED OR USED IN WHOLE OR IN PART AS THE BASIS FOR THE MANUFACTURE OR SALE OF ITEMS WITHOUT WRITTEN PERMISSION.
COPYRIGHT © 1977, DIGITAL EQUIPMENT CORPORATION"

digital

USED ON OPTION/MODEL	
11/45	

DRN.	D. FONTAINE	2-4-72
CHK'D	D. FONTAINE	2-4-72
ENG.	G. POTTER	2-24-72
PROD.	A. HIRSCH	2-24-72

TITLE +5V REGULATOR

SIZE B CODE DD NUMBER H744-Ø REV. S

SHEET 3 OF 4

395

SIZE CODE B DD NUMBER H744-Ø REV. S

DRAWING NO.	NO. OF SHTS	PART NO.	DESCRIPTION	REVISIONS	
D-AH-H744-Ø-5			ASSY DRILLING/HOLE LAYOUT	Y	Y
E-UA-H744-Ø-Ø	1		UNIT ASSY	V	V1
D-CS-H744-Ø-1	1		CIRCUIT SCHEMATIC	W	W1
B-MH-H744-Ø-6	4		MODULE ECO HISTORY	AB	AE
		5009725	ETCHED BOARD	H	H
A-SP-H744-Ø-3			TEST PROCEDURE	REF	
A-SP-H744-Ø-8			MFG SPEC	REF	
D-PS-1210737-Ø-Ø	1		HEAT SINK	REF	
D-IA-5309756-Ø-Ø	1		REGULATOR BRK'T	REF	
C-MD-5309760-Ø-Ø	1		COMPONENT COVER	REF	
C-MD-5309759-Ø-Ø	1		CAPACITOR STRAP	REF	
A-PI-3700074-Ø-Ø	2		PACKAGING INSTRUCTION	REF	
A-PS-9905211-Ø-Ø	2		OUTER CARTON	REF	
A-PS-9905212-Ø-Ø	2		INNER PACKAGING	REF	
C-IA-7412388-Ø-Ø			2.5 CAP HOLDER	REF	
C-MD-7419952-Ø-Ø			COMPONENT COVER	REF	

NOTES:

REVISIONS		
DATE	CHG NO.	REV.
2-77	00019	R
	00016	

"THIS DRAWING AND SPECIFICATIONS, HEREIN, ARE THE PROPERTY OF DIGITAL EQUIPMENT CORPORATION AND SHALL NOT BE REPRODUCED OR COPIED OR USED IN WHOLE OR IN PART AS THE BASIS FOR THE MANUFACTURE OR SALE OF ITEMS WITHOUT WRITTEN PERMISSION.
COPYRIGHT © 1977, DIGITAL EQUIPMENT CORPORATION"

digital

USED ON OPTION/MODEL: 11/45

DRN.	D. FONTAINE	2-4-72
CHK'D	D. FONTAINE	2-4-72
ENG.	G. POTTER	2-24-72
PROD.	A. HIRSCH	2-24-72

TITLE: +5V REGULATOR

SIZE B | CODE DD | NUMBER H744-Ø | REV. S

SHEET 4 OF 4

This drawing and specifications, herein, are the property of Digital Equipment Corporation and shall not be reproduced or copied or used in whole or in part as the basis for the manufacture or sale of items without written permission. © 1973 Digital Equipment Corporation

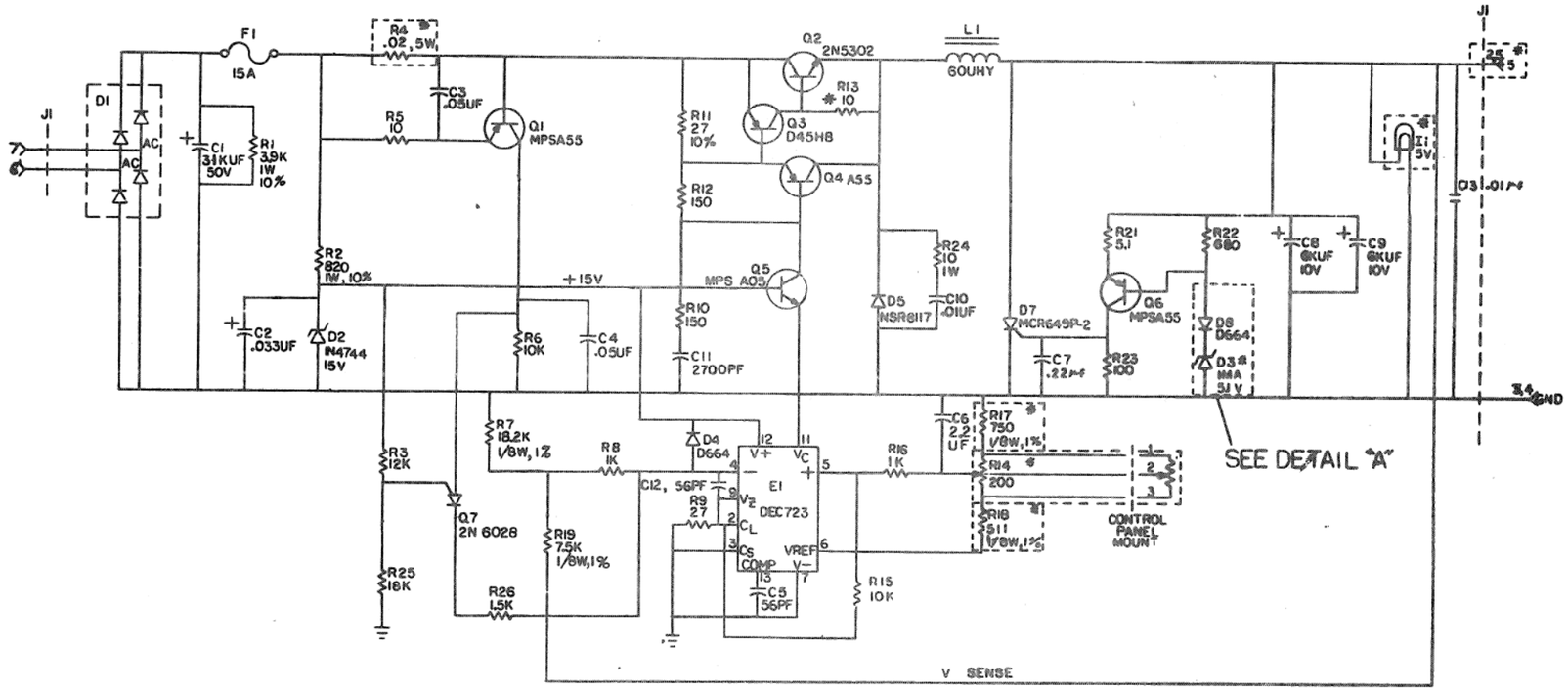

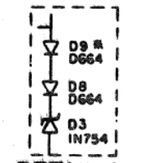

DETAIL A
FOR YA VARIATION ONLY

*FUSIBLE RESISTOR

[ ] FOR YA VARIATION COMPONENT VALUES ARE AS FOLLOWS:
R4 - .06 5W
R14 - 1K 10 TURN
R17 - 300 1/8W 1%
R19 - 150 1/4W 5%
D3 - 1N754
I1 - 15V
J1-2,5 - +2.0-8.0V

D9 - D664 ADDED FOR YA VARIATION ONLY

UNLESS OTHERWISE INDICATED:
RESISTORS ARE 1/4W, 5%

QTY	REF DESIGNATION	DESCRIPTION	PART NO.
		PARTS LIST	
	ETCH BOARD REV	F H	

DEC NO.	EIA NO.	DEC NO.	EIA NO.
IN964A	SAME	MPSA55	
D664	IN3606	2N5302	
MCR649P-2		D45H8	
IN751A	SAME	MPSA05	
IN4744	SAME		
NSR8117			
2N6028			

SEMICONDUCTOR CONVERSION CHART

REVISIONS				
D. MARTEL	H744-00018	Y		
A. BARON	H744-00016	W		
A. BARON	H744-00015	V		
A. BARON	H744-00014	U		
A. BARON	H744-00013	T		
KISARGENT	H744-00012	S		
A. BARON	H744-00011	R		
A. MARTEL	H744-00010	P		
A. MARTEL	H744-00009	N		
	H744-00008	M		
	H744-00007	L		
R. WILF	H744-00006	K		
	H744-00005	J		
G. POTTER	H744-00004	H		
G. POTTER	H744-00003	F		
G. POTTER	H744-00002	E		
	H744-00001	REV		
CHANGE NO.	CHK			

EQUIPMENT CORPORATION

TITLE 5V REGULATOR

DCS H744-0-1

SHEET 1 OF 1

397

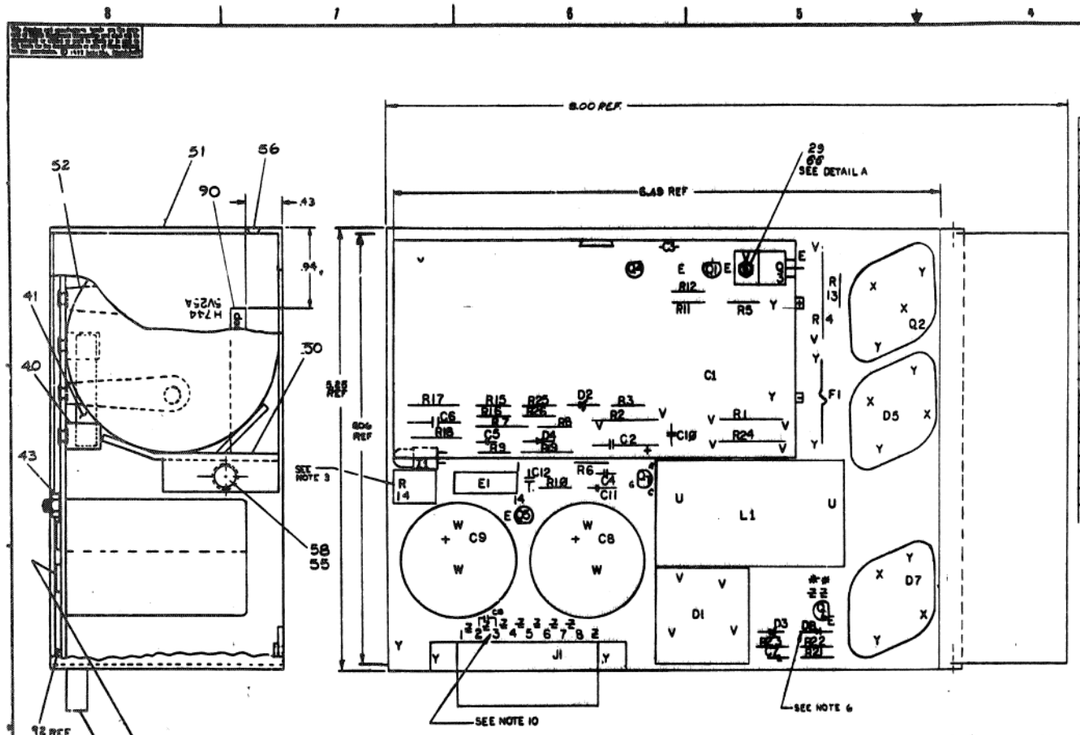

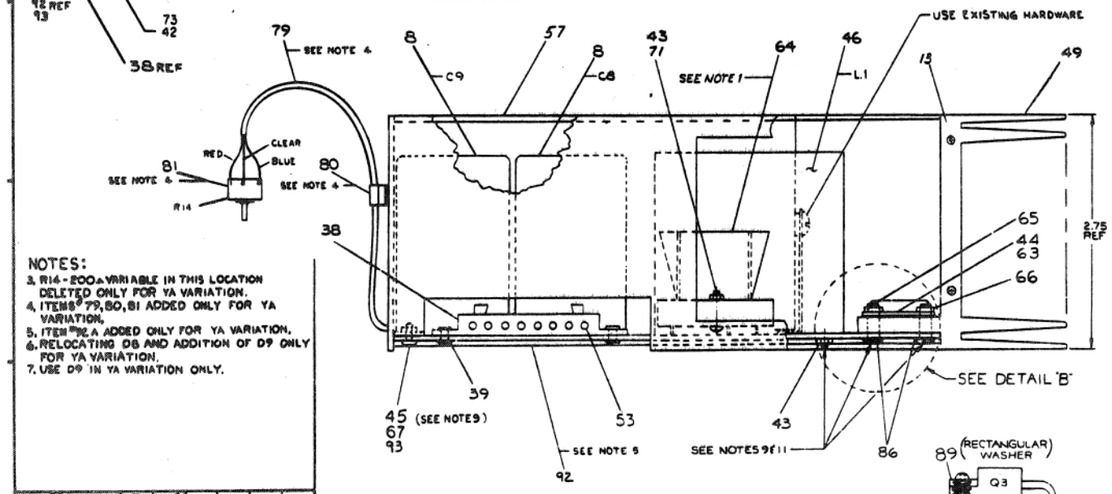

NOTES:

3. R14 - 200Ω VARIABLE IN THIS LOCATION DELETED ONLY FOR YA VARIATION.
4. ITEMS # 79, 80, 81 ADDED ONLY FOR YA VARIATION.
5. ITEM # 92 A ADDED ONLY FOR YA VARIATION.
6. RELOCATING D6 AND ADDITION OF D9 ONLY FOR YA VARIATION.
7. USE D9 IN YA VARIATION ONLY.

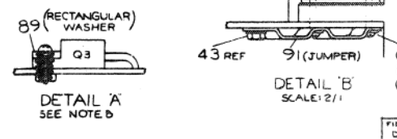

DETAIL 'A'
SEE NOTE 8

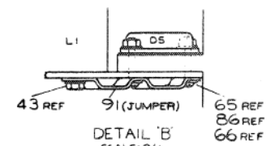

DETAIL 'B'
SCALE 2/1

NOTES:

1. APPLY ITEM # 63 (COMPOUND) BETWEEN TRANSISTOR (Q2), DIODES (D5, D7) AND ITEM # 64 (WASHER) ALSO BETWEEN ITEM # 64 (WASHER) AND HEAT SINK (ITEM # 49) ALSO APPLY ITEM # 63 (COMPOUND) BETWEEN ITEM # 9 (DIODE BRIDGE) AND ITEM # 64 (HEAT SINK BRIDGE).

NOTES CONT:

NOTE 8:
(1) 93 SCREW HEAD SHOULD BE ON TOP OF FLAT RECTANGULAR WASHER AS SHOWN. APPLY 8 INCH LBS. OF TORQUE WHEN SECURING Q3 TO CKT. BOARD BEFORE SOLDERING.

NOTE 9: TORQUE APPLICATION
(1) APPLY 12 INCH LBS OF TORQUE TO THE SCREWHEAD OF #4 HARDWARE EXCEPT Q3.
(2) APPLY 12 INCH LBS OF TORQUE TO #6 HARDWARE ON L1.
(3) APPLY 16 INCH LBS OF TORQUE TO ALL #6 AND #10 HARDWARE EXCEPT ON L1.
(4) ALL HARDWARE TO BE TORQUED BEFORE SOLDERING

NOTE 10
INSERT C13 INTO ETCH PAD HOLES CONNECTED TO J1 TERMINALS, 2-3.

NOTE 11:
MIN TORQUE REQUIRED FOR QC INSPECTION:
8 INCH LBS FOR #4 HARDWARE,
12 INCH LBS FOR #6 AND #10 HARDWARE
SEE NOTE 7

744-YA	744-YB					
1	1	REE	RES 680 1/4W 5%	1301424	99	0
1	1		PACKING INSTRUCTIONS	API 3700074-0	70	2
1	1		SCR, PHL PAN HD #6-32 x 5/8 LG	9006025-1	71	7
1	0	I1	15 VOLT LAMP	1209109	72	6
4	4		LOCKWASHER #10 INT	9006688	73	1
[illegible]	[illegible]		[illegible]	[illegible]	74	AR
[illegible]	[illegible]		[illegible]	[illegible]	75	1
[illegible]	[illegible]		[illegible]	[illegible]	76	1
[illegible]	[illegible]		[illegible]	[illegible]	77	1
[illegible]	[illegible]		[illegible]	[illegible]	78	1
1	0	2 IN	WIRE, MICRODOT	1700014	79	1
1	0		CLAMP, CABLE	9007079	80	1
1	0	R14	POT, 10 TURN, 1KΩ	1309532-04	81	1
1	0	R17	RES, 300Ω 1/4W 5%	1301425	82	1
1	0	R18	RES, 180Ω 1/4W 5%	1300250	83	1
1	0	R4	RES, 86Ω 5W 3%	1310876-02	84	0
1	0	D3	DIODE ZENER 1N754	1109991	85	2
6	6	-	WASHER, INT TOOTH # 4	9006632	86	1
1	1	C7	CAP .22μf 50V	1010274	87	1
1	1	R13	RES 10 1/4W 5% FUSIBLE	1312496	88	1
1	1	-	WASHER, RECTANGULAR	9009769	89	2
1	1	-	DECAL (H744)	ADC7415945-1-0	90	1
1	1	-	JUMPER	1214074	91	1
1	0	-	COVER, BOTTOM	7419952	92	2
2	0	-	WASHER, FIBER	9008848	93	3
						3
						4
						1
						2
						6
						1
						1
						1