MASTER DRAWING LIST

MAINTENANCE MANUALS NO.	TITLE	UNIT VARIATIONS KL8-E	KL8-EA	KL8-EB	KL8-EC	KL8-ED	KL8-EE	KL8-EF	KL8-EG
KL8-E	ASYNC DATA CONTROL	X	X	X	X	X	X	X	X

USED ON OPTIONS							
PDP8/E							
PDP8/M							

REVISIONS REV.	DATE	CHG. NO.	APP'D.
A	4/71	M865-3	JM
B	8/71	KL8E-3	
C	12/71	KL8E-4	
D	1/72	8E-55	
E	1/72	KL8E-3	EJC

DRN. K. GULICK	DATE 12-3-7	digital EQUIPMENT CORPORATION MAYNARD, MASSACHUSETTS
CHK'D. K. GULICK	DATE 12-3-7	
ENG. MCNAMARA	DATE 1-13-71	TITLE ASYNC DATA CONTROL
PROJ. ENG. VOGELSANG	DATE 1-13-71	
PROD. L. SAYLOR	DATE 1-13-71	
FIRST USED ON PDP8/E		SIZE A / CODE ML / NUMBER KL8-E / REV E
SCALE		
SHEET 1 OF 2		DIST.

PRINT SET KL8E	DWG. NO.	REV. LET.	NO. OF SHEETS	TITLE	OPTION NO.
X	E-CS-M865Ø-Ø-1	#	2	ASYNC. DATA CONTROL	
X	E-CS-M865Ø-YA-1	#	2	ASYNC. DATA CONTROL	
X	D-IA-7008360-0-0		1	CABLE ASSY	
X	D-IA-BCØ1V-25-Ø		1	CABLE ASSY	
X	A-SP-KL8-E-1		16	ENGINEERING SPECIFICATIONS	
X	A-PL-KL8-E-Ø		1	ASYNC. DATA CONTROL	
	A-SP-KL8-E-2		10	TEST PROCEDURE	
	A-SP-KL8-E-3		5	ACCEPTANCE	
-	LIBKIT-8E-KL8-E-02	REF	1	KIT LIST	
X	A-AL-KL8-E-4		1	ACCESSORY LIST	

TITLE				
ASYNC. DATA CONTROL	SHEET 2 OF 2	SIZE A / CODE ML	NUMBER KL8-E	REV E

DRA 132

DEC 16 (325) 1048 1 N471

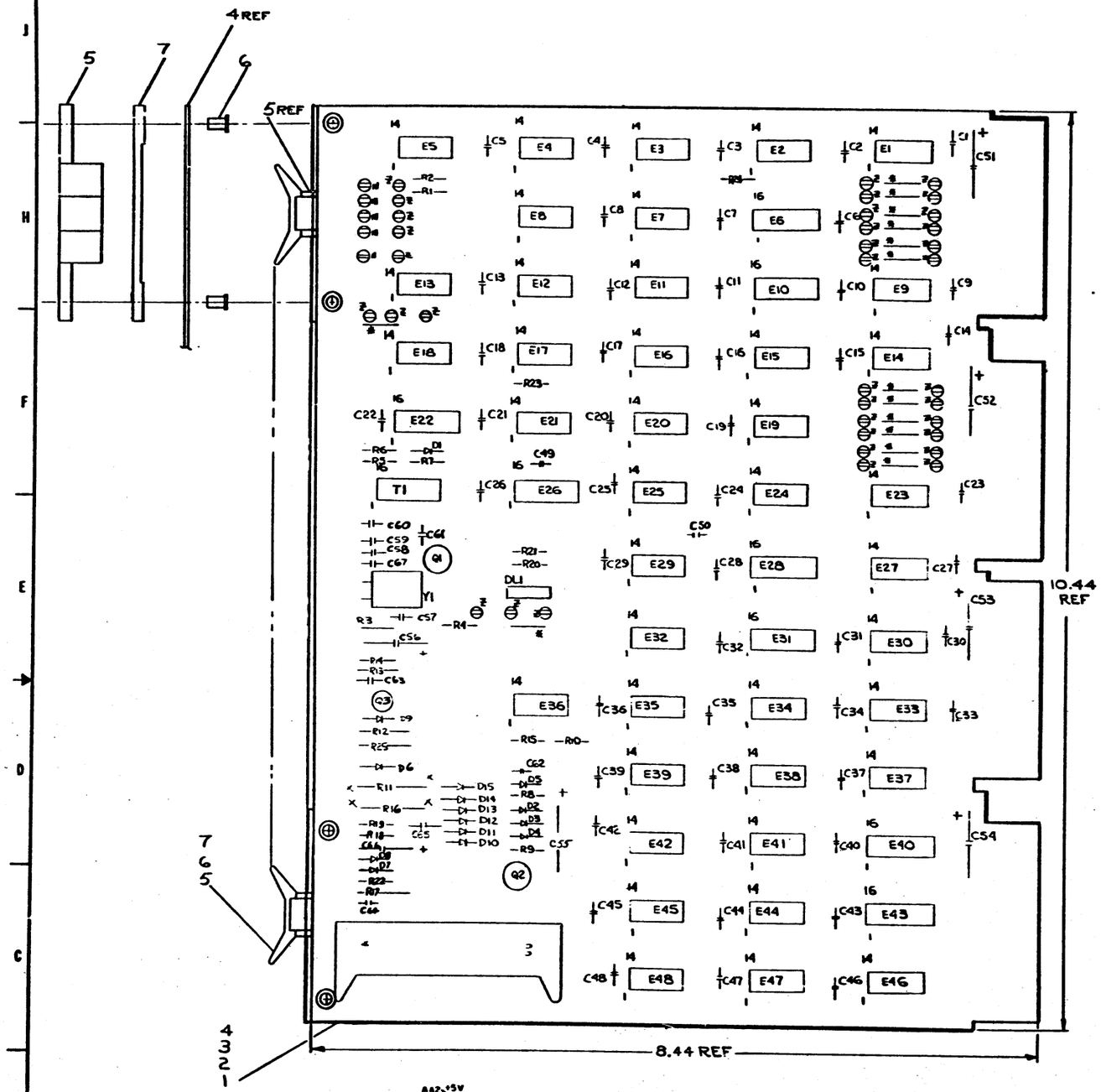

NOTES:

1. $\frac{4}{B}-\frac{A}{C}-\frac{2}{B}$: SPLIT LUGS
   $\frac{A}{C}\frac{J024}{D}\frac{B}{}$: MACHINE INSERTED JUMPER
   B>- : 40 PIN HEADER CONNECTION
   DATA II $\frac{DV1}{}$: OMNIBUS CONNECTION
2. PIN F IS EIA TRANSMITTED DATA:
   +6V OR MORE = SPACE = 0
   -6V OR LESS = MARK = 1
   PIN V IS EIA REQUEST TO SEND, +6V OR MORE = ON (PERMANENTLY).
   PIN DD IS EIA DATA TERMINAL READY, +6V OR MORE = ON (PERMANENTLY).
3. THIS DRAWING FOLLOWS DEC STANDARD 056 LOGIC SYMBOLOGY.
   FLIP-FLOPS ARE NAMED FOR THE CONDITION THEY REPRESENT IN THE "1" STATE.
   THE FOLLOWING FIGURES APPLY:

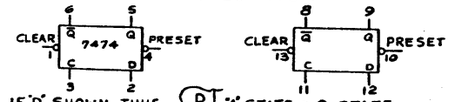

   IF 'D' SHOWN THUS D, '1' STATE = Q STATE.
   IF 'D' SHOWN THUS D, '1' STATE = $\bar{Q}$ STATE.
   IF '1' SHOWN THUS THIS LEAD IS HIGH WHEN FLIP-FLOP IS IN '1' STATE.
   IF '1' SHOWN THUS THIS LEAD IS LOW WHEN FLIP-FLOP IS IN '1' STATE.
4. WAVEFORM AT TEST POINT #6 FOR RECEPTION OF 'A' (ASCII 3Ø1)

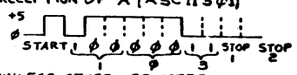

5. UNLESS OTHERWISE NOTED:
   RESISTORS = 1K ¼W 5%
   CAPACITORS = .01μf 100V 20%
   DIODES = D664

QTY.	REF DESIGNATION	DESCRIPTION	PART NO.	ITEM NO.
2	R12, R25	RES. 1.5K 1/2 W 5%	1300394	60
A/R		TUB THIN WALL #22 TEFLON (WHT)	9107265	59
1	R22	RES. 82 1/4W 5%	1301477	58
5	E1, E23, E27, E30, E46	I.C. DEC 5380	1910398	57
4	E2, E15, E33, E37	I.C. DEC 97401	1909973	56
9	E3, E4, E7, E8, E16, E20, E29, E38, E48	I.C. DEC 7474	1905547	55
3	E5, E13, E18	I.C. DEC 7493	1909054	54
5	E6, E10, E26, E28, E31	I.C. DEC 8271	1909615	53
2	E9, E14	I.C. DEC 5314	1910391	52
3	E11, E43, E47	I.C. DEC 7402	1909004	51
3	E12, E41, E44	I.C. DEC 7400	1905575	50
1	E17	I.C. MC1489L EIA RECIEVER	1910323	49
1	E19	I.C. DEC 7410	1905576	48
2	E21, E42	I.C. DEC 7404	1909086	47
1	E22	I.C. DEC 74193	1910018	46
1	E24	I.C. DEC 8815	1909713	45
2	E25, E39	I.C. DEC 7450	1905580	44
1	E32	I.C. MC1488L-EIA DRIVER	1910322	43
2	E34, E36	I.C. DEC 5384	1910394	42
2	E40, E43	I.C. DEC 8251	1909594	41
1	E35	I.C. DEC 74H00	1909056	40
52	C1-C50, C62, C64	CAP. .01μf 100V 20% DISC	1001610	39
6	C51-C56	CAP. 6.8μf 35V 20% TANT	1000067	38
2	C57, C61	CAP. .047μf DISC	1009678	37
1	C58	CAP. 33 PF MICA	1000009	36
1	C59	CAP. 100 PF MICA	1000016	35
1	C60	CAP. 68 PF MICA	1000014	34
1	C63	CAP. .001 μf 250V DISC	1000043	33
2	C65, C67	CAP. 10 PF 100V 5% MICA	1000006	32
1	C66	CAP. .47μf. 35V TANT	1005965	31
1	D1	DIODE, D662	1100113	30
14	D2-D15	DIODE, D664	1100114	29
3	R1, R4, R20	RES. 220, 1/4W 5%	1300271	28
1	R2	RES. 750 1/4W 5%	1301401	27
2	R3, R19	RES. 10K 1/4W 5%	1300479	26
2	R5, R18	RES. 3.3K 1/4W 5%	1300439	25
4	R6, R7, R13, R24	RES. 470 1/4W, 5%	1300316	24
1	R8	RES. 150 1/4W, 5%	1300250	23
2	R10, R15	RES. 1K, 1/4W, 5%	1300365	22
2	R11, R16	RES. 750 1W 5%	1302385	21
1	R14	RES. 1.5K, 1/4W, 5%	1300391	20
1	R21	RES. 330, 1/4W, 5%	1300295	19
1	R23	RES. 30K, 1/4W, 5%	1302394	18
1	R9	RES. 180 1/4W, 5%	1301322	17
1	R17	RES. 560, 1/2W, 5%	1300338	16
1	Q1	TRANSISTOR, DEC 30098	1503100	15
2	Q2, Q3	TRANSISTOR, DEC 6534D	1503409	14
1	T1	XFMR 8010	1609651	13
1	DL1	DELAY LINE 30 NANO SEC	1605528	12
1	Y1	CRYSTAL 19.6601 MHZ.	1809880-02	11
40		LUGS, SPLIT	9005735	10
1		CONNECTOR, 40 PIN	1209941	9
1/4		WIRE #22AW6 SOLID BUS	9107560-01	8
4		SPACER (CABLE CLAMP)	1202704	7
6		EYELET G54-11 STIMPSON	9006750	6
4		HANDLE FLIP CHIP-MAGENTA	9008337-06	5
1		ETCHED CIRCUIT BOARD	5009546	4
REF		MODULE HISTORY LIST	B-MM-M8650-YA-4	3
REF		ASSY/DRILLING HOLE LAYOUT	D-AN-M8650-YA-5	2
REF		X-Y COORDINATE HOLE LOC.	X-CO-M8650-YA-4	1

PARTS LIST

ETCH BOARD REV D1

IC TYPE	GND	+5V	5V/8	22	JUMPER LIST FROM PT	JUMPER LIST TO PT
DEC MC1488L	7	14(+5V)			JJ23-A	JJ23-B
8251	8	16			JH12-A	JH12-B
5384	1	8			JB13-A	JB13-B
74193	8	16			JB12-A	JB12-B
5314	1	8			JA12-A	JA12-B
8271	8	16			JA13-A	JA13-B
7493	10	5			JF24-A	JF24-B
DEC 5380	1	8			JF12-A	JF12-B
					JE13-A	JE13-B
					JE24-A	JE24-B
					JD24-A	JD24-B
					JD13-A	JD13-B
					JC24-A	JC24-B
					JC13-A	JC13-B

IC PIN LOCATIONS

DEC NO.	EIA NO.
DEC 5334D	MPS6534
DEC 3009B	2N3646
D664	IN3606
D662	IN645

SEMICONDUCTOR CONVERSION CHART

REV	DESCRIPTION	DATE	APPROVED
A	ORIGINATED	4-11-72	E. CLARKE
B		4-18-72	J. MCNAMARA
C		4-18-72	J. MCNAMARA
D		4-19-72	J. MCNAMARA

DRAWN E. CLARKE 4-11-72
CHECKED J. MCNAMARA 4-18-72
APPROVED J. MCNAMARA 4-19-72
MFG. 4-19-72
QUALITY ASSURANCE 4-19-72
NEXT ASSY USED ON A-ML-KL8-E
SIZE A SCALE 2/1 SHEET 1 OF 2

EQUIPMENT CORPORATION

TITLE: ASYNCHRONOUS DATA CONTROL

ECS M8650-YA-1 REV D

LCS M8650-YA-1

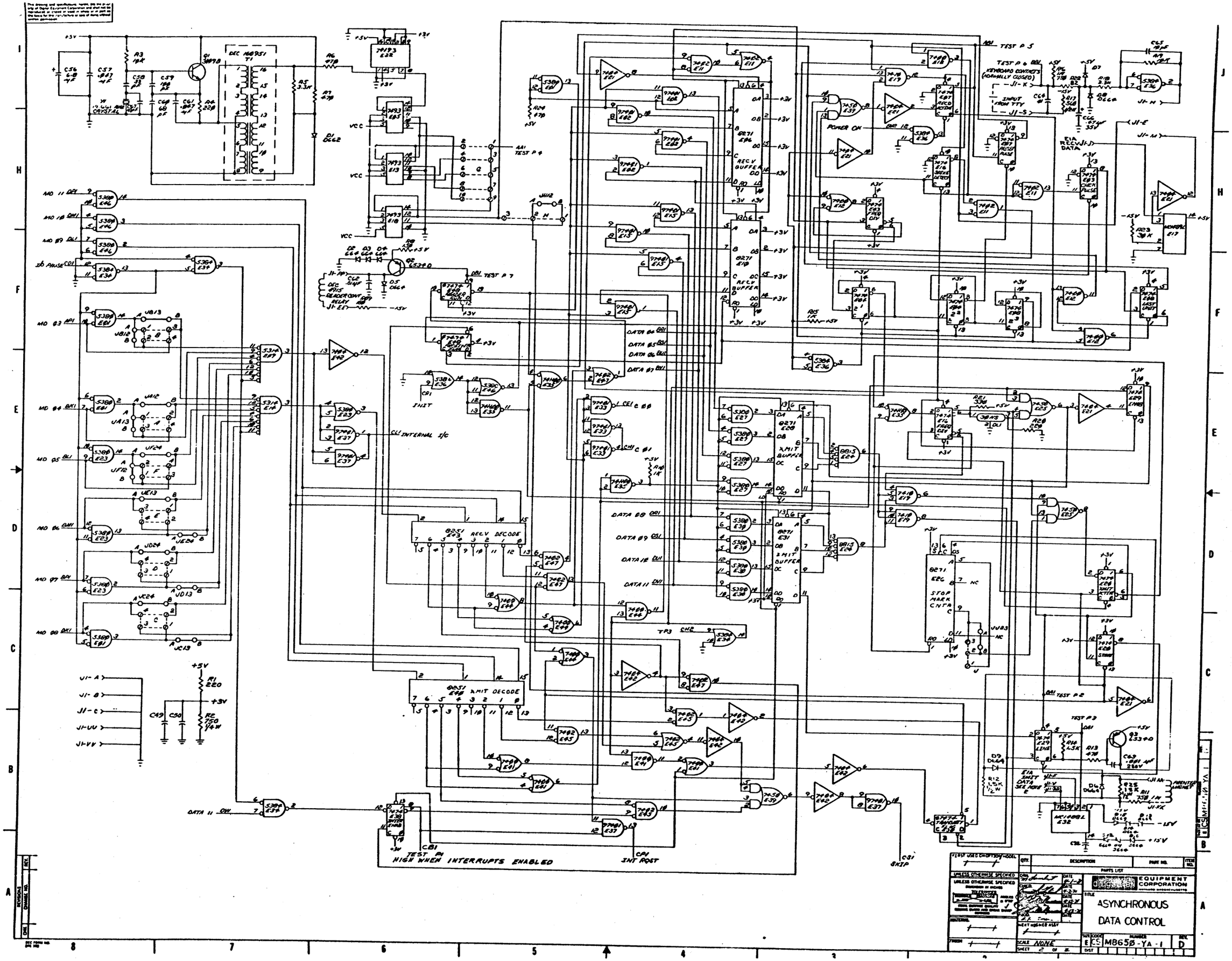

QTY.	DESCRIPTION	PART NO.	ITEM NO.
	PARTS LIST		

UNLESS OTHERWISE SPECIFIED

EQUIPMENT CORPORATION

TITLE: ASYNCHRONOUS DATA CONTROL

SIZE E | CODE CS | NUMBER M8650-YA-1 | REV. D

SCALE NONE

SHEET 2 OF 2

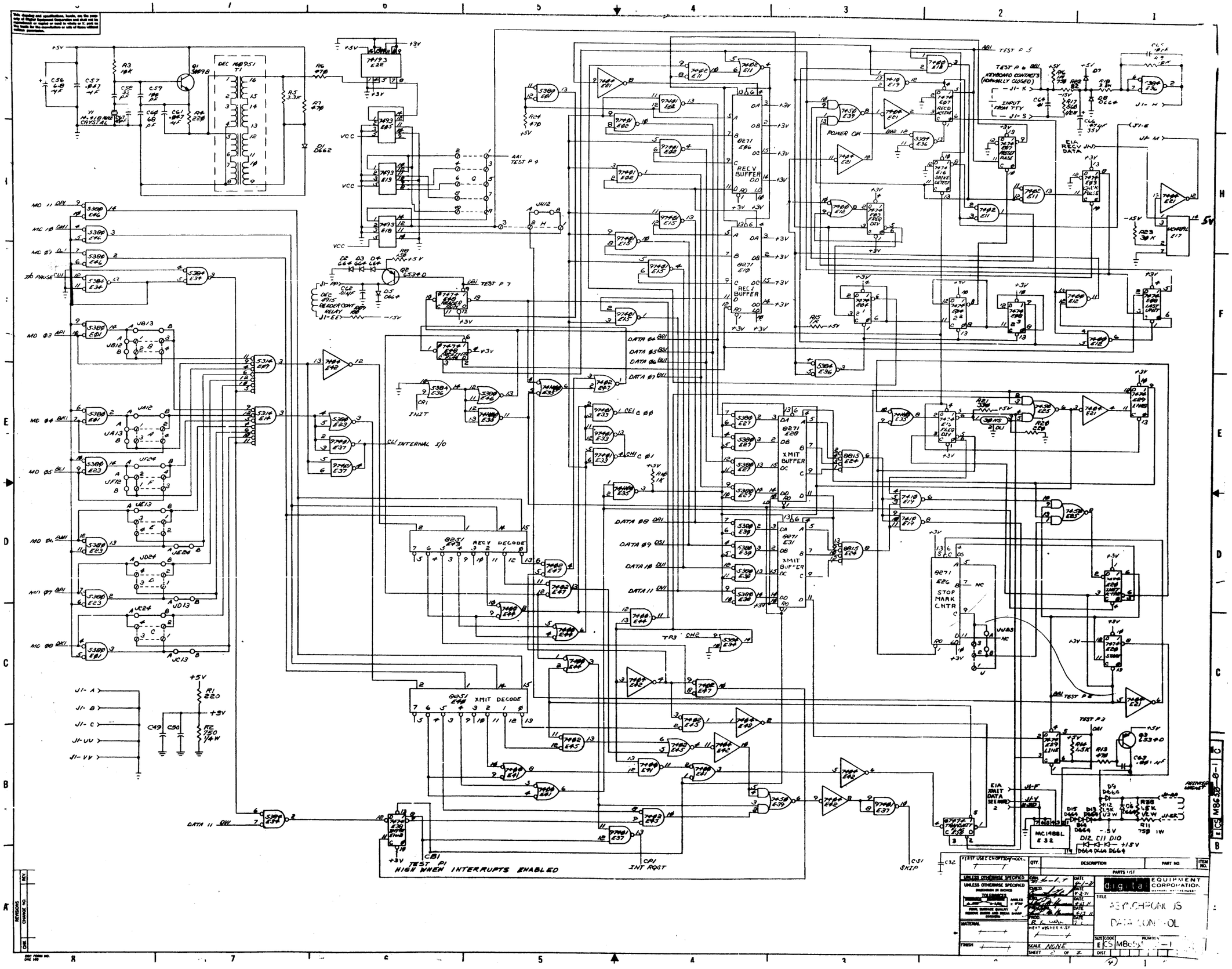

RECV BUFFER
XMIT BUFFER
RECV DECODE
XMIT DECODE
STOP MARK CNTR
POWER OK
TEST P 5
TEST P 4
TEST P 7
TEST P 2
TEST P 3
INTERNAL I/O
INIT
TEST P1
HIGH WHEN INTERRUPTS ENABLED
INT RQST
SKIP
DATA 11
DATA 08
DATA 09
DATA 10
DATA 07
DATA 06
DATA 05
DATA 04
DEC 16Ø951 T1
CRYSTAL
KEYBOARD CONTROLS (NORMALLY CLOSED)
INPUT FROM TTY
RECV DATA
LAST UNIT
PRINTER MAGNET
MC1488L E32
FIRST USE CHOPTION MODE
UNLESS OTHERWISE SPECIFIED
digital EQUIPMENT CORPORATION
ASYNCHRONOUS DATA CONTROL
SCALE NONE
SHEET 2 OF 2

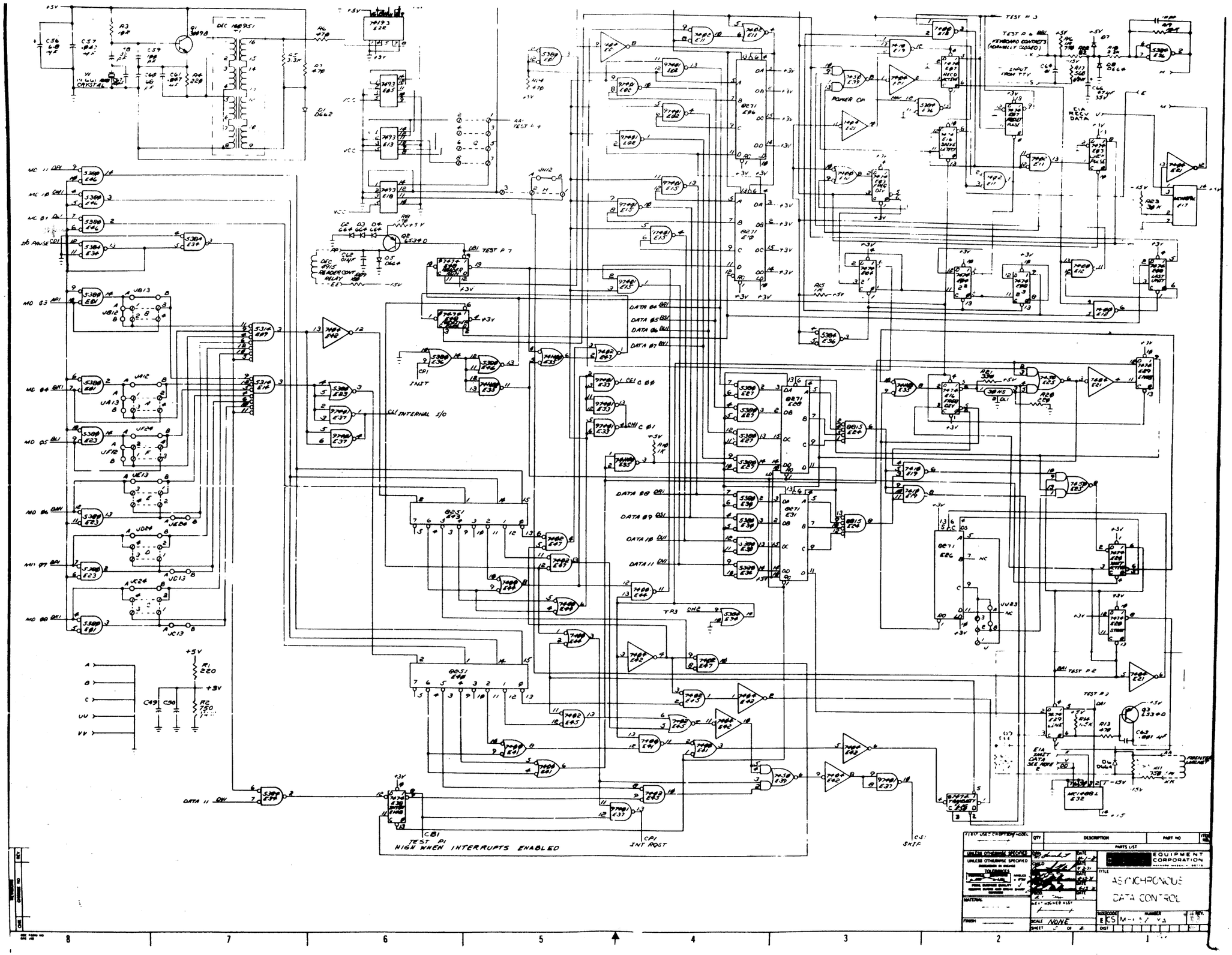

TEST P 1
HIGH WHEN INTERRUPTS ENABLED
INTERNAL I/O
INIT
POWER ON
TEST P 2
TEST P 3
TEST P 7
DATA 11
DATA 08
DATA 09
DATA 10
DATA 11
CRYSTAL
EQUIPMENT CORPORATION
ASYNCHRONOUS DATA CONTROL
SCALE NONE

This drawing and specifications, herein, are the property of Digital Equipment Corporation and shall not be reproduced or copied or used in whole or in part as the basis for the manufacture or sale of items without written permission.

WIRE TABLE

ITEM NO.	DESCRIPTION AWG	DESCRIPTION COLOR	PAIR NO.	FROM CONNECTION	FROM WITH	TO CONNECTION	TO WITH
3	22	BLK	1	P1-2	2	P2-KK	5
3		RED		P1-3	2	P2-S	
3,7		SHIELD		SEE NOTE #2	—	P2-A(NOTE #3)	
3		BLK	2	P1-4	2	P2-EE	
3		WHT		P1-5	2	P2-AA	
3,7		SHIELD		SEE NOTE #2	—	P2-UU(NOTE #3)	
3		BLK	3	P1-6	2	P2-PP	
3		GRN		P1-7	2	P2-K	
3,7		SHIELD		SEE NOTE #2	—	P2-VV(NOTE #3)	
6	22	BLK	—	P2-E	5	P2-H	5

NOTES:

1. * ASTERISKS INDICATE CAVITIES NOT USED OR DESIGNATED BY LETTERS.
2. DRAIN WIRES TO BE CUT BACK TO OUTER INSULATION ON P1 END OF CABLE ONLY. SHIELDS TO BE CUT BACK TO OUTER INSULATION ON BOTH ENDS OF CABLES.
3. DRAIN WIRES ON P2 END OF CABLE TO BE EACH ENCLOSED WITH ITEM #7 (TUBING) FROM END OF CABLE JACKET TO POINT WHERE THEY ENTER P2 CONNECTOR.
4. ITEM #6 (WIRE) TO BE APPROXIMATELY ONE (1) INCH LONG.

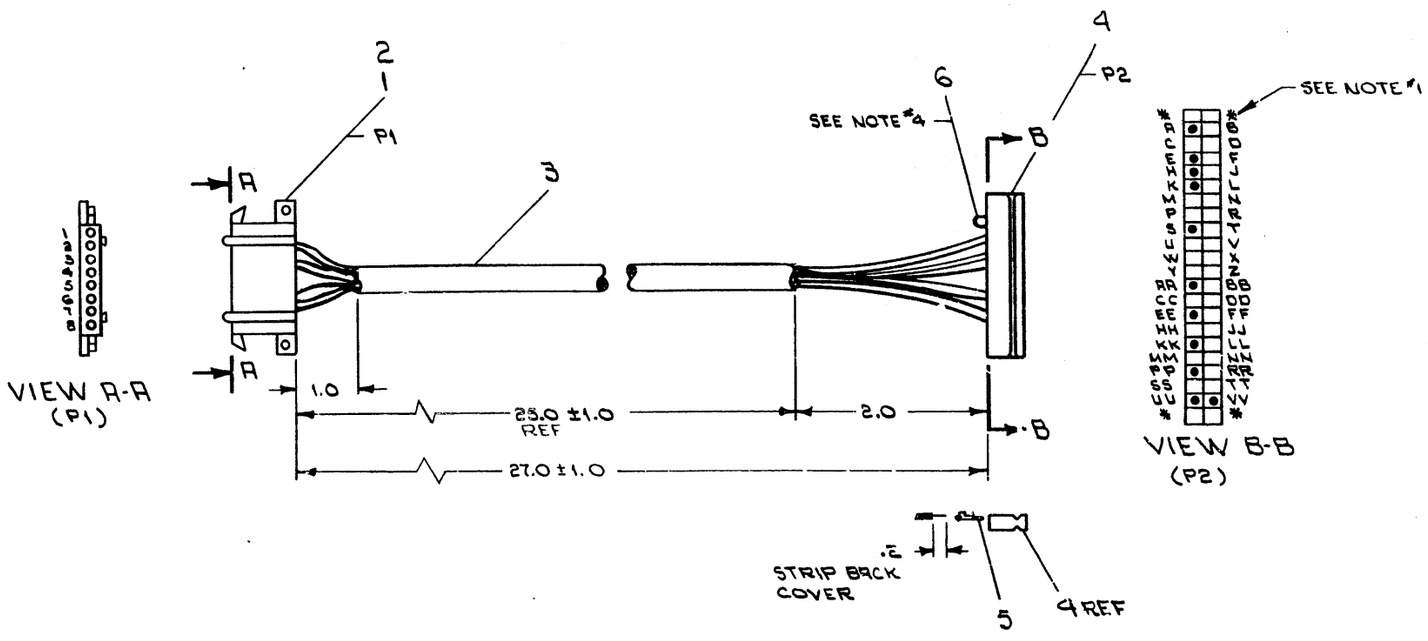

QTY.	DESCRIPTION	PART NO.	ITEM NO.
A/R	TUB. #18 TEF. THINWALL NAT	9107278-11	7
A/R	WIRE, #22 AWG STRD TEF BLK	9107350-00	6
11	SOCKET, BERG #47706	1210089-6	5
1	HOUSING, BERG #20383	1210090-0	4
A/R	CABLE, BELDEN #8777-3PR SHLD	9107723-0	3
6	CONTACT MATE-N-LOCK (FEMALE)	1209379	2
1	CONN. MATE-N-LOCK (FEMALE)	1209340-00	1

PARTS LIST

FIRST USED ON OPTION/MODEL: PDP-8E

DO NOT SCALE DRAWING
UNLESS OTHERWISE SPECIFIED
DIMENSION IN INCHES
TOLERANCES
ANGLES ± 0°30'
FINAL SURFACE QUALITY
REMOVE BURRS AND BREAK SHARP CORNERS

MATERIAL: SEE PARTS LIST

FINISH

DRN. DATE 7APR 71
CHK'D. DATE 4-8-71
ENG. DATE 4-8-71
PROJ. ENG. DATE 4-8-71
PROD. DATE 4/9/71

NEXT HIGHER ASSY: A-ML-KL8-E-0

SCALE: NONE
SHEET 1 OF 1

digital EQUIPMENT CORPORATION
MAYNARD MASSACHUSETTS

TITLE: CABLE ASSEMBLY (KL8E)

SIZE D | CODE IA | NUMBER 7008360-0-0 | REV A
DIST.

REVISIONS

CHK	CHANGE NO	REV
	KL8E-00002	A

DEC FORM NO. DRD 100

This drawing and specifications, herein are the property of Digital Equipment Corporation and shall not be reproduced or copied or used in whole or in part as the basis for the manufacture or sale of items without written permission

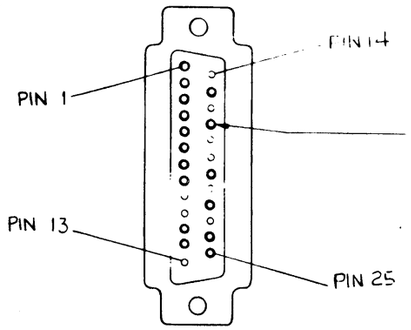

P2
SECTION A-A

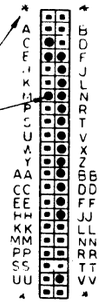

P1
SECTION B-B

WIRE TABLE

ITEM NO.	DESCRIPTION AWG	COLOR	FROM CONNECTION	WITH	TO CONNECTION	WITH
3	22	BLK	P1-VV	CRIMP	P2-7	SOLD.
		GRN/WHT	P1-C		P2-25	
		GRN/BLK	P1-JJ		P2-12	
		ORN/BLK	P1-FF		P2-11	
		RED	P1-DD		P2-20	
		GRN	P1-BB		P2-8	
		BLU/WHT	P1-Z		P2-6	
		ORN	P1-X		P2-22	
		BLU	P1-V		P2-4	
		WHT	P1-T		P2-5	
		BLU/BLK	P1-R		P2-17	
		BLK/WHT	P1-N		P2-15	
		RED/WHT	P1-L		P2-24	
		WHT/BLK	P1-J		P2-3	
		RED/BLK	P1-F		P2-2	SOLD.
5		BLK	P1-E	CRIMP	P1-M	CRIMP
5	22	BLK	P2-1	SOLD.	P2-7	SOLD.

NOTES:
1. EACH SOLDERED CONN. ON P2 SHALL BE INSULATED WITH A 1/4" PIECE OF HY-SHRINK TUBING (ITEM #5).
2. • INDICATES PINS USED ON P1 (BERG CONN)
   ③ INDICATES PINS USED ON P2 (CINCH PLUG)
   * DENOTES CAVATIES NOT USED OR DESIGNATED BY LETTER ON P1 (BERG CONN)

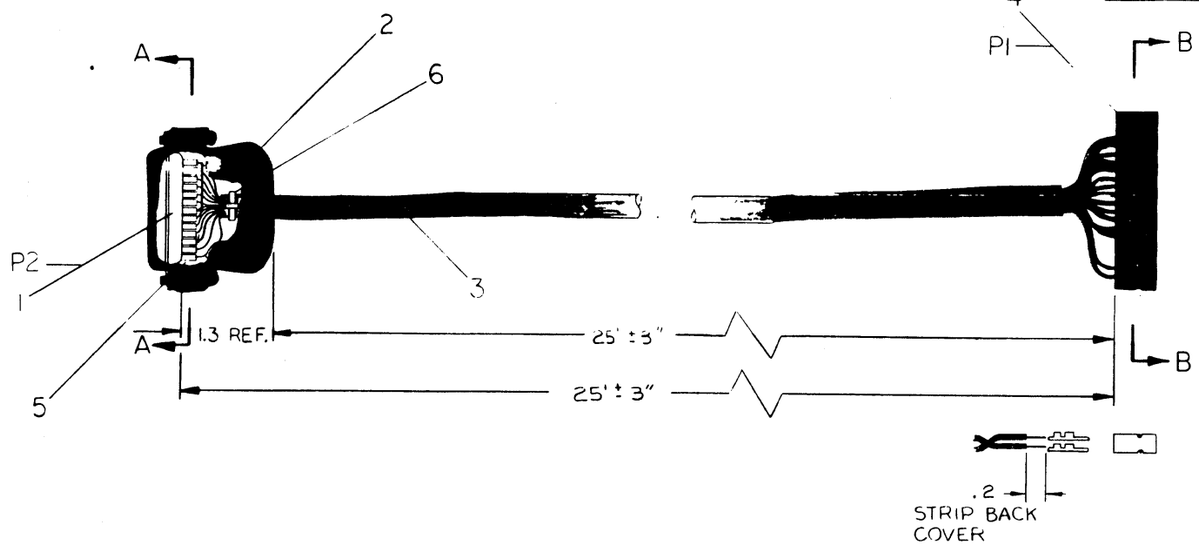

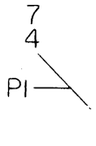

A/R	WIRE #22 AWG STRD TEF BLK	9107350-0-0	8
17	PIN, CONN. #47706 BERG	1210089-6	7
1	TIE WRAP, PANDUIT #SST-1B	9007031	6
16	TUBING, HEAT SHRINK 1/8	9107255	5
1	HOUSING #20383 BERG	1210090-0	4
A/R	CABLE, BELDON 15 CONN.	9107672	3
1	HOOD, PLUG CINCH #DB51226-1	1205885	2
1	PLUG, CINCH #DB-25P	1205886	1
QTY.	DESCRIPTION	PART NO.	ITEM NO.

PARTS LIST

REVISIONS		
CHK	CHANGE NO	REV
	BC01V-00001	A

DEC FORM NO 100

FIRST USED ON OPTION/MODEL

DO NOT SCALE DRAWING
UNLESS OTHERWISE SPECIFIED
DIMENSION IN INCHES
TOLERANCES
DECIMALS ± .005 FRACTIONS ± 1/64 ANGLES ± 0°30'
FINAL SURFACE QUALITY
REMOVE BURRS AND BREAK SHARP CORNERS

MATERIAL SEE PARTS LIST

FINISH

DRN		DATE
CHK'D		DATE
ENG		DATE
PROJ ENG		DATE
PROD		DATE

NEXT HIGHER ASSY
A-FLDP8-EA-0

SCALE NONE
SHEET 1 OF 1

digital EQUIPMENT CORPORATION
MAYNARD MASSACHUSETTS

TITLE
CABLE ASS'Y
(BC01V)

SIZE	CODE	NUMBER	REV.
D	[illegible]	[illegible]-0	A

DIST

SIZE	CODE	NUMBER	REV
D	07426	BC01V-25-0	A

This drawing and specifications, herein, are the property of Digital Equipment Corporation and shall not be reproduced or copied or used in whole or in part as the basis for the manufacture or sale of items without written permission.

DIGITAL EQUIPMENT CORPORATION
MAYNARD, MASSACHUSETTS

ENGINEERING SPECIFICATION

DATE 3/15/71

TITLE KL8/E Asynchronous Data Control (M8650)

REVISIONS

REV	DESCRIPTION	CHG NO	ORIG	DATE	APPD BY	DATE

Abstract

The KL8/E is a single line asynchronous data control for the PDP8-E. A variety of speeds are offered and split lugs are provided such that any desired device codes may be wired in. Factory wiring provides the standard console teleprinter device codes 03 and 04. Both 20 milliampere and EIA/CCITT levels are offered at 110 baud. In the higher speed ranges, only EIA/CCITT interface is offered. The EIA/CCITT interface applies to data leads only; no modem control is provided. This specification includes a complete discussion of the current driver capabilities, the selection of device codes, the selection of speeds, and the configurations available under each option designation.

ENG	APPD	SIZE	CODE	NUMBER	REV
John E. McNamara	John E. McNamara	A	SP	KL8-E-1	

DEC FORM NO. DRA 107

1 - 17

ENGINEERING SPECIFICATION — CONTINUATION SHEET

TITLE KL8/E Asynchronous Data Control

I. General Description

The KL8/E provides complete facilities for interfacing an asynchronous device such as a teleprinter or display to the PDP8/E. Split lugs are provided such that a KL8/E may be assigned any two device codes desired. In this manner a quantity of KL8/E units may be used on a single PDP8/E to provide a multiple teleprinter capability. The instruction set is similar to that used on previous Family-of-8 console teleprinter controls and asynchronous data controls. Several different clock speed and interface options are offered.

II. Physical

The KL8/E is a single quad board which plugs directly into the Omnibus. The same etched board (M8650) is used for all KL8/E options listed below, with a crystal change or cable change determining the option designation applicable.

III. Options

The KL8/E is available in the following options:

Designation	Receive Speed	Transmit Speed	Interface Type	(Board Type)
KL8/E	110 Baud	110 Baud	20 milliampere	M8650
KL8/EA	110 Baud	110 Baud	EIA Data Leads	M8650
KL8/EB	150 Baud	150 Baud	EIA Data Leads	M8650 YA
KL8/EC	300 Baud	300 Baud	EIA Data Leads	M8650 YA
KL8/ED	600 Baud	600 Baud	EIA Data Leads	M8650 YA
KL8/EE	1200 Baud	1200 Baud	EIA Data Leads	M8650 YA
KL8/EF	150 Baud	1200 Baud	EIA Data Leads	M8650 YA
KL8/EG	150 Baud	2400 Baud	EIA Data Leads	M8650 YA

The M8650 and M8650 YA boards use an identical etched board, but differ in their parts lists. The M8650 uses a DEC Part # 18-09880-01 14.418 MHz crystal, while the M8650 YA uses a DEC Part # 18-09880-02 19.661 MHz crystal. The 14.418 MHz crystal is used to obtain the 110 baud frequency, while the 19.661 MHz crystal is used to obtain the 150, 300, 600, 1200, and 2400 baud frequencies. This means that if one desires to change speeds in the field, a crystal change is involved to change to or from the 110 baud speed, plus re-labelling the board handle. To change amongst the speeds that are multiples of 150 baud, only jumper changes are involved.

SIZE	CODE	NUMBER	REV
A	SP	KL8-E-1	

DEC FORM NO 16-1022 DRA 108

Both the M8650 and M8650 YA boards contain the appropriate circuitry for both 20 milliampere and EIA operation. A noise suppression network in the 20 milliampere circuitry protects against high frequency noise, but in so doing limits the operating speed of the 20 milliampere interface to 110 baud. The 20 milliampere circuitry is automatically connected when the 7008360 interface cable assembly supplied with the KL8/E option is connected to the board. This cable terminates in a Mate-N-Lock connector compatible with PDP8/E teleprinters, PDP-11 teleprinters, and Mate-N-Lock equipped PDP-15 teleprinters. In like manner, the EIA interface circuitry is automatically connected when the BC01V cable assembly (or BC05C) supplied with the KL8/EA, EB,EC,ED,EE,EF, and EG options is connected. (See Section X)

The EIA interface circuitry meets all present requirements of EIA Specification RS232-C and CCITT Recommendation V24, but interfaces the DATA LEADS ONLY. No modem control is supplied - Data Terminal Ready and Request To Send are held asserted. Use of these options on modems arranged for automatic origination or automatic answering of dial telephone calls is not recommended. The EIA interfaces provided are intended for use with private(non-switched) wire modems operated on a full duplex basis or with a Null Modem (H308 or H312) and a terminal with an EIA interface.

IV. Specifications - Environment

Temperature: Ø degrees to 55 degrees C (Operating)
Humidity: 10% to 90% non-condensing (Operating)

During storage, temperature extremes of -15 degrees C and +65 degrees C can be tolerated.

V. Specifications - Communications Variables

A. Type or Transmission: Asynchronous
Type of Reception: Asynchronous

B. Number of Start Elements Per Character: One

C. Number of Data Elements Per Character: Eight

D. Number of Stop Elements Per Character: One or Two (Jumper selectable on board. Unless otherwise specified, the KL8/E and KL8/EA options will be supplied jumpered for two stop elements and all other options will be supplied jumpered for one stop element.)

E. Receiver Sample Rate: 16 times the baud rate

F. Capabilities of the 20 milliampere driver:

For current calculation purposes, the driver circuit may be envisioned as one lead returned through 750 ohms to -15 volts and the other lead as going to a point connected to -15 through 1 K and to +5 through a 6534D PNP transistor, the state of which is controlled by the KL8/E transmitter circuitry. If one assumes a maximum voltage drop across the transistor when saturated as 1 volt and a minimum potential difference between -15 and +5 of 19.75 volts, the output circuit may be envisioned as an 18.75 volt source in series with a 750 ohm resistor, or at worst a 788 ohm resistor. This arrangement would deliver 24 milliamperes in the short circuit case and would tolerate 150 additional ohms for resistance of the teleprinter magnet circuit and the wiring to the teleprinter magnet. The following wire resistances may be of assistance: (Annealed copper wire, 20 degrees C)

26 AWG : 40.81 ohms/1000 feet
24 AWG : 25.67 ohms/1000 feet
22 AWG : 16.14 ohms/1000 feet
19 AWG : 8.05 ohms/1000 feet

In calculating permissable loop length, remember that the above figures are for one conductor only. You must measure the distance from the KL8/E to the teleprinter AND BACK to obtain a footage distance for use in the above calculation. In addition, certain environmental influences such as radio interference, transformers, possibility of physical damage, etc. may cause the maximum operating distance to be less than that indicated by simple resistive calculations. Extreme caution should be used in any installation over 1500 feet.

G. Capabilities of the 20 milliampere receiver:

For current calculation purposes, the receiver circuit may be envisioned as one lead returned through 560 ohms to -15 volts and the other lead returned to both +5 through 750 ohms and to a -.7 volt diode drop through 82 ohms. The resultant current will be 21 milliamperes for a zero ohm resistance loop to the keyboard contacts and 18 milliamperes in the case of a 150 ohm loop such as that mentioned in Section V-F above. Intermediate values can be determined from straight line interpolation between these points. It is not recommended that contact currents less than 18 milliamperes be used.

The 20 milliampere current receiving circuitry contains

an integrator circuit that may be modelled as a capacitor in series with 402 ohms. The standard value for this capacitor is .47 mfd. This arrangement assists in providing noise reduction by integrating high frequency noise such that its amplitude is insufficient to operate the Schmidt Trigger circuit that follows the integrator. Unfortunately, the integration reduces the rate-of-rise of signals, introducing an additional 2% distortion to the received signal at 110 baud. The high sampling rate of the receiver (16 times the baud rate) makes this additional distortion inconsequential except in the case of very extreme distortion already being present in the received signals. At speeds greater than 110 baud, EIA interface circuitry is used, bypassing both the 20 milliampere integrator circuit and the 20 milliampere Schmidt Trigger circuit.

Should it be desired to operate in current loop mode at speeds greater than 110 baud, the .47 mfd capacitor should be reduced in size by the same proportion as the speed is increased; i.e. if you double the speed, halve the value of the capacitor. This product is not specified to operate in current loop mode at speeds greater than 110 baud and the suggestions given above should not be construed as a commitment on the part of Digital Equipment Corporation to make this product operate in current loop mode at any speed other than 110 baud.

H. Capabilities of the Reader Run Control:

For current calculation purposes, this circuitry may be modelled as one lead being connected to -15 through 180 ohms and the other lead connected to +5 through a 6534D PNP transistor and a 150 ohm resistor. Due to the presence of diode clamps, transistor voltage drop, etc., this second lead may be envisioned as being connected to a + 7/10ths volt source or floating, depending upon the state of the 6534D transistor. The circuit formed by the above elements may be considered as a 14 volt source in series with 180 ohms.

The reader run leads operate a Wheelock #30002 reed relay mounted on a DEC 4915 teleprinter reader control card mounted within the call control area of the Teletype.* This relay has a coil resistance of 920 ohms and is specified to operate by the time the voltage across its coil reaches 9.6 volts. There is a ± 10% tolerance on coil resistance, so a worst case current of 12 milliamperes is required to achieve 9.6 volts across 828 ohms. The 12 milliamperes would cause a 2.3 volt drop across the 180 ohm resistor if that resistor were at the 189 ohm extreme of its ± 5% specification. This means that no more than 14.0 - 11.9 = 2.1 volts can

* "Teletype" is a registered trademark of Teletype Corporation, Skokie, Ill. USA

be dropped by the passage of 12 milliamperes through the wiring to the reader run. That sets a resistance limit of 175 ohms for the reader run control wiring from the KL8/E to the Teletype (and back). (See Section X)

I. EIA Signals Provided

Circuitry on the M8650 and M8650 YA modules conditions the transmitted data and received data to the specifications of Electronic Industries Association (EIA) Specification RS 232 C and Committe Consultatif International Telephonique et Telegraphique (CCITT) Recommendation V24.

The signals and their assigned pins on the 40 pin header found on the M8650 are as follows:

Protective Ground	UU	
Send Data	F	
Receive Data	J	
Request To Send	V	(Held Asserted)
Signal Ground	VV	
Data Terminal Ready	DD	(Held Asserted)

Assertion of the Request To Send lead is required with such modems as the Bell System 103F to maintain them in Full Duplex transmission mode on a private (non-switched) line.

Assertion of the Data Terminal Ready lead is required with such modems as the Bell System 103A to maintain an established dial-up connection.

Note that, since the Request To Send lead is held true, the M8650 and M8650 YA are suitable ONLY FOR FULL DUPLEX OPERATION (An additional reason is that there is no interlocking logic in the M8650 and M8650 YA to make the transmitter and receiver dependent upon each other in the fashion that Half Duplex would require).

Note further that, since Data Terminal Ready is held true, the M8650 and M8650 YA are suitable for dial telephone connection use (such as with the Bell System 103A) ONLY UNDER MANUAL CONTROL. In other words, these modules should not be used in dial telephone connections arranged for the automatic origination of calls or arranged for the automatic answering of calls. The reason for this is that Data Terminal Ready must be negated for a dial-up connection to be dropped when the call is over and the M8650 and M8650 YA are incapable of doing this. In addition, they do not monitor the leads necessary to tell them when to take such action.

In summary, the KL8/E, EA, EB, EC, ED, EE, EF, and EG do not have modem control. Thus, their use with modems is limited to full duplex private line and manual use on the dial-up telephone network.

J. Capabilities of the EIA interface

Total cable length from the KL8/EA(EB, EC,etc) to the associated modem or terminal must not exceed 50 feet under any circumstances.

K. Use With EIA Interface Terminals

The BC01V and BC05C cable assemblies end in male 25 pin connectors in accordance with the EIA specification requirements for data terminal equipment. Likewise, most terminals that have EIA interfaces also employ male 25 pin connectors, as they too are data terminal equipment in the language of the EIA specification.

The EIA specification, in specifying male connectors for data terminal equipment, envisions that each piece of data terminal equipment will be connected to a piece of data communications equipment. The typical connection which the specification envisions is data terminal equipment - modem-communications facility - modem - data terminal equipment. Thus, to stay within the specification when connecting a piece of data terminal equipment to another piece of data terminal equipment, one must introduce the modem-communications facility-modem link. In cases where the two terminals are more than 50 feet apart this would be done with real modems and a real communications facility. Where distances less than fifty feet are involved, Digital Equipment Corporation has devices called Null Modems which contain a female 25 pin connector,a length of cable that transposes the transmitted an received data leads such as a communications facility would,and a second female connector at the opposite end. Use of the Null Modem (H312 or H308) permits the same cables and other hardware to be used for both local and remote terminal applications.

Should a null modem not be available in a VT06 installation, the male/male cord supplied with the VT06 could be removed and the BC01V plugged directly into the female receptacle on the VT06 provided that the following lead swaps are made in the BC01V by swapping pins in the forty pin connector: Swap F & J; Move V to BB.

The above pin changes are not recommended as a general thing, as they result in non-standard cables.

VI. Programming

The KL8/E uses an augmented version of the instruction set used on Family-of-8 console teleprinters and teleprinter controls such as the PT08.

The instruction set is as follows:

6XX0 Clear Keyboard Flag (KCF)

Clears the keyboard flag without setting the reader run flip-flop. The AC is not cleared by this instruction.

6XX1 Skip on Keyboard Flag (KSF)

Increments the contents of the Program Counter if the keyboard flag is set,so that the next sequential instruction is skipped.

6XX2 Clear Keyboard Flag (KCC)

Clears the keyboard flag and AC and sets the reader run flip-flop. This action allows the hardware to begin assembling the next input character in the TTI register. If the reader is activated and there is tape in the reader, a serial character is read from the tape and is assembled in the TTI register. The keyboard can also load characters into the TTI register provided that the reader is deactivated. In either case, the keyboard flag is set when the character is assembled in the TTI register.

6XX4 Read Keyboard Buffer Static (KRS)

ORs the contents of the TTI register with AC4 through 11, and leaves the result in AC4-11. This is termed a static command because neither the AC nor the keyboard flag is cleared.

6XX5 Set/Clear Interrupt Enable (KIE)

Sets or clears the interrupt enable flip-flop as determined by AC11. If AC11 is asserted, an interrupt request will be generated when the KL8/E keyboard or teleprinter flag is set. If AC11 is negated interrupt requests cannot be generated.

6XX6 Read Keyboard Buffer Dynamic (KRB)

Performs the combined operations of the KCC and KRS instructions. Clears the AC and keyboard flag and transfers the contents of the TTI register to AC4 through AC11. This instruction also sets the reader run flip-flop to begin assembly of another character in the TTI register. When this operation is complete, the keyboard flag is set to indicate that another character is available.

The computer clears all flags which are on the clear flags bus (including both the keyboard flag and the reader run enable) when the console CLEAR pushbutton is depressed or when a Clear All Flags instruction is given. This means that the user program must set the reader enable by means of a KCC or KRB instruction before the first input data can be received from the reader. After the first character is assembled, the KRB instructions used to read that character and the succeeding characters will operate the reader appropriately.

6YY0 Set Teleprinter Flag (TFL)

Sets the teleprinter flag to ready the logic for another character.

6YY1 Skip on Teleprinter Flag (TSF)

If the teleprinter flag is set, increments the contents of the program counter by one so that the next sequential instruction will be skipped.

6YY2 Clear Teleprinter Flag (TCF)

Clears the teleprinter flag. This instruction can be microprogrammed with TPC.

6YY4 Load Teleprinter and Print (TPC)

Transfers AC bits 4-11 to the TTO register and starts shifting the character out to the printer/punch units. This instruction does not clear the teleprinter flag. This instruction can be microprogrammed with TCF to produce TLS.

6YY5 Skip on Printer or Keyboard Flag (TSK)

Skips the next instruction if the keyboard flag or printer flag is set and the interrupt enable flip-

flop is set.

6YY6 Load Teleprinter Sequence (TLS)

This instruction combines TCF and TPC. The teleprinter flag is cleared and the contents of AC bits 4-11 are transferred to the TTO register where the hardware shifts the character out to the printer/punch unit. Then the shifting operation has finished outputting the character and is ready for another character, the teleprinter flag is set. The whole operation, from the time at which the TLS has cleared the flag and the TTO starts character transfer, until the time the hardware finishes with the character and again sets the flag, requires 100 milliseconds at 110 baud.

Since a Clear All Flags instruction or operation of the CLEAR button on the console will cause the teleprinter output flag to be cleared, it is necessary that each program set the flag by means of a TFL instruction before commencing a teleprinter output sequence for the first time.

In all of the above instructions the device code has been represented as XX for keyboard instructions and YY for teleprinter instructions. In the case of the console teleprinter, these would be device codes 03 and 04 respectively. For further information on device codes, consult Secion VII of this specification.

VII. Device Code Selection

All input/output devices on a PDP8/E (or other Family-of-8 machine) have device codes. These device codes determine which unique input/output device responds to a given instruction. In a typical I/O instruction, such as 6031, the "6" indicates that this is an I/O instruction; the"03"indicates that the device having device code 03 is the device that is to respond to the instruction; and the "1" determines exactly what type of input/output operation is to take place at device 03.

It is vitally necessary that no two input/output devices on the same PDP8/E system have the same device code. If, for example, two devices use code 03, the instruction 6031 would cause a skip on teleprinter receiver flag if either flag was set. Instruction 6036 would probably OR together the contents of both receiver input registers, even if one contained only a partially assembled character - so long as one of them had the receiver flag set. In summary, a multiple teleprinter system (or any multi-input/output device system) must have unique device codes for each device so that the program can address each device individually.

Since there are a limited number of possible device codes in a PDP8/E, no assignment of device codes for large multi-teleprinter systems can be made. It is suggested, however, that the following device codes be used first:

03/04 Console teleprinter receive/transmit
30/31 Second KL8/E teleprinter receive/transmit
32/33
34/35
36/37

For PT08 compatibility 40/41,42/43,44/45,46/47 may be used, as long as no DP8-E Synchronous Modem Control is used.

To obtain additional device codes, determine which device codes you do not have yet on your system. Then write down the desired device code as two binary numbers, labelling the most significant bit "MD3", the next "MD4", the next"MD5", the next "MD6", the next "MD7", and the last "MD8". For example, for device code 03:

Octal:		0			3		
Binary:	0	0	0	0	1	1	
Label:	MD3	MD4	MD5	MD6	MD7	MD8	
Split Lug Group:	B	A	F	E	D	C	

The "Split Lug Groups" are explained on the next page.

In the lower right hand corner of the M8650/M8650YA board are split lugs which determine the device code to which the receiver will respond and the device code to which the transmitter will respond. The split lugs are arranged in groups of four. Each group has an alphabetic designation (A-F), and each split lug within a group has a numeric designation (1-4). A typical layout is shown below:

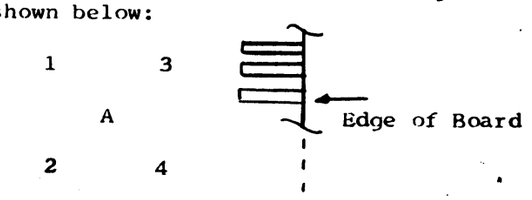

The correct strapping for each possible RECEIVER device code is given below:

	Group A	Group B	Group C	Group D	Group E	Group F
00	1-3	1-2	1-2	1-2	2-4	2-1
01	1-3	1-2	4-2	1-2	2-4	2-1
02	1-3	1-2	1-2	4-2	2-4	2-1
03	1-3	1-2	4-2	4-2	2-4	2-1
04	1-3	1-2	1-2	1-2	3-4	2-1
05	1-3	1-2	4-2	1-2	3-4	2-1
06	1-3	1-2	1-2	4-2	3-4	2-1
07	1-3	1-2	4-2	4-2	3-4	2-1
10	1-3	1-2	1-2	1-2	2-4	3-1
11	1-3	1-2	4-2	1-2	2-4	3-1
12	1-3	1-2	1-2	4-2	2-4	3-1
13	1-3	1-2	4-2	4-2	2-4	3-1
14	1-3	1-2	1-2	1-2	3-4	3-1
15	1-3	1-2	4-2	1-2	3-4	3-1
16	1-3	1-2	1-2	4-2	3-4	3-1
17	1-3	1-2	4-2	4-2	3-4	3-1
20	4-3	1-2	1-2	1-2	2-4	2-1
21	4-3	1-2	4-2	1-2	2-4	2-1
22	4-3	1-2	1-2	4-2	2-4	2-1
23	4-3	1-2	4-2	4-2	2-4	2-1
24	4-3	1-2	1-2	1-2	3-4	2-1
25	4-3	1-2	4-2	1-2	3-4	2-1
26	4-3	1-2	1-2	4-2	3-4	2-1
27	4-3	1-2	4-2	4-2	3-4	2-1

IMPORTANT NOTICE: Device codes 03 for receiver and 04 for transmitter are factory wired by means of machine inserted jumpers located in the split lug groups A,B,C,D,E,&F.
CUT THESE JUMPERS BEFORE ADDING THE JUMPERS LISTED ABOVE.

Continuation of receiver device code strapping table:

	Group A	Group B	Group C	Group D	Group E	Group F
30	4-3	1-2	1-2	1-2	2-4	3-1
31	4-3	1-2	4-2	1-2	2-4	3-1
32	4-3	1-2	1-2	4-2	2-4	3-1
33	4-3	1-2	4-2	4-2	2-4	3-1
34	4-3	1-2	1-2	1-2	3-4	3-1
35	4-3	1-2	4-2	1-2	3-4	3-1
36	4-3	1-2	1-2	4-2	3-4	3-1
37	4-3	1-2	4-2	4-2	3-4	3-1
40	1-3	4-2	1-2	1-2	2-4	2-1
41	1-3	4-2	4-2	1-2	2-4	2-1
42	1-3	4-2	1-2	4-2	2-4	2-1
43	1-3	4-2	4-2	4-2	2-4	2-1
44	1-3	4-2	1-2	1-2	3-4	2-1
45	1-3	4-2	4-2	1-2	3-4	2-1
46	1-3	4-2	1-2	4-2	3-4	2-1
47	1-3	4-2	4-2	4-2	3-4	2-1
50	1-3	4-2	1-2	1-2	2-4	3-1
51	1-3	4-2	4-2	1-2	2-4	3-1
52	1-3	4-2	1-2	4-2	2-4	3-1
53	1-3	4-2	4-2	4-2	2-4	3-1
54	1-3	4-2	1-2	1-2	3-4	3-1
55	1-3	4-2	4-2	1-2	3-4	3-1
56	1-3	4-2	1-2	4-2	3-4	3-1
57	1-3	4-2	4-2	4-2	3-4	3-1
60	4-3	4-2	1-2	1-2	2-4	2-1
61	4-3	4-2	4-2	1-2	2-4	2-1
62	4-3	4-2	1-2	4-2	2-4	2-1
63	4-3	4-2	4-2	4-2	2-4	2-1
64	4-3	4-2	1-2	1-2	3-4	2-1
65	4-3	4-2	4-2	1-2	3-4	2-1
66	4-3	4-2	1-2	4-2	3-4	2-1
67	4-3	4-2	4-2	4-2	3-4	2-1
70	4-3	4-2	1-2	1-2	2-4	3-1
71	4-3	4-2	4-2	1-2	2-4	3-1
72	4-3	4-2	1-2	4-2	2-4	3-1
73	4-3	4-2	4-2	4-2	2-4	3-1
74	4-3	4-2	1-2	1-2	3-4	3-1
75	4-3	4-2	4-2	1-2	3-4	3-1
76	4-3	4-2	1-2	4-2	3-4	3-1
77	4-3	4-2	4-2	4-2	3-4	3-1

IMPORTANT NOTICE: Device codes 03 and 04 for receiver and transmitter respectively are factory wired by means of machine inserted jumpers located in the split lug groups A,B,C,D,E,&F. CUT THESE JUMPERS BEFORE ADDING THE JUMPERS LISTED ABOVE.

The correct strapping for each possible TRANSMITTER device code is given below:

	Group A	Group B	Group C	Group D	Group E	Group F
00	1-2	1-3	1-3	1-3	2-1	2-4
01	1-2	1-3	4-3	1-3	2-1	2-4
02	1-2	1-3	1-3	4-3	2-1	2-4
03	1-2	1-3	4-3	4-3	2-1	2-4
04	1-2	1-3	1-3	1-3	3-1	2-4
05	1-2	1-3	4-3	1-3	3-1	2-4
06	1-2	1-3	1-3	4-3	3-1	2-4
07	1-2	1-3	4-3	4-3	3-1	2-4
10	1-2	1-3	1-3	1-3	2-1	3-4
11	1-2	1-3	4-3	1-3	2-1	3-4
12	1-2	1-3	1-3	4-3	2-1	3-4
13	1-2	1-3	4-3	4-3	2-1	3-4
14	1-2	1-3	1-3	1-3	3-1	3-4
15	1-2	1-3	4-3	1-3	3-1	3-4
16	1-2	1-3	1-3	4-3	3-1	3-4
17	1-2	1-3	4-3	4-3	3-1	3-4
20	4-2	1-3	1-3	1-3	2-1	2-4
21	4-2	1-3	4-3	1-3	2-1	2-4
22	4-2	1-3	1-3	4-3	2-1	2-4
23	4-2	1-3	4-3	4-3	2-1	2-4
24	4-2	1-3	1-3	1-3	3-1	2-4
25	4-2	1-3	4-3	1-3	3-1	2-4
26	4-2	1-3	1-3	4-3	3-1	2-4
27	4-2	1-3	4-3	4-3	3-1	2-4
30	4-2	1-3	1-3	1-3	2-1	3-4
31	4-2	1-3	4-3	1-3	2-1	3-4
32	4-2	1-3	1-3	4-3	2-1	3-4
33	4-2	1-3	4-3	4-3	2-1	3-4
34	4-2	1-3	1-3	1-3	3-1	3-4
35	4-2	1-3	4-3	1-3	3-1	3-4
36	4-2	1-3	1-3	4-3	3-1	3-4
37	4-2	1-3	4-3	4-3	3-1	3-4
40	1-2	4-3	1-3	1-3	2-1	2-4
41	1-2	4-3	4-3	1-3	2-1	2-4
42	1-2	4-3	1-3	4-3	2-1	2-4
43	1-2	4-3	4-3	4-3	2-1	2-4
44	1-2	4-3	1-3	1-3	3-1	2-4
45	1-2	4-3	4-3	1-3	3-1	2-4
46	1-2	4-3	1-3	4-3	3-1	2-4
47	1-2	4-3	4-3	4-3	3-1	2-4

Continuation of transmitter device code strapping table:

	Group A	Group B	Group C	Group D	Group E	Group F
50	1-2	4-3	1-3	1-3	2-1	3-4
51	1-2	4-3	4-3	1-3	2-1	3-4
52	1-2	4-3	1-3	4-3	2-1	3-4
53	1-2	4-3	4-3	4-3	2-1	3-4
54	1-2	4-3	1-3	1-3	3-1	3-4
55	1-2	4-3	4-3	1-3	3-1	3-4
56	1-2	4-3	1-3	4-3	3-1	3-4
57	1-2	4-3	4-3	4-3	3-1	3-4
60	4-2	4-3	1-3	1-3	2-1	2-4
61	4-2	4-3	4-3	1-3	2-1	2-4
62	4-2	4-3	1-3	4-3	2-1	2-4
63	4-2	4-3	4-3	4-3	2-1	2-4
64	4-2	4-3	1-3	1-3	3-1	2-4
65	4-2	4-3	4-3	1-3	3-1	2-4
66	4-2	4-3	1-3	4-3	3-1	2-4
67	4-2	4-3	4-3	4-3	3-1	2-4
70	4-2	4-3	1-3	1-3	2-1	3-4
71	4-2	4-3	4-3	1-3	2-1	3-4
72	4-2	4-3	1-3	4-3	2-1	3-4
73	4-2	4-3	4-3	4-3	2-1	3-4
74	4-2	4-3	1-3	1-3	3-1	3-4
75	4-2	4-3	4-3	1-3	3-1	3-4
76	4-2	4-3	1-3	4-3	3-1	3-4
77	4-2	4-3	4-3	4-3	3-1	3-4

It will be noted that in many cases two straps are inserted in the same split lug. This is acceptable, but three in the same lug would not be, nor would a diagonal run such as from lug 1 to 4 or from lug 2 to 3. If such runs exist, the strapping has been done incorrectly.

VIII. Speed Selection

A group of split lugs labelled "G" determine the operating speed of each KL8/E, EA, EB etc. option. Another split lug group labelled "H" determines whether the transmitter and receiver sections operate at the same speed. The correct strappings of groups G & H are listed below for each option:

Option	Group G	Group H	Notes
KL8/E	7-8	1-2	M8650 board
KL8/EA	7-8	1-2	M8650 board
KL8/EB	7-8	1-2	M8650 YA board
KL8/EC	5-6	1-2	M8650 YA board
KL8/ED	3-4	1-2	M8650 YA board
KL8/EE	1-2	1-2	M8650 YA board
KL8/EF	7-8	2-3	M8650 YA board
KL8/EG	7-8	H2 to G5	M8650 YA board

IMPORTANT NOTICE: There are no factory machine inserted jumpers in Group G. There must be one and only one of the straps shown in the above table in place in section G for the board to work; said jumper was hand soldered between the split lugs at the time the board left Digital's production facility. Remove that jumper before adding any other Group G jumpers. Group H has a factory machine inserted jumper between H1 and H2. Cut this jumper before adding any other Group H jumper.

IX. Stop Code Selection

Mechanical teleprinters, such as those that operate at 110 baud, require stop bits after each character transmitted so that their mechanisms can coast to a predetermined starting position before handling the next character. The same restriction applies to their receivers. To prevent the KL8/E from sending characters during this stopping interval, a stop bit counter is inserted in the KL8/E transmitter circuitry. This counter permits the KL8/E to request another character from the program as soon as it has send the last information bit of the preceding character, but prohibits it from sending that new character until an appropriate stop bit interval has been counted out following the transmission of the final information bit of the preceding character. This counter is controlled by a split lug group labelled "J".

Group J	Stop Code	Devices Using This Stop Code
1-2	1 bit	Electronic receiver devices operating at 150 baud and above.
2-3	2 bits	Mechanical receiver devices operating at 110 baud.

The KL8/E and KL8/EA contain a machine inserted jumper

DIGITAL EQUIPMENT CORPORATION
MAYNARD, MASSACHUSETTS

PARTS LIST

MADE BY KEN GULICK	CHECKED KEN GULICK	SECTION 1
DATE 4/8/71	DATE 4/8/71	
ENG John C MacNamara	PROD R. H. Olsen	ISSUED SECT. 1
DATE 8-18-71	DATE 8-18-71	

ITEM NO.	DWG NO./PART NO.	DESCRIPTION	QUANTITY/VARIATION KL8-E	KL8-EA	KL8-EB	KL8-EC	KL8-ED	KL8-EE	KL8-EF	KL8-EG
1	D-IA-7008360-0-0	CABLE ASSEMBLY (KL8-E)	1	-	-	-	-	-	-	-
2	E-CS-M865Ø-Ø-1	ASYNC DATA CONTROL	1	1	-	-	-	-	-	-
3	D-IA-BCØ1V-25-Ø	CABLE ASSY (BCØ1V)	-	1	1	1	1	1	1	1
4	E-CS-M865Ø-YA-Ø	ASYNC DATA CONTROL (YA)	-	-	1	1	1	1	1	1

TITLE	ASSY NO.	SIZE	CODE	NUMBER	REV.	ECO NO.
ASYNC DATA CONT	NONE	A	PL	KL8-E-Ø		
	SHEET 1 OF 1	DIST.	G			

DEC FORM NO.16-1031
DBA 110

DIGITAL EQUIPMENT CORPORATION
MAYNARD, MASSACHUSETTS

ACCESSORY LIST

MADE BY J.McCluskey DATE 1/28/72	CHECKED DATE E Clark 1/28/72	SECTION
ENG DATE E Clark 1/28/72	PROD DATE E Clark 1/28/72	ISSUED SECT.

LEGEND

D DOCUMENT
DN DOCUMENT CHANGE NOTICE
FA PAPER TAPE ASCII
PB PAPER TAPE BINARY
PM PAPER TAPE READ-IN-MODE

ITEM NO.	DWG NO. / PART NO.	DESCRIPTION	QUANTITY / VARIATION KL8/E	KL8/A	KL8/EB-G					KIT CHECK BY ____ DATE ____	INSTALLATION CHECK BY ____ DATE ____
1	M8650	KL8/E Control Module	X	X							
2	M8650-YA	KL8/EB-EG Control Module			X						
3	7008360	KL8/E Control Cable	X								
4	BC01-V	KL8/EA-G Control Cable		X	X						
5	Maindec-8/E-D2AC-D	PDP-8E Teltype And KL8 Asynchronous Data Control Test Binary Tape	X	X	X						
6	Maindec-8/E-D2AC-PB	PDP-8E Teltype And KL8 Asynchronous Data Control Test Document	X	X	X						
7	Maindec-00-D2G3-PT	Binary Count Pattern Test Tape	X	X	X						
8	KL8/E-0	KL8/E Print Set	X	X	X						
9	KL8/E	KL8/E Maintenance Manual	X	X	X						
		Note: When Item 9 Is Temporarily Waived Ship Following									
	A-SP-KL8/E-2	Test Procedure	X	X	X				·		
	A-SP-KL8-E-3	Acceptance Proedure	X	X	X						

TITLE	ASSY. NO.	SIZE	CODE	NUMBER	REV.	ECO NO.
ASYNC. DATA CONTROL	SHEET OF	A	AL	KL8-E-4		
		DIST.				

DEC FORM NO.
DRA 121