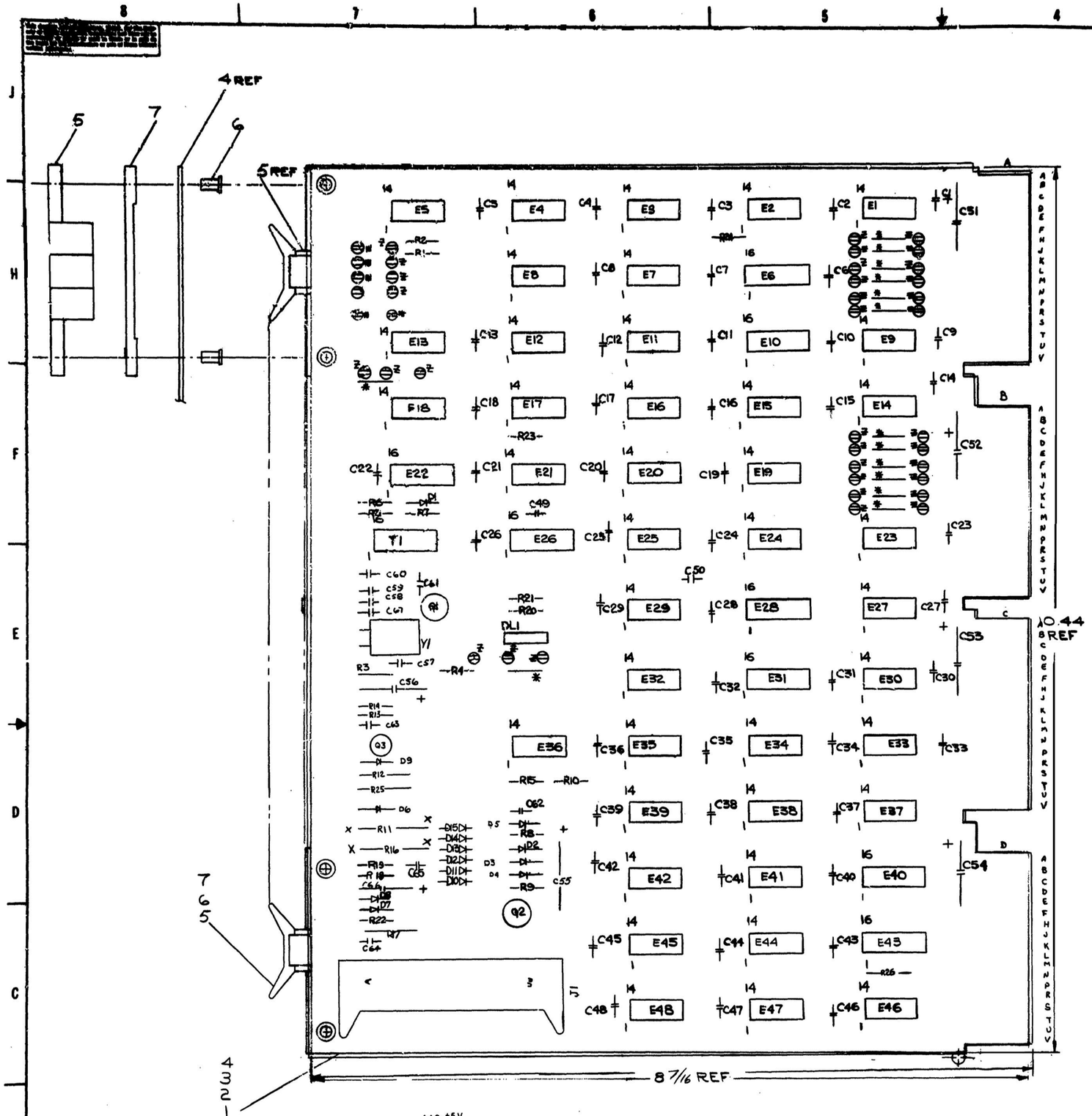

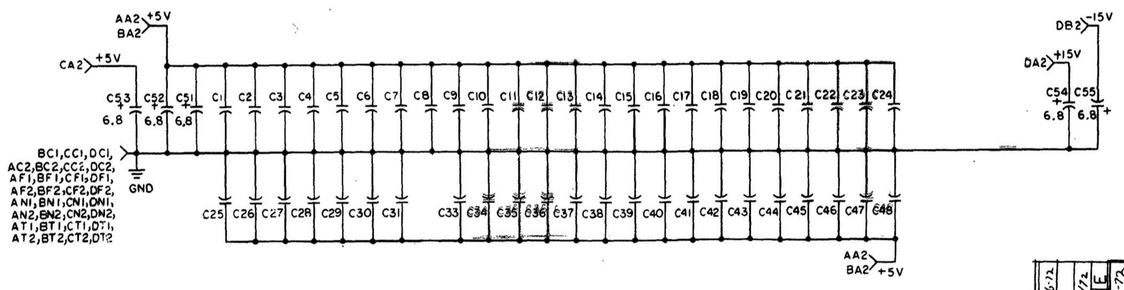

NOTES:

1. SPLIT LUGS
   MACHINE INSERTED JUMPER
   B > : 40 PIN HEADER CONNECTION
   DATA II DV1 : OMNIBUS CONNECTION
2. PIN F IS EIA TRANSMITTED DATA:
   +6V OR MORE = SPACE = Ø
   -6V OR LESS = MARK = 1
   PIN V IS EIA REQUEST TO SEND, +6V OR MORE = ON (PERMANENTLY).
   PIN DD IS EIA DATA TERMINAL READY, +6V OR MORE = ON (PERMANENTLY).
3. THIS DRAWING FOLLOWS DEC STANDARD 056 LOGIC SYMBOLOGY.
   FLIP-FLOPS ARE NAMED FOR THE CONDITION THEY REPRESENT IN THE "1" STATE.
   THE FOLLOWING FIGURES APPLY:

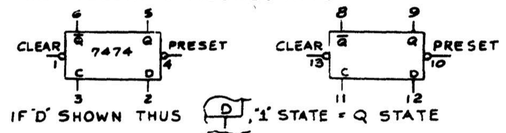

IF "D" SHOWN THUS, "1" STATE = Q STATE
IF "D" SHOWN THUS "1" STATE = $\bar{Q}$ STATE
IF "1" SHOWN THUS THIS LEAD IS HIGH WHEN FLIP-FLOP IS IN "1" STATE.
IF "1" SHOWN THUS THIS LEAD IS LOW WHEN FLIP-FLOP IS IN "1" STATE.

4. WAVEFORM AT TEST POINT #6 FOR RECEPTION OF "A" (ASCII 3Ø1)

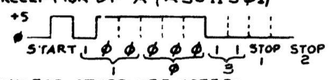

5. UNLESS OTHERWISE NOTED:
   RESISTORS = 1K 1/4W 5%
   CAPACITORS = .01μf 100V 20%
   DIODES = D664

QTY.	REF DESIGNATION	DESCRIPTION	PART NO.	ITEM NO.
2	R12, R25	RES. 1.5K 1/2W 5%	1300394	59
1	R22	RES. 82 1/4W 5%	1301477	58
5	E1, E23, E27, E30, E46	I.C. DEC 5380	1910392	57
4	E2, E15, E33, E37	I.C. DEC 97401	1909973	56
9	E3, E4, E7, E8, E16, E20, E29, E38, E48	I.C. DEC 7474	1905547	55
3	E5, E13, E18	I.C. DEC 7493	1909054	54
5	E6, E10, E26, E28, E31	I.C. DEC 8271	1909615	53
2	E9, E14	I.C. DEC 5314	1910391	52
3	E11, E45, E47	I.C. DEC 7402	1909004	51
3	E12, E41, E44	I.C. DEC 7400	1905575	50
1	E17	I.C. MC1489L EIA RECIEVER	1910323	49
1	E19	I.C. DEC 7410	1905576	48
2	E21, E42	I.C. DEC 7404	1909686	47
1	E22	I.C. DEC 74193	1910018	46
1	E24	I.C. DEC 9815	1909713	45
2	E25, E39	I.C. DEC 7450	1905580	44
1	E32	I.C. MC1488L EIA DRIVER	1910322	43
2	E34, E36	I.C. DEC 5384	1910394	42
2	E40, E43	I.C. DEC 8251	1909594	41
1	E35	I.C. DEC 74H00	1909056	40
52	C1-C50, C62, C64	CAP. .01μf 100V 20% DISC	1001610	39
6	C51-C56	CAP. 6.8μf 35V 20% TANT	1000067	38
2	C57, C61	CAP. .047μf DISC	1009678	37
1	C58	CAP. 33pf MICA	1000009	36
1	C59	CAP. 100pf MICA	1000016	35
1	C60	CAP. 68pf MICA	1000014	34
1	C63	CAP. .001 μf 250V DISC	1000043	33
2	C65, C67	CAP. 10pf 100V 5% MICA	1000006	32
1	C66	CAP. .47μf, 35V TANT	1005965	31
1	D1	DIODE, D662	1100113	30
14	D2-D15	DIODE, D664	1100114	29
3	R1, R4, R20	RES. 220, 1/4W 5%	1300271	28
1	R2	RES. 750, 1/4W 5%	1301401	27
2	R3, R19	RES. 10K, 1/4W 5%	1300479	26
2	R5, R18	RES. 3.3K, 1/4W 5%	1300439	25
4	R6, R7, R13, R24	RES. 470 1/4W, 5%	1300316	24
1	R8	RES. 150 1/4W, 5%	1300250	23
2	R10, R15, R26	RES. 1K, 1/4W, 5%	1300365	22
3	R11, R16	RES. 750 1W 5%	1302385	21
1	R14	RES. 1.5K 1/4W, 5%	1300391	20
1	R21	RES. 330 1/4W 5%	1300295	19
1	R23	RES. 30K, 1/4W 5%	1302394	18
1	R9	RES. 180 1/4W, 5%	1301322	17
1	R17	RES. 560, 1/2W, 5%	1300338	16
1	Q1	TRANSISTOR, DEC 3009B	1503100	15
2	Q2, Q3	TRANSISTOR, DEC 6534D	1503409	14
1	T1	XFMR 8010	1609651	13
1	DL1	DELAY LINE 30 NANO SEC	1605528	12
1	Y1	CRYSTAL 14.418 MHZ.	1809880-01	11
40		LUGS, SPLIT	9006735	10
1		CONNECTOR, 40 PIN	1209941	9
AR		WIRE #22 AWG SOLID BUS	9107560-01	8
4		SPACER (CABLE CLAMP)	1202-04	7
8		EYELET GS4-11 STIMPSON	9006750	6
4		HANDLE FLIP CHIP-MAGENTA	9008337-06	5
1		ETCHED CIRCUIT BOARD	5009546	4
REF		MODULE HISTORY LIST	B-MH-M8650-0-6	3
REF		ASSY/DRILLING HOLE LAYOUT	D-AH-M8650-0-5	2
REF		X-Y COORDINATE HOLE LOC.	K-CO-M8650-0-4	1

PARTS LIST

ETCH BOARD REV D

DEC MC1488L	7	14(+5V)	
8251	8	16	
5384	1	8	
74193	8	16	
5314	1	8	
8271	8	16	
7493	10	5	
DEC 5380	1	8	
IC TYPE	GND	+5V	

GND AND 5V ARE USUALLY PIN 7 AND 14 RESPECTFULLY EXCEPTIONS ARE STATED ABOVE

IC PIN LOCATIONS

ITEM NO	AWG	FROM PT	TO PT
8	22	JJ23-A	JJ23-B
		JH12-A	JH12-B
		JB13-A	JB13-B
		JB12-A	JB12-B
		JA12-A	JA12-B
		JA13-A	JA13-B
		JF24-A	JF24-B
		JF12-A	JF12-B
		JE13-A	JE13-B
		JE24-A	JE24-B
		JD24-A	JD24-B
		JD13-A	JD13-B
		JC24-A	JC24-B
8	22	JC13-A	JC13-B

JUMPER LIST

DEC6534D	MPS6534	
DEC3009B	2N3646	
D664	1N3606	
D662	1N645	
DEC NO.	EIA NO.	DEC NO. EIA NO.

SEMICONDUCTOR CONVERSION CHART

REV.	CHG.	CHANGE NO.	REMARKS
A		ORIGINATED	
B		M8650-00001	
C		M8650-00002	
D		M8650-00003	
E		M8650-00004	

E.CLARK 12-6-72
E.CLARK
J.McNAMARA 6-16-71
E.CLARK 9-4-72
J.McNAMARA 2-28-72
J.McNAMARA 6-1-72
J.McNAMARA 7-14-71

DATE 4/6/71
DATE 7-13-71
DATE 7-13-71
DATE 7-6-71

FIRST USED ON A-ML-KL8-E
SCALE 2/1
SHEET 1 OF 2

EQUIPMENT CORPORATION
MAYNARD, MASSACHUSETTS

TITLE
ASYNCHRONOUS DATA CONTROL

SIZE E CS M8650-0-1 REV. E
DIST. 0.V 100V 0.25
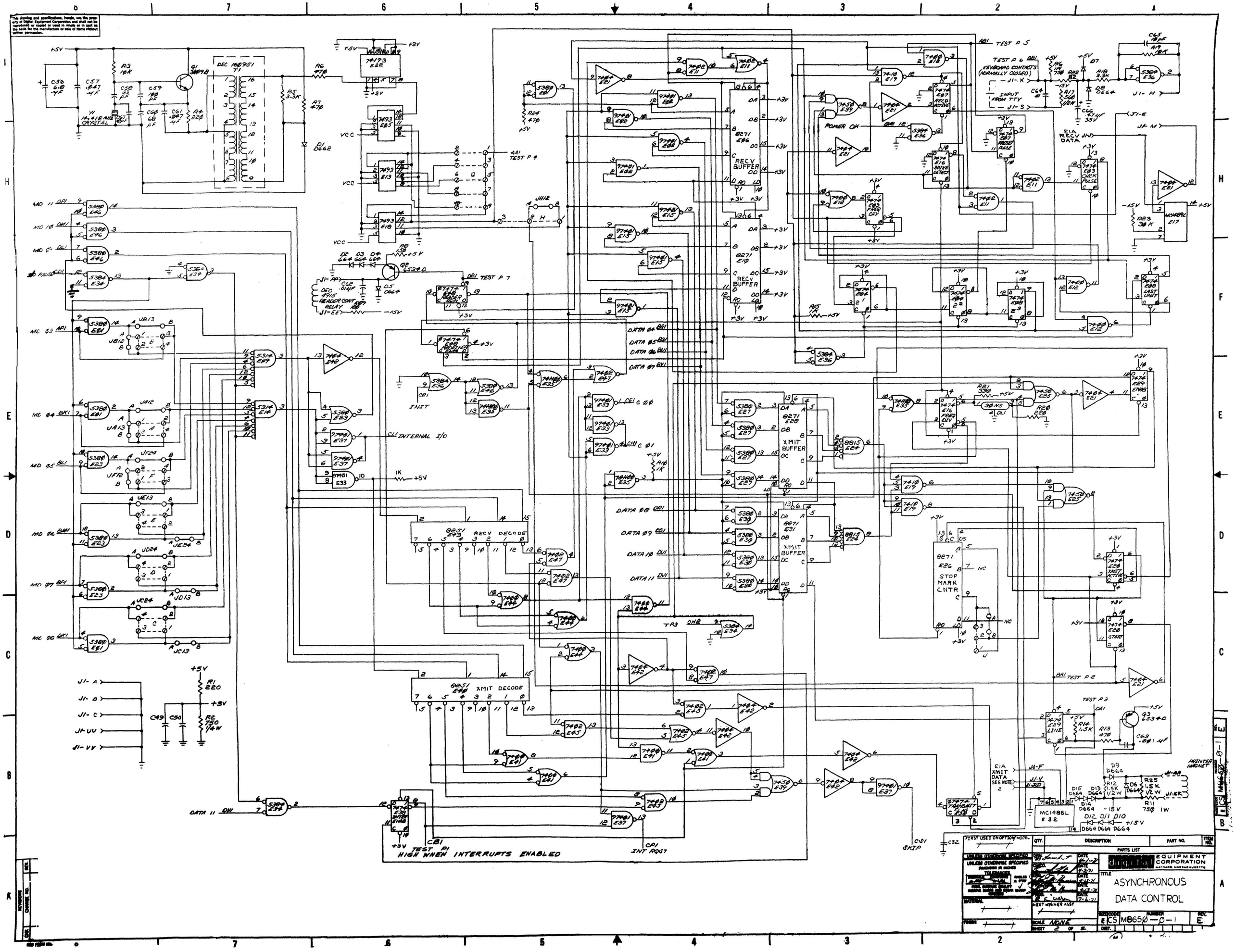
This drawing and specifications, herein, are the property of Digital Equipment Corporation and shall not be reproduced or copied or used in whole or in part as the basis for the manufacture or sale of items without written permission.