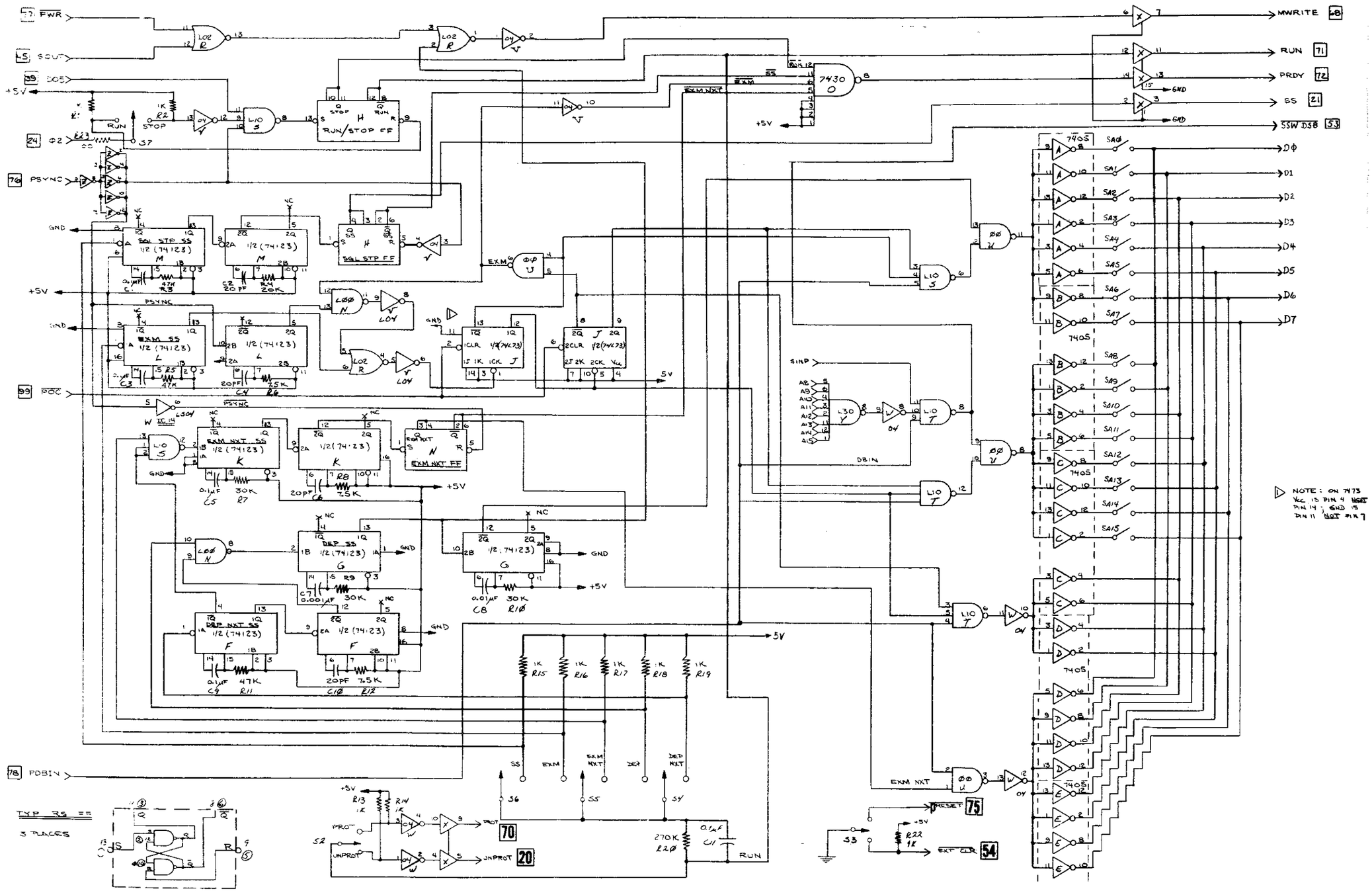880-106
COMPUTER FRONT PANEL CONTROL