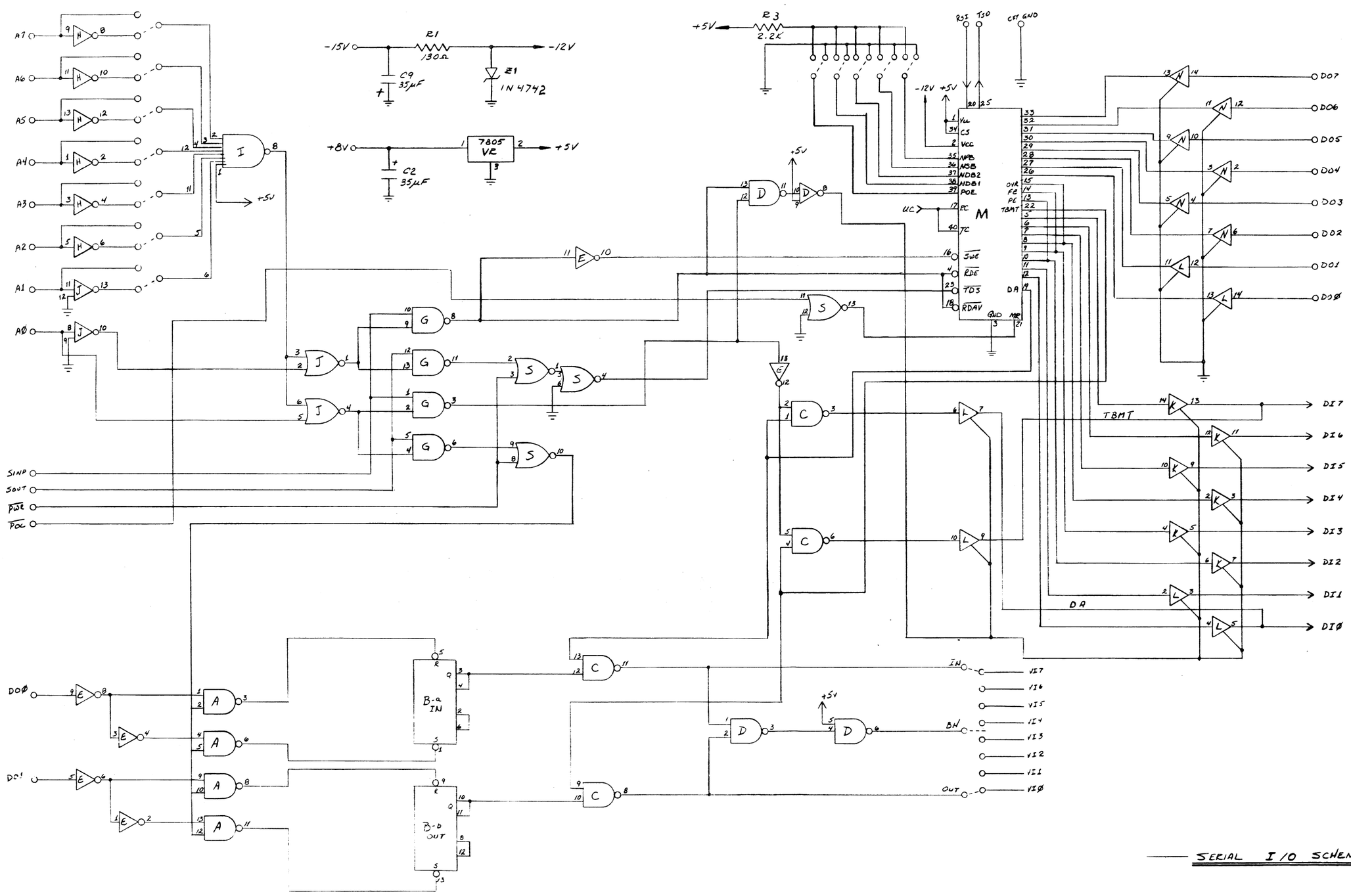

SERIAL I/O SCHEMATIC

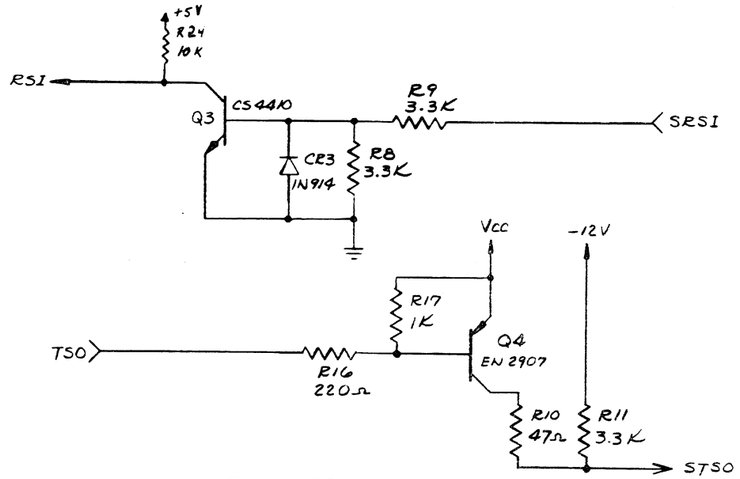

SERIAL RS-232 INTERFACE

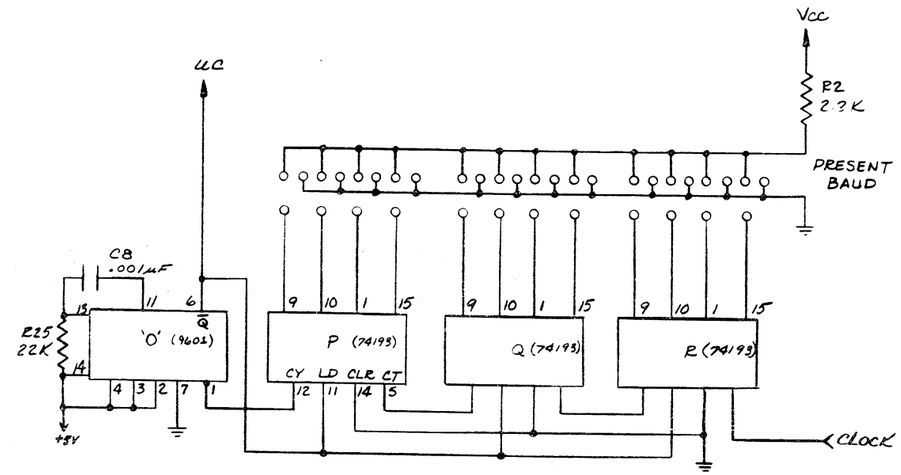

BAUD SELECT CIRCUIT

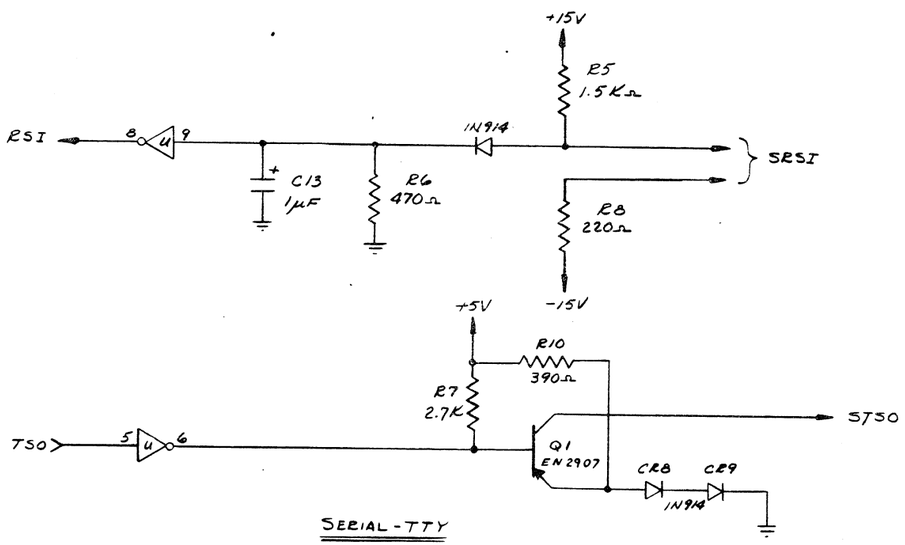

SERIAL-TTY

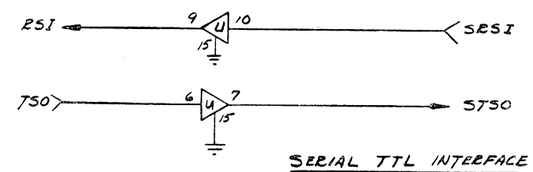

SERIAL TTL INTERFACE