IMS INTERNATIONAL

MODELS 400/430

FLOPPY DISK CONTROLLER BOARDS

****

The Industrial Micro System Model 400 and 430 Floppy Disk Controllers for use with 8" and 5-1/4" Floppy Drive, are described in the following paragraphs.

The 400 and 430 are based on the NEC uPD765 Floppy Disk Controller chip providing Single and Double Density and Single and Double Sided operation. An on-board 8257 provides DMA operation. Either board can control up to four Floppy Disk Drives.

The Model 400 and 430 boards are used in the IMS International Series 8000 and 5000 systems, respectively.

INPUT/OUTPUT PORT ADDRESS RANGE SELECTION

The Model 400 boards are etched for the use of Input/Output ports 80H through 8FH. The Model 430 boards have option shunts set for port addresses C0-CF. This is accomplished at JA near the center of the board. The shunts at JA are as shown in the diagram below:

Shunt A6 Center pin to left pin = 80 Hex
Shunt A6 Center pin to right pin = C0 Hex
401 Standard Address = 80 Hex
431 Standard Address = C0 Hex

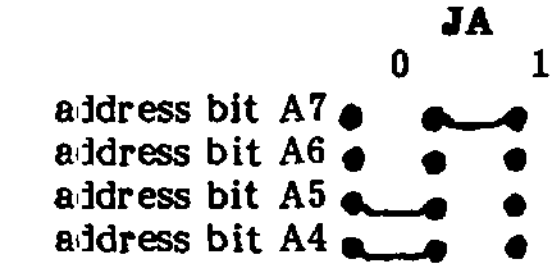

If it is necessary to change the port address for the board, cuts and jumpers in the JA block will be required.

Port Definitions 80 through 8F (C0 through CF for 431)

Ports XO-X8 are used by the 8257 programmable DMA controller on the board. (See the attached write-up on the DMA controller chip for more detail).

80H -	Channel 0	DMA Register		
81H -	Channel 0	Terminal Count Register		
82H -	Channel 1	DMA Register		
83H -	Channel 1	Terminal Count Register		
84H -	Channel 2	DMA Register	}	will be reserved for
85H -	Channel 2	Terminal Count Register	}	hard disk controller
86H -	Channel 3	DMA Register	}	will be reserved for
87H -	Channel 3	Terminal Count Register	}	2nd hard disk controller

88H - DMA Status and Commands
89H - NOT USED
IN 8AH - NOT USED

OUT 8AH - Drive select port. Data bits 0 and 1 binary weighted select one of four disk drives. All subsequent status and commands will pertain to the selected drive. These bits are latched on the board.

IN 8BH - NOT USED

OUT 8BH - Precisely the same significance as OUT 8AH described above.

IN 8CH - Board status port. This port provides status information on the drive select, 765 interrupt and drive select delay functions as follows:

DATA BIT 0 - A logical one indicates that a 765 interrupt has occurred.

DATA BIT 1 & 2 - Binary weighted to provide the information on the drive 1,2, or 3 is selected.

DATA BITS 3-6 - NOT USED>

DATA BIT 7 - A logical one indicates that the floppy disk drive motors are on and the motor-control time-out is complete. If the motors are off, or the time-out is not complete, this bit will be zero. Reading this port will start the motors and reset the thirty (30) second motor-off time-out to zero. After approximately one second this delay complete bit will be set to a logical one.

OUT 8CH - Board interrupt mask. The data bits will provide information as follows:

DATA BIT 0 - A one in this position will enable a 765 interrupt on the selected vectored interrupt line. A zero disables the interrupt.

DATA BIT 1 - A one in this position enables a delay complete interrupt on the selected vectored interrupt line. Both bit 0 and 1 are latched on the board.

DATA BITS 2-7 - NOT USED

IN 8DH &
OUT 8DH - Precisely the same significance as IN 8CH and OUT 8CH as described above.

IN 8E - Read main status register of 765 floppy disk controller. A bit set = 1 is interpreted as follows:

D0 Drive 0 is busy doing seek operation
D1 Drive 1 is busy doing seek operation
D2 Drive 2 is busy doing seek operation
D3 Drive 3 is busy doing seek operation
D4 Floppy disk controller is busy processing a read or write command
D5 Set during the execution phase of non DMA operation only
D6 Set if data transfer is to be from data register to processor

D7 Set if data register is ready to send or receive data to or from processor

IN 8F - Read disk data from data register in 765 F.D.C.
OUT 8F - Write data for disk into data register on 765 F.D.C.

VECTORED INTERRUPT JUMPER

The JB area consisting of eight shunt positions (located in the lower left hand portion of the board) is used to select one of the eight Vectored Interrupt levels to be triggered when a Floppy Disk Controller Interrupt or a Delay Complete Interrupt occur depending upon the status of the Interrupt Mask Port (OUT 8CH).

WRITE PRE-COMPENSATION JUMPERS (MODEL 400 ONLY)

The JC shunt block in the upper left hand corner of the Model 400 board is used to select the amount of write pre-comp employed. Two shunts are utilized with pre-comp selection as shown below:

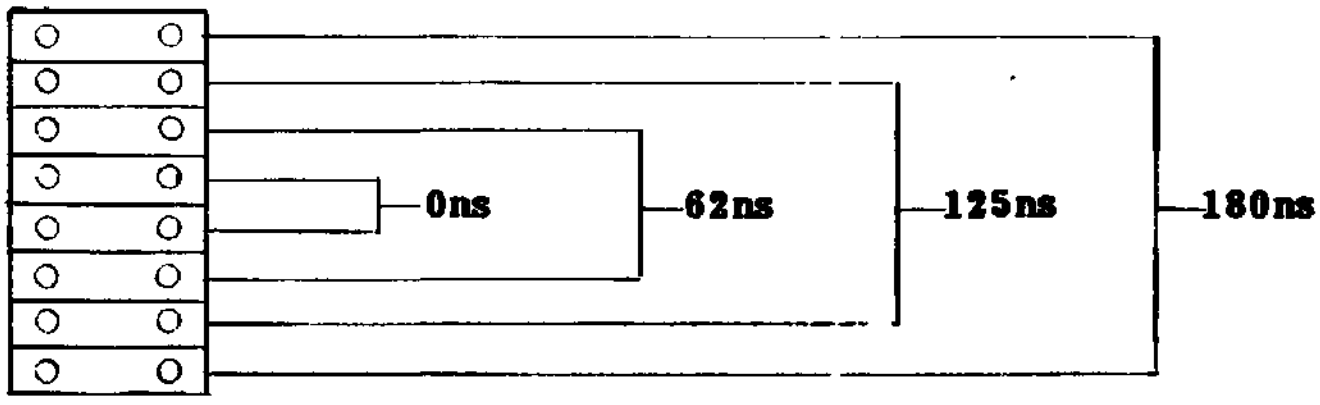

The standard selection is 125 nanoseconds for operation with Shugart floppy disk drives and 180 nanoseconds for Qume drives.

DOUBLE SIDED DRIVE SELECTION SHUNT (MODEL 430 ONLY)

The JC shunt position in the bottom center portion of the 430 board is used to select Single Sided (no shunt) or Double Sided (shunt installed) operation.

Single Sided/Double Sided operation is selected through a drive signal in the 50-pin cable on the Model 400 board.

MOTOR CONTROL SHUNT (MODEL 400 ONLY)

The JD shunt located in the upper right hand corner of the 400 board pertains to the Disk Drive Motor Control. With a shunt installed the Motor Control Option is disabled, and with no shunt Motor Control is enabled. Thus when the shunt is on JD, the Delay Complete Bit (DB7, IN 8CH) is always TRUE.

RIBBON CABLE PIN ASSIGNMENTS

The ribbon cable pin assignments for the Model 400 and Model 430 (J1 connector) are Shugart compatible as listed below:

PIN	MODEL 400 (50 PIN)	MODEL 430 (34 PIN)
2	LOWCUR	SPARE
4	-	IN USE
6	-	SEL 4
8	-	INDX
10	2SIDE	SEL 1
12	DSCHG	SEL 2
14	SDE1	SEL 3
16	-	MON
18	HDLOAD	IN
20	INDX	STP
22	RDY	WDAT
24	-	WGAT
26	SEL 1	TRACK0
28	SEL 2	WPROT
30	SEL 3	RDATA
32	SEL 4	SDE1
34	IN	SEPDAT
36	STP	-
38	WDAT	-
40	WGAT	-
42	TRACK0	-
44	WPROT	-
46	RDATA	-
48	-	-
50	-	-
ALL ODD	GROUND	GROUND

MOTOR CONTROL RELAY (MODEL 400 ONLY)

The connector at J3 in the upper left hand corner of the Model 400 board is to provide control to the solid-state relay used for the Motor Control Option.

REV	DESC. OF CHANGE	ECO NO.	DATE	BY
C	DELETED "2B" FROM SHT. 4 ADDED "2B" TO SHT 2	ECO10002 & ECO10002A	081481	
B	FINAL RELEASE	10002	072981	

P1

AO+ 79
1+ 80
2+ 81
3+ 82
4+ 83
5+ 29
6+ 82
A 7+ 83
AEN+

70 — 8304

BA D+
1+
2+
3+
4+
5+
6+
BA 7+

6B — 1393

CTLSTA-
CTLSTB-
FDCCS-

4D — 00

3C — 04

DMACS-

7B — 85

JA

+5V

5C — 32

SØUT+
SNIP+

9D — 8304

DØ 0+ 36
1+ 35
2+ 88
3+ 89
4+ 38
5+ 34
6+ 40
DØ 7+ 90

9B — 02

FDDACK-
IØRD-
SØUT+

10D — 8304

DI 0+ 95
1+ 94
2+ 41
3+ 42
4+ 91
5+ 92
6+ 93
DI 7+ 43

10B — 14

FDMRD+

9B — 02

DMACS-
BDBIN-

8D — 373

A 8+ 84
9+ 34
10+ 37
11+ 87
12+ 33
13+ 85
14+ 86
A 15+ 32
AEN-
ADSTB+

DB 0+
1+
2+
3+
4+
5+
6+
DB 7+

RST-

12D — 555

+5V
R17 4.7K
R18 100K
C25 4.7 10V
C24 .01

10B — 14

12C — 161

12B — 74

STØP+
STØP-
1HZ+

START-

INDUSTRIAL MICRO SYSTEMS

SCALE	APPROVED BY: D.A Lenk	DRAWN BY
DATE 8-10-79		REVISED

S5000 FLOPPY CONTROL

L-A00431

DRAWING NUMBER 1 OF 6

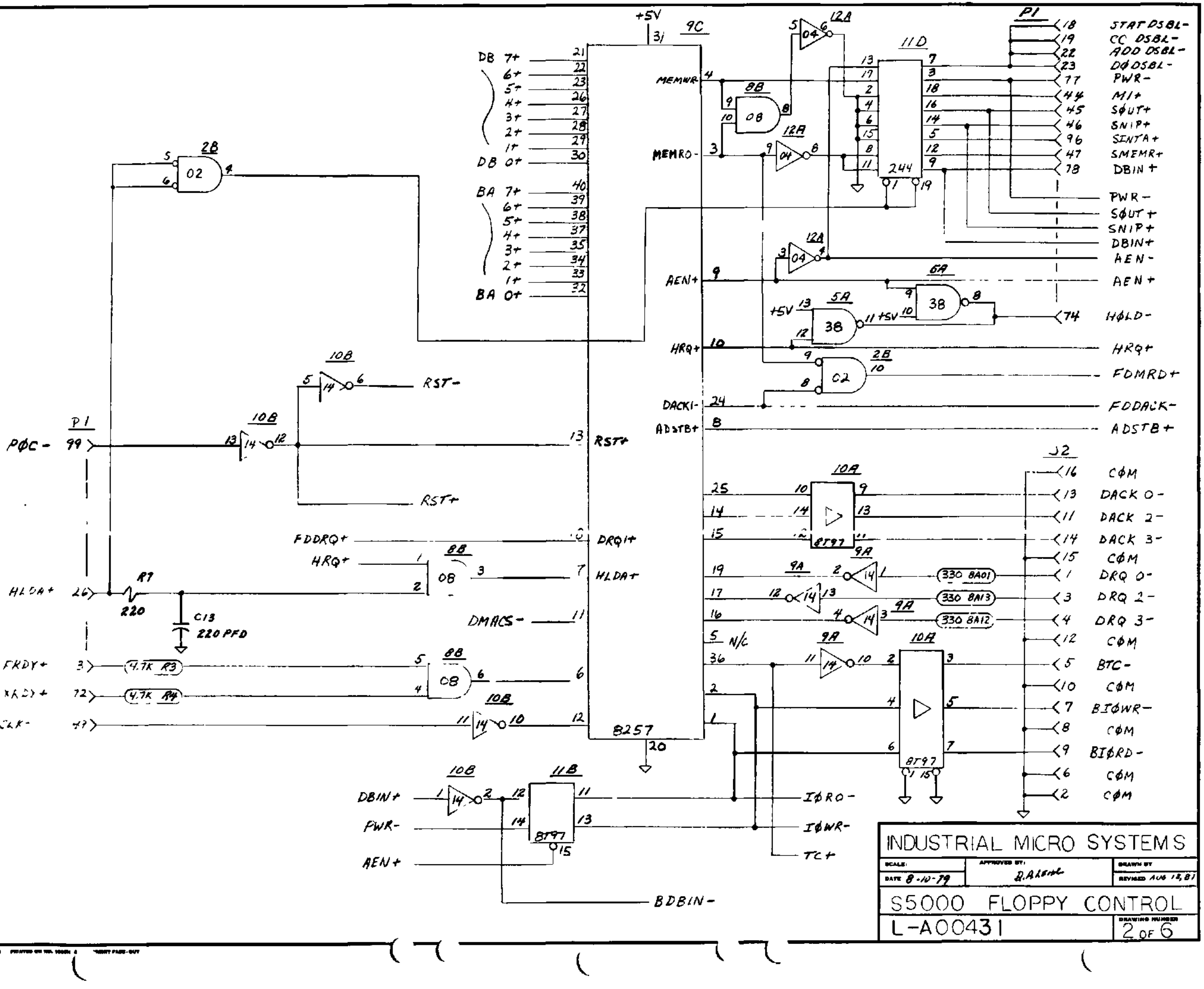

INDUSTRIAL MICRO SYSTEMS

SCALE:	APPROVED BY:	DRAWN BY
DATE 8-10-79	D.A. Leibl	REVISED AUG 13, 81

S5000 FLOPPY CONTROL

L-A00431

DRAWING NUMBER 2 OF 6

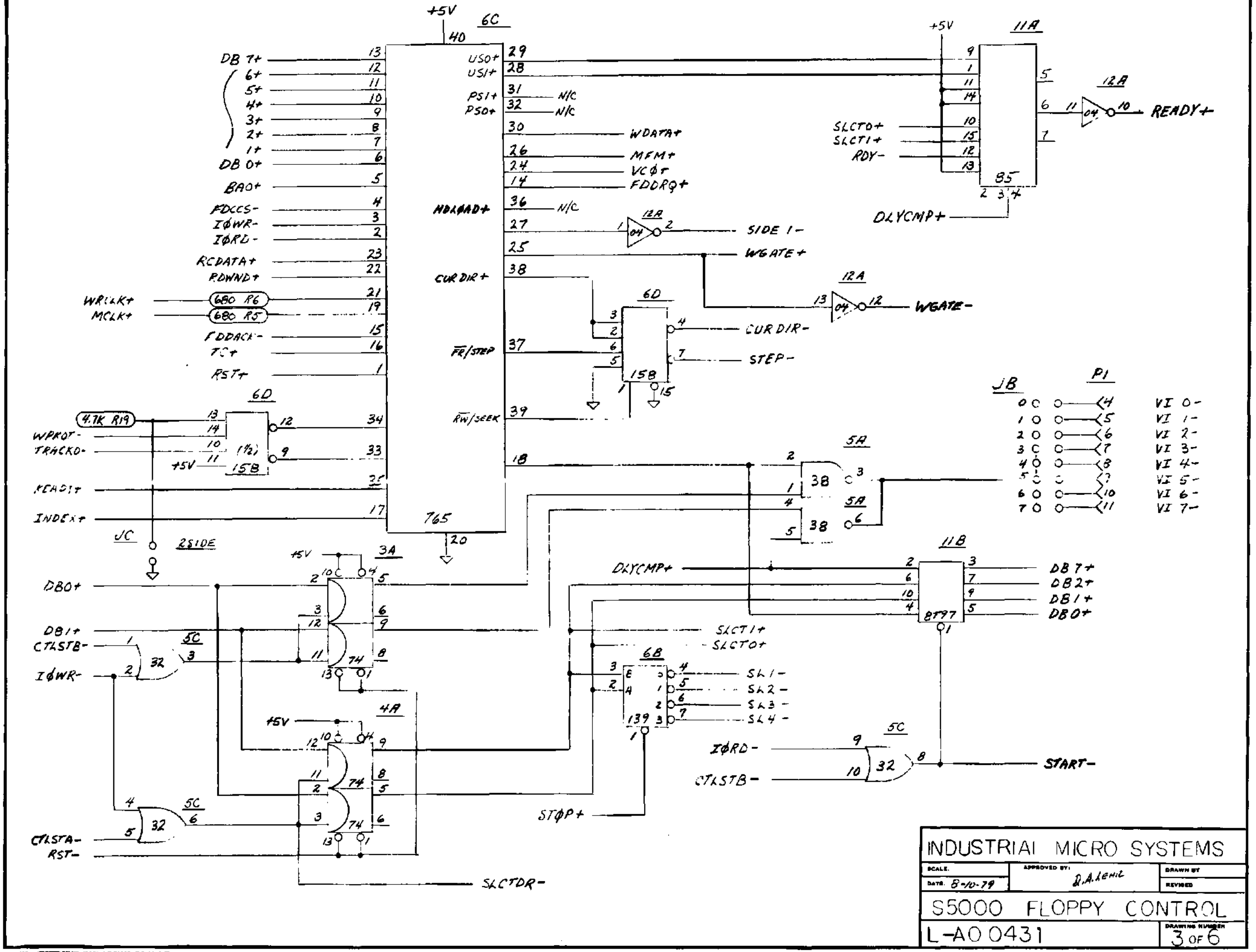

INDUSTRIAL MICRO SYSTEMS

SCALE	APPROVED BY:	DRAWN BY
DATE 8-10-79	D.A. LEHIL	REVISED

S5000 FLOPPY CONTROL

L-A0 0431

DRAWING NUMBER 3 OF 6

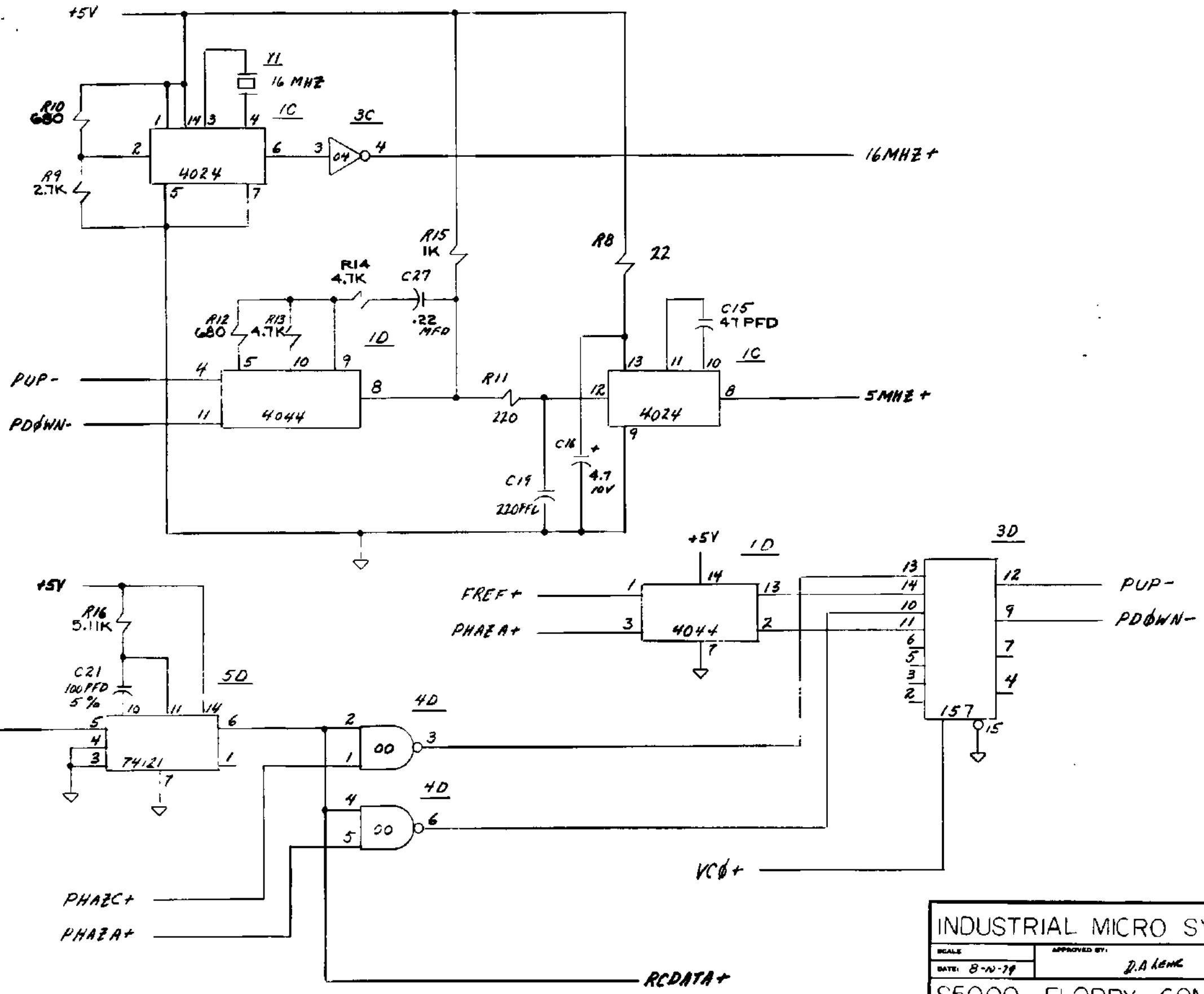

INDUSTRIAL MICRO SYSTEMS		
SCALE	APPROVED BY: D.A LEMKE	DRAWN BY
DATE: 8-N-79		REVISED
S5000 FLOPPY CONTROL		
L-A00431		DRAWING NUMBER 4 OF 6

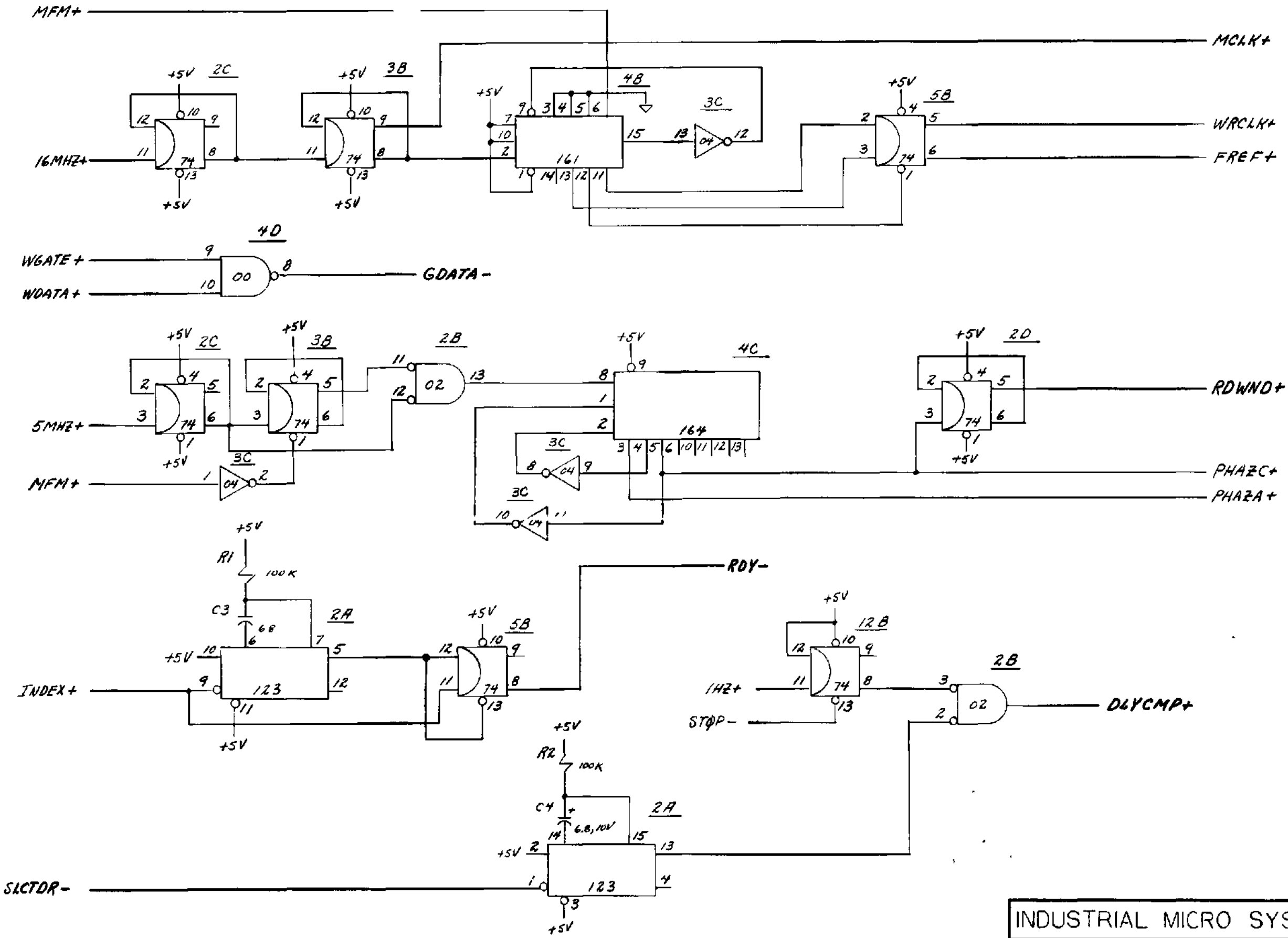

INDUSTRIAL MICRO SYSTEMS	
DATE 8-10-79	APPROVED BY: D A Lowe
S5000 FLOPPY CONTROL	
L-A00431	DRAWING NUMBER 5 OF 6

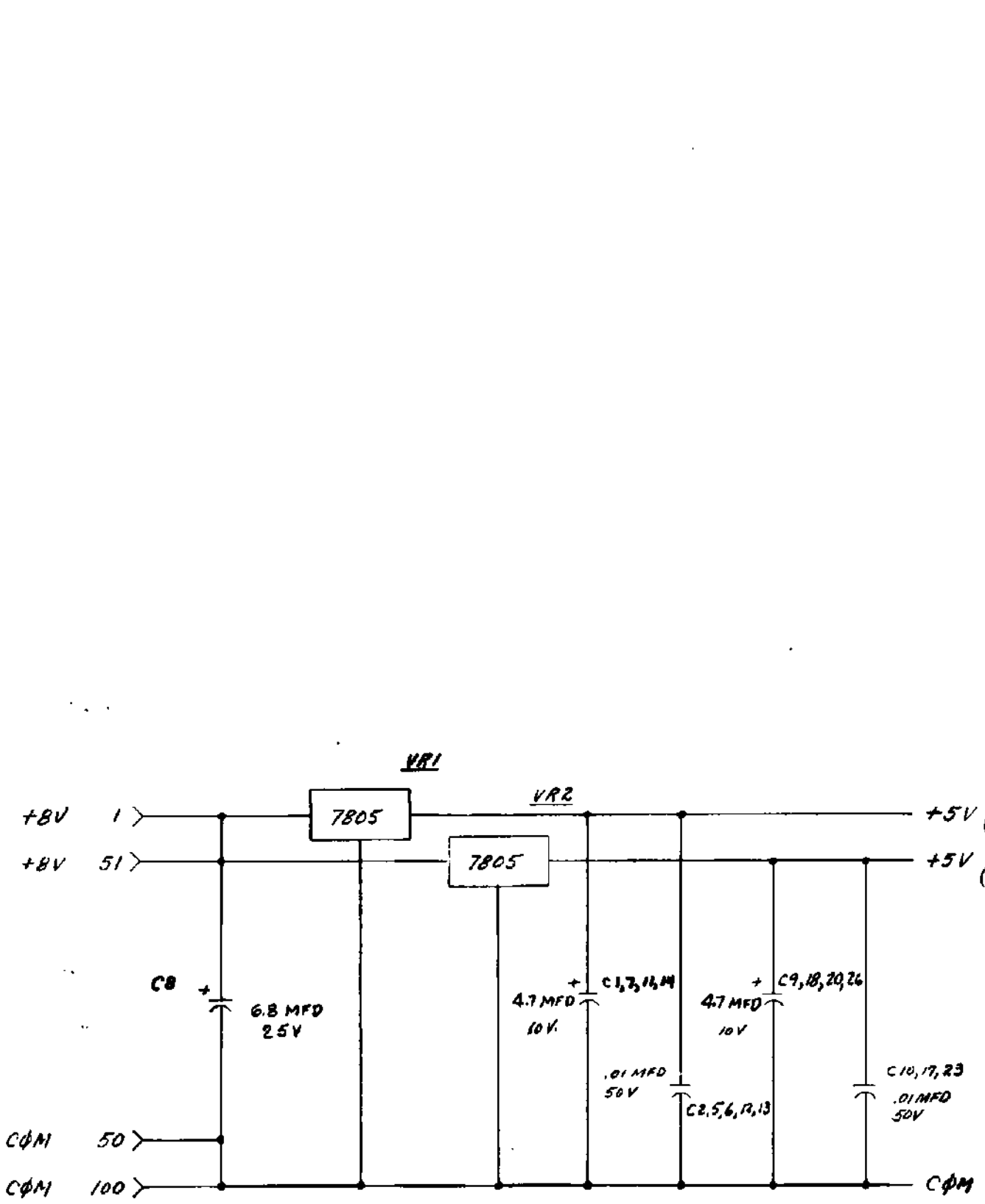

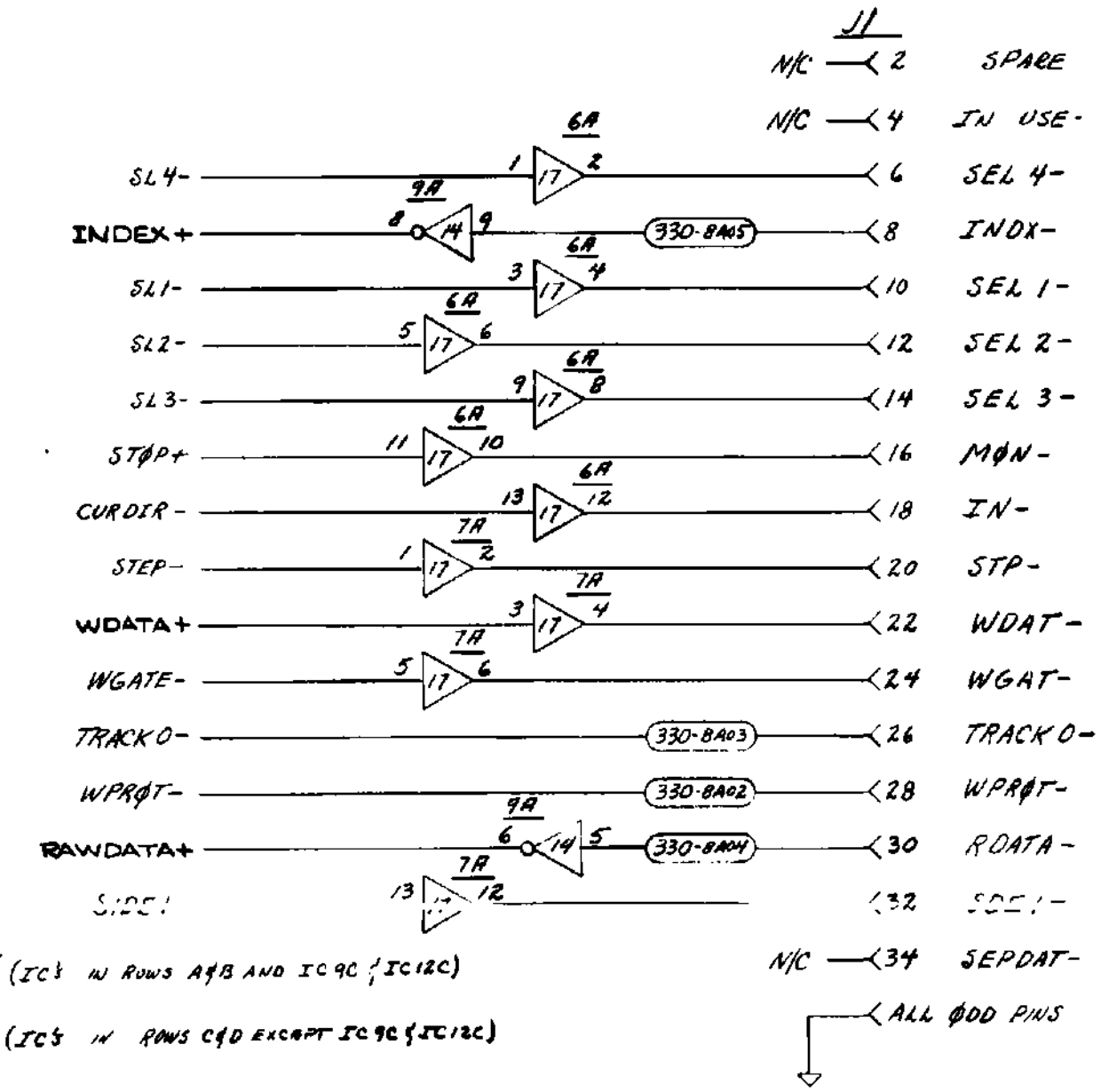

INDUSTRIAL MICRO SYSTEMS		
SCALE:	APPROVED BY: D.A.L.	DRAWN BY DAL
DATE: 8-10-79		REVISED
S5000 FLOPPY CONTROL		
L-A00431		DRAWING NUMBER 6 OF 6

INDUSTRIAL MICRO SYSTEMS, INC.

MODELS 400/430

FLOPPY DISK CONTROLLER BOARDS

****

The Industrial Micro System Model 400 and 430 Floppy Disk Controllers for use with 8" and 5-1/4" Floppy Drive, are described in the following paragraphs.

The 400 and 430 are based on the NEC uPD765 Floppy Disk Controller chip providing Single and Double Density and Single and Double Sided operatin. An on-board 8257 provides DMA operation. Either board can control up to four Floppy Disk Drives.

The Model 400 and 430 boards are used in the Industrial Micro Systems Series 8000 and 5000 systems, respectively.

INPUT/OUTPUT PORT ADDRESS RANGE SELECTION

The Model 400/430 boards are etched for the use of Input/Output ports 80H through 8FH. This is accomplished at JA near the center of the board. The twelve termination points of JA are as shown in the diagram below:

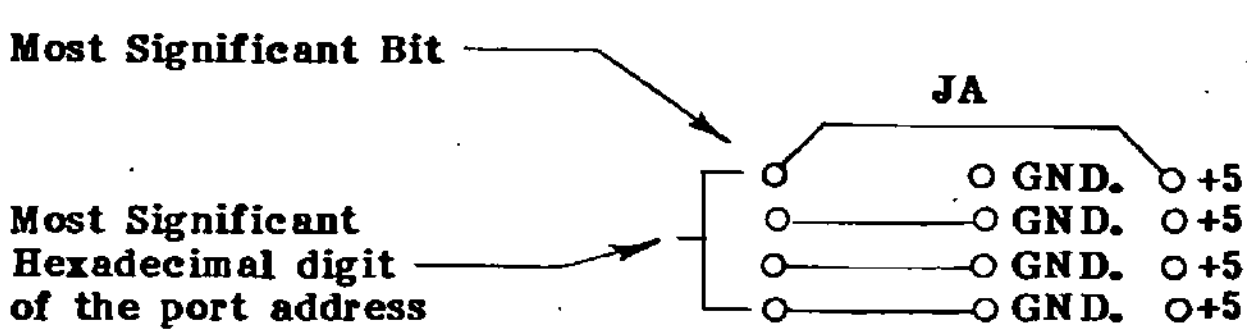

If it is necessary to change the port address for the board, cuts and jumpers in the JA block will be required.

80H through 88H - These ports are used by the 8257 programmable DMA controller on the board. (See the attached write-up on the DMA controller chip for more detail).

80H -	Channel 0	DMA Register
81H -	Channel 0	Terminal Count Register
82H -	Channel 1	DMA Register
83H -	Channel 1	Terminal Count Register

	84H -	Channel 2 DMA Register	) will be reserved for
	85H -	Channel 2 Terminal Count Register	) hard disk controller
	86H -	Channel 3 DMA Register	) will be reserved for
	87H -	Channel 3 Terminal Count Register	) 2nd hard disk controller
	88H -	DMA Status and Commands	
	89H -	NOT USED	
IN	8AH -	NOT USED	

OUT 8AH - Drive select port. Data bits 0 and 1 binary weighted select one of four disk drives. All subsequent status and commands will pertain to the selected drive. These bits are latched on the board.

IN 8BH - NOT USED

OUT 8BH - Precisely the same significance as OUT 8AH described above.

IN 8CH - Board status port. This port provides status information on the drive select, 765 interrupt and drive select delay functions as follows:

DATA BIT 0 - A logical one indicates that a 765 interrupt has occurred.

DATA BIT 1 & 2 - Binary weighted to provide the infiormation on the drive 1,2, or 3 is selected.

DATA BITS 3-6 - NOT USED>

DATA BIT 7 - A logical one indicates that the floppy disk drive motors are on and the motor-control time-out is complete. If the motors are off, or the time-out is not complete, this bit will be zero. Reading this port will start the motors and reset the thirty (30) second motor-off time-out to zero. After approximately one second this delay complete bit will be set to a logical one.

OUT 8CH - Board interrupt mask. The data bits will provide information as follows:

DATA BIT 0 - A one in this position will enable a 765 interrupt on the selected vectored interrupt line. A zero disables the interrupt.

DATA BIT 1 - A one in this position enables a delay complete interrupt on the selected vectored interrupt line. Both bit 0 and 1 are latched on the board.

DATA BITS 2-7 - NOT USED

IN 8DH &
OUT 8DH - Precisely the same significance as IN 8CH and OUT 8CH as described above.

8EH &
8FH - These ports are utilized by the 765 Floppy Disk Controller chip as follows. (See attached write-up on the Floppy Controller chip for more detail).

8EH - Floppy Disk Controller main status register.

8FH - Disk data register.

VECTORED INTERRUPT JUMPER

The JB area consisting of eight shunt positions (located in the lower left hand portion of the board) is used to select one of the eight Vectored Interrupt levels to be triggered when a Floppy Disk Controller Interrupt or a Delay Complete Interrupt occur depending upon the status of the Interrupt Mask Port (OUT 8CH).

WRITE PRE-COMPENSATION JUMPERS (MODEL 400 ONLY)

The JC shunt block in the upper left hand corner of the Model 400 board is used to select the amount of write pre-comp employed. Two shunts are utilized with pre-comp selection as shown below:

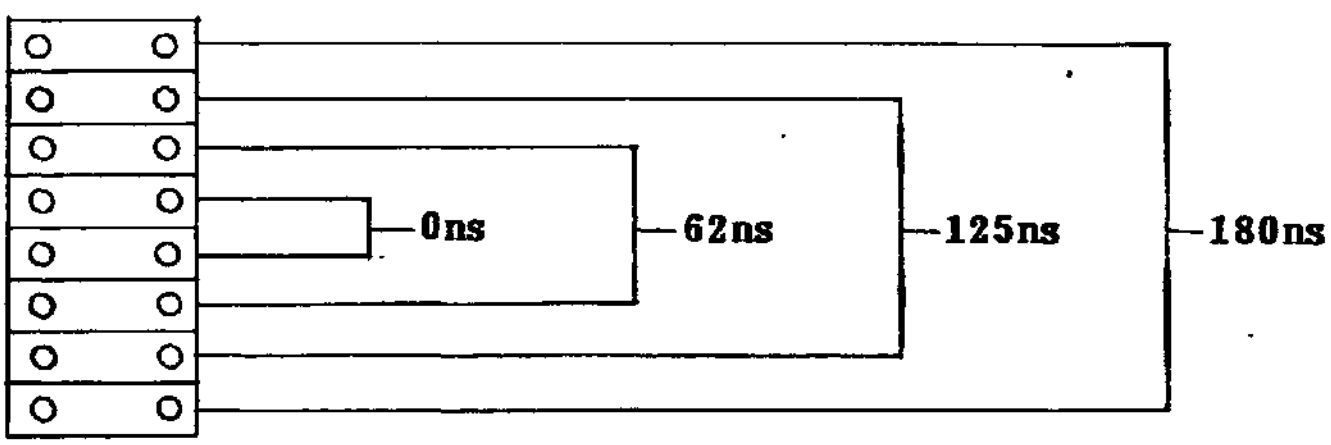

The standard selection is 125 nanoseconds for operation with Shugart or Remex Floppy Disk Drives.

DOUBLE SIDED DRIVE SELECTION SHUNT (MODEL 430 ONLY)

The JC shunt position in the bottom center portion of the 430 board is used to select Single Sided (no shunt) or Double Sided (shunt installed) operation.

Single Sided/Double Sided operation is selected through a drive signal in the 50-pin cable on the Model 400 board.

MOTOR CONTROL SHUNT (MODEL 400 ONLY)

The JD shunt located in the upper right hand corner of the 400 board pertains to the Disk Drive Motor Control. With a shunt installed the Motor Control Option is disabled, and with no shunt Motor Control is enabled. Thus when the shunt is on JD, the Delay Complete Bit (DB7, IN 8CH) is always TRUE.

RIBBON CABLE PIN ASSIGNMENTS

The ribbon cable pin assignments for the Model 400 and Model 430 (J1 connector) are Shugart compatible as listed below:

PIN	MODEL 400 (50 PIN)	MODEL 430 (34 PIN)
2	LOWCUR	SPARE ← wird nicht verwendet
4	-	IN USE
6	-	SEL 4
8	-	INDX
10	2SIDE	SEL 1
12	DSCHG	SEL 2
14	SDE1	SEL 3
16	-	MON
18	HDLOAD	IN
20	INDX	STP
22	RDY	WDAT
24	-	WGAT
26	SEL 1	TRACK0
28	SEL 2	WPROT
30	SEL 3	RDATA
32	SEL 4	SDE1
34	IN	SEPDAT ← wird nicht verwendet
36	STP	-
38	WDAT	-
40	WGAT	-
42	TRACK0	-
44	WPROT	-
46	RDATA	-
48	-	-
50	-	-
ALL ODD	GROUND	GROUND

MOTOR CONTROL RELAY (MODEL 400 ONLY)

The connector at J3 in the upper left hand corner of the Model 400 board is to provide control to the solid-state relay used for the Motor Control Option.

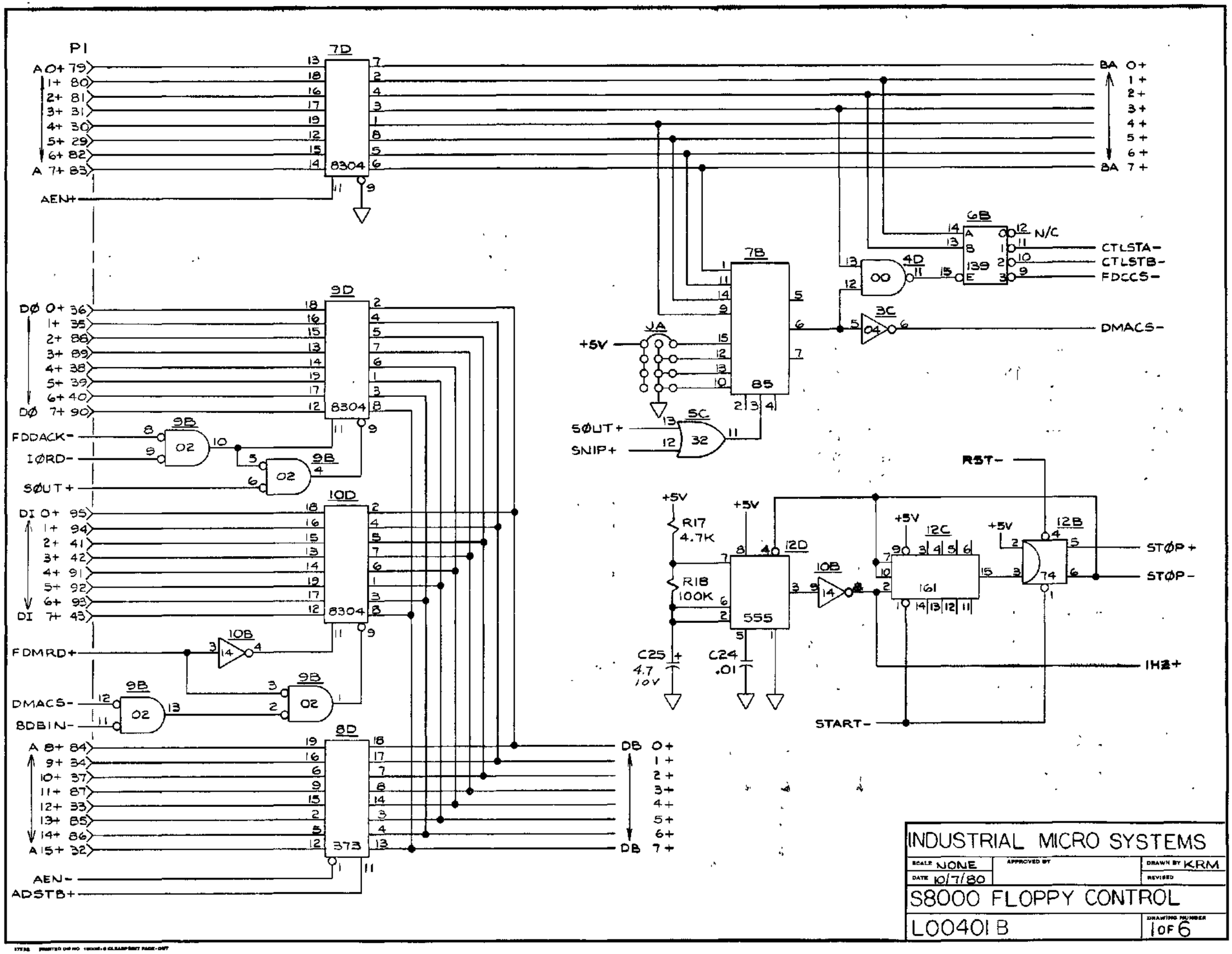

INDUSTRIAL MICRO SYSTEMS		
SCALE NONE	APPROVED BY	DRAWN BY KRM
DATE 10/7/80		REVISED
S8000 FLOPPY CONTROL		
L00401 B		DRAWING NUMBER 1 OF 6

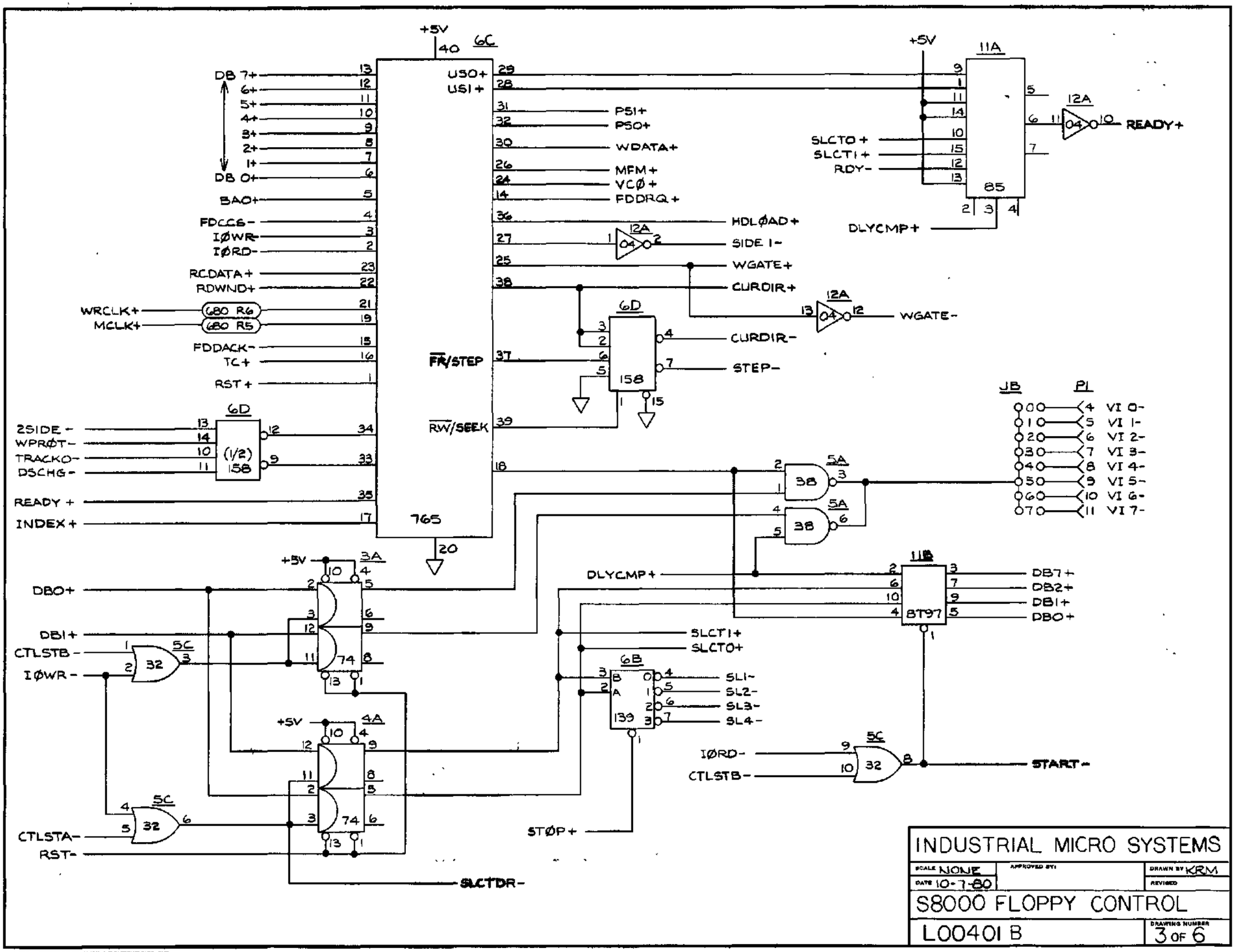

INDUSTRIAL MICRO SYSTEMS

SCALE NONE	APPROVED BY:	DRAWN BY KRM
DATE 10-7-80		REVISED

S8000 FLOPPY CONTROL

L00401 B

DRAWING NUMBER 3 OF 6

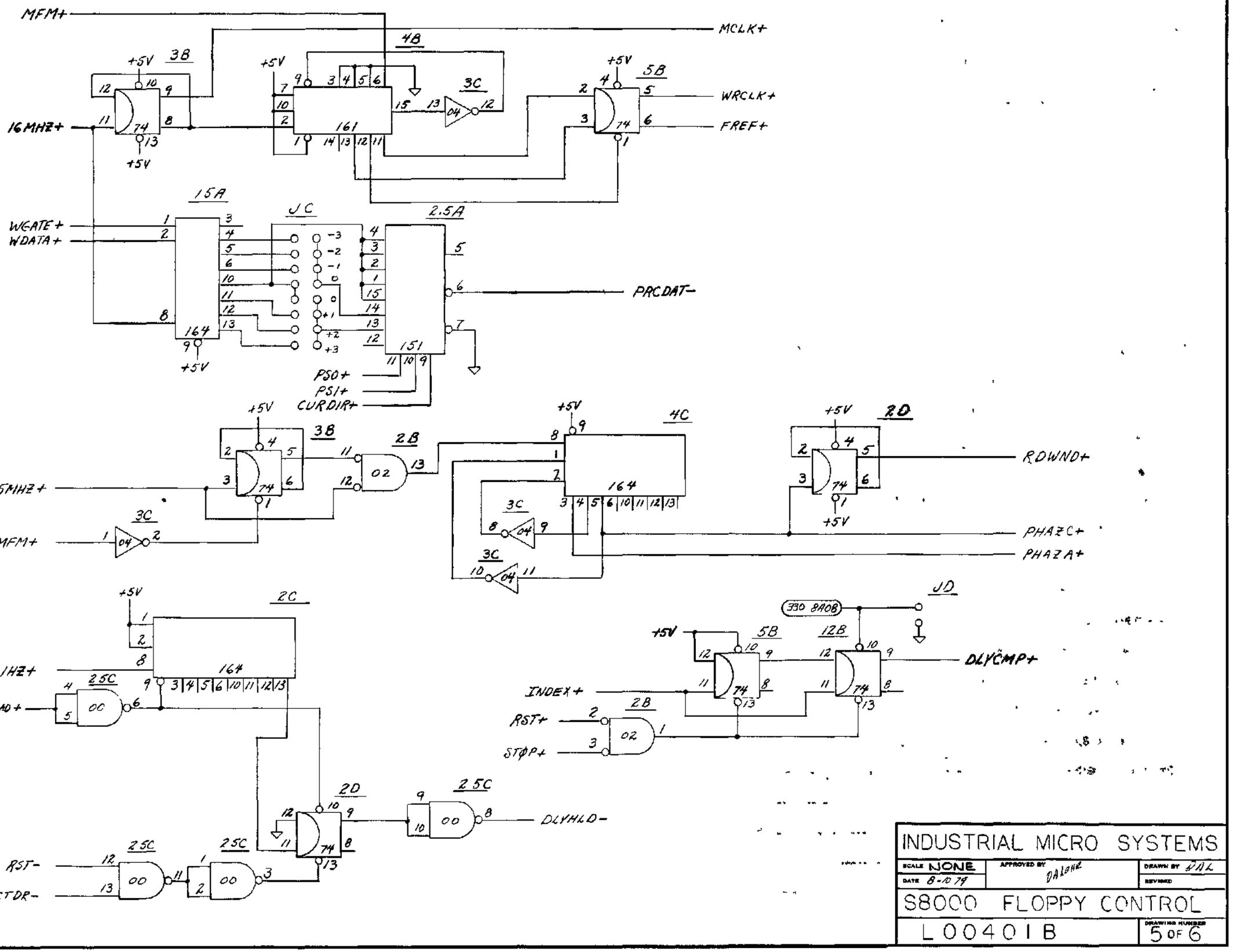

INDUSTRIAL MICRO SYSTEMS

SCALE NONE	APPROVED BY DALBHE	DRAWN BY DAL
DATE 8-10 79		REVISED

S8000 FLOPPY CONTROL

L00401B

DRAWING NUMBER 5 OF 6

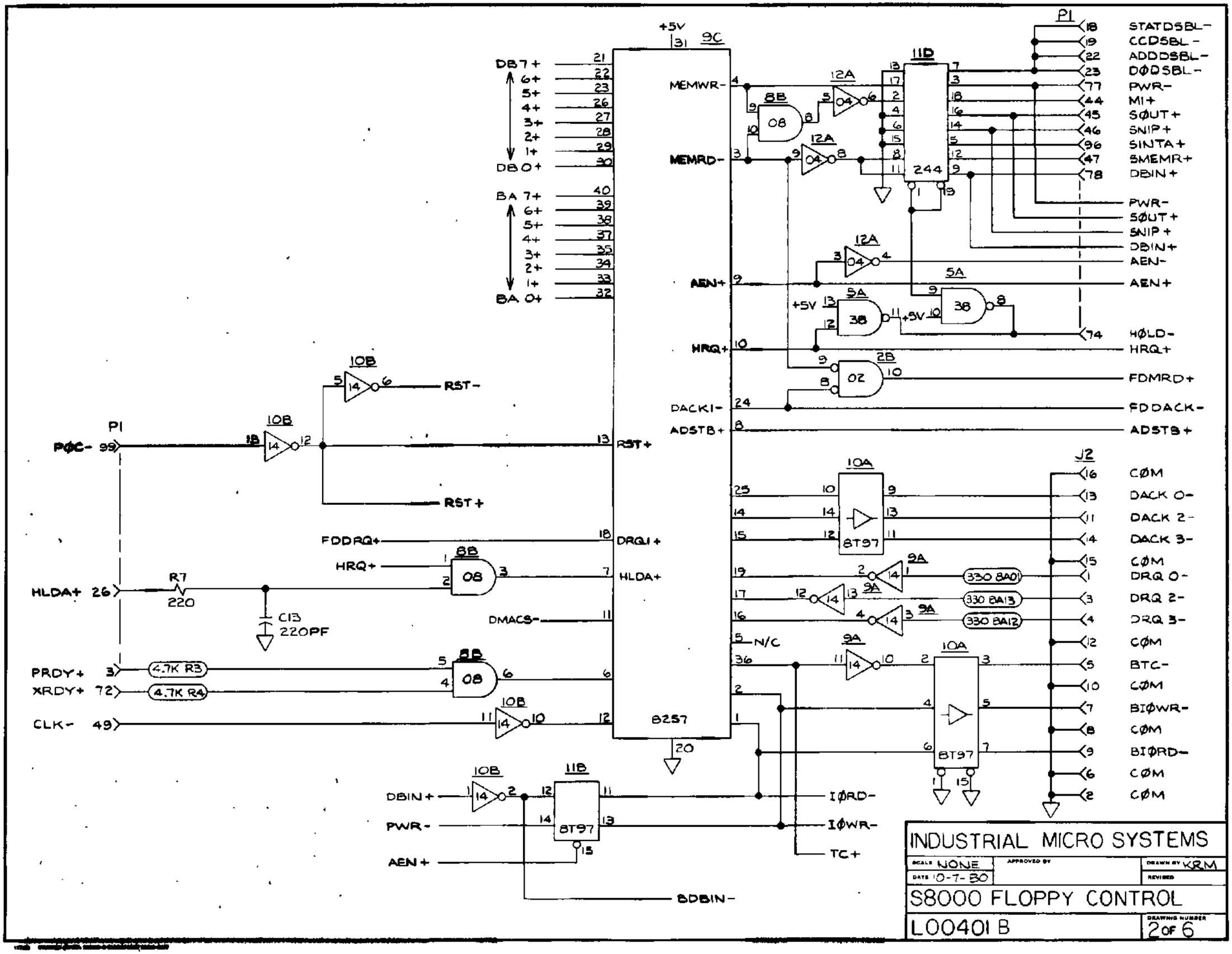

P1
STATDSBL-
CCDSBL-
ADDDSBL-
DØDSBL-
PWR-
MI+
SØUT+
SNIP+
SINTA+
SMEMR+
DBIN+
PWR-
SØUT+
SNIP+
DBIN+
AEN-
AEN+
HØLD-
HRQ+
FDMRD+
FDDACK-
ADSTB+
J2
CØM
DACK 0-
DACK 2-
DACK 3-
CØM
DRQ 0-
DRQ 2-
DRQ 3-
CØM
BTC-
CØM
BIØWR-
CØM
BIØRD-
CØM
CØM
+5V
9C
8257
DB7+
6+
5+
4+
3+
2+
1+
DB0+
BA 7+
6+
5+
4+
3+
2+
1+
BA 0+
MEMWR-
MEMRD-
AEN+
HRQ+
DACK1-
ADSTB+
RST+
DRQ1+
HLDA+
DMACS-
N/C
RST-
RST+
FDDRQ+
HRQ+
HLDA+
PØC-
R7
220
C13
220PF
PRDY+
XRDY+
CLK-
4.7K R3
4.7K R4
DBIN+
PWR-
AEN+
BDBIN-
IØRD-
IØWR-
TC+
330 8A01
330 8A13
330 8A12
8T97
244
INDUSTRIAL MICRO SYSTEMS
SCALE NONE
DATE 10-7-80
APPROVED BY
DRAWN BY KRM
REVISED
S8000 FLOPPY CONTROL
L00401 B
DRAWING NUMBER
2 OF 6

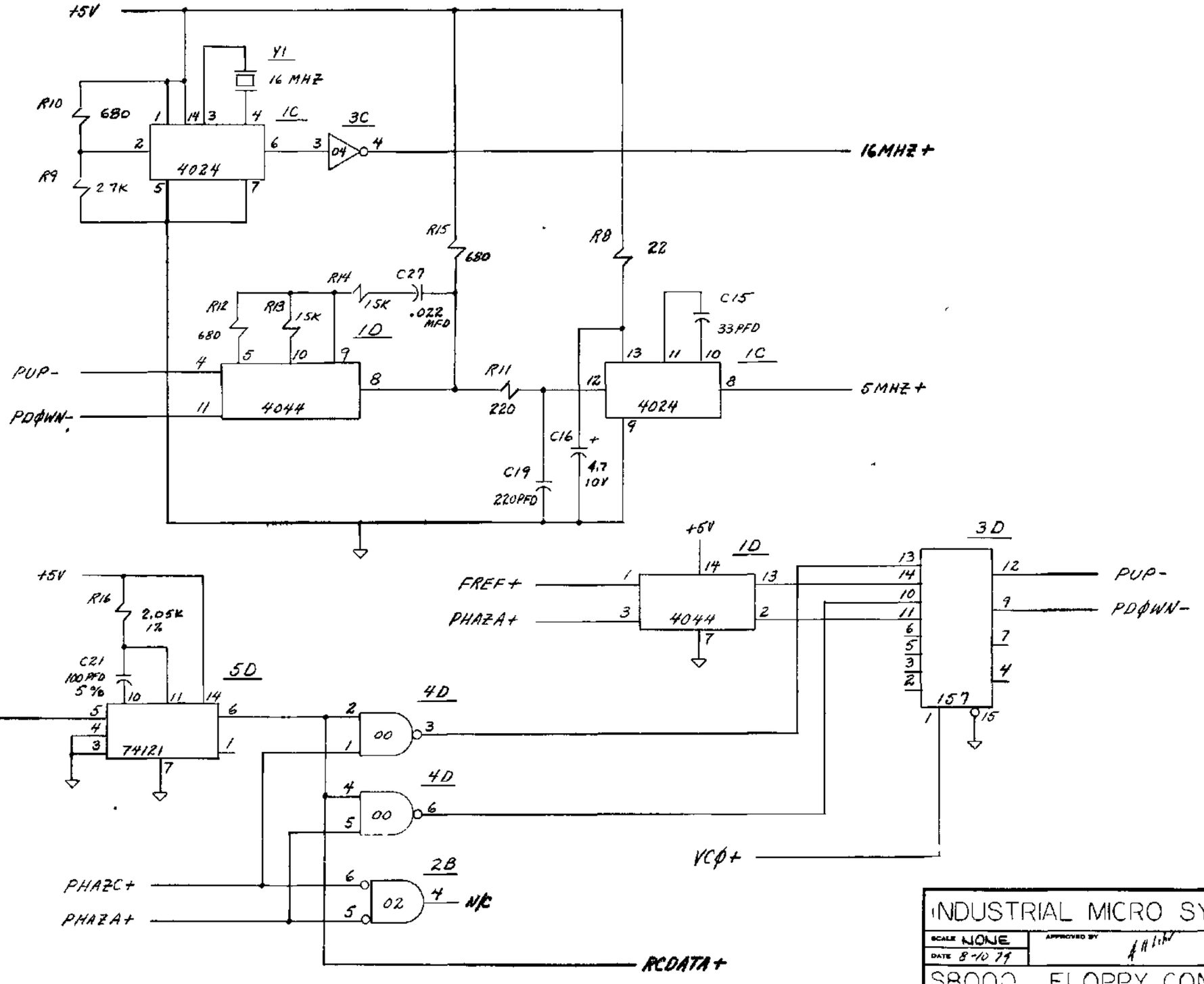

INDUSTRIAL MICRO SYSTEMS		
SCALE NONE	APPROVED BY	DRAWN BY
DATE 8-10 79		REVISED
S8000 FLOPPY CONTROL		
L00401B		DRAWING NUMBER 4 OF 6

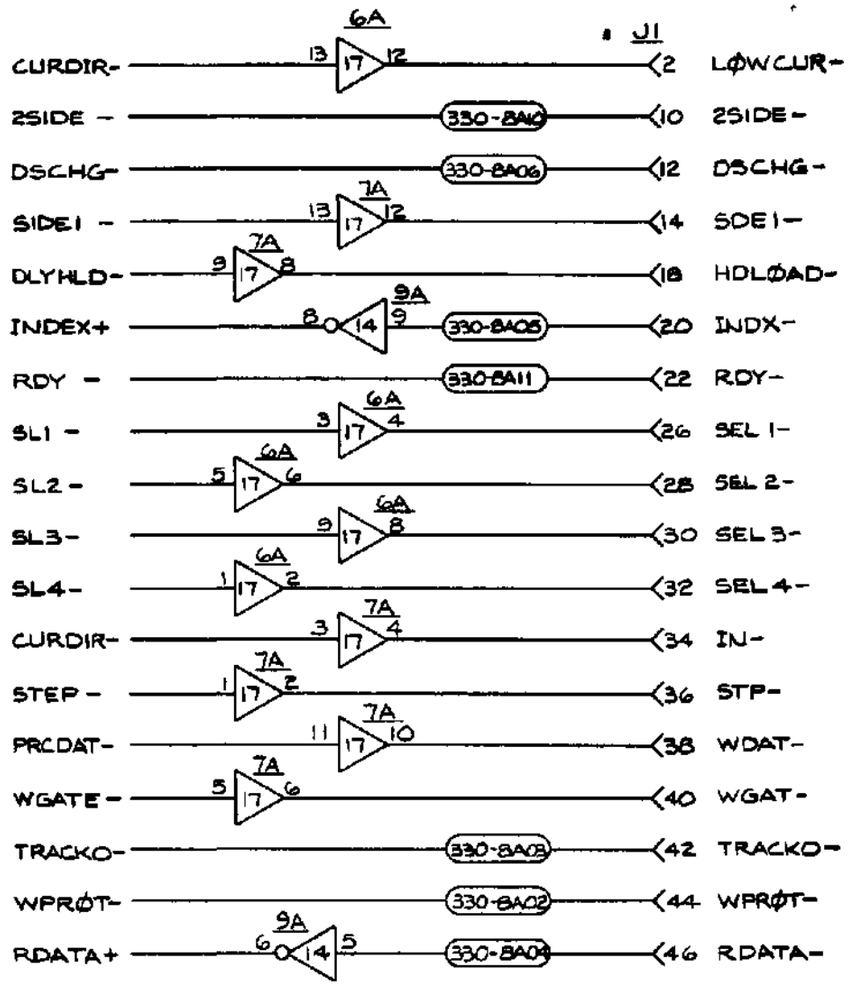

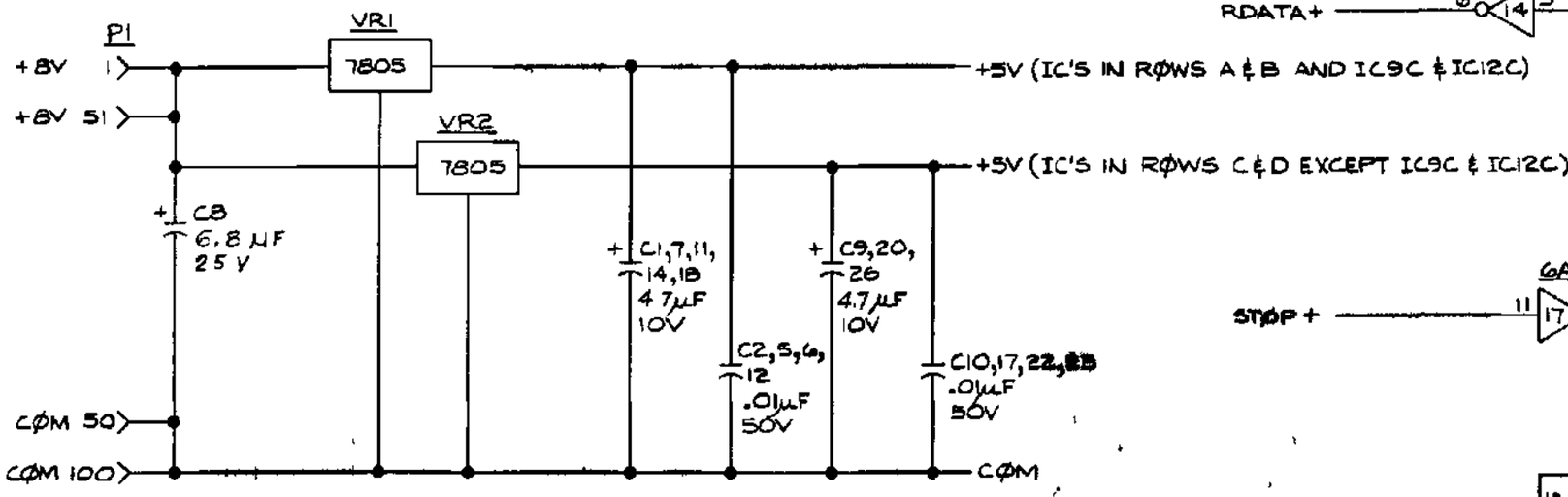

INDUSTRIAL MICRO SYSTEMS

SCALE NONE	APPROVED BY	DRAWN BY KRM
DATE 10-7-80		REVISED

S8000 FLOPPY CONTROL

L00401 B — DRAWING NUMBER 6 OF 6