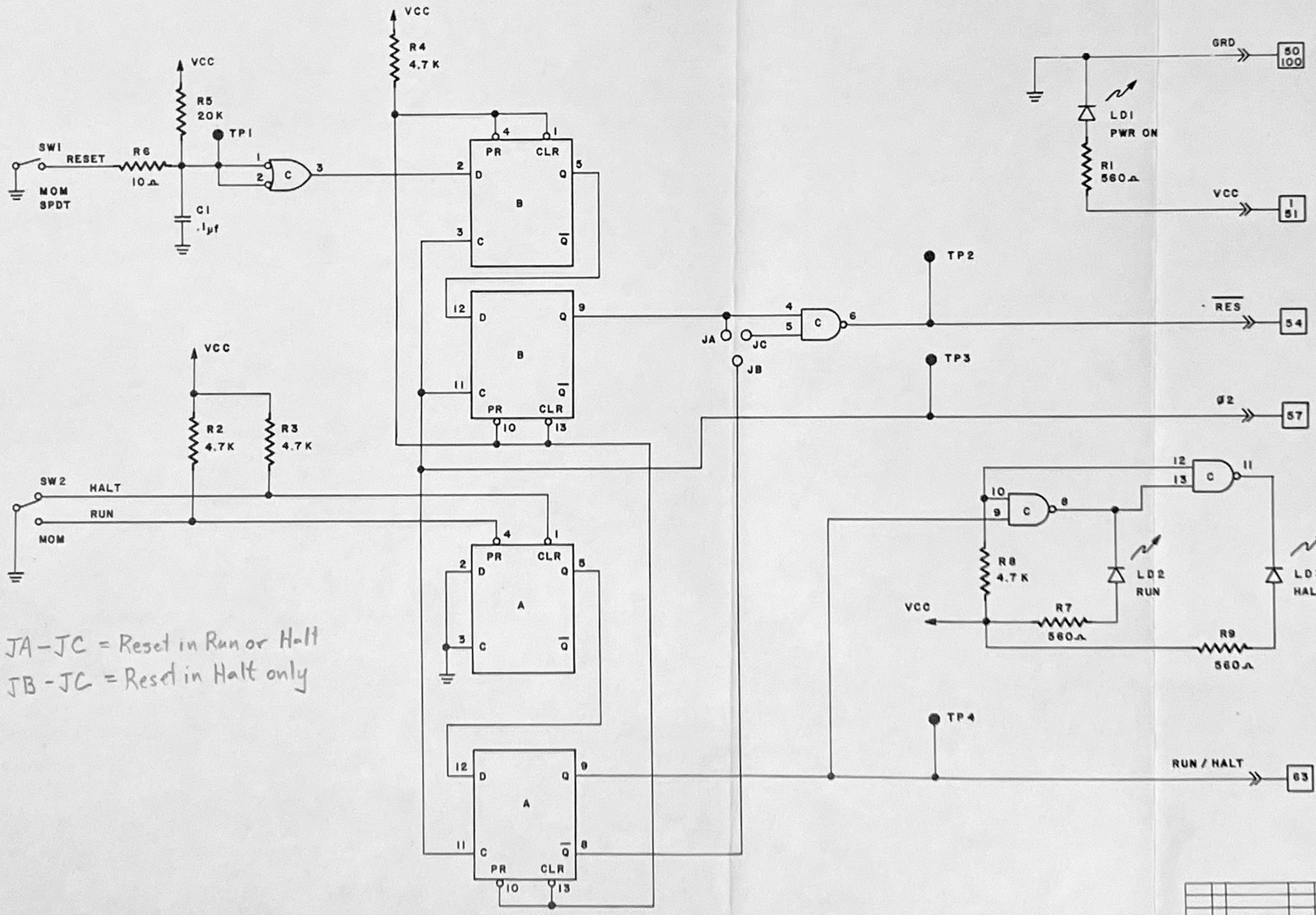

JA-JC = Reset in Run or Halt
JB-JC = Reset in Halt only

mits inc

6800 TURNKEY
SCHEMATIC

RS

SH 4-11