WANG

3402

5536 WORKSTATION

Models

5536-1	TC-5536-2
5536-2	TC-5536-3
5536-3	TC-5536-4
5536-4	

Customer Engineering
Product Maintenance Manual

741-0522

PREFACE

This document is the Standard Maintenance (STD) Manual for the 5536 Workstation. It is organized in accordance with the approved STD outline established at the Field/Home Office Publications meetings conducted on September 14th and 15th, 1982. The scope of this manual reflects the type of maintenance philosophy selected for this product (swap unit, printed circuit assembly, chip level or any combination thereof).

The purpose of this manual is to provide the Wang-trained Customer Engineer (CE) with instructions to operate, troubleshoot and repair the 5536 Workstation. It will be updated on a regular schedule.

A comment card has been included at the end of this manual for user feedback. Evaluations of manual content, with suggested additions and deletions, as well as any corrections are welcome.

Second Edition (March 1984)

This edition of the 5536 Workstation STD manual obsoletes document number 729-0522-A. The material in this document may only be used for the purpose stated in the Preface. Updates and/or changes to this document will be published as Publication Update Bulletins (PUB's) or subsequent editions.

This document is the property of Wang Laboratories, Inc. All information contained herein is considered company proprietary, and its use is restricted solely for the purpose of assisting the Wang-trained CE in servicing this Wang product. Reproduction of all or any part of this document is prohibited without the prior consent of Wang Laboratories, Inc.

© Copyright WANG Labs., Inc. 1984

WARNING

Do not open the switching power supply under any circumstance. Extremely dangerous voltage and current levels (in excess of 300 volts DC and unlimited current) are present within the power supply.

Do not attempt to repair the switching power supply; it is field replaceable only.

After powering the unit down and disconnecting the AC power plug from the wall outlet, allow one minute before removing the power supply to provide adequate time for any residual voltage to drain through the bleeder resistors.

TABLE OF CONTENTS

CHAPTER 1
INTRODUCTION

SECTION	TITLE	PAGE
1.1	Scope	1-1
1.2	Purpose	1-2
1.3	Related Documentation	1-2
1.3.1	Diagnostics	1-2
1.4	System Description	1-3
1.5	System Specifications	1-5
1.5.1	General Specifications	1-5
1.5.2	Physical Specifications	1-5
1.6	Workstation Options	1-6

CHAPTER 2
THEORY OF OPERATION

2.1	Functional Overview	2-1
2.2	Basic Workstation Functions	2-1
2.2.1	Z80A CPU	2-1
2.2.2	Diagnostic Memory	2-1
2.2.3	Parity Generation and Test	2-1
2.2.4	In-Out Decoder	2-1
2.2.5	Keyboard Interface Logic	2-3
2.2.6	Video Display Logic	2-3
2.2.7	Data Link	2-3
2.3	Functional Description	2-3
2.3.1	210-7545-2 PCA	2-3
2.3.2	210-7544/7744 PCA	2-12
2.4	Telecommunications Option	2-18
2.4.1	General Overview	2-18
2.4.2	Functional overview	2-19
2.4.3	Functional Description	2-19

CHAPTER 3
OPERATION

3.1	Indicators and Controls	3-1
3.2	Keyboard	3-2
3.3	Normal Operation	3-3
3.4	Telecommunications	3-3

TABLE OF CONTENTS

CHAPTER 4
INSTALLATION

SECTION	TITLE	PAGE
4.1	Incoming Inspection	4-1
4.2	Unpacking	4-1
4.3	Workstation Inspection	4-1
4.4	Installation	4-2
4.4.1	Initial Power-up	4-2
4.4.2	Cable Interconnections	4-3
4.4.3	Switch Settings	4-5
4.4.4	Initial Operational Check-Out	4-6
4.5	Telecommunications option Operation	4-6
4.5.1	Switch Settings	4-6
4.5.2	Installation	4-6
4.5.3	Accessory Items	4-7

CHAPTER 5
PREVENTIVE AND CORRECTIVE MAINTENANCE

5.1	Preventive Maintenance	5-1
5.1.1	General	5-1
5.1.2	Workstation Checkout	5-1
5.2	Corrective Maintenance	5-2
5.2.1	General Maintenance	5-2
5.2.2	Removal and Replacement	5-5

CHAPTER 6
SCHEMATIC DIAGRAMS

CHAPTER 7
ILLUSTRATED PARTS BREAKDOWN

CHAPTER 8
TROUBLESHOOTING PROCEDURES

8.1	General Troubleshooting	8-1
8.2	PCA 7544/7744 Problems	8-3
8.3	PCA 7545 Problems	8-3
8.4	TC Troubleshooting	8-4

APPENDICES

A Key Abbreviations
B Mnemonics
C Interconnection Diagram

COMMENT SHEET

LIST OF FIGURES

NUMBER	TITLE	PAGE
1-1	5536 Series Workstation (Front View)	1-1
1-2	5536 Series Workstation (Rear View)	1-2
1-3	5536 PCS Assemblies	1-3
1-4	PCA Locations	1-4
2-1	Workstation Block Diagram	2-1
2-2	Video Display and Control Block Diagram	2-3
2-3	Dot Matrix Display	2-4
2-4	Keyboard Interface	2-5
2-5	I/O Decoding	2-8
2-6	Z80A CPU	2-10
2-7	Memory Organization	2-12
2-8	Data Link Block Diagram	2-15
2-9	TC Configuration	2-17
2-10	TC Connection Diagram	2-18
2-11	210-7541 PCA Block Diagram	2-19
3-1	5536 Workstation (Front View)	3-1
3-2	5536 Workstation (Rear View)	3-2
3-3	5536 Keyboard	3-3
4-1	115/230 Switch Location	4-2
4-2	Workstation Cable Interconnections	4-3
4-3	Workstation Rear Panel	4-3
4-4	210-7545 Switch Settings	4-4
4-5	210-7744 Switch Settings	4-5
4-6	Telecommunications 210-7541 Switch Settings	4-7
5-1	210-7744 Voltage Test Points	5-2
5-2	210-7656 Adjustment and Test Points	5-3
5-3	210-7456 CRT Display Voltage Checks	5-4
5-4	Cover Removal/Replacement	5-6
5-5a	Keyboard Removal/Replacement	5-7
5-5b	Keyboard Removal/Replacement	5-8
5-6	Chassis Removal/Replacement	5-9
5-7a	Power Supply Removal/Replacement	5-10
5-7b	Power Supply Removal/Replacement	5-11
5-8a	Motherboard/Rear Panel Removal/Replacement	5-12
5-8b	Motherboard/Rear Panel Removal/Replacement	5-13
5-9	CRT Removal/Replacement	5-14
5-10	Regulator PCA Removal/Replacement	5-15
8-1	5536 Troubleshooting Flowchart	8-2
8-2	TC Troubleshooting Flowchart Page 1	8-3
	TC Troubleshooting Flowchart Page 2	8-4
	TC Troubleshooting Flowchart Page 3	8-5

CHAPTER 1 INTRO-DUCTION

CHAPTER 1
INTRODUCTION

1.1 SCOPE

This manual describes the 5536-1, 5536-2, 5536-3, 5536-4, TC-5536-2, TC-5536-3 and TC-5536-4 workstations, which are collectively referred to as the 5536 series workstation in this manual. The workstation can be upgraded for use on a VS system with the installation of a UJ kit as specified below.

32K:	5536-1	to	2246C	UJ Kit # 501
	5536-2	to	2246C	UJ Kit # 503
64K:	5536-1	to	2256C	UJ Kit # 3020
	5536-2	to	2256C	UJ Kit # 3021
	5536-3	to	2256C	UJ Kit # 3022
	5536-4	to	2256C	UJ Kit # 3023

The kit contains a VS PROM (remove OIS PROM on the 7545 PCA and insert the VS PROM) and a VS Keyboard and keyboard plate. If converting from the 5536-1 to the VS2246C or from the 5536-1, 2, or 3 to the VS2256C, a memory board will also be included.

All the workstations in this series are identical externally, but vary internally. Figures 1-1 and 1-2 show front and rear views of the workstation.

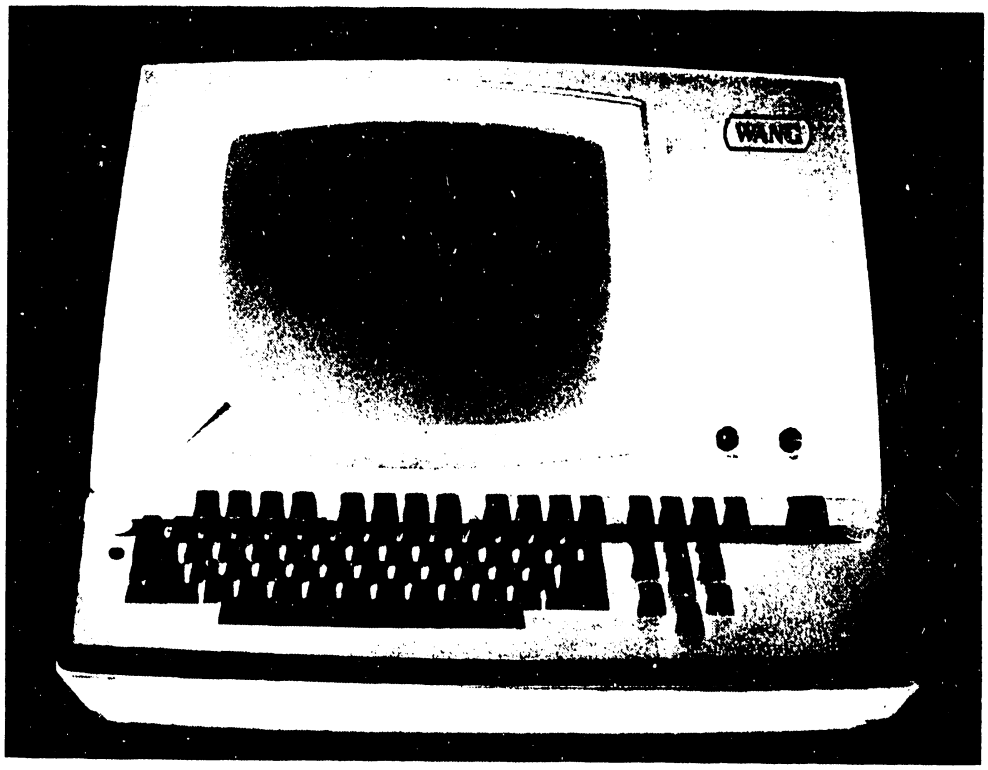

Figure 1-1. 5536 Series Workstation (Front View)

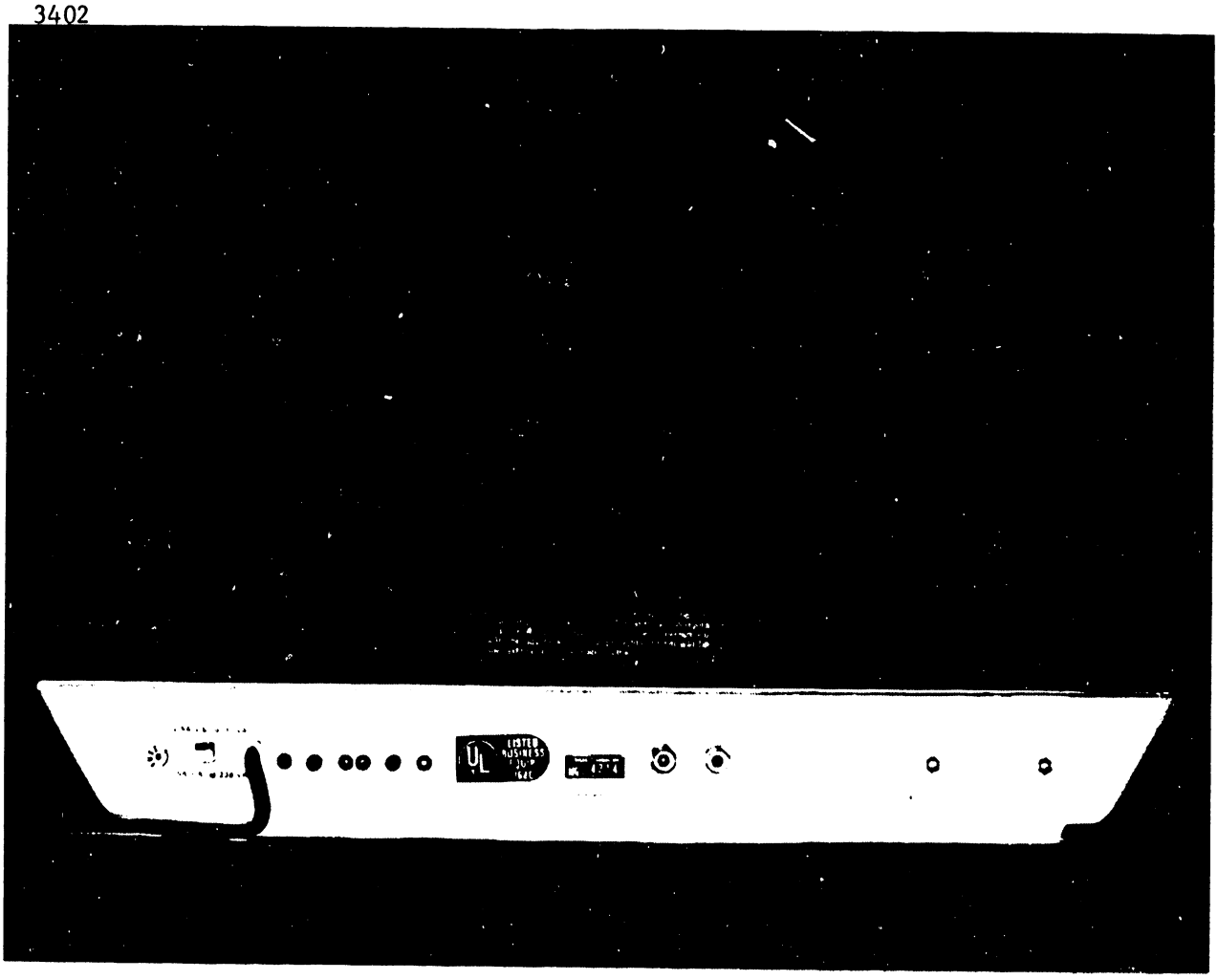

Figure 1-2. 5536 Workstation (Rear View)

1.2 PURPOSE

This manual provides the information necessary to:

- o Unpack and install each workstation
- o Align, adjust, and perform diagnostic tests
- o Perform basic operations
- o Perform preventive maintenance
- o Perform troubleshooting and fault diagnosis to the circuit-board level
- o Perform removal/replacement procedures of major sub-assemblies

1.3 RELATED DOCUMENTATION

1.3.1 DIAGNOSTICS

The diagnostics listed below were developed and supported by the Lowell Corporate Diagnostic Group for use in the repair of WP/OIS/VS systems.

Description	Part Number
On-Line Device Type 1	195-2534-3 (WP/OIS)
On-Line Device Monitor	195-702-0175 (VS)

1.3.2 OPERATOR GUIDES

700-5739A	OIS Operator Guide
700-5740B	OIS Operator's Reference Guide
700-5294C	Corporate Publications Literature Catalog

The user manuals listed above are available by request to the appropriate address below:

DOMESTIC

WANG LABORATORIES INC.
General Services M/S 1183
51 Middlesex St.
N. Chelmsford, MA 01863

INTERNATIONAL

WANG LABORATORIES INC.
Intl. Documentation Coord.
M/S 1151
1 Industrial Ave.
Lowell, MA 01851

1.4 SYSTEM DESCRIPTION

The 5536 workstations described in this manual are Z80A-based devices intended for operation with a master system unit in an OIS configuration. Optional telecommunications capability and up to 64K of workstation RAM are available. Communication with the master unit is by means of a two-way serial data link through which the master may transfer data/instructions directly into workstation RAM. Direct data transfer is accomplished through DMA logic/software.

Each workstation contains a power supply and provision for up to three printed circuit assemblies (PCAs) on a standard motherboard (210-7542).

This manual contains valid information for systems with boards at the revision levels listed in Table 1-1. Board locations are shown in Figure 1-3. Note that the 7544 and the 7744 PCAs are currently compatible for each memory configuration; the 7744 also provides bootstrap diagnostics.

WANG P/N	NAME/FUNCTION	CURRENT REV LEVEL
210-7229	KEYBOARD	REV. 11
210-7456	12" CRT VIDEO	REV. 7
210-7541	TC INTERFACE	REV. 2
210-7542	MOTHERBOARD	REV. 4
210-7545-A	CPU/CRT WP/OIS	REV. 8
210-7545-C	CPU/CRT VS, WP/DP	REV. 8
210-7545-D	CPU/CRT VS, DP ONLY	REV. 8
210-7656	POWER SUPPLY REGULATOR	REV. 4
210-7544-A	DATA LINK MEMORY/16K	REV. 5
210-7744-A	DATA LINK MEMORY/16K	REV. 5
210-7544-1A	DATA LINK MEMORY/32K	REV. 5
210-7744-1A	DATA LINK MEMORY/32K	REV. 5
210-7544-2A	DATA LINK MEMORY/48K	REV. 5
210-7744-2A	DATA LINK MEMORY/48K	REV. 5
210-7544-3A	DATA LINK MEMORY/64K	REV. 5
210-7544-3A	DATA LINK MEMORY/64K	REV. 5

Figure 1-3. 5536 PCA Assemblies

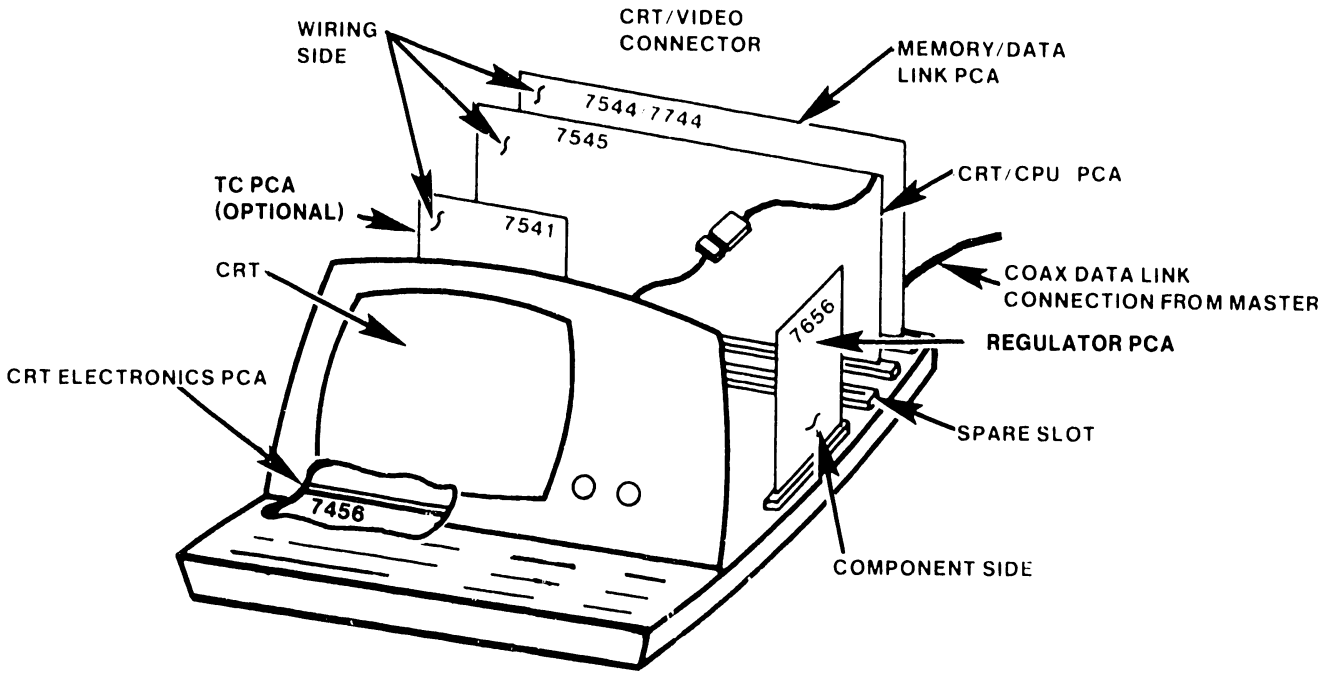

Figure 1-4. PCA Locations

1.5 SYSTEM SPECIFICATIONS

This section lists general and physical workstation specifications.

1.5.1 GENERAL SPECIFICATIONS

Microprocessor	Z80A-based
Clock Frequency	3.986 MHz (CPU clock)
Data Link	4.275 MBPS Serial Asynchronous; 2000 ft. max. cable length
Keyboard	Standard, Standard with numeric pad; Expanded; Expanded (international) with numeric pad
Memory	64K main RAM maximum limit
CRT	
Display Size	12 in. diagonal (30.50 cm)
Capacity	24 lines, 80 characters/line
Character Height	0.16 in. (0.41 cm)
Character Width	0.09 in. (0.23 cm)
Character Set	128 characters, including uppercase and lowercase letters; each character is assigned one or more attributes for high or low-intensity display, reverse video, blinking, or underlining

1.5.2 PHYSICAL SPECIFICATIONS

Dimensions	Width	Depth	Height
Inches	19.75	20.50	13.50
Centimeters	50.20	52.00	34.30

Weight	54 lbs. (24.5 kg.)
Cable Specifications	6 ft. (1.8 m) line cable from unit to power source; dual coax cable between workstation and master; max. 2000 ft. (615 m), min. 25 ft. (7.7 m)
Power Requirements	115 V ac (± 10%) 60 Hz 2.5 A 230 V ac (± 10%) 50 Hz 1.5 A
Operating Environment	
Temperature	50°F to 80°F (10°C to 30°C)
Relative Humidity	35% to 65% noncondensing (recommended) 20% to 80% noncondensing (allowable)

1.6 WORKSTATION OPTIONS

The 5536 workstation is available in four models; all, with the exception of the 16K model, are capable of supporting the TC option.

5536-1	16K Memory
5536-2	32K Memory
5536-3	48K Memory
5536-4	64K Memory

CHAPTER 2

THEORY OF OPERATION

CHAPTER 2
THEORY OF OPERATION

2.1 FUNCTIONAL OVERVIEW

Workstation logic resides on two circuit boards, PCA 210-7545 and PCA 210-7744 (figure 2-1). The major logic functions for each board are:

210-7545-2 PCA
- o Instruction/Bus control(CPU)
- o Video Display Logic
- o CRT Memory
- o Keyboard Logic

210-7744 PCA (Models A, 1A, 2A and 3A depending on memory size)
- o Main Memory
- o Data Link

These functions are interconnected by the System Address Bus and the System Data Bus.

If the workstation contains the TC option, a third PCA -- 210-7541-- will be located in slot number 3 of the motherboard. See section 2.4 for more information on the TC option.

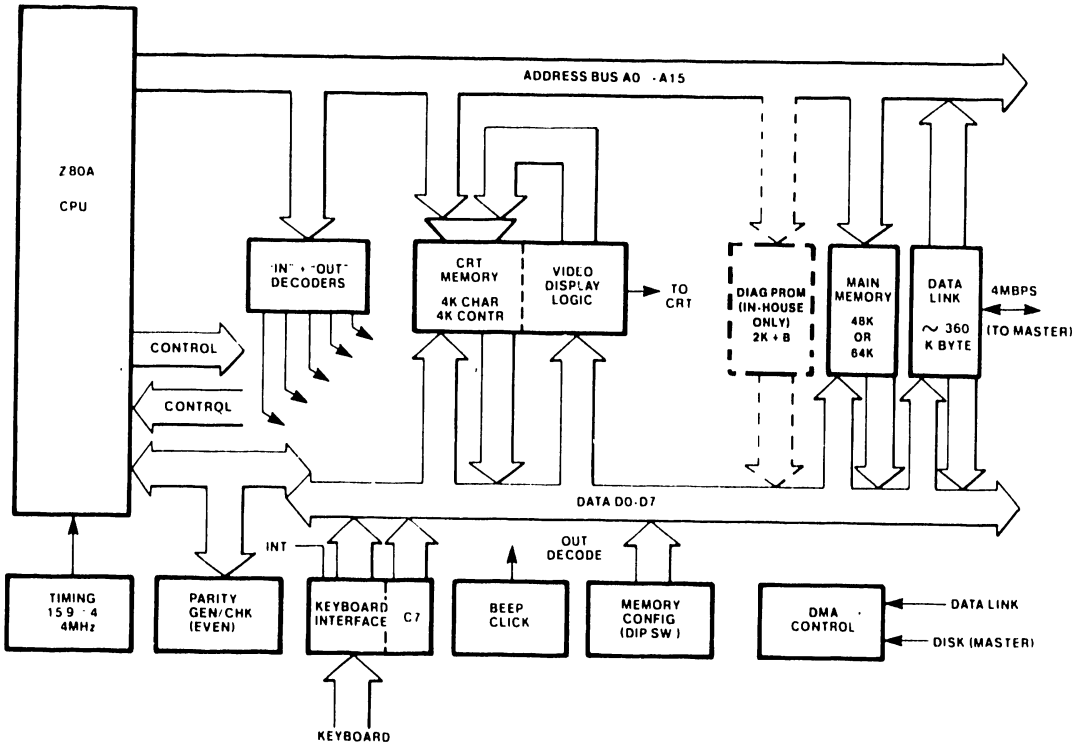

Figure 2-1. Workstation Block Diagram

2.2 BASIC WORKSTATION FUNCTIONS

2.2.1 Z80A CPU

P s operations are controlled by the Z80A Central Processor (CPU). The CPU receives sequential instructions from Main Memory over the data bus. It assigns device access and tasks based on these instructions and communicates with workstation logic through the data, address, and control busses.

2.2.2 DIAGNOSTIC MEMORY

A diagnostic PROM contains special instructions to facilitate component-level maintenance and repair. The PROM is only used during the repair of the 7545 PCA at the repair facility and therefore is not shipped with the workstation.

2.2.3 PARITY GENERATION AND TEST

The Parity Generator/Tester checks the accuracy of all data received by the CPU before it enters the processor. Parity errors are communicated to the user through CRT display messages.

2.2.4 IN-OUT DECODERS

Memory instructions IN and OUT instruct the CPU to transfer data into or out of an I/O device rather than memory. The IN-OUT decoder identifies the selected I/O device.

2.2.5 KEYBOARD INTERFACE LOGIC

During an appropriate IN instruction the Keyboard Interface places a character code onto the Data Bus. The CPU examines the character and stores it in the CRT memory buffer to be placed on the CRT display.

2.2.6 VIDEO DISPLAY LOGIC

Video Display Logic continuously reads characters from CRT memory, converts them into an appropriate stream of video dots, and arranges these dots on the CRT display. Video Display Logic also reads a Control Memory. This Control Memory indicates the display status of each character: normal, intensified, underlined, etc.

2.2.7 DATA LINK

The Data Link permits workstation memory to be loaded (or read) by the master. The master can write new memory instructions into workstation memory; it can also record (archive) information entered by the workstation onto a common disk. The workstation CPU is disabled when the Master uses the Data Link. During this time Direct Memory Access (DMA) logic, rather than the CPU, synchronizes memory read/write operations. DMA logic does not support CRT memory transfers.

2.3 FUNCTIONAL DESCRIPTION

This section provides descriptions of all workstation logic functions.

2.3.1 210-7545-2 PCA

The 7545 PCA contains VIDEO DISPLAY LOGIC, CRT MEMORY, KEYBOARD INTERFACE and Z80A CPU, and these related logic functions:

- o IN-OUT decoders
- o Parity generation and check (even parity)
- o Memory configuration (DIP switches)
- o Audio prompt (beep/click)

2.3.1.1 Video Display Logic (Figure 2-2)

The 5536 workstations display 1920 character locations arranged in 24 rows of 80 characters or columns. Each character on the screen has a unique memory-address containing the code of the character being displayed. The number of characters per row may be extended to 158 to accommodate the extended columns used by wide-platen printers and line printers. These additional 1872 character spaces (total 3792) are also accommodated in CRT memory; however, only 80 columns can be displayed at one time. The additional row length can only be observed by performing a horizontal scroll (Optional-WP, Standard-OIS).

An additional four-bit control field is associated with each CRT address. This control field permits each character to be blinked, intensified, underlined, and/or accompanied by a cursor. Separate parity bits accompany each character and each control field to ensure data integrity.

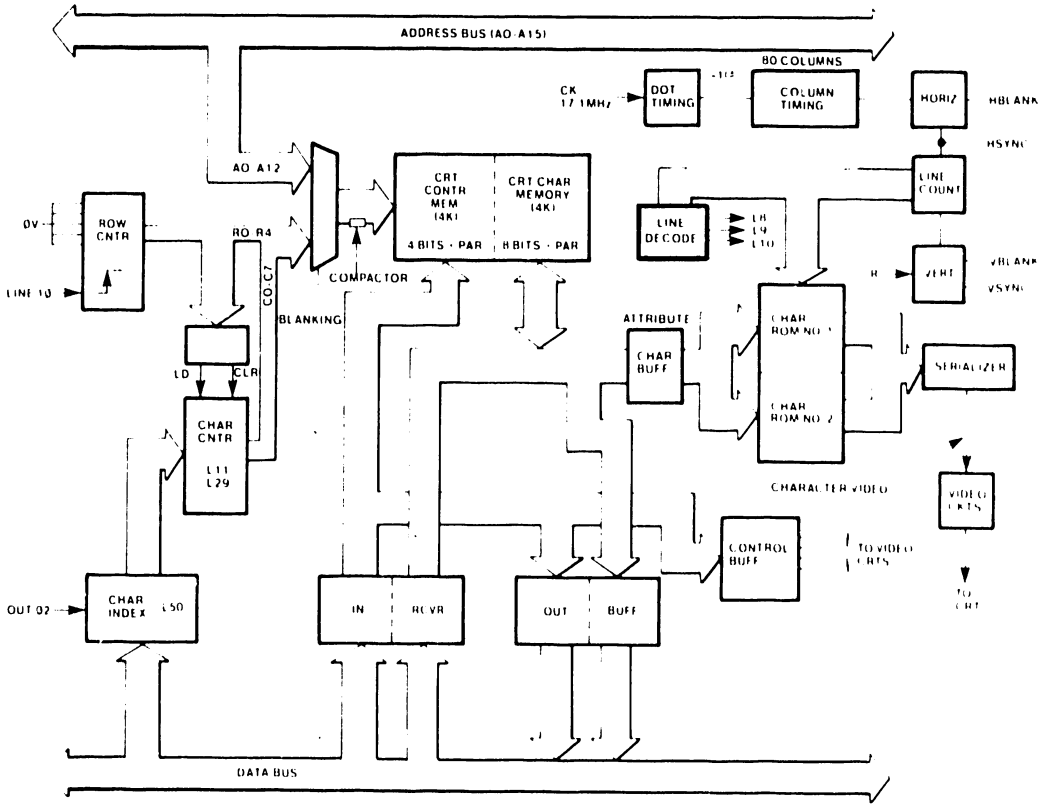

Figure 2-2. Video Display and Control Block Diagram

Memory locations are sequentially displayed by addressing memory with "column" (character) and "row" (line) counters. Extended rows are accommodated by indexing the column counter with an offset value supplied by the CPU.

The display initially presents all 80 characters in the top row. When the last character has been displayed, the row count is incremented and the next row of 80 consecutive locations is displayed. When the last character of the last row is reached, the cycle is repeated. Sixty screen displays occur per second.

2.3.1.2 Dot Matrix Display (Figure 2-3)

The workstation CRT displays and emphasizes characters using a raster scan display. The display is partitioned into a series of 10x11 dot matrices. Alphanumeric and special characters are created by illuminating a specific pattern of dots within the matrix associated with each character position. Specific characters are displayed in an 8x8 portion of the matrix; cursor and underlines are displayed in the lower 10x2 portion of the matrix.

Most character information is contained in the first seven lines of the matrix. The eighth line provides room for descenders, such as the tail of a comma or the bottom portion of the letter "g." The ninth line, line #8, may contain half of a blinking cursor. The tenth line, line #9, may contain an underline or the bottom half of the cursor. The eleventh line, line #10, provides vertical spacing.

A horizontal group of matrices form a character row. Information within a matrix is displayed by illuminating an appropriate selection of dots for each character in a row during eight successive scan lines.

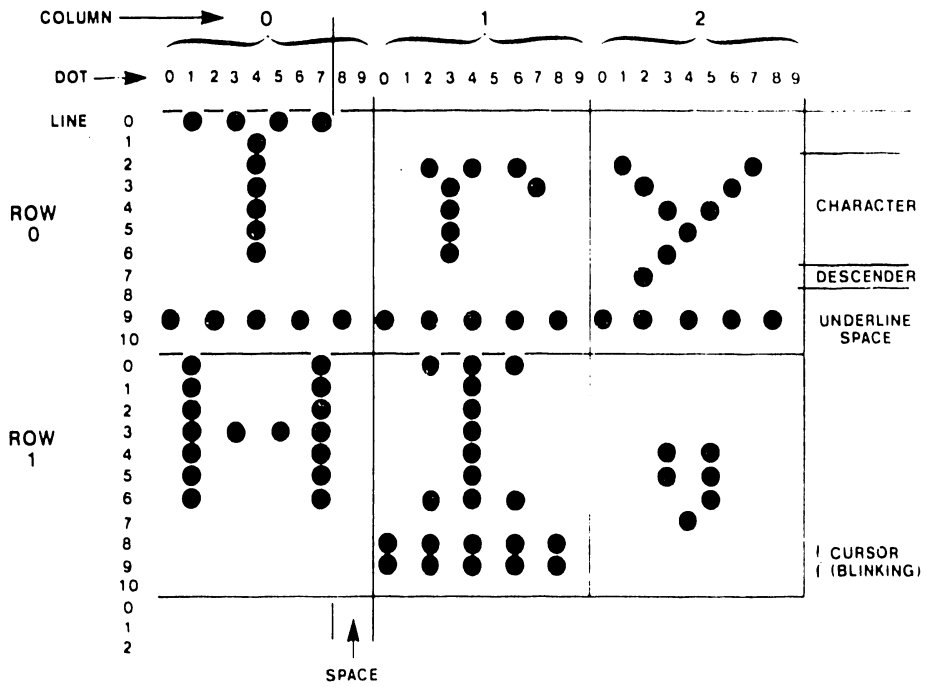

Figure 2-3. Dot Matrix Display

2.3.1.3 Character Generation (Figure 2-4)

Video display logic continuously reads characters from CRT memory. Either of two character ROMs forms each character. Each ROM converts character codes into illuminated-dot sequences that form selected character shapes on the display during each scan line. ROM output is serialized and supplied to the video output circuit. Video display logic also reads a special control memory that determines the display status of each character (normal, intensified, underlined, etc.).

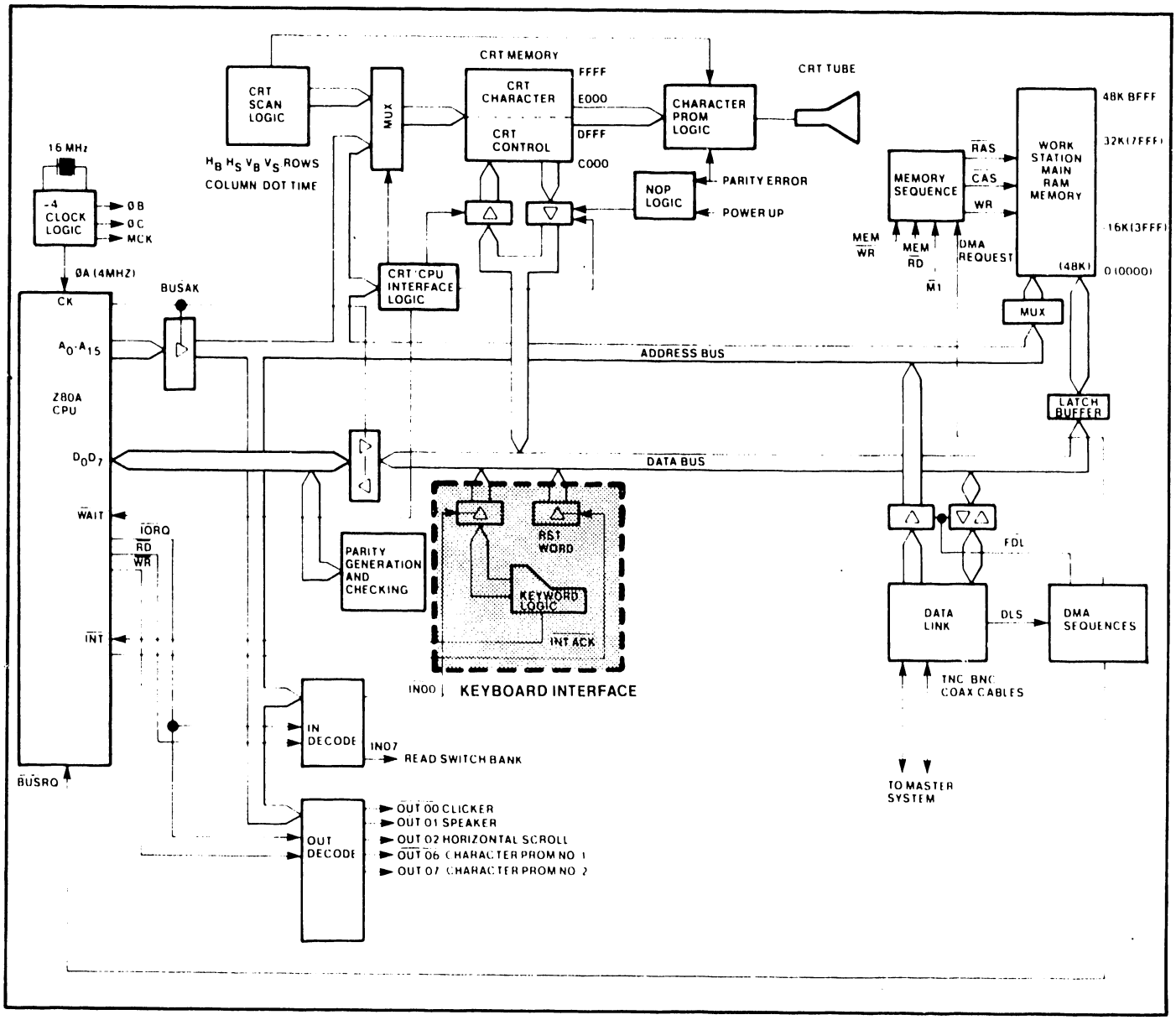

Figure 2-4. Keyboard Interface

2.3.1.4 Video Control Logic

Video control logic produces a four-level analog signal for CRT electronics. The four levels provide:

- o Normal display/intensified display
- o Blanked display/synch pulses (intensified blanking)

The analog signal is digitally generated and controlled. It causes characters to be displayed at normal intensity, high intensity, underlined, and blinking. It also displays an intensified and blinking, double-lined cursor, and manages CRT blanking.

Information is blanked during vertical and horizontal retrace, each time CRT memory is updated or read by the CPU, and between characters while the character-video shift register is being loaded.

2.3.1.5 CRT Memory Input/Output Control

The Z80A CPU employs the same control signals to read information from the CRT memory buffer and to read main memory. Mapping the CRT memory buffer into the top 16K of the Z80A memory-addressing range speeds the frequent CRT display updates required for word processing. This upper addressing range may be reassigned by software to serve as main memory.

Unlike main memory, neither the Data Link nor the Disk can employ DMA to read CRT memory. This is a consequence of the Row/Column addressing scheme used by CRT memory.

The Control Input and Output Buffers are disabled and the character-output buffer cleared both during a Power-Up Reset and when bad parity is found. Either condition freezes the CRT display and forces zeros onto the Data Bus.

Data is clocked into the character buffer at the end of a CRT character time while CRT memory is being addressed from the bus. The bus does not address CRT memory unless a high address is received with a Memory Request asserted; Workstation DMA devices do not use Memory Request and cannot write into CRT memory.

2.3.1.6 Keyboard Interface (Figure 2-4)

The keyboard interface accepts characters from the keyboard and generates a processor interrupt, enabling data to be transferred by the CPU to CRT memory and thus to the display. During each transfer, keyboard interface logic supplies the keyboard with a signal to inhibit additional transfers until the current character has been accepted by the processor.

The Z80A CPU responds to keyboard interrupts by issuing a command which forces a hard-wired signal, C7, onto the data bus. The CPU interprets C7 as a RESTART command.

The keyboard interface also performs these functions:

- o Keystroke debounce
- o Repeat keys

2.3.1.7 Keystroke Processing

There are two types of keystroke operations: single key and repeat key. Single keystroke processing requires the keyboard interface to:

- o Recognize the keystroke
- o Inhibit the generation of additional keystrokes
- o Inhibit the recognition of additional keystrokes
- o Provide time (10ms) for keystroke debounce
- o Generate an interrupt request
- o Clear interrupt and character/keystroke inhibits as soon as the CPU reads the character.

Repeat keystroke processing requires these additional interface functions:

- o Initiate a quarter-second delay to recognize a request for repeat
- o Recognize repeat keys
- o Generate repetitive interrupts every 60 ms during normal horizontal movement
- o Shorten the repeat delay to 30 ms during horizontal cursor movement. (The cursor crosses more character spaces when moving horizontally than when moving the same distance vertically.)
- o Permit any key to be repeated when the desired key is pressed nearly simultaneously with any repeat key.

2.3.1.8 IN-OUT Decoders (Figure 2-5)

Certain memory instructions instruct the CPU to transfer data either into or out of an I/O device rather than Workstation memory. These instructions are designated IN and OUT, followed by two-digit hex identifiers. When the CPU receives an IN or OUT instruction, the IN-OUT decoders identify the device. For example, a signal from the IN decoder (during an appropriate IN instruction) causes the keyboard interface to place a character code onto the data bus. The instruction sequence causes the CPU to examine the character and store it in the CRT memory buffer, to be displayed on the CRT display.

The IN-OUT decoders also control the Workstation audio prompt (beep/click) feature, and optional horizontal scroll requests.

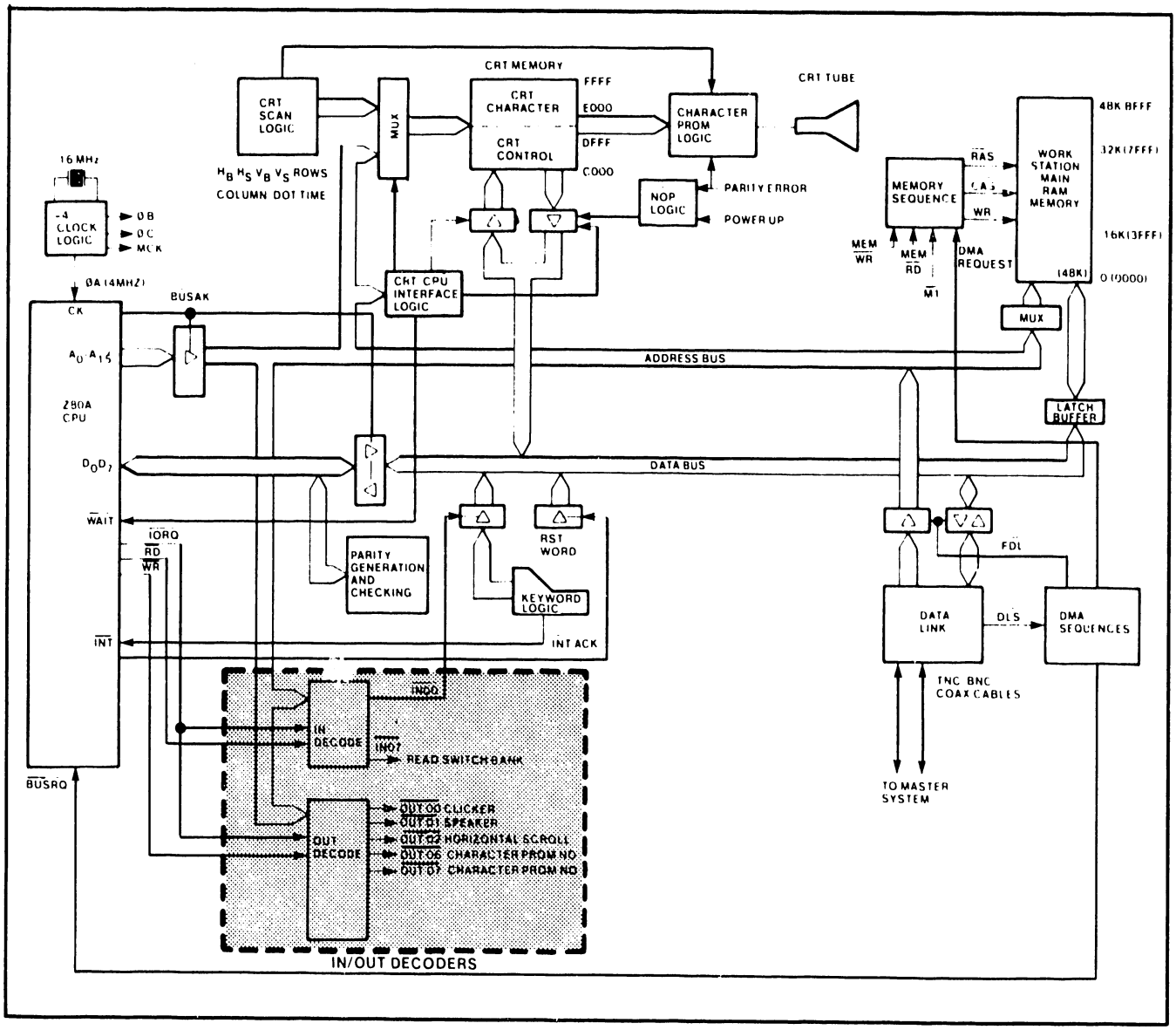

Figure 2-5. I/O Decoding

2.3.1.9 Parity Generation and Check

Memory Parity logic is one of two parity generation/detection circuits. The other circuit is integral to the Data Link. Memory Parity logic generates and then tests for even parity on all data transfers leaving or entering the CPU through the data bus.

During a CPU write, each parity bit is calculated and stored in Main Memory, CRT Character Memory, or CRT Control Memory, depending upon which memory is enabled.

The parity line is checked on each CPU read. If a Memory Parity Error is detected the error is noted in the the CPU status register. Such an error is also indicated in this register during a CRT control memory write. The Data Link also tests memory parity before generating its own line parity during a Master Read command.

A detected memory parity error immediately freezes the CRT display and generates all zeroes on the data bus. This is done by disabling the CRT memory receivers and clearing the character-output buffers. An all-zero data bus is interpreted by the CPU as a string of continuous NOP instructions. The NOPs disable the CPU while maintaining the necessary Memory Refresh cycles.

The CPU can escape from the disabling NOPs only through a Z80A RESET. Reset can be accomplished by:

- Executing Data Link RESTART command
- Accessing Diagnostic PROM
- Cycling AC power.

Following CPU restart, system software attempts to locate the error and to determine if processor operation should continue despite the error. The processor may override parity protection. In this mode, parity errors are indicated on the display by forcing the underlining of all CRT characters.

Parity detection circuitry is tested by forcing bad parity to be written and then reading back the same data location.

2.3.1.10 Z-80A CPU (Figure 2-6)

The Z80A CPU controls workstation logic. CPU signals are sequenced according to both its internal instruction set and instructions received from main memory over the data bus. The CPU requires a single +5V DC supply, and employs a 4 MHz clock as its time base.

Bi-directional data flow is accomplished by an eight-bit, tri-state data bus. The CPU transmits address information through a sixteen-bit, tri-state address bus. A reset line initializes the CPU and the six control-output lines. The six control-output lines are:

- M1 -- CPU Fetch Cycle. This line is active during the first cycle (fetch cycle) of each instruction-request cycle, and during the special interrupt cycles.

- MREQ -- Memory Request. Active when the CPU accesses memory to fetch either an instruction or data.
- IORQ -- Input/Output Request. Becomes active to indicate either an input or an output to a peripheral device during the interrupt-acknowledge cycles.
- RD -- Read. When active, indicates that the CPU will input data while performing a memory-access or I/O instruction.
- WR -- Write. When active, indicates that the CPU will output data while performing a memory-access or I/O instruction.
- RFSH -- Refresh. During an M1 (memory period 1) cycle, the CPU outputs an address for memory refresh. RFSH confirms the active presence of that address.

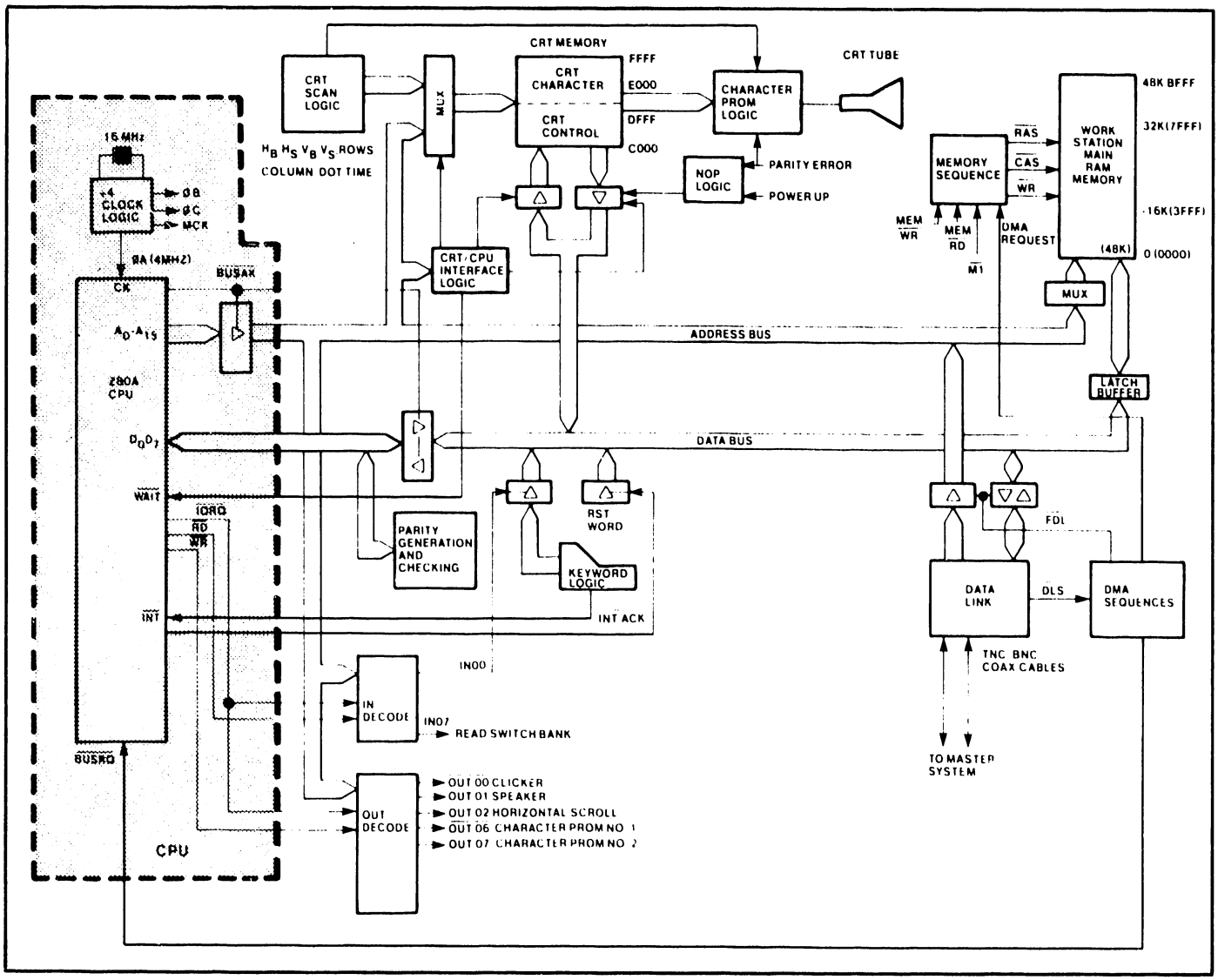

Figure 2-6. Z80A CPU

In addition to the control-output lines, there are three CPU control-input lines:

- o BUSRQ -- Bus Request. Becomes active when an outside device requests bus access. BUSRQ input causes the CPU to switch its address, data, and status lines into a high-impedance state to accommodate the outside device.

- o BUSAK -- Bus Acknowledge. Becomes active to indicate that the CPU has complied with a BUSRQ.

- o WAIT -- Becomes active to request the CPU to extend the current memory-access or I/O cycle as long as it (the WAIT) is present. It is employed in this workstation to synchronize CPU and CRT logic during data transfers.

2.3.1.11 CPU Interrupts

The Workstation employs one interrupt mode, mode 0, which is both hardware and software selected. At power-up, both the CPU and the external hardware are set for mode 0 type interrupts. When an interrupt is generated in this mode the CPU is restarted to address 0000 HEX. If the Telecommunication option is not present the only interrupt is due to keystrokes. If the Telecommunications option is present an interrupt may also be generated by:

- o 10 ms timer
- o TXRDY (Transmitter ready)
- o RXRDY (Receiver ready)

The CPU is forced to address 0000 HEX when any interrupt is generated. When the Telecommunications option is present, interrupt priority is selected by software.

CPU interrupts must be re-enabled after each interrupt so that further interrupts can be accepted.

The CPU employs two interrupt inputs:

- o NMI -- Non-Maskable Interrupt. An NMI is an unconditional entrance to the program.

- o INT -- Interrupt. INT is the input signal for all other interrupting devices in the system that are under software control.

2.3.2 210-7544/7744 PCA

The 210-7544/7744 PCA contains MAIN MEMORY, DATA LINK and DMA CONTROL, as well as a DIAGNOSTIC PROM.

2.3.2.1 Workstation Memory (Figure 2-7)

Workstation memory is configured in three categories: Main Memory, CRT Memory, and PROM (Diagnostic) Memory.

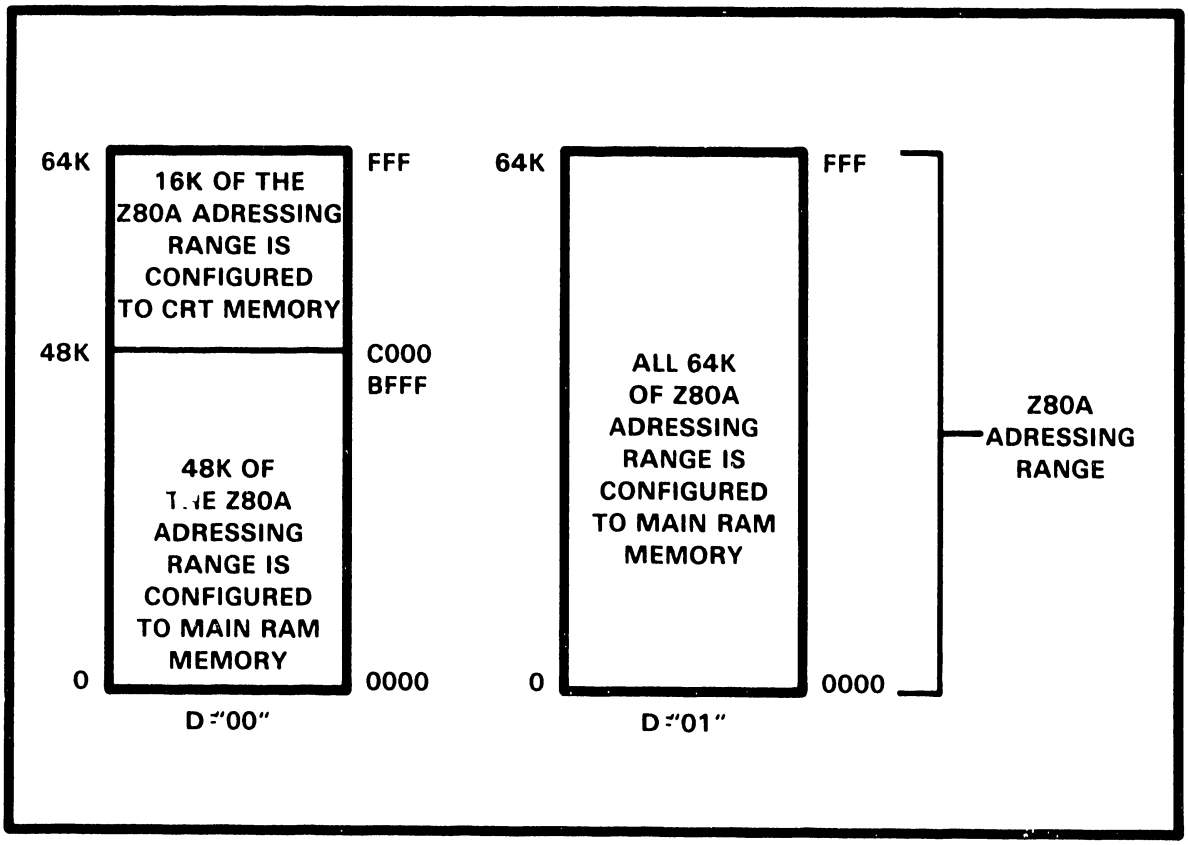

Figure 2-7. Memory Organization

o Main Memory

Four Main Memory RAM loadings are available: 16K, 32K, 48K, and 64K.

Main RAM can be accessed by both the CPU and the Data Link. (The Data Link is a DMA path.) Main RAM occupies addresses from 0 to the upper limit of the loading; the maximum is 64K. Note, however, that some master units are limited in the amount of slave memory they can address through the Data Link.

Row Address Select (RAS) and Column Address Select (CAS) logic is employed to address main memory. RAS and CAS lines enable 16-bit addresses to be processed in 8-bit, half-address form, permitting 16-bit main memory addresses to be written and read with the 8-bit Z80A CPU. RAS/CAS logic transfers high-order and low-order address bits through the same chip pins at different times.

RAS/CAS cycles are required whenever main memory is addressed. Main memory is addressed during these operations:

- o CPU instruction fetch/refresh cycle
- o CPU data read
- o CPU data write
- o DMA transfer.

A CPU instruction fetch is requested for as long as the CPU indicates that an instruction address is on the address bus. This request is delayed by one CPU clock time.

o CRT Memory

CRT Memory is discussed in Section 2.3.1.5. If selected, CRT RAM occupies addresses 48K to 64K of the Z80A's address range. This portion of memory can be addressed only by the CPU and by CRT scan logic. No DMA path can access CRT memory. The CPU writes characters that are to appear on the screen, and may read characters that are already being displayed.

Although CRT memory contains fewer than 4K display characters it requires 16K of address space. The additional addressing is needed for attribute memory and to support the row/column addressing method. CRT memory-address space is mapped into the top 16K of main memory to simplify CRT display update by the CPU. Special logic permits the top 16K of memory to be switched from CRT memory to additional main (program) memory when the workstation is used for data processing applications.

o PROM Diagnostic Memory (Used In-House Only)

PROM or Diagnostic Memory, when present, permits a power-up diagnostic and a local mode of operation to be employed with the workstation.

The three memory categories overlap. When power is applied the (64K) workstation has 48K of main memory and 16K of CRT memory.

The PROM overlays the bottom 2K of main memory. If the PROM has been selected, the bottom 2K of RAM cannot be read, although it can be written. The PROM can be selected at any time.

Both main and CRT memories have a parity bit. This bit is checked for data integrity on every read. PROM memory is not checked for parity. When a parity error is detected, the CPU stops and all characters are underlined on the CRT display. When the PROM is read, memory parity errors are cleared.

2.3.2.2 Data Link (Figure 2-8)

The data link permits the Master to transfer data at high speed between its main memory (or disk) and main memory in its peripheral subsystems. The data link residing in 5536 workstations permits high speed, bidirectional data flow between the Master Unit of each system and its 5536 workstations. In particular, the Master uses this link to load programs into workstations, store documents produced at workstations, and to feed high-speed printers.

Each workstation is connected to the Master separately, through a radial bus structure. All transmissions are controlled by the Master.

Data is transferred directly between memories using DMA logic. Data transfer is carried out in a serial, asynchronous, byte-oriented format using a half-duplex line. The transmission line itself is a balanced pair of coaxial cables operating at 4M baud. The actual data transfer rate is approximately 260K bytes per second.

o Data Link Commands

Six Data Link commands permit the Master to:

- Check Slave STATUS and ID
- Initiate Slave Operation (RESTART)
- Load Slave Memory (WRITE -- 2 commands)
- Store Slave Data (READ -- 2 commands)

STATUS and ID commands send Slave STATUS and ID to the Master on command.

RESTART commands reset the Slave CPU on command from the Master.

WRITE and READ commands may each transfer either 1 byte or 256 bytes.
One-byte commands transfer a single DMA cycle.
Two-hundred-and-fifty-six-byte commands transfer a single page of data.

Write Data (1 byte) commands the Slave to receive data (one DMA cycle) from the Master on command.

Write Byte (256 bytes) commands the Slave to receive data (one page) from the Master on command.

Read Data (1 byte) commands the Slave to send data (one DMA cycle) to the Master on command.

Read Byte (256 bytes) commands the Slave to send data (one page) to the Master on command.

The Data Link contains four logic functions:

Data Path
Timing
Line Control
Command Decode

The Data Path defines the path by which information bytes are transferred between the serial data link and the data bus, address bus, command register, or status register.

The workstation portion of the data link normally monitors the serial, half-duplex transmission line. The first "1" detected by the differential line receiver causes a timing circuit to count out the eleven-bit intervals needed for a byte transfer. When the last bit of the serial/parallel shift register has been loaded, line parity is tested, the first byte of information is loaded into a command register, and a DMA bus request is initiated. Since stray line noise may start the timing circuits, three bits in the first byte are checked for a special header character. The remaining bits can be decoded to indicate a command if and only if the header is correct.

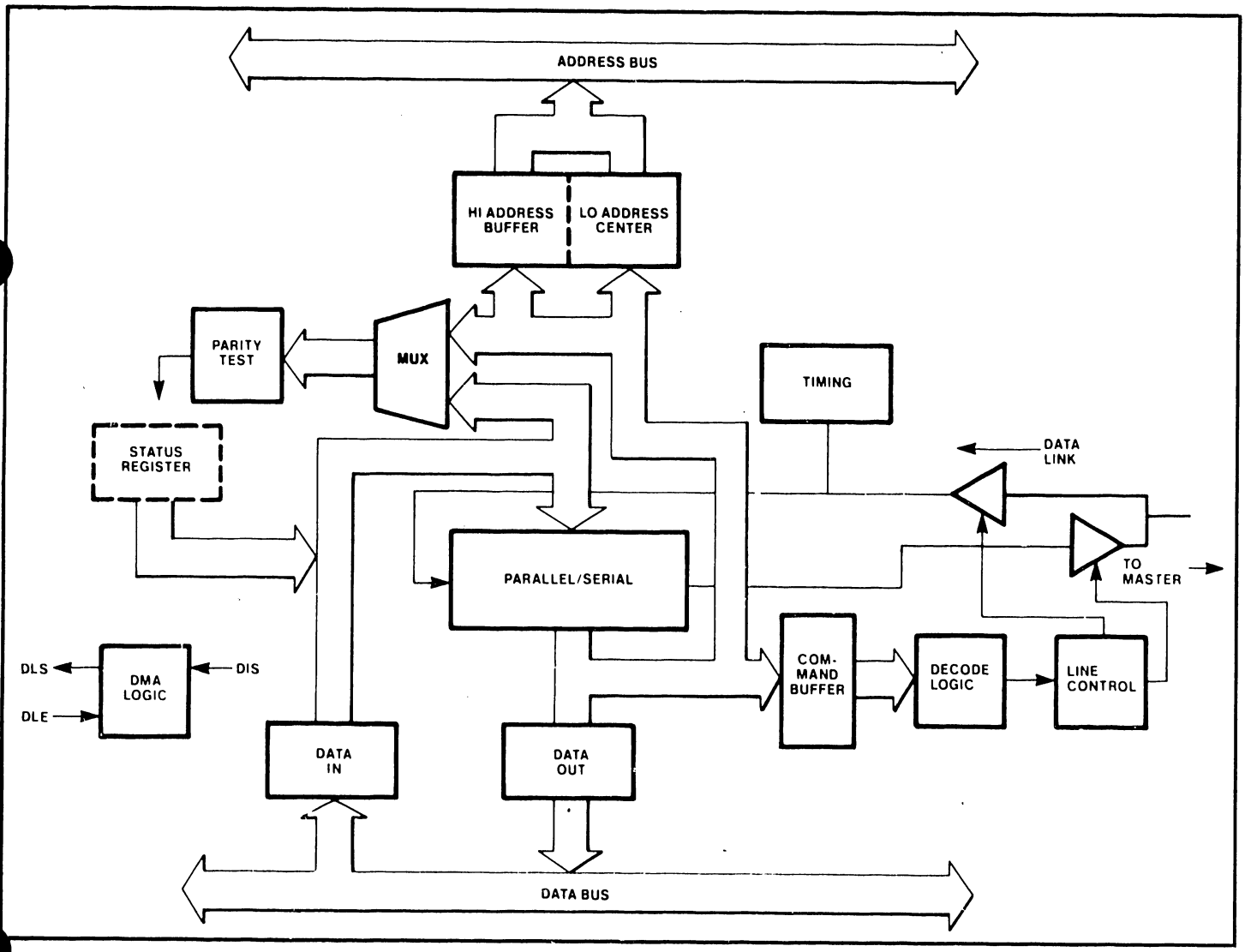

Figure 2-8. Data Link Block Diagram

After the first byte has been transmitted, data link operation depends on the decoded command. A DATA TRANSFER command (READ or WRITE) loads the next two bytes into the high- and low-address registers, respectively. The low-address register is a counter that increments the DMA byte address following each transfer. A 256-byte transfer command ends when the address counter overflows. For WRITE operations, a data byte(s) immediately follows the low half of the address. For READ operations, line-control logic must reverse the half-duplex line before data can be sent to the master. A built-in delay (8 microseconds) provides time for the line to quiet before data is transmitted.

Non-data commands (STATUS and RESTART) do not transfer an address. RESTART generates a 1.8 microsecond reset pulse to the Workstation CPU. STATUS causes a Data Link Status Word to be transmitted to the Master CPU after a line reversal.

The Master monitors each command during its execution and clears the Data Link when the command has been completed.

Timing is normally enabled to receive data. Timing logic recognizes the start bit preceding each byte and determines when the entire byte has been received. It also provides bit timing when information is transmitted to the Master. During READ and STATUS commands, timing logic clears timing during line reversal and maintains continuous timing while transmitting.

Line control ensures that the Data Link is ready to receive command inputs from the Master when the Data Link is not in use, determines that the line is quiet before reversing the half-duplex line, generates and checks line parity on each byte, and clears the Data Link both after each command and in the event of a line failure.

Line Control logic interlocks the Data Line Drivers and Receivers to ensure that the Workstation does not transmit into itself. The Line Drivers are disabled until they are required to transmit data or status to the Master during a specific command.

Command Decode decodes and validates commands from the Master after a valid command (three-bit header) has been recognized.

2.3.2.3 DMA Control

Bus Requests are generated by the Data Link when a non-processor device requires direct memory access (DMA) for a data transfer. DMA transfers typically move blocks of data between main memory and mass storage devices. DMA operations have a higher priority than CPU operations due to real-time requirements.

Before a DMA device can use the bus it must gain control of the bus from the CPU. The CPU permits it to do so by recognizing the presence of a Bus Request and disabling its own bus inputs and outputs as soon as its current machine cycle has been completed. The CPU indicates when the cycle is complete by asserting Bus Acknowledge. The DMA device now has control of the bus for as long as Bus Request remains asserted.

Since CPU bus-control logic is not available to supply data transfer timing or to initiate refresh cycles during a DMA operation, separate DMA bus timing must be provided by the DMA device. Some provision is required to ensure that refreshes occur often enough to preserve memory content.

DMA requests are accepted from the Data Link. The Data Link is given priority to reduce delays in the Master. This priority schedule allows a pending Disk Bus Request to be converted to a Data Link Transfer if the Data Link Request is received before disk transfer actually begins. Priority logic, then, effectively inhibits the unselected DMA device once DMA transfers begin.

DMA Enables permit selected devices to place DMA addresses and data onto the system bus. DMA Enables also ensure that only the selected device is allowed to control the main memory write control lines.

2.3.2.4 Diagnostic PROM

Diagnostic PROM holds special instructions for CPU operation in the maintenance mode, providing in-house service personnel with a broader range of diagnostic capability. It is not used in the field.

2.4 TELECOMMUNICATIONS OPTION

2.4.1 GENERAL OVERVIEW

Telecommunications is supported on the 5536 workstation by utilizing the Z80A microprocessor. The workstation has the ability to support a variety of asynchr ous and synchronous communication protocols when loaded with the appropriate microcode. A typical configuration is shown in Figure 2-9.

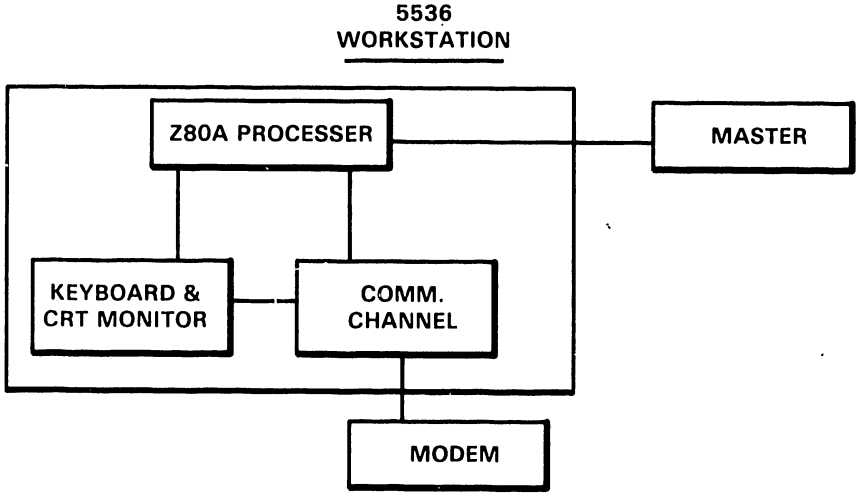

Figure 2-9. 5536 Workstation with TC Configuration

Connection of a workstation to a modem is by an RS-232 cable between the modem and the modem connector on the workstation. If the modem is supplied by the telephone company, the connection of the modem to the line is made by them (figure 2-10).

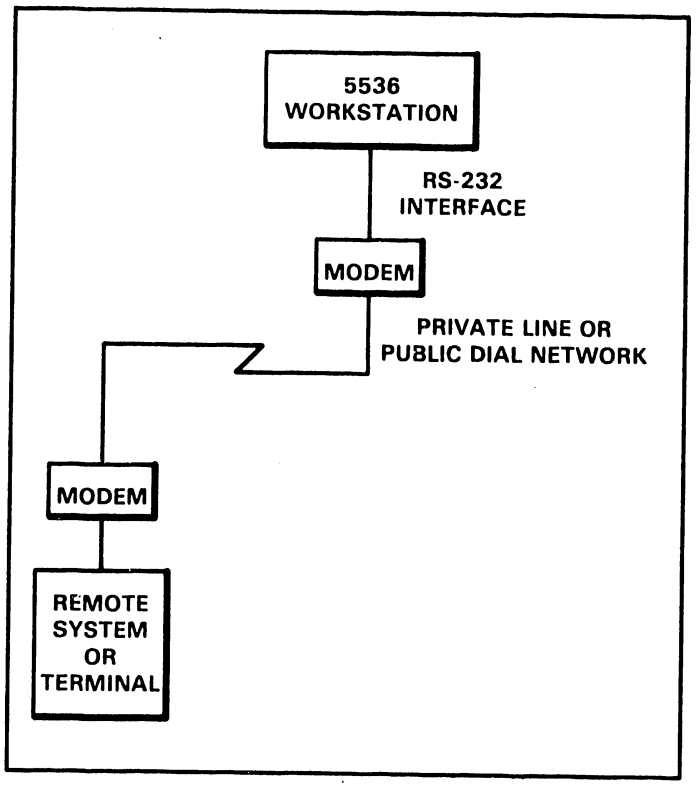

Figure 2-10 TC Connection Diagram

2.4.2 FUNCTIONAL OVERVIEW

TC logic resides on one circuit assembly, PCA 210-7541. The major logic functions are:

- o USART (Conversion)
- o Data Input/Output
- o Decoders
- o Modem Interface

These functions are connected to the CPU by the System Address Bus and the System Data Bus.

2.4.3 FUNCTIONAL DESCRIPTION

This section provides descriptions of major TC logical functions. Figure 2-11 shows the major blocks on the PCA.

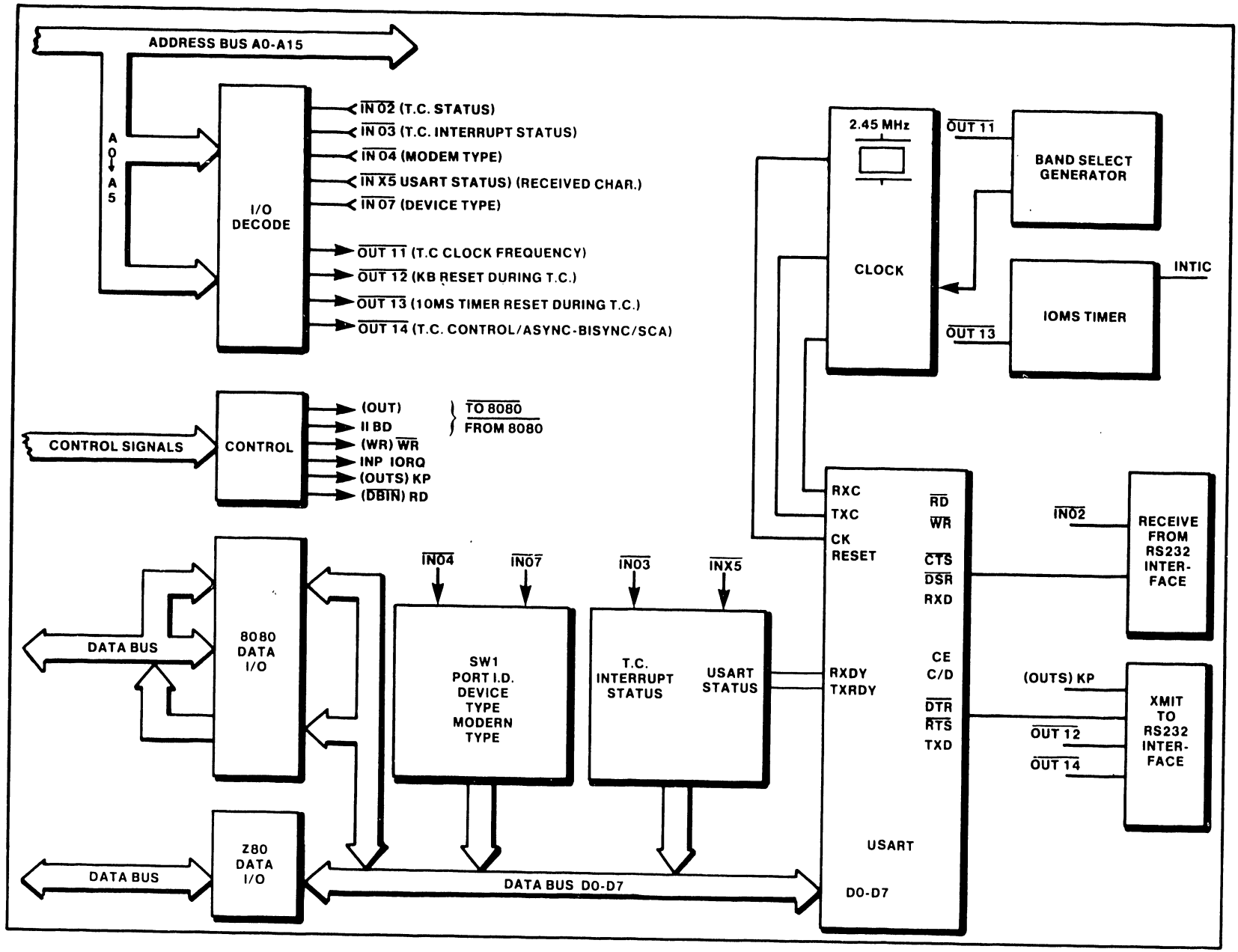

Figure 2-11. 210-7541 PCA Block Diagram

2.4.3.1 USART

THE 8251A USART (Universal Synchronous/Asynchronous Receiver/Transmitter) is programmed by the CPU to operate using 2780, 3780, WPS, TTY, or 2741 protocols. When the desired protocol has been selected, the CPU sends out a set of control words to the USART that program BAUD RATE, CHARACTER LENGTH, NUMBER OF STOP BITS, SYNCHRONOUS or ASYNCHRONOUS OPERATION and EVEN/ODD/OFF/MARK/SPACE PARITY. The USART then accepts data characters from the CPU in parallel format and then converts them into a continuous serial data stream for transmission. Simultaneously, it can receive serial data streams and convert them into parallel data characters for the CPU.

Internal device timing for the USART is provided by a 2.45 MHz clock circuit. Transmit and receive clocks are also derived from this circuit as an output of L13, Pin 9.

2.4.3.2 Input/Output

During a transmit operation, data is received from the CPU in parallel format by a bi-directional driver (Z80 configuration) or an LS240 Receiver (8080 configuration). The data (D0-D7) is then gated into the USART where it is converted into serial stream format, gated to the transmit driver and sent to the 25-pin RS-232-C connector interface.

During a receive operation, data is received by the RS-232 receive circuitry in serial stream format and gated into the USART where it is converted into parallel format. The data is then gated through either a bi-directional driver (Z80 configuration) or 368 type drivers (8080 configuration) to the CPU Data Bus.

2.4.3.3 "In"/"Out" Decoding

The CPU uses "IN" and "OUT" command instructions to send or receive control or status information to or from the TC PCA. These instructions are described individually in the following sections. When setting control bits and reading status bits, a logical ON condition is represented by a "1" bit, and a logical OFF condition is represented by a "0" bit.

Read Modem Status Signals

Instruction IN X '02'

BIT	MEANING
D0	RLS
D1	SRL
D2	DSR
D3	CTS
D4	RD

The status signals from the modem interface are sensed:

- o RD Received Data (Polarity is inverted)
- o CTS Clear to Send
- o DSR Data Set Ready
- o SRL Secondary Received Line Signal Detector
- o RLS Received Line Signal Detector

Read Interrupt Status

Instruction IN X '03'

BIT	MEANING
D0	KEY
D1	TXRDY
D2	RXRDY
D3	10 MS

The status signals from the modem interface are sensed:

- o KEY Key Stroke Interrupt
- o RXRDY Receiver Interrupt
- o TXRDY Transmitter Interrupt
- o 10 MS 10 Millisecond Timer Interrupt

Read Telecommunications Port ID Switch

Instruction IN X '04' Refer to TC switch settings in Chapter 4, section 4.5.1.

Input Received Character from USART

Instruction IN X '15'

A received character is input from the USART by the Input Received Character instruction. This clears the receiver ready condition and the interrupt condition which it causes. If a transmission character of fewer than 8 bits is being used, the character to be transmitted is right adjusted in the byte input into the accumulator.

Read USART Status

Instruction IN X '35'

BIT	MEANING
D0	TxR
D1	RxR
D2	TxE
D3	PE
D4	OE
D5	FE
D6	BRKD
D7	DSR

The USART status register is read:

- o DSR Data Set Ready
- o BRKD Break Detect
- o FE Receiver Framing Error (applicable to asynchronous transmission only)
- o OE Receiver Overrun Error
- o PE Receiver Parity Error
- o TxE Transmitter Empty
- o RxR Receiver Ready (this bit generates an interrupt)
- o TxR Transmitter Ready (This bit generates an interrupt. If the transmitter is not enabled the interrupt wil not be generated, but TxR will be seen as set when read in from the USART status register).

Set Internal Clock Rate

Instruction OUT X '11'

The bits/sec rate of the USART's internal clock is set. When asynchronous transmission is employed, the clock rate divider in the USART Mode Word must also be set.

Note that when the clock is used to provide a synchronous clock signal by driving Secondary Request to Send and using a jumper plug to connect it back to the USART and concurrently to a directly connected computer or terminal, the Baud Rate Select Code is different from that used for asynchronous transmission.

Clear Keyboard Interrupt

Instruction OUT X '12' The keyboard interrupt request is cleared.

Clear Timer Interrupt

Instruction OUT X '13' The interval timer interrupt request is cleared.

Set Secondary Request to Send and Clock Mode

Instruction OUT X '14'

BIT	MEANING
D0	SAC
D4	SRS

The modem control signal Secondary Request to Send (SRS) and the Select Asynchronous Clock bit (SAC) are set at the power up. The source of transmission timing for the USART is selected by SAC = 0 as the modem signals, Transmit Signal Element Timing and Receive Signal Element Timing. Otherwise the USART's internal clock is selected as the timing source. When the modem signals are selected as the timing source, the internal clock drives the modem interface signal, Secondary Request to Send. This permits asynchronous transmission between the workstation and another system through a direct cable connection when the appropriate modem connector jumper plug is installed.

Disable Telecommunications Interrupts

Instruction OUT X '16'

The interval timer, transmitter, and receiver interrupts are disabled. The keyboard interrupt is always enabled and is not affected by this instruction. When the telecommunications is initially powered on, the telecommunications interrupts are disabled.

Enable Telecommunications Interrupts

Instruction OUT X '17'

The interval timer, transmitter, and receiver interrupts are enabled.

Clock Rate	Async. Clock Rate Select Code	USART Clock Divider	Sync. Clock Rate Select Code
50	X'40	1	
75	X'80'	1	
100	X'A0'	1	
110	X'A9'	1	
134.5	X'B9'	1	
150	X'C0'	1	
200	X'D0'	1	
600	X'F0'	1	
1200	X'F8'	1	
2400	X'F0'	0	X'01'
4800	X'F8'	0	X'80'
9600	X'FC'	0	X'C0'

Output Character to USART for Transmission

Instruction OUT X '15'

A character to be transmitted is output to the USART. This clears the transmitter ready condition and the interrupt condition which it causes. If a transmission character of fewer than 8 bits is being used, the character to be transmitted is assumed to be right adjusted in the byte output from the accumulator.

Set USART Mode/Command Data

Instruction OUT X '35'

The interpretation of the byte of data output by the SET USART Mode/Command instruction is determined by the state of the USART. Following a reset of the USART, which can be caused by either a power-on condition or a bit in the Command Word, the first byte output by this instruction is a Mode Word. If the Mode Word selected asynchronous mode, all bytes subsequently output by the instruction (unless they specify an internal reset) are Command Words. If the Mode Word selected synchronous mode, the next one or two bytes, as determined by the Mode Word, output by the instruction define the synchronization pattern. All bytes subsequently output by the instruction are Command Words.

Synchronous Mode Word		Asynchronous Mode Word	
D0	0	D0	CRD
D1	0	D1	1
D2	L1	D2	L1
D3	L2	D3	L2
D4	PEN	D4	PEN
D5	EP	D5	EP
D6	0	D6	S1
D7	SCS	D7	S2

SCS Single Character Synchronization (Double if not set)
EP Even Parity Generate/Check (if PEN set)
PEN Parity Enable
L2,L1 Transmission Character Length (in bits):
00 = 5; 01 = 6; 10 = 7; 11 = 8
S2,S1 Number of Stop Bits: 00 = Invalid; 01 = 1; 10 = 1-1/2; 11 = 2
CRD Clock Rate Divider (see description of the command which sets the clock rate for values to use)

Command Word

D0 TxE
D1 DTR
D2 RxE
D3 BRK
D4 ER
D5 RTS
D6 IR
D7 EH

EH Enter Hunt Mode (applicable to synchronous only)
IR Internal Rest USART
RTS Request to Send Modem Signal
ER Error Reset of Framing, Overrun, and Parity Error Status
BRK Send Break on Transmit Data Signal
(Break lasts until BRK is cleared)
RxE Receive Enable
DTR Data Terminal Read Modem Signal
TxE Transmit Enable

The USART chip has several limitations which must be observed.

- The status of the USART will not be valid until 28 clock cycles from an event affecting the status (11.4 microseconds).
- The TXRDY pin will not be valid for 8 clock cycles after last transmission (3.25 microseconds).
- The RXRDY pin will not be valid for up to 24 clock cycles after the last received character. (9.77 microseconds).
- Note also that the main USART clock is independent of the system clock and has a fixed frequency of 2.4576 MHZ.

2.4.4.3 Modem Interface

The workstation contains a 25-pin connector EIA RS-232-C.

Control Signal	Data Signal	Applied Voltage	Detected Voltage
ON	SPACE (0)	+8	+5 to + 15
OFF	MARK (1)	-8	-5 to - 15

The pin assignments of the signals are as follows:

Pin		EIA	Source	Signal Description
1	*	AA		Protective Ground
2	*	BA	W.S.	Transmitted Data
3	*	BB	modem	Received Data
4	*	CA	W.S.	Request to Send
5	*	CB	modem	Clear to Send
6	*	CC	modem	Data Set Ready
7	*	AB		Signal Ground
8	*	CF	modem	Received Line Signal Detector
9				
10	*			
11	*	SCA	W.S.	Secondary Request to Send
12	*	SCF	modem	Secondary Received Line Signal Detector
13		SCB	modem	Secondary Clear to Send
14		SBA	W.S.	Secondary Transmit Data
15	*	DB	modem	Transmit Signal Element Timing
16		SBB	modem	Secondary Receive Data
17	*	DD	modem	Receiver Signal Element Timing
18			W.S.	Select Frequency Groups
19		SCA	W.S.	Secondary Request to Send
20	*	CD	W.S.	Data Terminal Ready
21		CG	modem	Signal Quality Detector
22		CE	modem	Ring Indicator
23		CH/C	WS./modem	Data Signalling Rate Selector
24		DI	W.S.	Transmit Signal Element Timing
25				Unassigned

* Denotes signals used by the TC workstation

CHAPTER 3 OPERATION

CHAPTER 3
OPERATION

3.1 INDICATORS AND CONTROLS

The adjustment controls for the 5536 workstations are located on the front and rear of the cabinet. The function and location of each control is defined below.

Front of workstation - on front panel (figure 3-1)

BRIGHTNESS	left	(Brightness can also be adjusted with INTENSITY GAIN, on top of PCA 210-7545.)
CONTRAST	right	

Rear of workstation - next to ac line (figure 3-2)

SPEAKER (Tone)	left
CLICKER	right

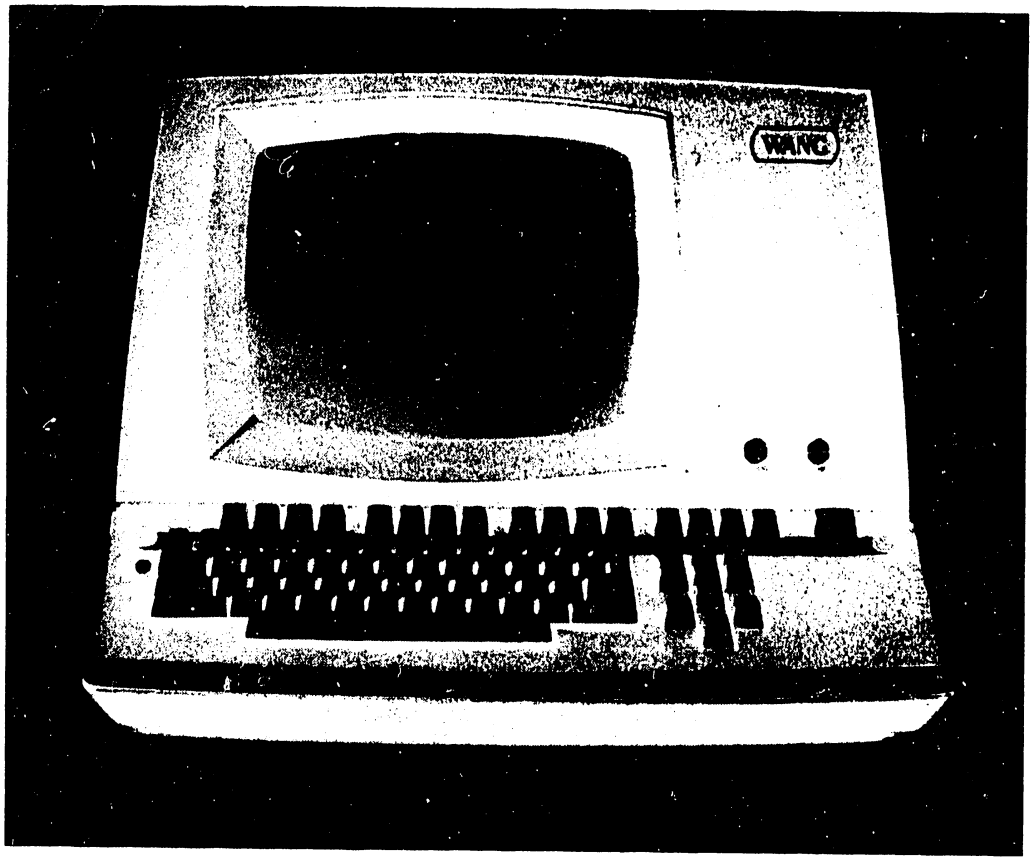

Figure 3-1. 5536 Workstation (Front View)

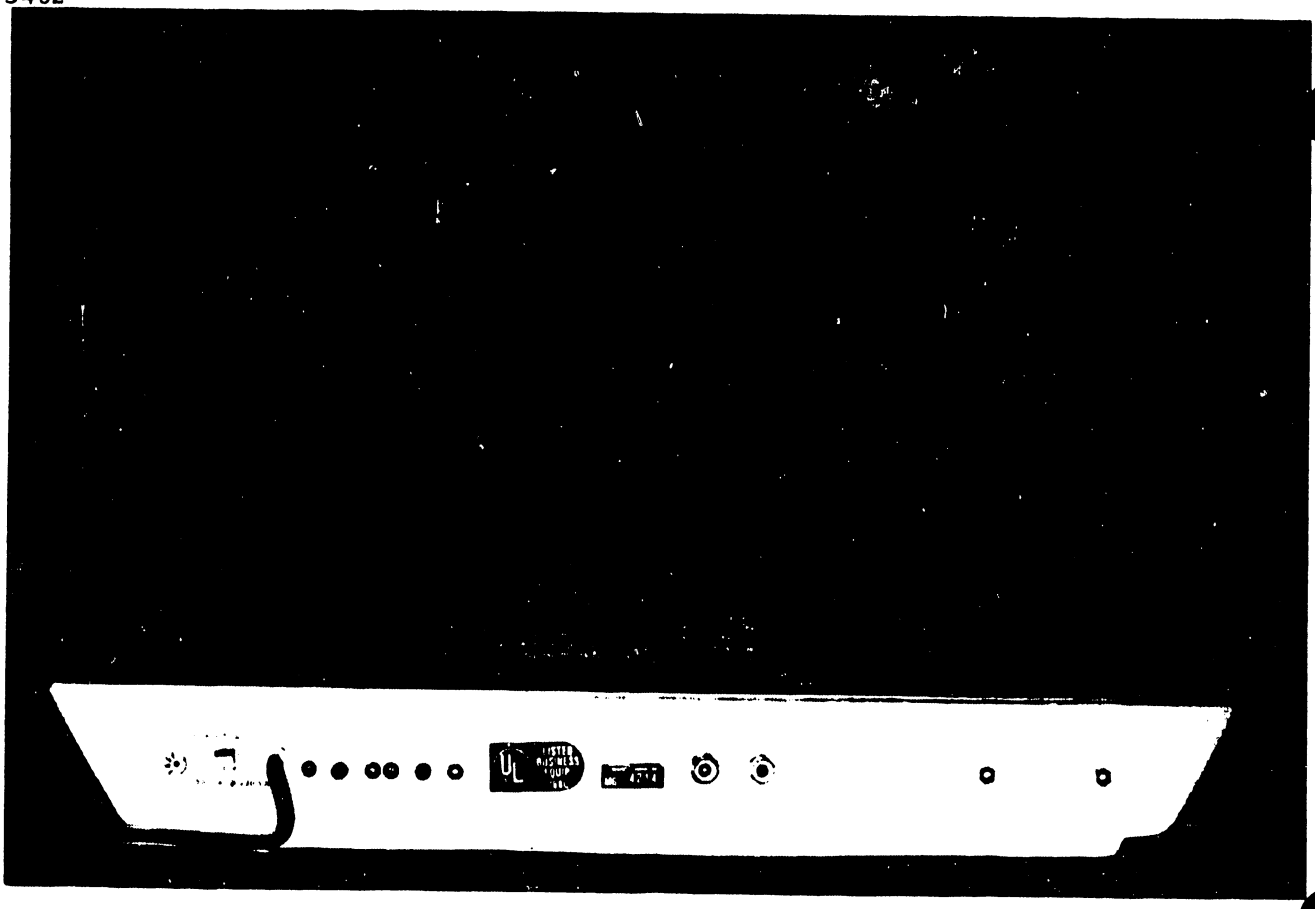

Figure 3-2. 5536 Workstation (Rear View)

3.2 KEYBOARD

The 5536 workstation keyboard features the conventional typewriter format, an optional numeric keypad, cursor control and the editing and special function keys normally associated with WANG Word Processing Systems (figure 3-3). The following paragraphs describe the actions associated with each group of keys. For convenience of discussion, the keyboard has been divided into four zones as shown in figure 3-3.

Zone 1 - Typewriter Keyboard -- Similar to a standard typewriter, this zone contains the alphanumeric characters, the special purpose characters such as @ # $ ¢ and the arithmetic operators "+ - * / = ". Additional keys TAB, GL, RETURN and SHIFT keys perform the following functions:

- TAB sets the format line zone and advances the cursor through successive zones on the screen to facilitate table creation.

- GL (glossary) is a useful function in Word Processing whereby repeatedly used text may be created once, stored on disk and retrieved again with two keystrokes; GL followed by the glossary number.

- RETURN terminates the present text line and repositions the cursor at the beginning of the next line.

- SHIFT accesses the uppercase alphabetic characters as well special purpose characters located on the numeric keys. The 5536 also includes a Caps Lock feature for series of capitalized characters. Caps Lock is activated by pressing the LOCK key.

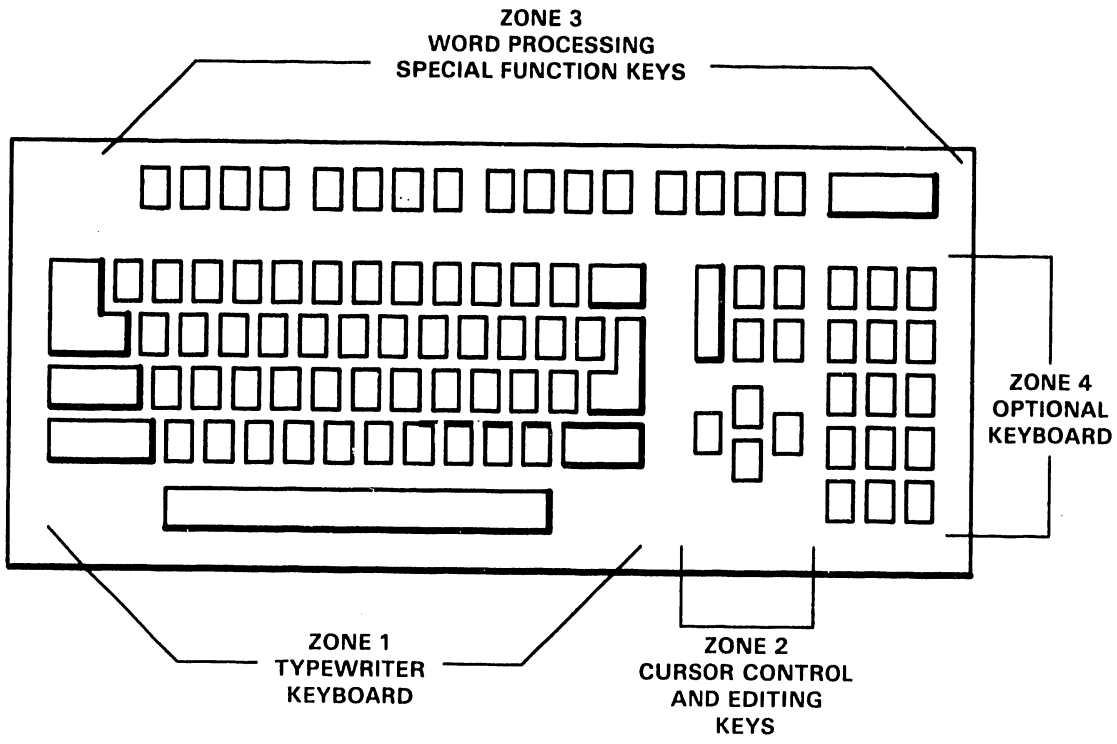

NOTE

EXPANDED (INTERNATIONAL) KEYBOARDS HAVE 4 ADDITIONAL KEYS.

Figure 3-3 5536 Keyboard

Zone 2 - Cursor Control and Editing Keys -- This zone contains editing keys (INSERT and DELETE), location keys (NEXT SCRN and PREV SCRN), and cursor control keys (movement of cursor in indicated direction: up, down, right, and left).

Zone 3 - Word Processing/Special Function Keys -- Across the top of the keyboard are 16 Word Processing/Special Function keys. When using the word processing software, the Word Processing Function keys simplify document creation and revision. For example, the CENTER key automatically centers a line of text, the MOVE key allows any amount of text to be moved within a document, and the REPLC key allows a character-defined sequence to be replaced with another within a document.

Zone 4 - Numeric Keypad (Optional) -- The numeric zone is designed like a standard 10-key numeric pad for rapid entry of numeric characters. The numeric keys are grouped here for convenience. Digits may be entered by using the numeric keys in either the numeric or the alphanumeric zone.

Other features include automatic or on demand underlining and character accenting on non-English versions of the keyboard. All keys on the keyboard will repeat if held down. The microprocessor in the workstation automatically adjusts the repeat key rate according to the rate at which characters are being echoed to the CRT. The keyboard clicker sounds each time the repeated character is transmitted. Thus, both aural and visual evidence of the repeated character are given to the user. The repeating key is particularly useful for moving the cursor when editing.

Special features of the 5536 keyboard include:

- Keyboard Clicker -- The clicker provides an audio response when a key is sufficiently pressed. The volume of the keyboard clicker may be adjusted.

- N-key Rollover -- This feature permits a new key to be pressed and output to the workstation while a previous key is still being held down. This process can continue for any number of keys; each new key pressed takes precedence over any keys already held down. The N-key rollover feature helps eliminate errors during high-speed typing.

- Workstation Alarm -- The alarm provides audio feedback to indicate the occurrence of errors or special conditions, e.g., pressing an undefined special function key, typing beyond a specified field, displaying an error message. The volume of this audio alarm may also be adjusted.

3.3 NORMAL OPERATION

Turn the workstation power ON and verify that the BRIGHTNESS and CONTRAST controls function correctly. Refer to the applicable WP or OIS operator guide; verify that all keys and special keys produce the correct results. Run applicable diagnostics as listed in section 1.3.1.

If the workstation fails during normal operational checkout, refer to chapter 8 for troubleshooting procedures.

3.4 TELECOMMUNICATIONS OPERATION

Telecommunications operation is standard, as described in PSN 729-0689: TC Software Utility Option.

CHAPTER 4

INSTAL-LATION

CHAPTER 4
INSTALLATION

This section contains the information necessary to unpack and install the 5536 workstation.

4.1 INCOMING INSPECTION

When the equipment arrives, immediately locate the packing slip and note the work order number. Verify the equipment model and serial number as listed on the packing slip.

Before opening the container, inspect it carefully for signs of damage (crushed edges, puncture holes, tears, etc.). Should damage be noted, promptly file a claim with the carrier and notify the factory:

WLI DISTRIBUTION CENTER
Department #90
Quality Assurance Department
Tewksbury, MA 01876

State the nature and extent of damage and make arrangements for replacement equipment, if necessary. Be certain to include this information:

WORK ORDER # _____
CUSTOMER NAME _____
CUSTOMER # _____
MODEL # _____
SERIAL # _____

4.2 UNPACKING

5536 workstations are packaged in a single cardboard container with special packaging material for protection during shipping. Circuit boards and other components are installed at the factory.

4.3 WORKSTATION INSPECTION

Remove the workstation cover as follows:

- Remove the three phillips screws located under the plastic strip on the keyboard and remove the keyboard plate.
- Remove one phillips screw from each side of the workstation near the lower edge of the cover.
- Lift the cover up and away from the workstation; take care not to hit or nick the CRT, or strain the brightness/contrast wires.
- Remove the brightness/contrast wires from the clamp on the side of the cover. Lay the cover on its side next to the workstation.

- Perform a careful internal inspection of the unit. Look for broken or shifted boards or other components, and wiring, screws, or hardware that might have loosened during shipment. Ensure that no dirt or other debris exists on the boards or other electrical connections. Carefully examine the fan and ensure that the blades turn freely. A MALFUNCTIONING FAN MAY CAUSE OVERHEATING, SERIOUSLY DAMAGING THIS EQUIPMENT.

4.4 INSTALLATION

This section describes workstation installation procedures.

4.4.1 INITIAL POWER-UP

- Locate the POWER switch on the rear panel of the CRT unit and ensure that the switch is in the OFF position.

- Check the serial tag attached to the workstation power cord. Set the voltage select switch on the power supply to the appropriate position (115 or 230; figure 4-1) and ensure that switch 2 on the 210-7545 PCA is configured correctly (figure 4-4).

- Insert the workstation AC power plug into an appropriate outlet. Turn the POWER switch ON.

- Refer to chapter 5 to make the indicated voltage checks. Adjust the voltages if necessary.

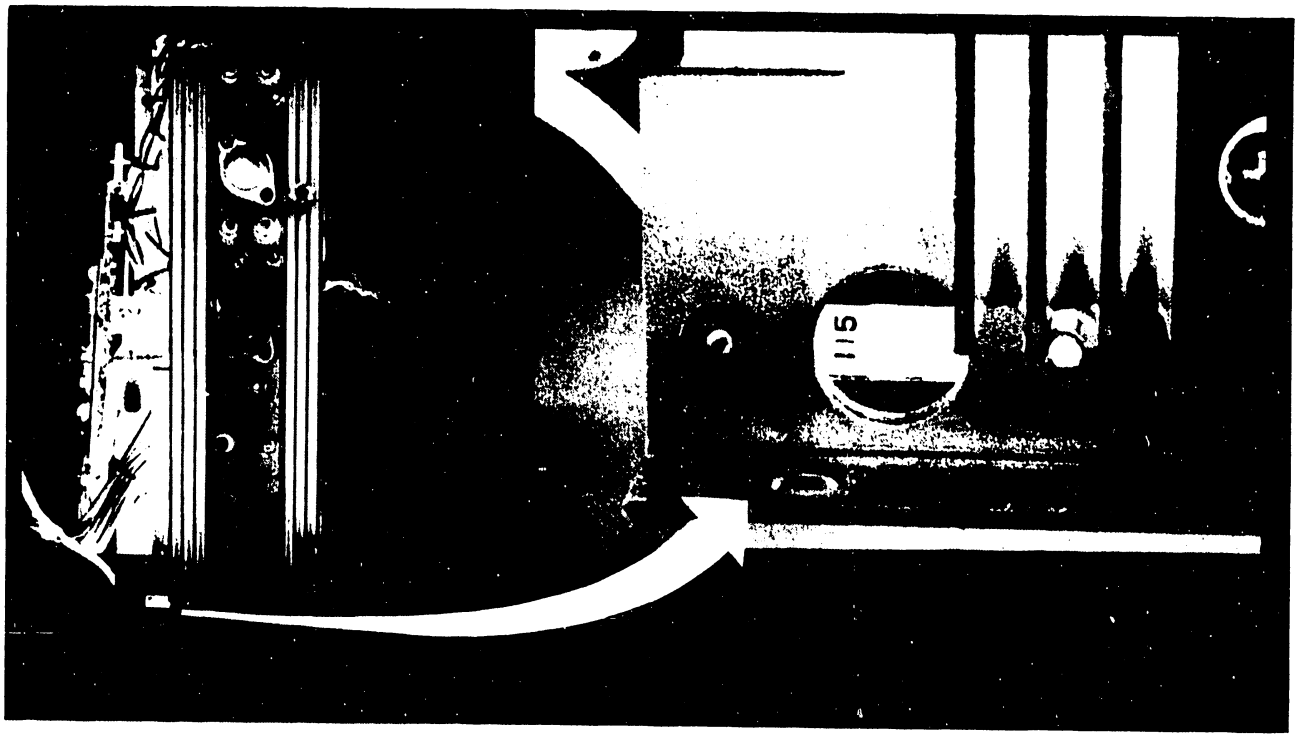

Figure 4-1. 115/230 Switch Location

4.4.2 CABLE INTERCONNECTIONS

Turn the workstation power OFF. Refer to figure 4-2 to connect the cable BNC/TNC cable between the BNC/TNC connectors on the rear panel of the workstation CRT unit, and the BNC/TNC connectors on the rear panel of the system master unit.

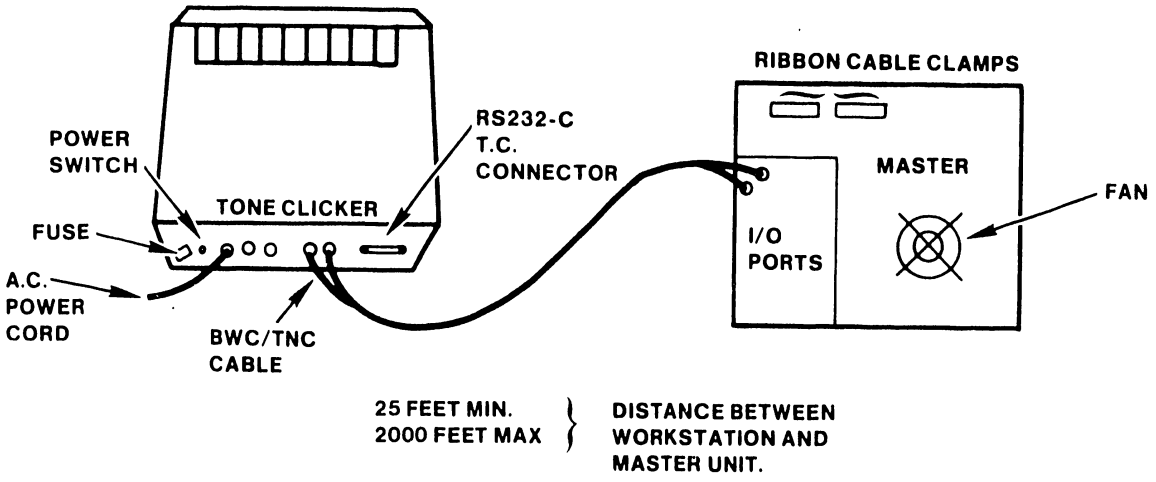

Figure 4-2. Workstation Cable Interconnections

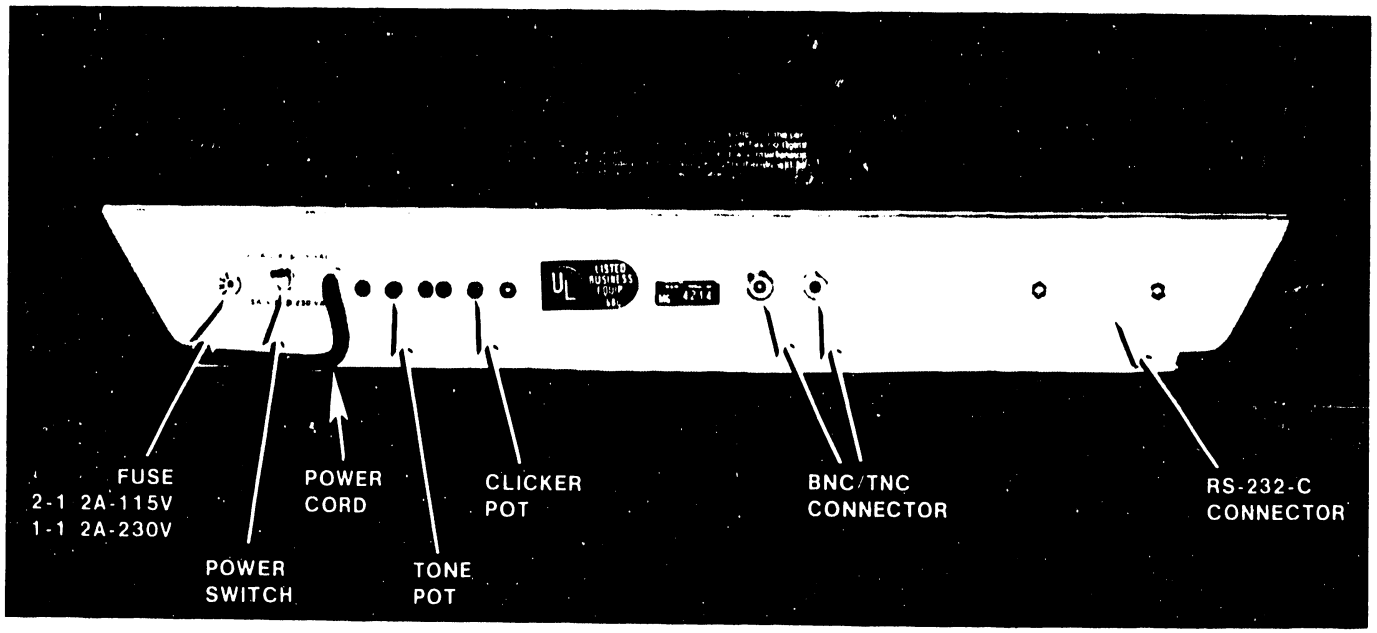

Figure 4-3. Workstation Rear Panel

4.4.3 SWITCH SETTINGS

- The CPU/CRT PCA (210-7545-2) has two DIP type switches, labeled SW1 and SW2. SW1 is the scan select switch described in section 4.4.1. SW2 is the device type switch. Set the switches for the appropriate application as shown in figure 4-4.

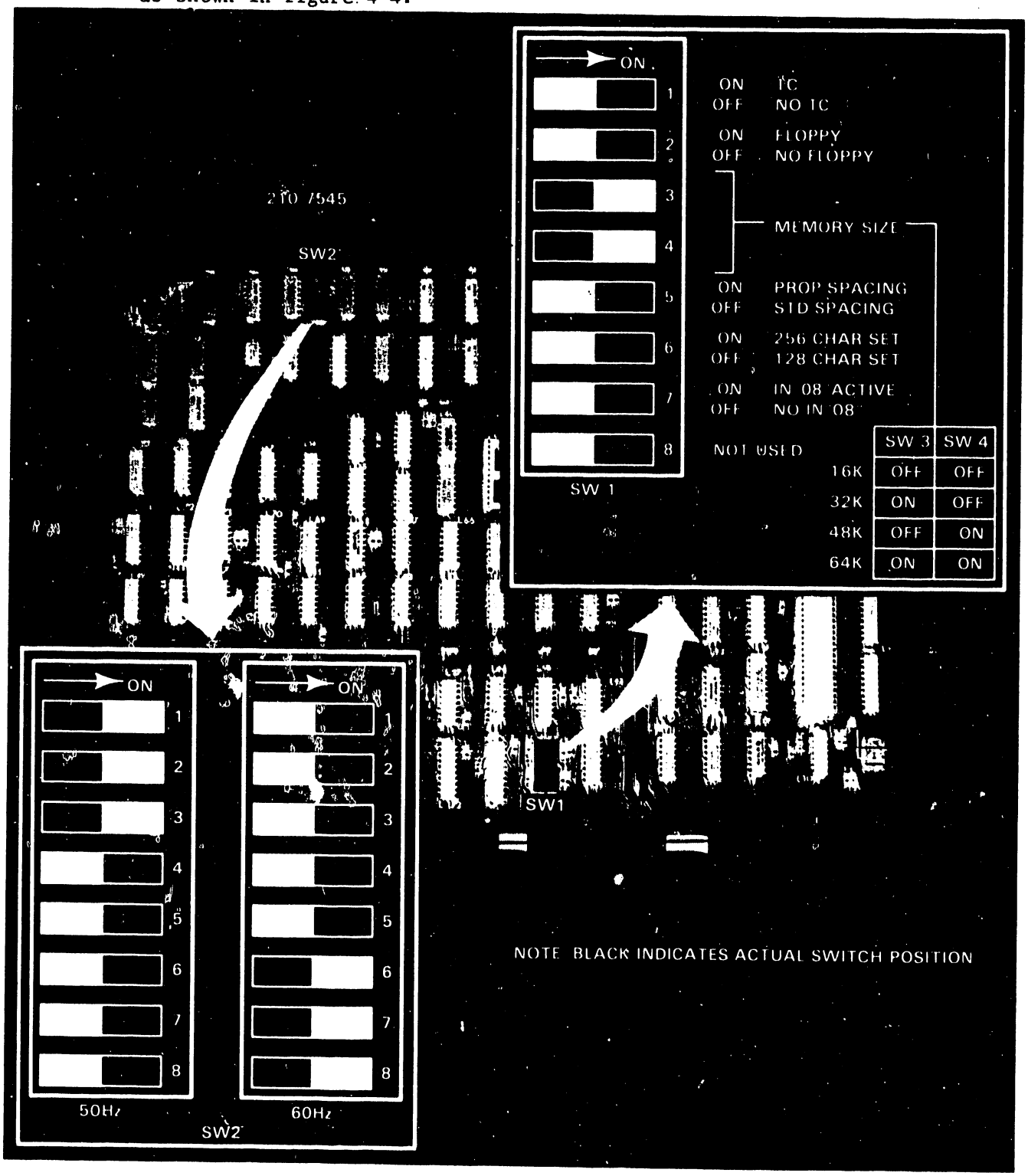

Figure 4-4. 210-7545 Switch Settings

- The Data Link/Memory PCA (210-7544/7744) has one DIP labeled SW1 (L107). The status of this switch is read by the system master unit whenever it issues an IN '07' command. The switch settings determine the type of system (WP or OIS) that the workstation is attached to. Set the switches for the appropriate application as shown in figure 4-5.

- Additional information concerning the TC option is located in section 4.5 at the end of this chapter.

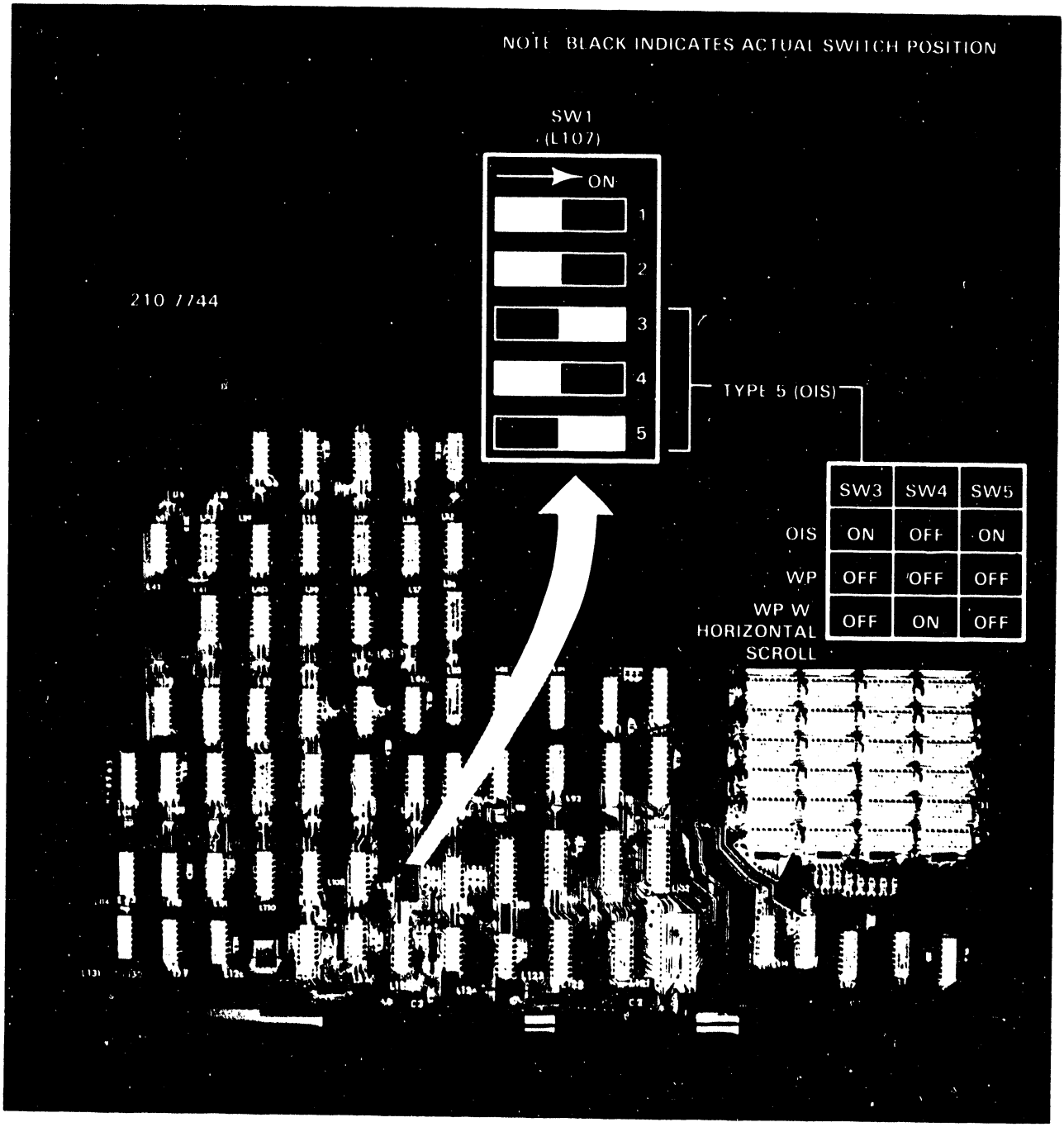

Figure 4-5. 210-7744 Switch Settings

4.4.4 INITIAL OPERATIONAL CHECK-OUT

- Turn both the master and workstation POWER switches ON. The workstation CRT raster should appear after about thirty seconds, along with the workstation main menu. Should the menu not appear, adjust the BRIGHTNESS and CONTRAST controls on the front panel of the workstation (figure 4-5).

NOTE

Should you encounter difficulty obtaining a raster and/or menu, refer to Chapter 8 of this manual for troubleshooting procedures.

- Use the diagnostics listed in section 1.3.1 to check the ability of the workstation to operate properly.

- Replace the cover.

CAUTION

When replacing the cover, don't forget to connect the fan power cable and ground wire.

4.5 TELECOMMUNICATION OPTION OPERATION

4.5.1 SWITCH SETTINGS

The 210-7541 PCA has one DIP labeled SW1. The switches on the DIP are used to address the TC device. These addresses should be even values from 2 thru 22 (decimal), where switch 1 is the least significant bit and switch 5 is the most significant bit. Figure 4-6 shows the switch settings for the first TC workstation on a line with a diagram showing the relationship between the switch and its corresponding binary and decimal values. Figure 4-6 should be used as an aid in setting the switches for the remaining TC workstations on a line.

Other workstations with TC use the following format: the switches are set in binary for even line numbers; the second workstation switches will be set to binary 4; the third to binary 6 and the last to binary 32.

4.5.2 INSTALLATION

If the workstation has been ordered with the telecommunications (TC) option, a 210-7541 PCA will have been installed and tested at the factory.

- Connect the TC cable between the TC connector on the rear of the workstation (figure 4-4), and to the appropriate modem.

- Set the TC option switch on the 210-7545 PCA (figure 4-4).

- Set the switches on the 210-7541 PCA as described in section 4.5.1.

- Ensure that the proper software has been loaded into the system.

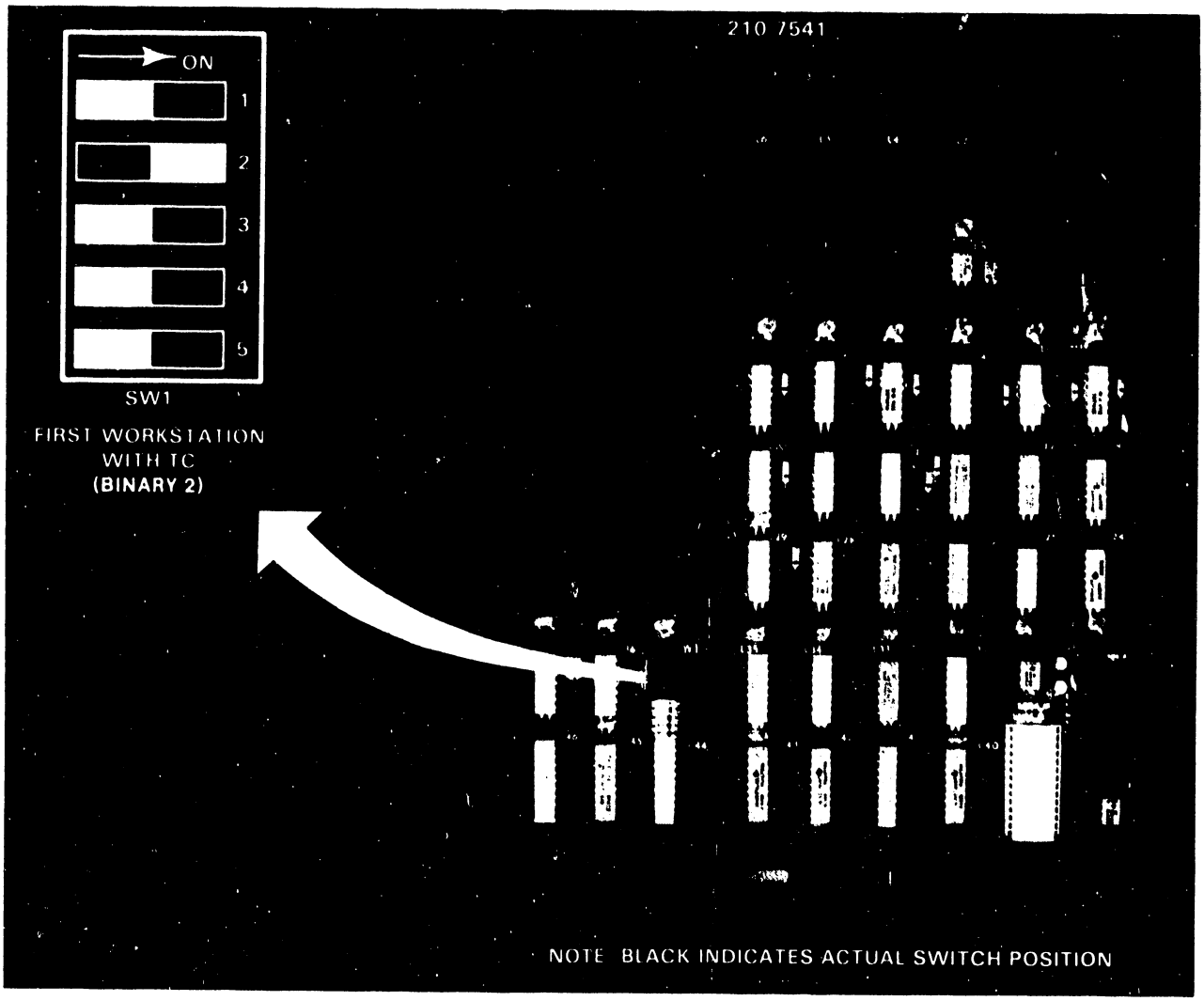

Figure 4-6. Telecommunications - 210-7541 Switch Settings

4.5.3 ACCESSORY ITEMS

4.5.3.1 Cables

Modem Cable: A 25-conductor cable with 25-pin (RS-232-C) male connectors on each end for connection of the workstation to a modem.

Direct Connection Jumper (Null Modem): To connect the workstation with another computer or terminal device in physical proximity to the workstation, this jumper renders the use of modems unnecessary. A normal modem cable may be used between the workstation and the computer/terminal/word processor.

CHAPTER 5

PREVENTIVE/ CORRECTIVE MAINTENANCE & TROUBLESHOOTING

CHAPTER 5
PREVENTIVE AND CORRECTIVE MAINTENANCE

5.1 PREVENTIVE MAINTENANCE

This section describes routine maintenance for the 5536 Workstations.

5.1.1 GENERAL

Preventive Maintenance should be performed on a regular basis to help prevent workstation equipment failures. The suggested plan for the performance of preventive maintenance follows.

5.1.1.1 Semi-Annually (Quarterly for Industrial Environments) or during an Unscheduled Trouble Call

Cleaning: Remove power from the workstation and clean as follows.

- o Dust keyboard with a soft-bristled brush.
- o Clean the CRT screen, using a good quality glass cleaner and soft, lint-free cloth.
- o Wipe exterior of workstation, using a damp lint-free cloth.
- o Clean connectors with a soft eraser.

Checks and Ajdustments: Apply power to the workstation and proceed as follows.

- o Check the workstation power supply voltages, as described in section 5..2.1.1, and adjust as required.
- o Check the CRT display voltages, as described in section 5.2.1.2 and adjust as required.
- o Check for proper character display. Perform the Video Display Alignment Procedure (5.2.1.3) if required.

Diagnostics: Run applicable diagnostics (section 1.3.1) to verify proper workstation operation.

5.1.1.2 Annually (Semi-Annually for Industrial Environments)

Cables and Connectors: Check all cables and connectors for proper seating. Loose or damaged connectors should be repaired or replaced.

Switch Settings: Check all switches for proper setting and correct if required. Switch setting information is located in Chapter 2 of this manual.

5.1.2 WORKSTATION CHECKOUT

To ensure proper operation of the workstation, run the workstation diagnostics listed in section 1.3.1 of this manual after performing preventive maintenance procedures.

5.2 CORRECTIVE MAINTENANCE

This section describes repair techniques for the 5536 workstation.

5.2.1 GENERAL MAINTENANCE

NOTE

The labeled test points are located at the top right corner of the component side of PCA 210-7544/7744.

5.2.1.1 Power Supply Voltage Checks

Using a digital voltmeter, check the test points on PCA 210-7744 for +5 V, -5 V, and +12 V (figure 5-1), and on PCA 210-7656 or the cinch connector for -12 V (figure 5-2). Adjust the trimpots on regulator PCA 210-7656 (figure 5-2) if necessary. Use pin R for ±0V reference. The power supply voltages should be within the ranges:

Adjust	Voltage	Tolerances	Ripple
R5	+5V	+4.9V to +5.1V	75mV p-p
R35	-5V	-4.9V to -5.1V	75mV p-p
R16	+12V	+11.8V to +12.2V	75mV p-p
R24	-12V	-11.8V to -12.2V	75mV p-p

NOTE

Test point A is the heavy etch located at the upper end (furthest from the board connector) of resistor R7 (33 ohm, 1W).

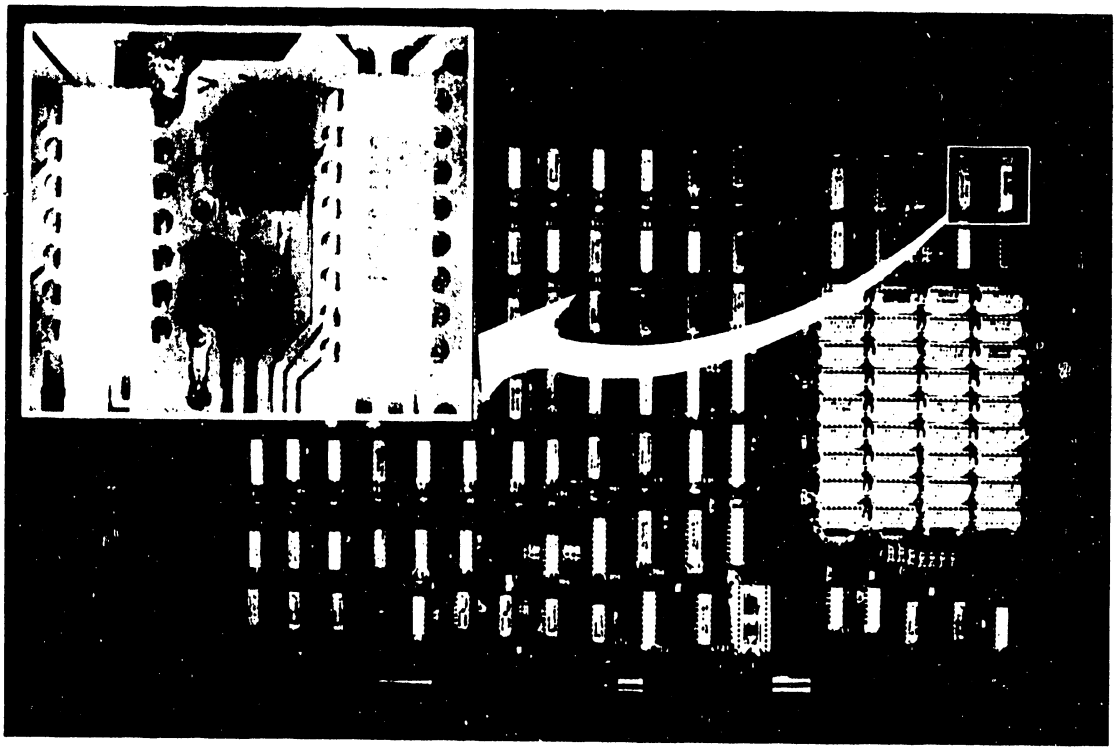

Figure 5-1. 210-7744 Voltage Test Points

5.2.1.2 CRT Display Voltage Checks

- o Adjust the +12 V regulated voltage to +12 V ± 0.2 V on PCA 210-7656 (figure 5-2). Use a DVM to check test point A on PCA 210-7456 with pin D, E, or F on the board (figure 5-3) and L1-1 as ± 0V ground references.

CAUTION

Use a non-metallic standard tuning wand when adjusting dynamic focus coil Z1.

- o Using pin M as a test point (figure 5-3), adjust the Dynamic Focus Coil (Z1) to register an amplitude of 250V AC peak-to-peak on an oscilloscope.

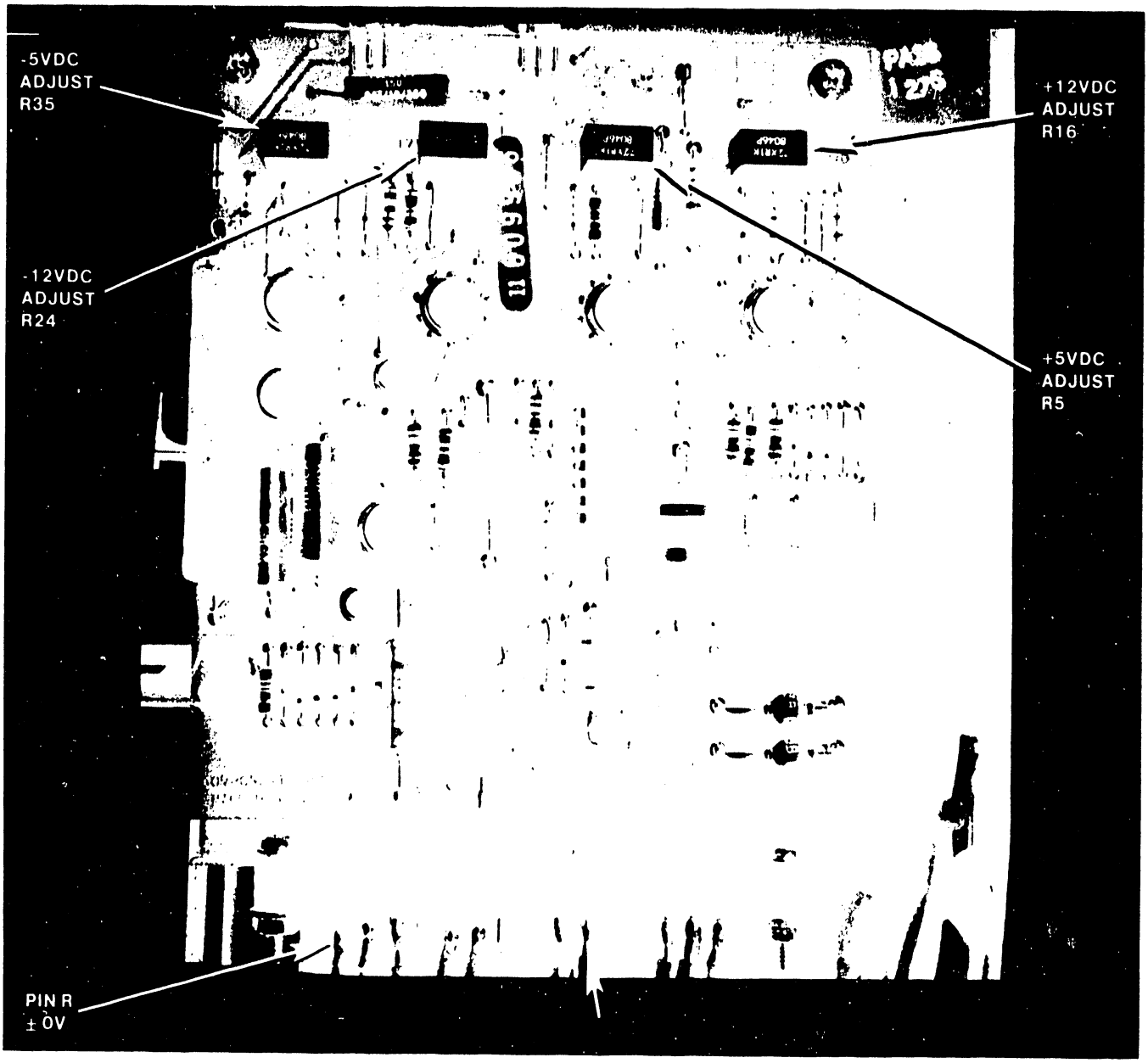

Figure 5-2. 210-7656 Adjustment and Test Points

5.2.1.3 Video Display Alignment Procedure

- o Create a document to display a full screen (80x24) filled with alternating characters "HO" (figure 5-3).
- o Set both Horizontal Hold (R33) and Vertical Hold (R15) to the middle of the stable display range.
- o Adjust the vertical raster size (R24) for a vertical height of 6.5" ± 0.20" (16.5cm ± 0.51cm) on the 12" display. (Use a standard or metric scale.)
- o Adjust the vertical linearity (R18) for character rows of equal height.
- o Repeat 2 and 3 until both requirements are met.
- o Adjust the width coil (Z2) for 8" ± 0.25" (20.3cm ± 0.64cm) of horizontal deflection on the 12" display. (Use standard or metric scale.)
- o Adjust the horizontal phasing (R35) for characters centered horizontally on the raster. Turn up the brightness sufficiently to observe the raster frame.
- o Adjust the focus (R28) for the best overall screen display.
- o Center the raster with the trim tabs located on the yoke.

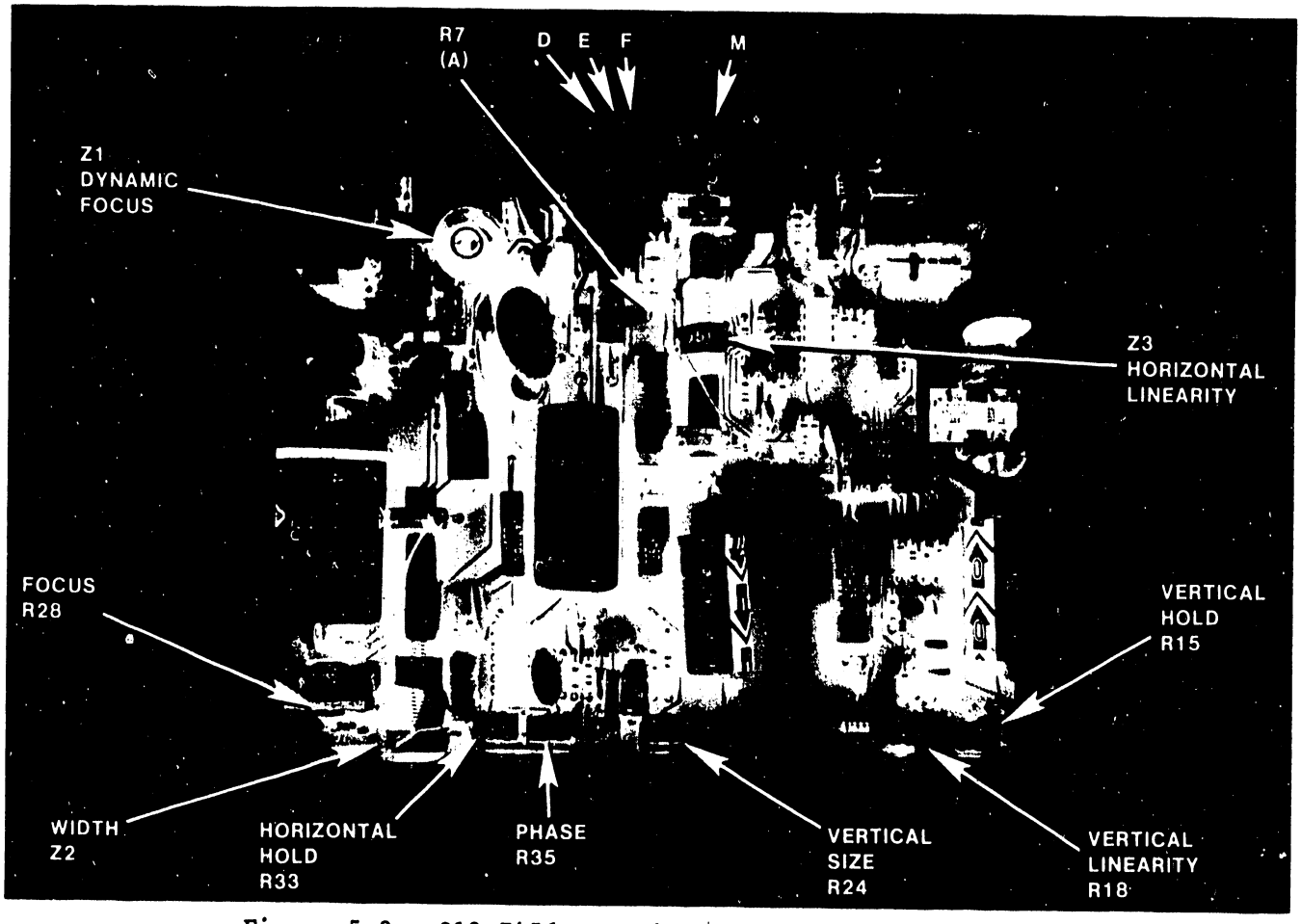

Figure 5-3. 210-7456 CRT Display Voltage Checks

5.2.2 REMOVAL AND REPLACEMENT

This section contains removal and replacement procedures for several major workstation assemblies. Before removing a particular assembly, ensure that the power switch is OFF and the AC power cord is unplugged. Remove the workstation cover as described in section 5.2.2.1. Refer to Chapter 7 (Illustrated Parts Breakdown) for identification information.

WARNING

CRT DISCHARGE PROCEDURE

Before performing any of the procedures in this section, discharge the CRT anode. Even with power removed, the workstation cathode ray tube can hold a charge of several thousand volts. To eliminate the risk of accidental CRT discharge, which can result in serious injury, discharge the CRT anode as follows:

- Attach one end of a length of insulated wire to the metal shaft of a plastic-handled, heavy-duty screwdriver.
- Attach the other end of the wire to CHASSIS GROUND.
- Using a non-conductive tool such as a plastic alignment tool, carefully raise the edge of the rubber anode cap high enough to insert the screwdriver.
- Taking care not to touch the metal shaft of the screwdriver or any metal part of the workstation, discharge the CRT anode by touching the anode clip with the grounded screwdriver.
- After discharging the CRT, remove the grounding wire and reseat the rubber anode cap.

5.2.2.1 Cover (Figure 5-4)

Removal:

- o Remove the three phillips screws located under the plastic strip on the keyboard and remove the keyboard plate.
- o Remove one phillips screw from each side of the workstation near the lower edge of the cover.
- o Remove the keyboard cover plate.
- o Lift the cover up and away from the workstation; take care not to hit or nick the CRT, or strain the brightness/contrast or fan wires.
- o Remove the brightness/contrast wires from the clamp on the side of the cover and disconnect the brightness/contrast cable from the connector on the top of the CRT chassis assembly. Remove the bezel and lay the cover on its side next to the workstation.
- o Disconnect the ac plug and ground wire from the fan.

Replacement:

- o To replace the workstation cover, reverse the previous procedure.

CAUTION

Be sure to connect the fan AC power and ground wires to avoid overheating of the workstation.

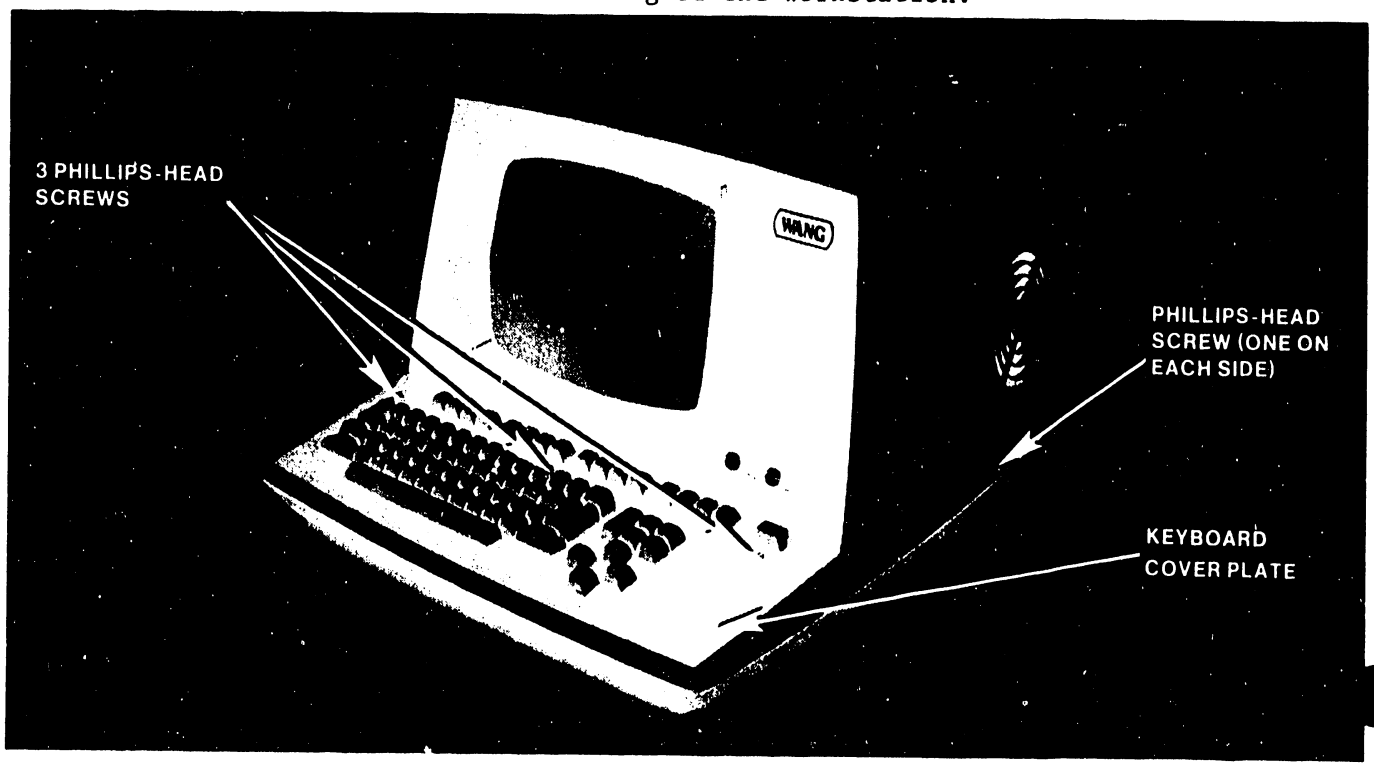

Figure 5-4. Cover Removal/Replacement

5.2.2.2 Keyboard (Figure 5-5)

Removal:

- o Remove the workstation cover.
- o Scribe the location of the 4 screws with spring washers that secure the keyboard to the workstation. This will aid realignment of the keyboard when replaced.
- o Remove the 4 screws that secure the keyboard to the base of the workstation.
- o Lift and pull the keyboard forward until easy access to the ribbon cable and ground wire is achieved.
- o Remove the screw that secures the keyboard ground wire to the power supply assembly.
- o Disconnect the keyboard ribbon cable from the underside of the keyboard assembly.
- o Remove the silver foil ground strap and plate.

Replacement:

- o To replace the keyboard, reverse the above procedure.

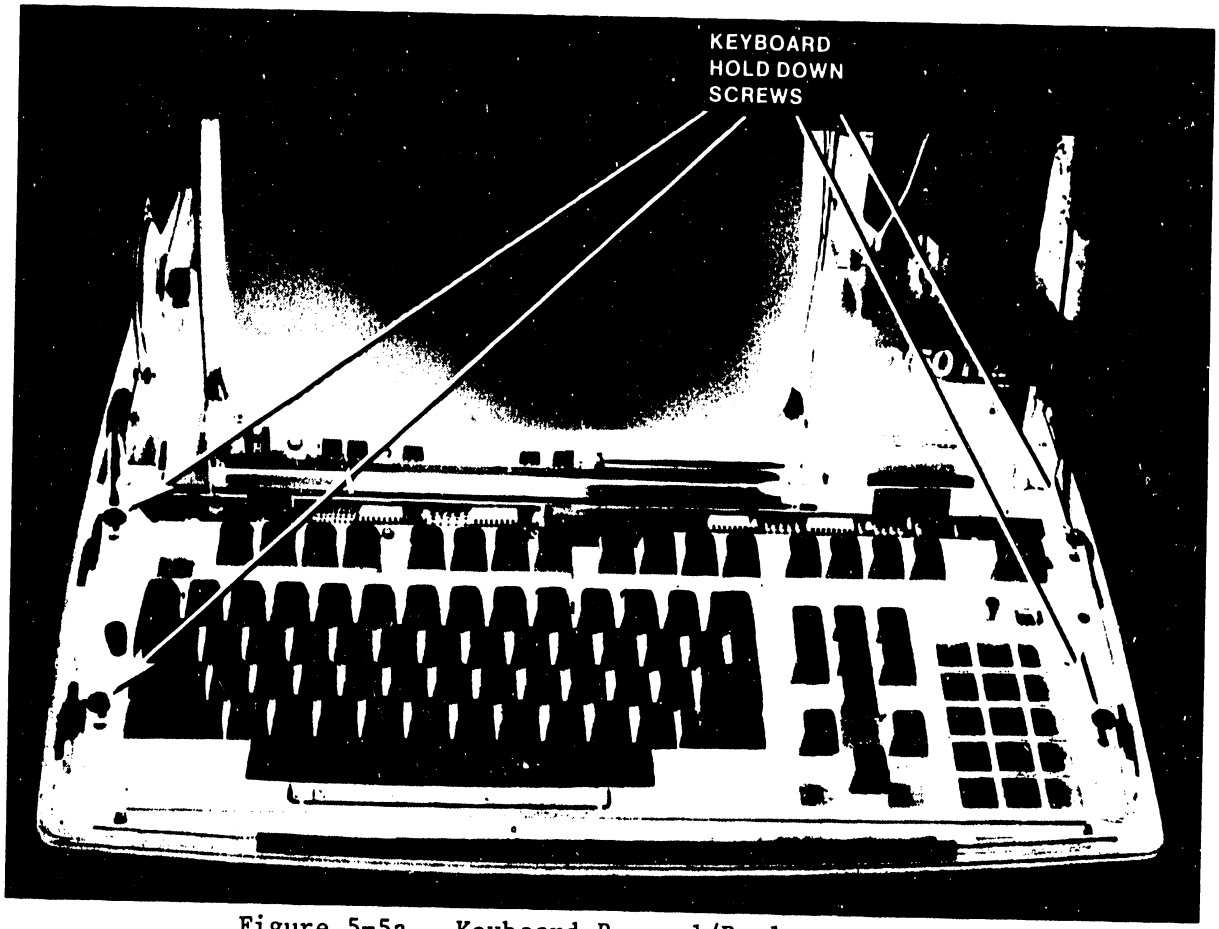

Figure 5-5a. Keyboard Removal/Replacement

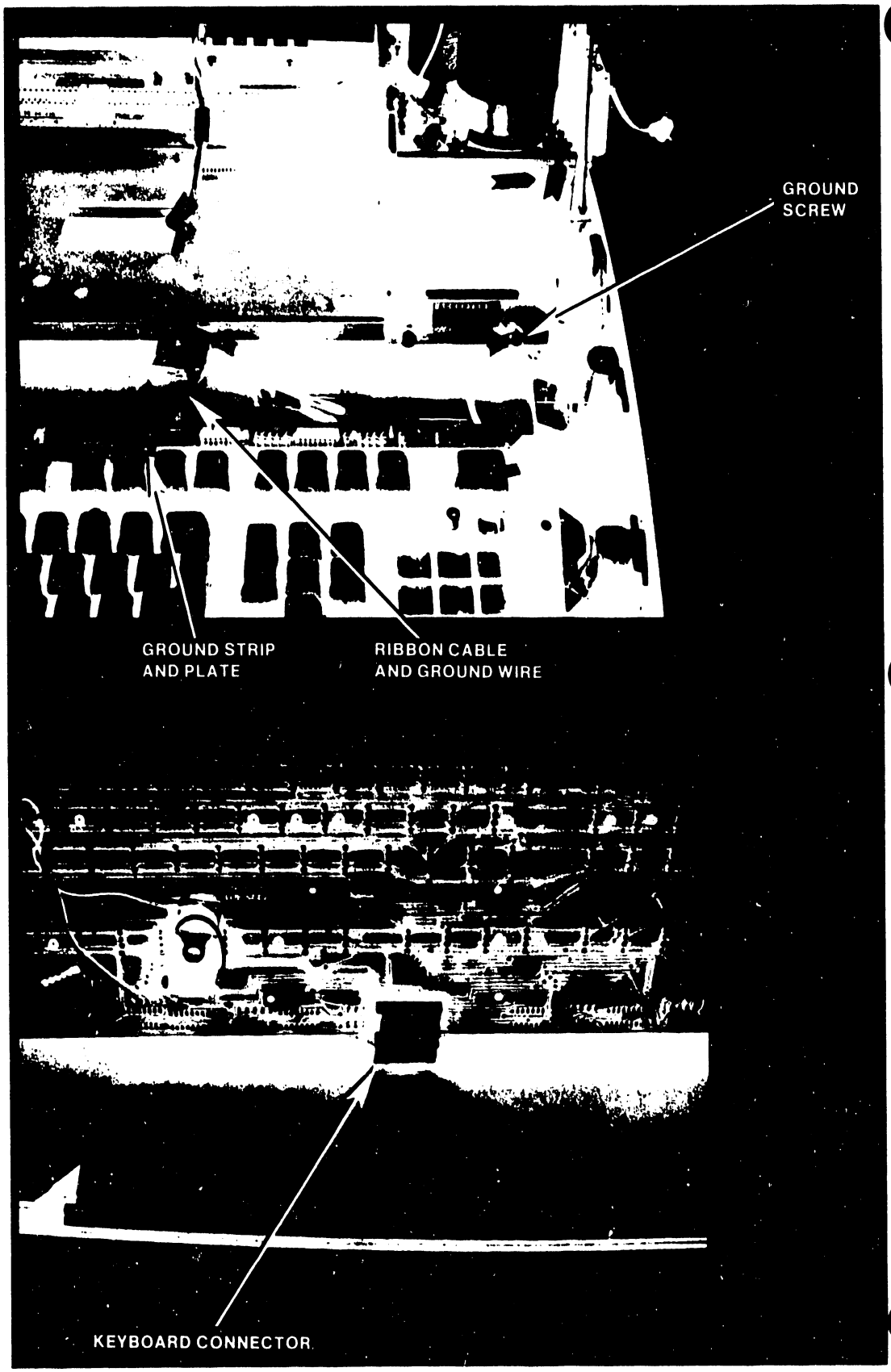

Figure 5-5b. Keyboard Removal/Replacement

5.2.2.3 CRT Chassis (Figure 5-6)

Removal:

- o Unplug the 2 Molex connectors that connect the CRT Chassis to the CPU/CRT PCA and the Power Supply.
- o Scribe the positions of the CRT on the sides of the chassis and remove remove the 3-1/4" hex-head screws and lock washers securing the CRT chassis to the chassis base plate.
- o Lift the CRT chassis out of the workstation.

Replacement:

- o To replace the CRT chassis, reverse the above procedure.

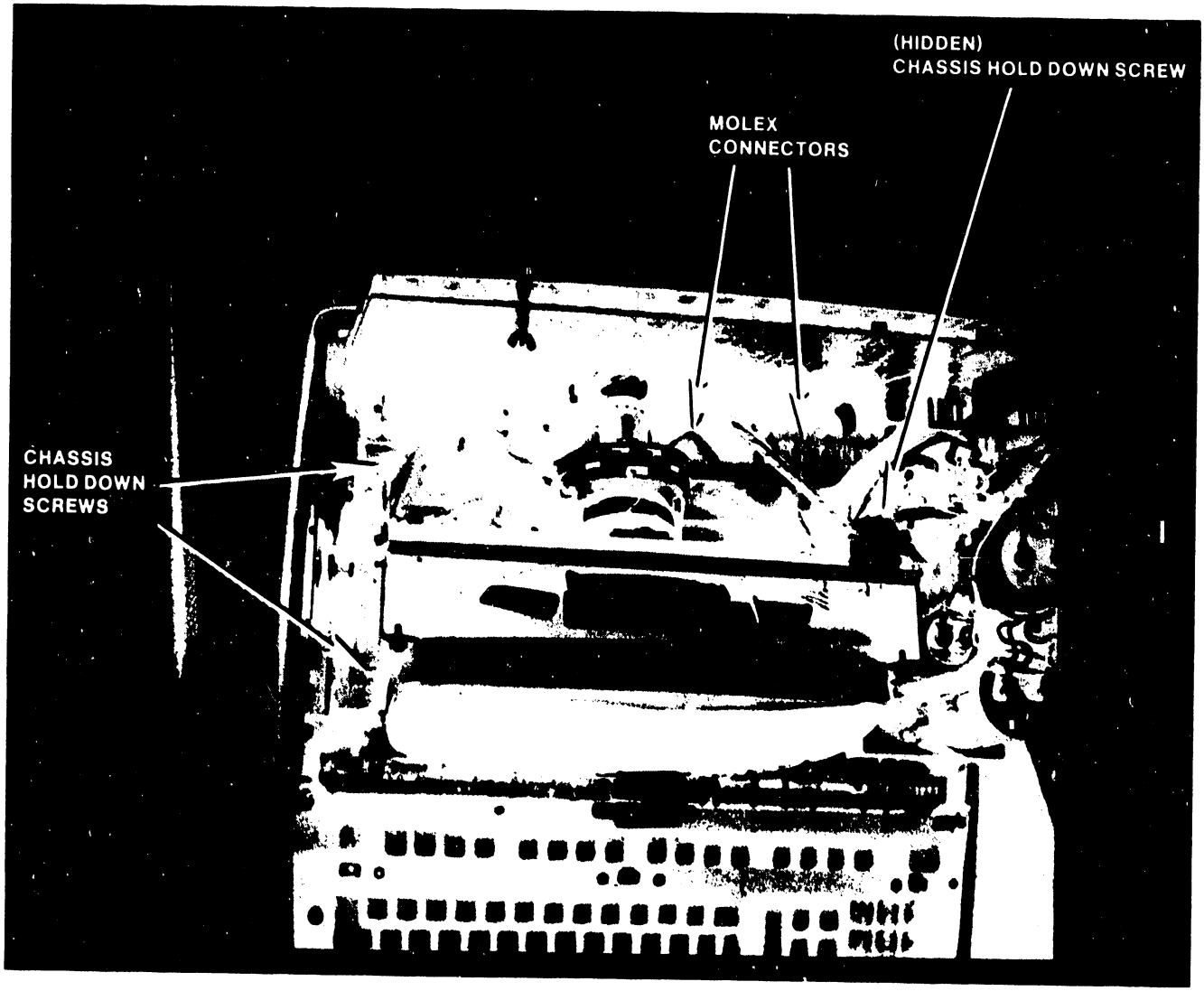

Figure 5-6. Chassis Removal/Replacement

5.2.2.4 Power Supply Assembly (Figure 5-7)

Removal:

- o Disconnect the two Motherboard Molex connectors from the Power Supply and the third connection from the power supply to the monitor electrics board.
- o Disconnect the AC molex connector between the power line filter assembly and the power supply or the three wires (brown/green/blue) at the base of the power supply.
- o Remove the 2-11/32" hex-head nuts (rear) and 2 phillips screws with washers (front) securing the power supply to the workstation base plate.

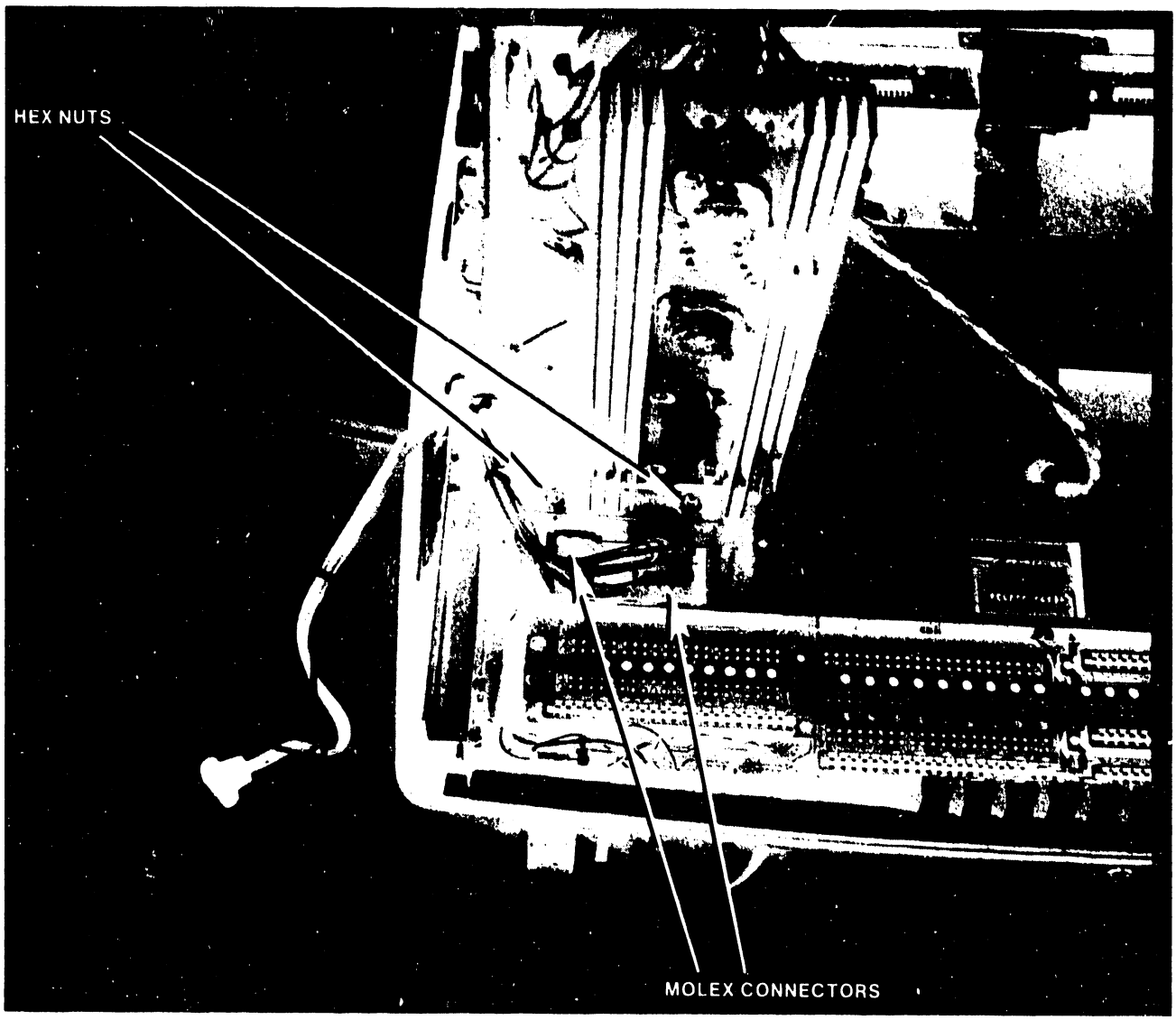

Figure 5-7a. Power Supply Removal/Replacement

o Cut any restricting tie-wrap.

o Disconnect ground to chassis.

o Remove the power supply assembly.

Replacement:

o To replace the power supply assembly, reverse the above procedure.

Figure 5-7b. Power Supply Removal/Replacement

5.2.2.5 Motherboard/Rear Panel Assembly (Figure 5-8)

Removal:

- o Remove the workstation cover.
- o Remove the PCA boards from the motherboard.
- o Remove the chassis, power supply and keyboard.
- o Remove the chassis base plate (2 phillips screws in front, 1 on each side).
- o Disconnect the ground clip in front of the base plate.
- o Remove the 4 phillips screws that secure the motherboard/rear panel assembly to the chassis base plate.
- o Remove the stiffener from the motherboard/rear panel (4 phillips screws).
- o Remove the motherboard/rear panel assembly.

Replacement:

- o To replace the motherboard/rear panel assembly, reverse the above procedure.

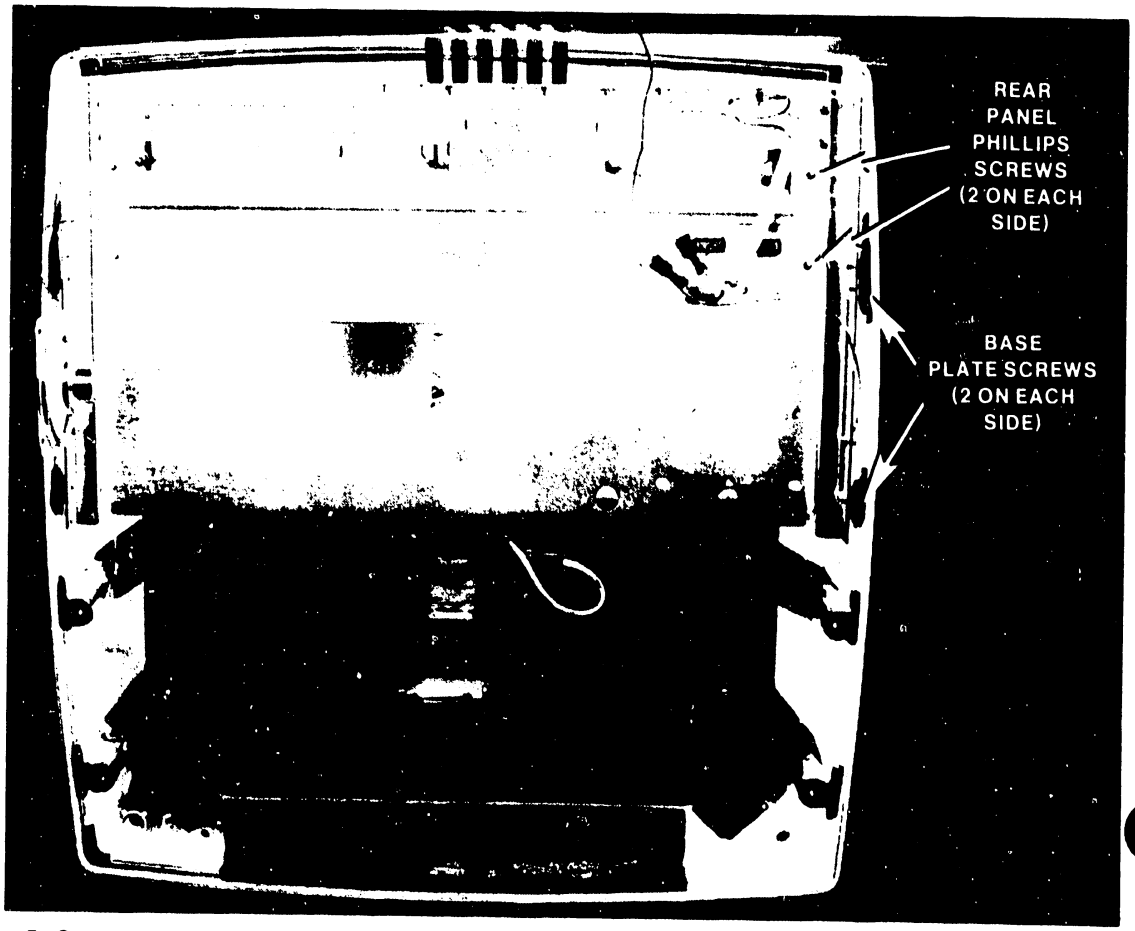

Figure 5-8a. Motherboard/Rear Panel Assembly Removal/Replacement

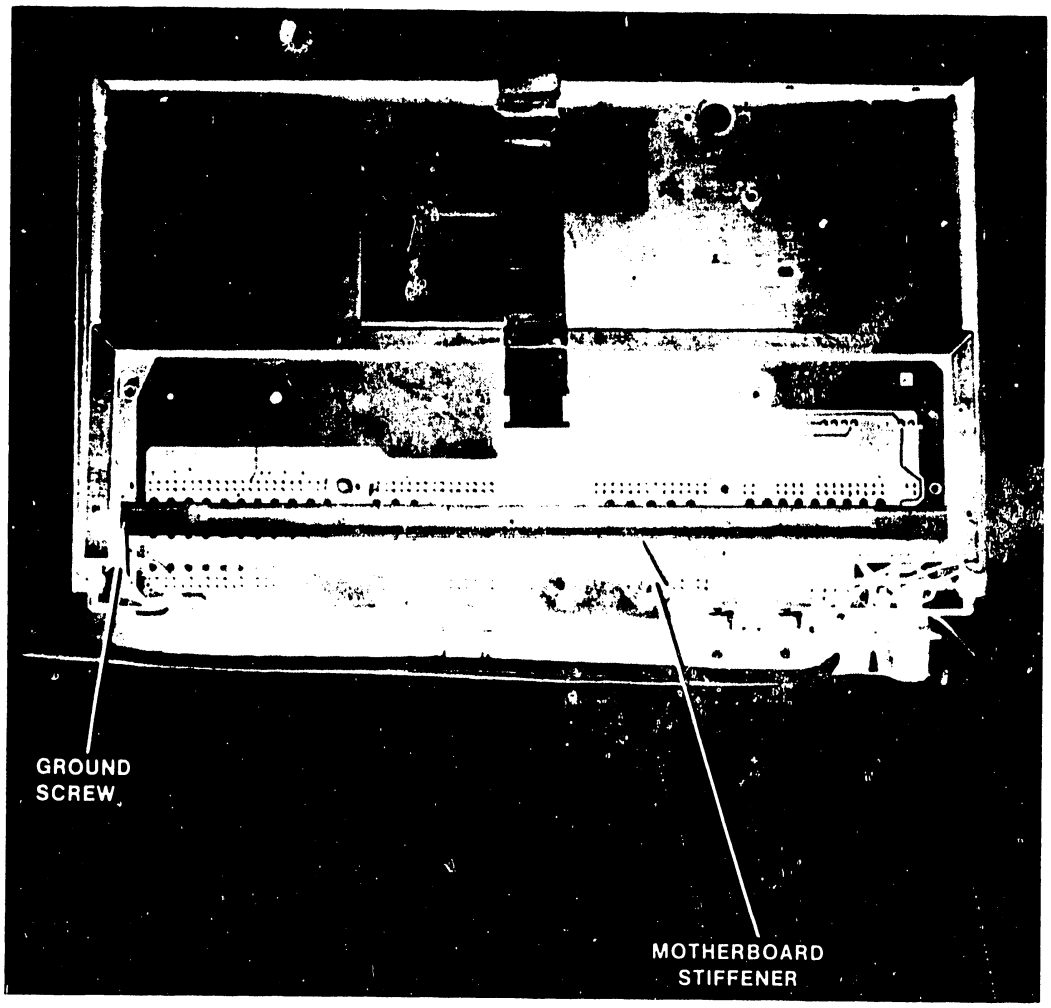

Figure 5-8b. Motherboard/Rear Panel Assembly Removal/Replacement

5.2.2.6 CRT PCA Assembly (Figure 5-9)

Removal:

o Remove the workstation keyboard.

o Clip any tie-wrap holding the board to chassis.

o Grasp the CRT PCA and remove it from the CRT Chassis.

Replacement:

To replace the CRT PCA, reverse the above procedure.

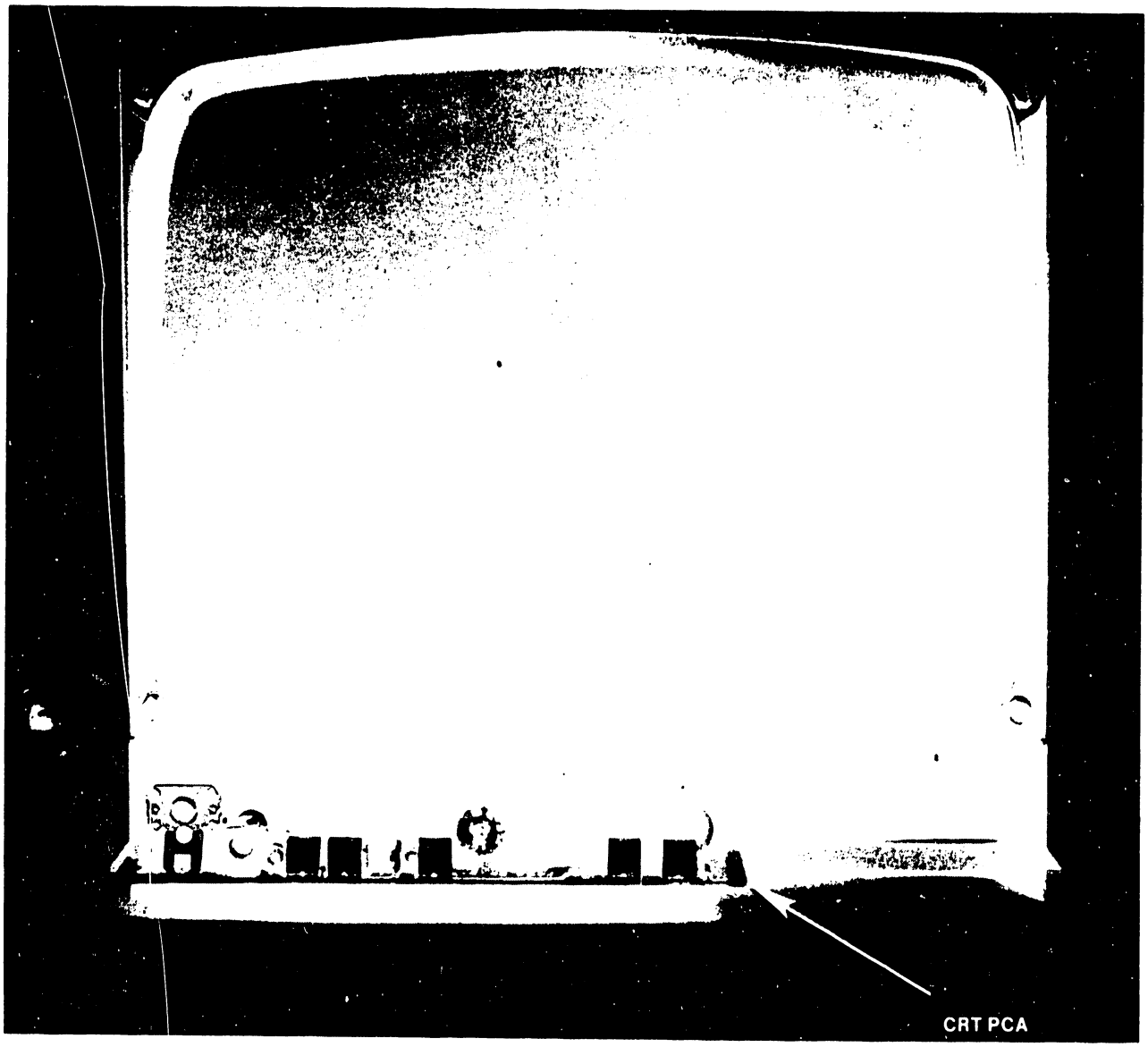

Figure 5-9. CRT PCA Removal/Replacement

5.2.2.7 Regulator PCA Assembly (Figure 5-10)

Removal:

- o Remove the phillips-head screw that secures the regulator PCA to the power supply.
- o Remove the regulator PCA.

Replacement:

- o To replace the regulator PCA, reverse the above procedure.

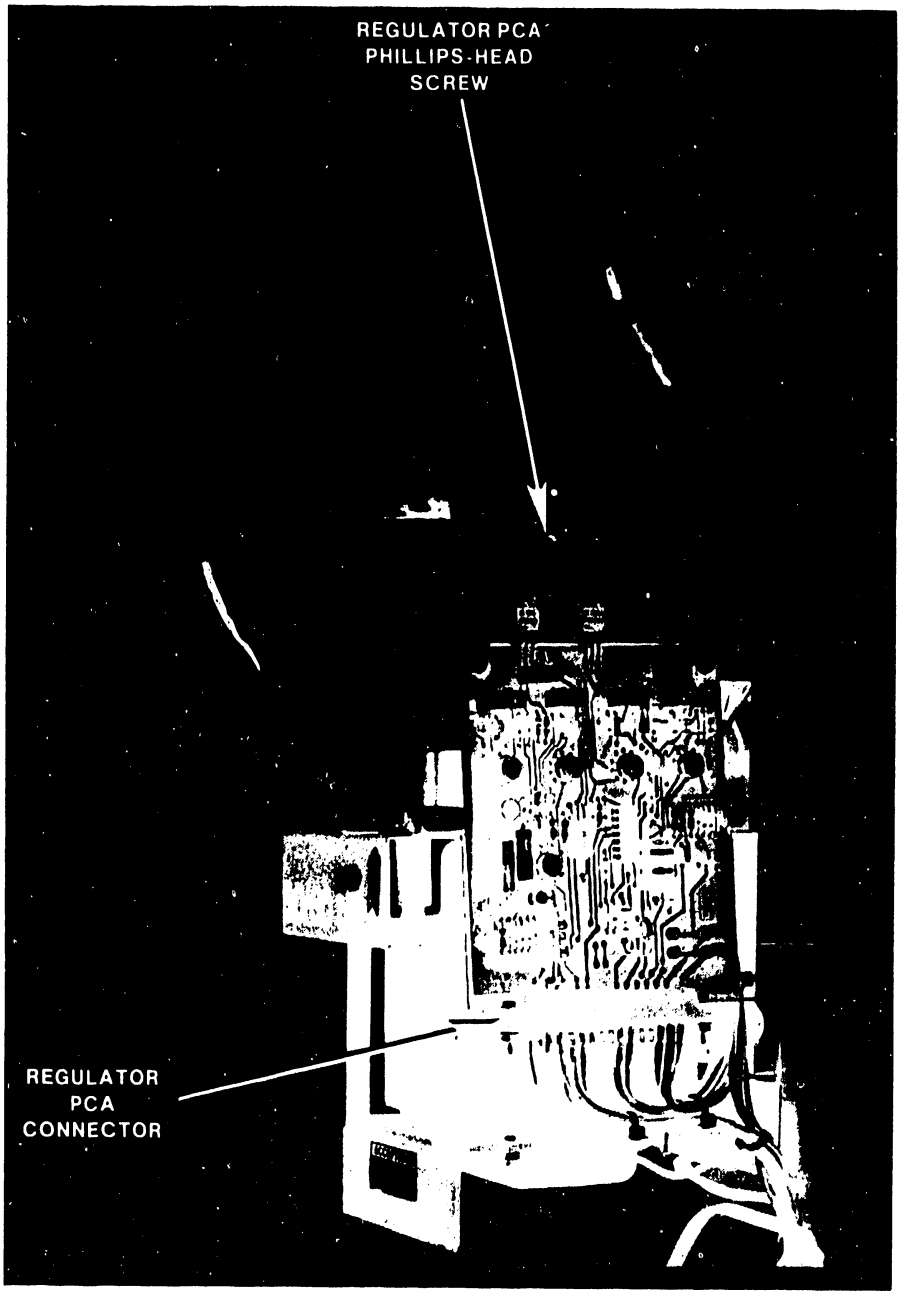

Figure 5-10. Regulator PCA Removal/Replacement

5.2.2.8 Keycap and Switch

Removal:

- Using the keycap removal tool (P/N 726-9545), remove the keycap from the switch being replaced and as many adjacent keycaps as required to provide adaquate work space.
- Unsolder the four terminals of the keyswitch from the underside of the keyboard.
- Insert the switch extractor tool (P/N 726-9608). Grip the switch extractor and pull straight up, removing the switch from the keyboard.

Replacement:

- Insert the new keyswitch. Take care to orient the switch properly and observe the solder terminals are through the printed circuit board prior to snapping in place.
- Solder the new switch in place.
- Replace the keycap(s). When the work has been completed, perform a visual check to ensure that the keycaps have been installed on the correct switches. Test the new switch to be certain that it functions properly.

CHAPTER 6 SCHE-MATICS

THE SCHEMATICS, WHEN AVAILABLE, ARE ON THE LAST FICHE IN THIS SET.

CHAPTER 7

ILLUSTRATED PARTS BREAKDOWN

CHAPTER 7
ILLUSTRATED PARTS BREAKDOWN

7.1 INTRODUCTION

This section contains the illustrated parts breakdown for the 5536 workstation. Use this IPB to identify parts during removal/replacement, alignment, and adjustment procedures; when troubleshooting or performing PM; or when ordering parts. The following chart indicates page and figure numbers for the major workstation subassemblies. The parts breakdown for PCBs is located in Chapter 6 (Schematics). Each schematic contains its own component layout and part number listing information.

SUBASSSEMBLY	PAGE NO.	FIGURE NO.
External Cover Assembly	7-2	7-1
12" Monitor Assembly	7-4	7-2
Motherboard/Chassis	7-6	7-3
Power Supply Assembly	7-8	7-4

NOTE

All items followed by a § indicate an FCC-approved part. All parts replacement or repair on installations completed after 10/1/83 must use FCC-approved parts. Older installarions may use either part number if there is a choice.

*EXTERNAL COVERS ASSEMBLY (ASSEMBLY PART NO. 279-4128)

ITEM NO.	PART NO.	DESCRIPTION
*1	449-0460	CVR MACHING CLOSED VENT
*1	449-0606§	COVER,(FCC)
*1	449-0143S	COVER 2200E/F(SLOT)
2	400-1009-11	SKLTN 115V 50/60 HZ 50CFM
3	449-0101-9	FAN GUARD 4" (WHITE)
*4	449-0459	12" CRT BEZEL
5	449-0548	PLATE LOGO WKSTN
6	655-0157	KNOB ALCO
7	652-0036	NUT SM. PAT. 3/8"-32
8	653-0022	WASHER 3/8" INT. TH.
9	336-0032	BRIGHTNESS POT
10	336-0035	CONTRAST POT
11	220-0160	CABLE
12	654-1274	CABLE CLAMP ADH. BACK
13	654-1185	SOCKET
*14	452-1092	FINISHING PLATE
*14	452-1081	FINISHING PLATE W/NUMERIC KEYPAD
*15	279-1026	BASE ASSEMBLY
*15	279-1038§	BASE ASSEMBLY,(FCC)
16	650-4105	10-32x11/8 TRUSS HD PHL

NOTE: ITEMS MARKED WITH A * INDICATE RSL ITEMS.

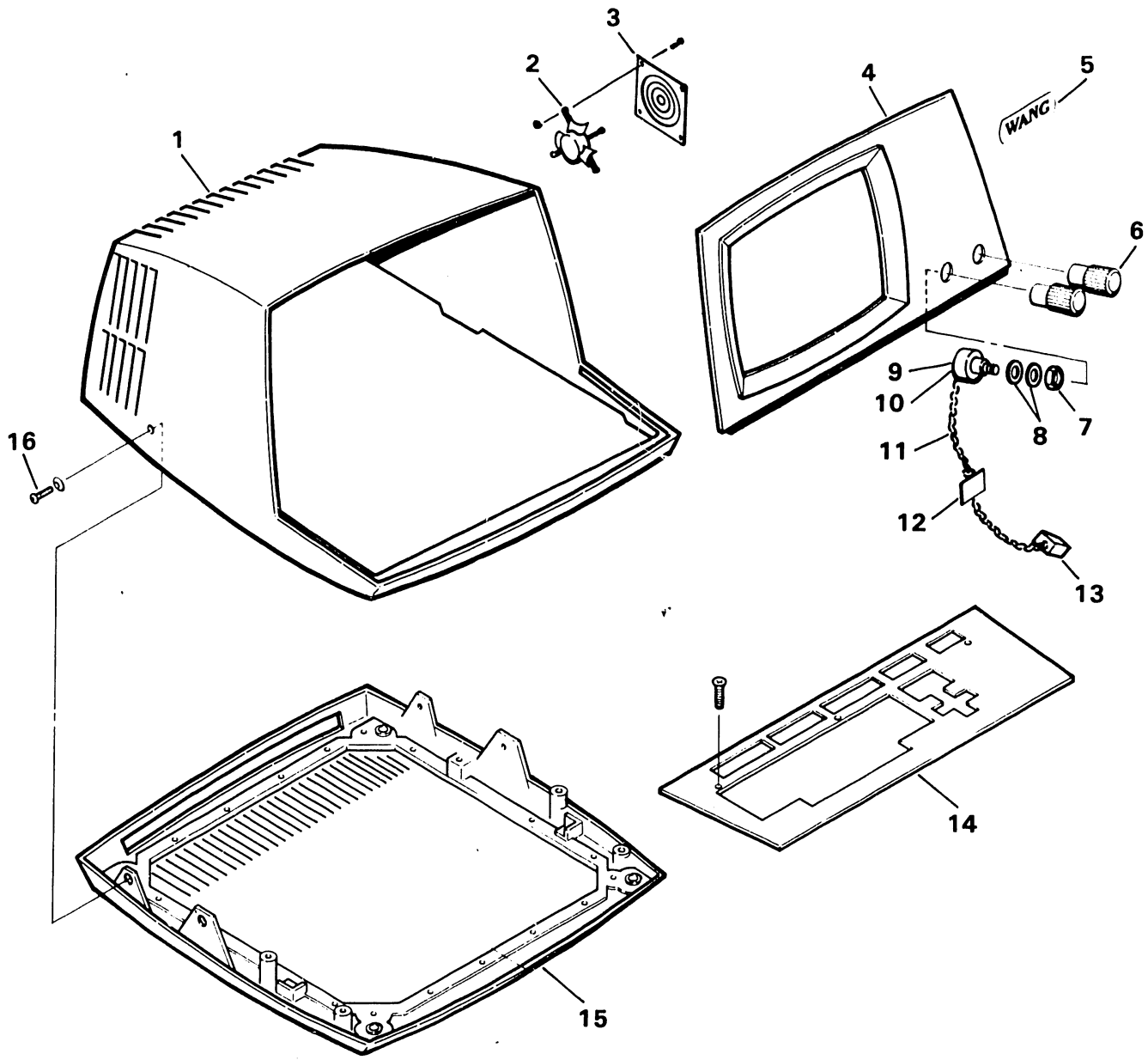

FIGURE 7-1 EXTERNAL COVERS ASSEMBLY
(ASSEMBLY PART NO. 279-4128)

*12" MONITOR ASSEMBLY (ASSEMBLY PART NO. 270-0372)

ITEM NO.	PART NO.	DESCRIPTION
1	451-3857	SIDE PANEL (R.H.)
2	651-0037	#8x3/8" SLTD HEX S.T. SCREW
*3	279-0526	POWER SUPPLY W/REG BD (TESTED)
4	615-0412	FISH PAPER 4x4
5	465-1643	GROUNDING SPRING
6	651-0037	#8x3/8" SLTD HEX S.T. SCREW
7	654-1184	6 POSITION HOUSING CONNECTOR
8	651-0037	#8x3/8" SLTD HEX S.T. SCREW
9	451-4473	SUPPORT BRACKET
10	651-0053	#10x3/8" HEX S.T. SCREW
11	340-0108	CRT
12	279-0509	CLICKER ASSEMBLY (NOT SHOWN)
12	325-2450	SWITCH, HALL EFFECT 4A2B
12	325-2451	SWITCH, HALL EFFECT 4B2K
12	325-2452	SWITCH, HALL EFFECT 4A2K
12	325-2453	SWITCH, HALL EFFECT 4B2B
12	325-2454	SWITCH, HALL EFFECT 4B3K
12	325-2455	SWITCH, HALL EFFECT 4B3A
12	370-0004	LAMP, WHITE
*13	271-1242	KEYBOARD 928 MICRO LUG
*13	271-1243	KEYBOARD, STD/KEYPAD
*13	271-1244	EXPANDED (INTERNATIONAL)
*13	271-1245	EXPANDED W/KEYPAD (INTERNATIONAL)
*13	271-1246	KEYBOARD, R/S MICRO
*13	271-1247	KEYBOARD, C MICRO
*13	271-1248	KEYBOARD, R/S EXPAN. GE (INTERNATIONAL)
*13	271-1249	KEYBOARD, C EXPAN. GE (INTERNATIONAL)
14	270-3092	DEFLECTION YOKE
15	451-1100	CHASSIS, CRT
16	650-3120	6-32x3/8" SEMS SCREW
17	320-0300	SPEAKER 3" 8 OHM
18	652-0032	6-32 LOCKNUT KEPS
19	451-1121	CHASSIS, 12"
20	451-3856	SIDE PANEL (L.H.)
21	650-2087	4-40x1/4" SEMS SCREW
22	654-1274	CABLE CLAMP ADH. BACK
23	452-4042	CARD GUIDE
24	462-0413	SPACERS
25	270-3104	FLYBACK TRANSFORMER ASSEMBLY
26	380-3011	20KV DIODE
27	350-2073	ANODE CONNECTOR
28	451-4472	NECKSAVER BRACKET
29	478-0448	NECKSAVER BRACKET INSULATOR
30	651-0037	#8x3/8" SLTD HEX S.T. SCREW
*31	210-7456	PCA 12" MONITOR ELEC.
32	270-3068	12" CRT HARNESS

NOTE: ITEMS MARKED WITH A * INDICATE RSL ITEMS.

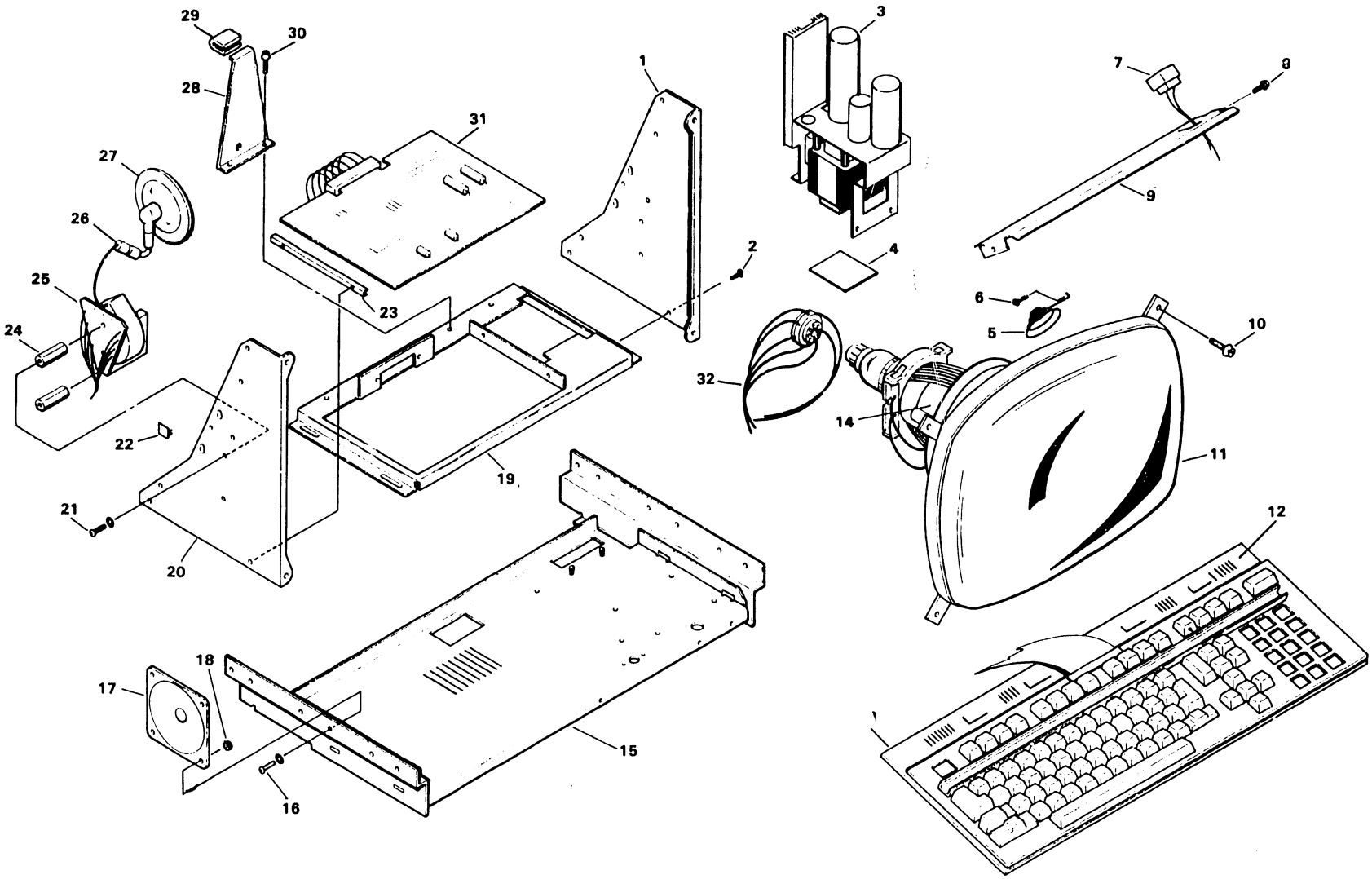

FIGURE 7-2 12" MONITOR ASSEMBLY (ASSEMBLY PART NO. 270-0372)

*MOTHERBOARD & W/S CHASSIS ASSEMBLY (ASSEMBLY PART NO. 270-0606)

ITEM NO.	PART NO.	DESCRIPTION
*1	210-7744-A	PCA AWS1/5536 UNIV DATA LINK 16K MEM
*1	210-7744-1A	PCA AWS1/5536 UNIV DATA LINK 32K MEM
*1	210-7744-2A	PCA AWS1/5536 UNIV DATA LINK 48K MEM
*1	210-7744-3A	PCA AWS1/5536 UNIV DATA LINK 64K MEM
2	650-3322	6-32x1 1/2" PH PHIL
3	462-0265	SPACER, PC BOARD
4	652-3006	6-32 WING NUT CAD PLATE
5	210-7545-A	PCA 2246C/AWS-1 COMBINED WS CRT/CPU
6	452-2562	STIFFENER, MOTHERBOARD
7	478-0723	SUPPORT BRKT MOTHERBOARD
8	220-3014	24-CONDUCTOR CABLE
9	462-0141	PHENOLIC SPACER
10	210-7542-2	PCB MOTHERBOARD 5536
11	220-1101	WIRE & LUG ASSEMBLY
12	462-0507	STANDOFF M/F, 4-40/4-40
13	350-1047	RS 232 CONNECTOR
14	653-0003	WASHER #4 NYLON
15	653-2000	WASHER #4 FLAT
16	650-2200	4-40x3/8" PH PHIL
17	650-2241	4-40x3/4" FL HD PHL MS BK OX
18	449-0309	STOP, PC BD 4 POS BLK
19	461-1545	SUPPORT BLOCK, SMALL
20	652-4005	4-40, LOCKNUT KEPS
21	459-3919	GND, STATIC REAR PANEL
22	360-9002	HEX NUT
23	360-9003	LOCK WASHER
24	325-0033	TOGGLE SWITCH
25	654-1011	GND LUG 3/8"
26	451-3632	PNL STATIC 2282
27	451-3919	5595-4 REAR PANEL
28	651-0009	#4x3/8" ST FL HD
29	350-1036	BNC SOCKET (F) CONN.
30	350-2078	TNC BULKHEAD (F) CONN.
31	650-2120	4-40x3/8 SEMS
32	220-1076	POWER CORD ASSEMBLY
33	654-1238	HEYCO STRAIN RELIEF
34	PART OF 24	
*35	360-1025-SB	FUSE, 2.5 AMP 250V
36	360-0000	FUSE HOLDER 90 DEGREE CONTACT
37	360-9000	RUBBER WASHER
*38	270-0618	5536 W/S CHASSIS ASSEMBLY
*38	270-0805§	5536 W/S CHASSIS W/MOTHERBOARD (FCC)
39	220-1512	WIRE & LUG ASSEMBLY
40	653-3003	#6 SPLIT WASHER
41	652-3004	6-32 HEXNUT
42	660-0681	FOAM RETAINER

NOTE: ITEMS MARKED WITH A * INDICATE RSL ITEMS.

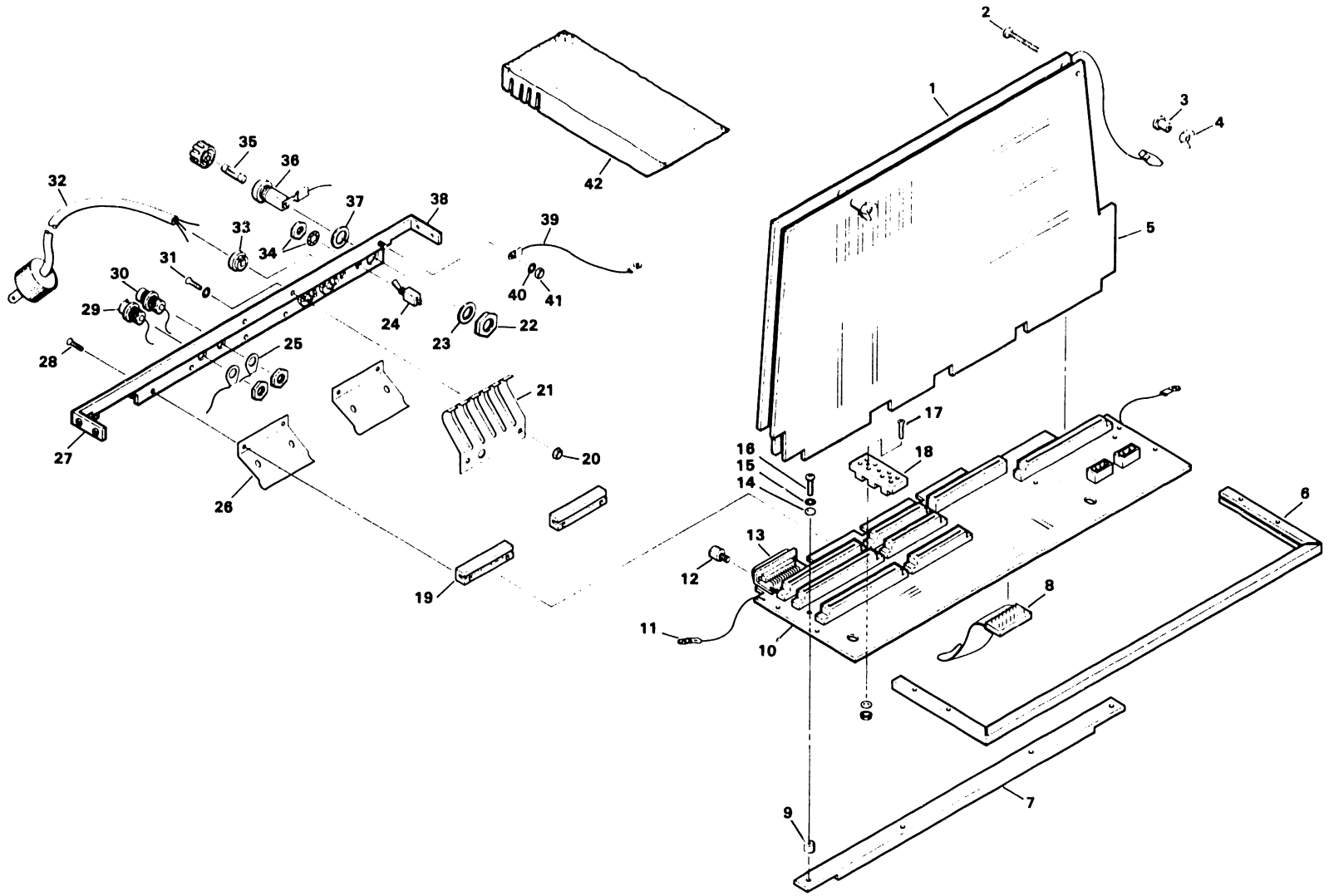

FIGURE 7-3 MOTHERBOARD & W/S CHASSIS ASSEMBLY

*POWER SUPPLY ASSEMBLY (ASSEMBLY PART NO. 279-0526; 270-0879(FCC))§

ITEM NO.	PART NO.	DESCRIPTION
1	451-4660	BRKT PC BD RTNR
2	654-1290	BUSHING, SNAP
3	650-4160	8-32x1/2" PAN HD PHIL
4	650-3080	6-32x1/4" SCREW
5	451-1141	POWER SUPPLY CHASSIS
*6	210-7656	REGULATOR PCA
7	650-2200	4-40x5/8" PAN HD PHIL
8	350-0008	30-PIN CINCH CONNECTOR
9	220-1143	WIRE & LUG ASSEMBLY
10	653-4002	#8 FLAT WASHER
11	650-4120	8-32x3/8" PHL SEMS
12	451-7035	BRKT. POWER SUPPLY
13	652-0029	8-32 LOCKNUT KEPS
14	652-0029	8-32 LOCKNUT KEPS
15	PART OF 16	
16	270-3236	TRANSFORMER HARNESS
17	PART OF 16	
18	462-0450	SPACER, DELRIN
19	420-1005	POWER CORD ROTRON FAN
20	325-2117	SWITCH, 115/220
21	652-3000	6-32 HEXNUT
22	410-2005	LINE FILTER, 5 AMP CORCOM 5K1
23	300-3069	CAP., 27000uf, 30V
24	300-9022	CAP CLAMP 2 1/16" 3 LUG
25	650-3207	6-32x5/8" PAN HD PHIL
26	652-3004	6-32 HEXNUT
27	300-9009	CAP CLAMP 1 1/4" 2 LUG
28	652-0032	6-32 LOCKNUT KEPS
29	300-3074	CAP., 7300uf, 40V
30	300-3049	CAP., 77000uf, 15V
31	650-3120	6-32x3/8" PAN HD PHIL
32	270-0627	HEATSINK ASSEMBLY 2 BD WS REG
*33	652-0029	8-32 LOCKNUT KEPS

NOTE: ITEMS MARKED WITH A * INDICATE RSL ITEMS.

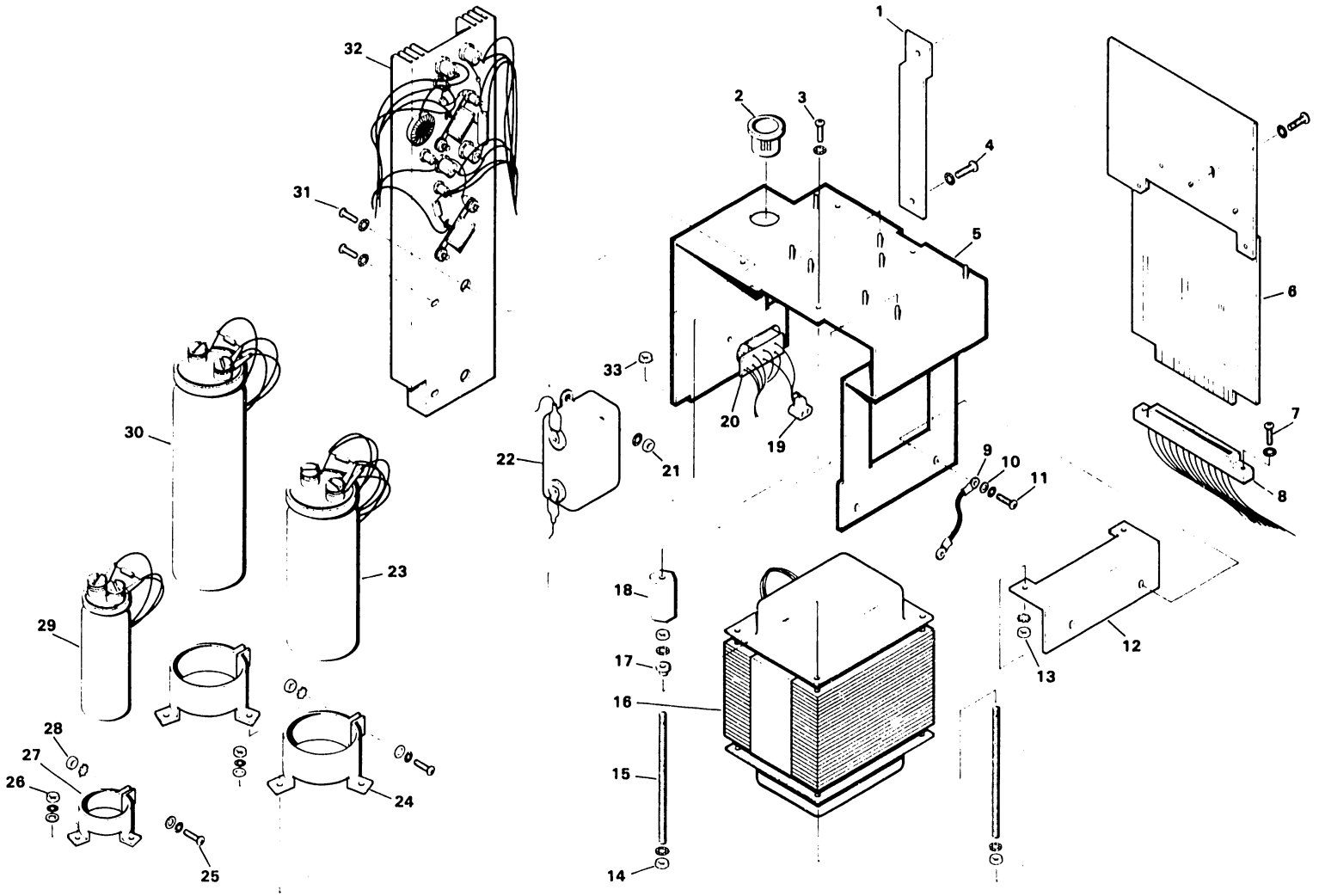

FIGURE 7-4 POWER SUPPLY ASSEMBLY (ASSEMBLY PART NO. 279-0526) or 270-0879 (FCC)

CHAPTER 8

TROUBLESHOOTING PROCEDURES

CHAPTER 8
TROUBLESHOOTING PROCEDURES

8.1 GENERAL TROUBLESHOOTING

Effective troubleshooting is carried out from a system viewpoint. No procedure can list every potential problem or combination of problems for even a very simple device. The troubleshooting flowcharts provided in this section are intended as aids for systematic investigation, diagnosis, and repair of failures common to all 5536 workstations described in this manual.

8.2 PCA 7544/7744 PROBLEMS

Problems that indicate PCA 7744/7544 difficulty are generally related to workstation main memory or to communication with the system master (data link).

- o Continuous READ - screen blank
- o No startup - screen blank
- o LINE ERROR message on startup
- o PARITY message on startup -- screen slowly blanks
- o All "9"s displayed on screen -- PROM trying to load. Correct switch setting. Switch 1 must be OFF.

8.3 PCA 7545 PROBLEMS

Problems that indicate a bad 7545 PCA are generally related to CPU, video, or keyboard functions. The board should be swapped when any of the problems listed here are encountered.

- o Keyboard repeat keys function incorrectly
- o Keyboard entry is erratic or absent
- o Display is erratic or erroneous
- o Video sync. problems (try pot adjustments first)
- o Intensity and character control (underline, etc) problems (try pot adjustments first)
- o Beeper/clicker problems (also check speaker and speaker circuit)
- o Faulty peripheral selection
- o System program does not load

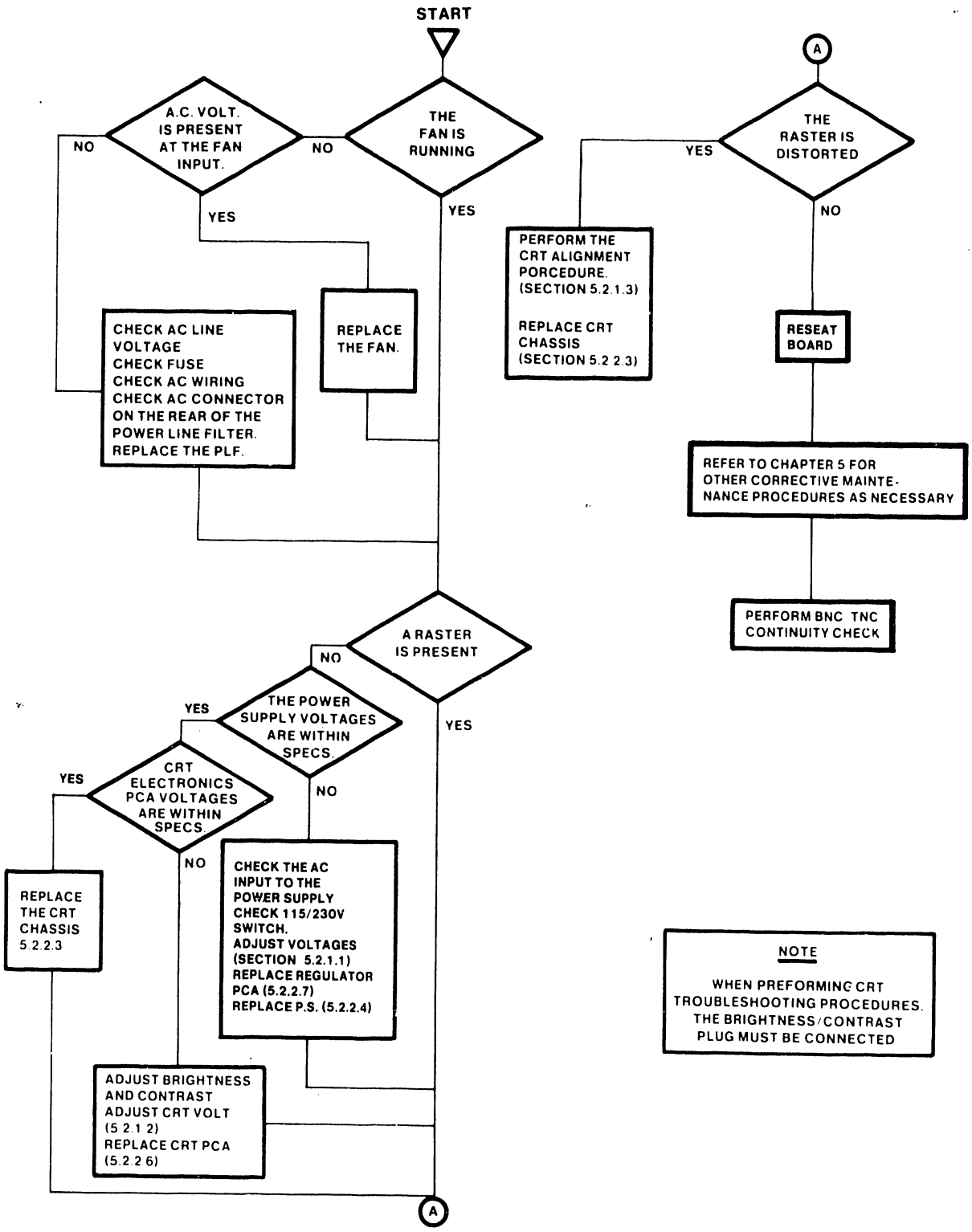

Figure 8-1. 5536 Troubleshooting Flowchart

8.4 TC TROUBLESHOOTING

The troubleshooting flowchart provided on these three pages is intended as an aid for systematic investigation, diagnosis, and repair of the Telecommunications workstations described in this manual.

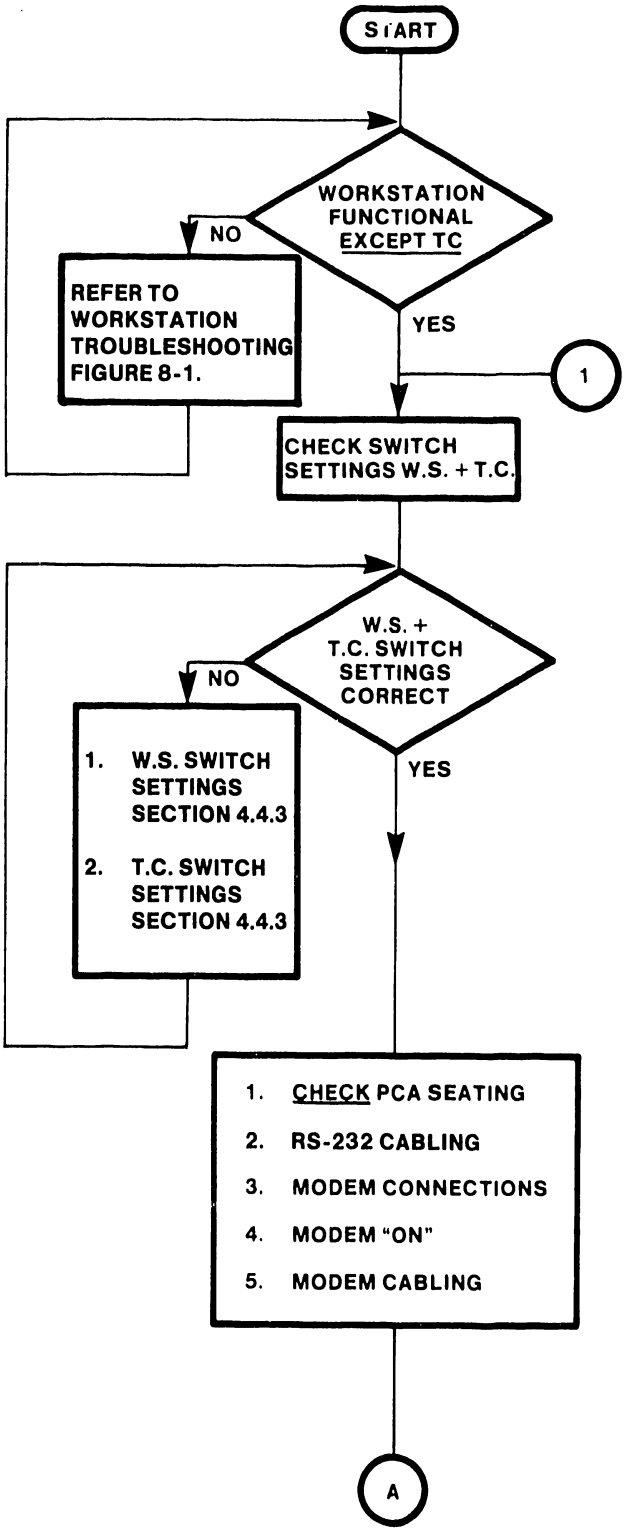

Figure 8-2. TC Troubleshooting Flowchart (Sheet 1 of 3)

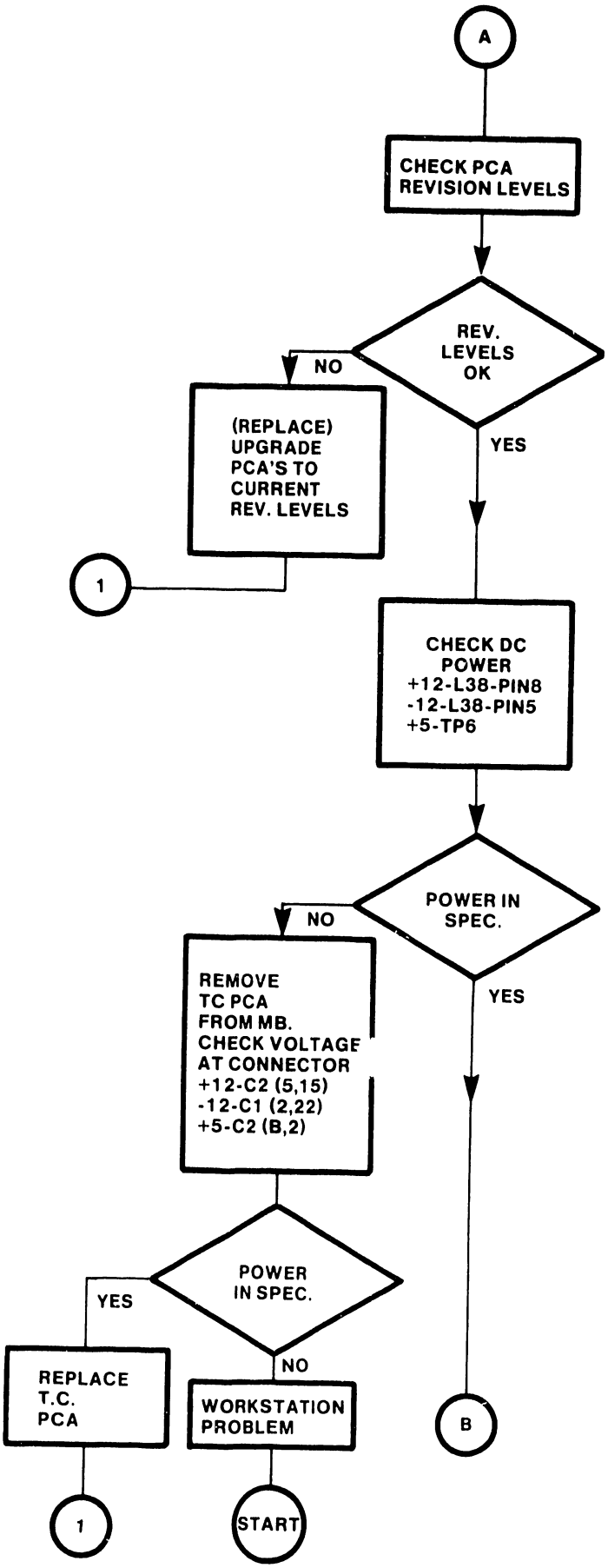

Figure 8-3. TC Troubleshooting Flowchart (Sheet 2 of 3)

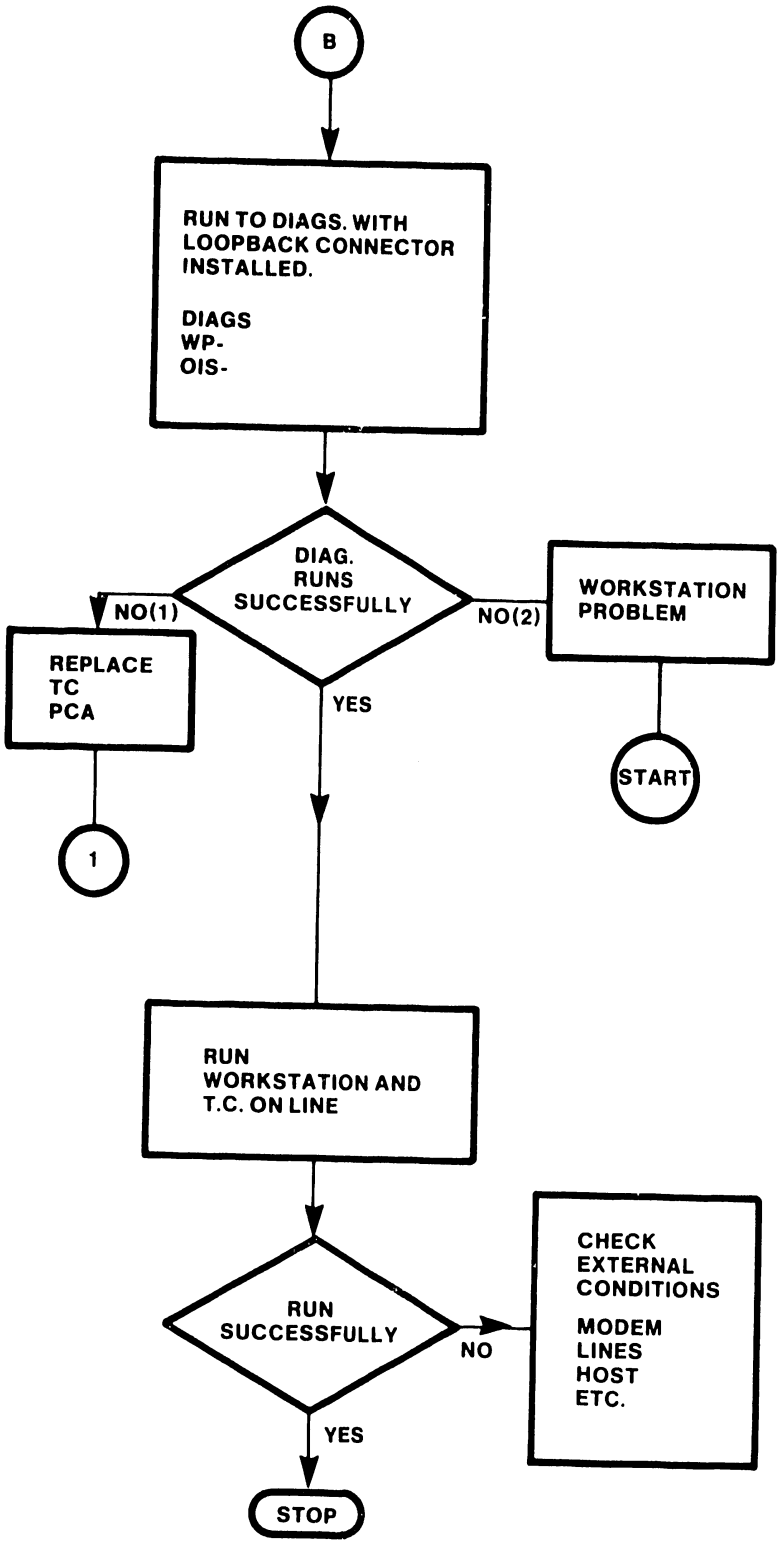

Figure 8-4. TC Troubleshooting Flowchart (Sheet 3 of 3)

APPENDIX A

KEY ABBREV-IATIONS

APPENDIX A
KEY ABBREVIATIONS

Key	
BKS	Backspace
CAN	Cancel
CMD	Command
CTR	Center
COP	Copy
CE	Cursor East (Right)
CN	Cursor North (Up)
CS	Cursor South (Down)
CW	Cursor West (Left)
DAL	Decimal Tab
DEL	Delete
EX	Execute
fmt	format (L.C.)
FMT	Format (U.C.)
GL	Glossary
GO	Go To Page
IND	Indent
INS	Insert
mg	Switch Document (L.C.)
MG	Don't Switch Document (U.C.)
MOV	Move
NOT	Note
NXS	Next Screenload
PVS	Previous Screenload
PAG	Page
RET	Return
rep	Replace (L.C.)
REP	Replace (U.C.)
SP	Space Bar
sch	Search (L.C.)
SCH	Search (U.C.)
STP	Stop Code
TAB	Tabulation
UND	Underscore

APPENDIX B MNEMON-ICS

APPENDIX B
MNEMONICS

8BS	Eight bit strobe
A_0-A_{15}	Z80A address bits
AC_0-AC_6	Column Memory Address (CRT Memory)
AET	Keyboard repeat key function
AR_0-AR_4	Row Memory Address (CRT Memory)
ARC_7-ARC_{10}	Row/Column Address (CRT Memory)
AUTO RESET	Automatic Reset caused by power turn ON
BLA	Blank CRT screen
BPF	Bad Parity Flip-Flop
BUS	Busy signal
BUSAK	Busy Acknowledge
BUSRQ	Bus Request
C_0-C_6	Column Character Count
C4	Refresh Logic Clock
CDO	Chip Select Drive Memory Bank 0
CE	Chip enable for CRT memory
CE_0-CE_3	Chip Enable Memory Bank 0-3
CHAR*	Select R/W Character (CRT Memory)
CHAR VIDEO	Character Video Display Dots to CRT
CI	Character Inhibit
CICL	Character-In Clear
CK*	CRT clock
CLICK	Keyboard clicker
CLKWS	
CPE	CRT parity error detected
D_0-D_7	Eight bit system data bus
DAX	Keystroke acknowledge
DBA	
DBUSRQ	Data Bus Request
DKS	
DLE	Data Link Error
DL RESTART	Data Link Restart
DLS	Data Link Strobe
DPARE	Data Parity Error
DRC	Data read clock
EDK	
EDL	Enable Data Link
+GA	
+GB	
HB	Horizontal blanking
HS	Horizontal sync

IM_2	
INT	Interrupt
INTTC	Telecommunications Interrupt
IORQ	CPU input/output request
K_0-K_6	Keyboard data
KDKS	
KP	
KS	Keyboard strobe
KWR	
LOCK	Keyboard shift lock key
M1	CPU fetch cycle
MCK	Master Clock
MPE	Memory parity error detected
MR	Master reset
MREQ	CPU memory request
MWAIT	Memory Wait cycle (Delayed access)
NOP	No operation start-up signal
NR	Status bit in workstation (Not Running)
PARE	Parity Error
P/C WAIT	
PROMCS	
PROM SW	
PWRST	Power Reset
-RA,-RB	Receive Coax Line
RD	CPU read
RESTART	Initializes CPU to a new start
RFSH	Refresh
SDF	Sync detect flip-flop
SH KEY	Keyboard shift key
SHLED	Shift key indicator lamp
SL	Selected lamp
SPK	Keyboard alarm speaker
SPKWS	
SRE	Serial read error
SWMUX	
TESTER BUSRQ	
TMR	Tester Master Reset
UCO	
VB	Vertical blanking
VIDEO OUT	
VS	Vertical sync

WAIT	CPU wait request
WCHAR	Write to character CRT memory
WCNT	Write to control CRT memory
WR	CPU write
WRE	System write early signal
WTR	Power supply signal to trap CPU to address 0000

APPENDIX C

INTER-CONNEC-TION DIAGRAMS

"THIS DRAWING AND THE DATA SHOWN THEREON ARE THE CONFIDENTIAL PROPERTY OF AND ARE PROPRIETARY TO WANG LABORATORIES, INC. THIS DRAWING AND THE DATA SHOWN THEREON MAY NOT BE MADE PUBLIC WITHOUT THE WRITTEN CONSENT OF WANG LABORATORIES, INC. IF FOR ANY REASON THIS DRAWING IS PERMITTED BY WANG TO LEAVE THE PHYSICAL CUSTODY OF THE COMPANY, IT IS RETURNABLE UPON THE DEMAND OF WANG LABORATORIES, INC."

DO NOT SCALE

FAN PLUG SEE DETAIL "A"

115 VAC

115 | 230

S1

BRN/YEL

BRN

BLK/YEL

GRN

BLK

LINE FILTER 5 AMP

V250LA20

T1

YEL

YEL/BLU

YEL

BLU

BLU/WHT

BLU

BLU

J5

D

J3 PIN 1 > ±0V

C4 7300 MFD 90VDC

R1 1KΩ ½W 5%

⑪ (M) -18V

C3 27000MFD 30VDC

±0V

R2 1KΩ ½W 5%

⑩ (L) +18V

C2 7700 MFD + 15VDC

R3 100Ω 1W

⑭ (R) ±0V < J1 PIN 3

D2 IN1200A 100V

D3 IN1200A 100V

⑧ JD

5V DRIVE ⑤

C1 50μf 50V

J2 PIN 3 > +17V

D1 5.1V 1W IN4733A

R5 .01Ω 3W 3%

Q2 2N5301

⑤ (C) 5V SENSE

⑮ (S) +5V RETURN

J1 PIN 2 +5VR

D4 IN1200A 100V

D5 IN1200A 100V

Ⓐ 18 VAC T2

Ⓑ 18 VAC T1

J3 PIN 2 > +12VR

L1

R4 .02Ω 3W 3%

⑥ 12V RETURN

J2 PIN 1 +12VR

+12V SENSE ④

+12V DRIVE (F)

Q1 2N6285

HEATSINK

DETAIL "A"

FAN PLUG

Ⓟ WTR < J2 PIN 2

⑫ -5VR < J1 PIN 1

Ⓗ -12V < J2 PIN 4

⑭ (R) ±0V < J1 PIN 3

J4

	18 VAC T2	Ⓐ
	18 VAC T1	Ⓑ
	+5V SENSE	Ⓒ
+12V SENSE		④
+5V DRIVE		⑤
+12V RETURN	+12V DRIVE	⑥
-12V DRIVE	-12V R	Ⓕ
JD		Ⓗ
		⑨
+18V	+18V	⑩
-18V	-18V	Ⓛ
-5V		⑫
	WTR	Ⓟ
±0V	±0V	Ⓡ
+5VR RETURN	+5VR RETURN	⑮

J1

1	-5V
2	+5VR
3	±0V

J2

1	+12V
2	WTR
3	+17V
4	-12V

J3

1	±0V
2	+12V

P1 — P3 — P2 — GROUND — LINE

COMPONENT	TYPE	W.L. PART NO.
C1	50μF 50V 10%	360-3010
C2	77,300 MFD 15VDC	360-3049
C3	27,000 MFD 30VDC	360-3063
C4	7,300 MFD 90VDC	360-3074
R1,2	1KΩ ½W 5%	331-3011
R3	100Ω 1W 10%	332-2010
R4	.02Ω 3W 3%	334-0032
R5	.01Ω 3W 3%	334-0041
D1	IN4733A 5.1V 1W	380-2055
D2-5	IN1200A 100V 1W	380-3000
Q1	2N6285	375-1047
Q2	2N5301	375-1048
S1	SL. SW. 1.5/230VAC	325-2112
L1	125μH 3A	300-0007
T1	TRANSF. 8 AMP	410-0126
LINE FILTER	5AMP CORCOM 5K1	410-2005
VARISTOR	250V VARIS.	380-5001

REVISION	BY	DATE
ORIGINATED PER DWG # E 867 ADDED 2.1.1.1.1.1.1	S.R.E.	1-14-70
REVISED PER ECN # 13446 AND ADDED J11 J12 J13 J14 J15 J16		
REVISED PER ECN # 14148 ADDED J17 J18		

WANG LABORATORIES, INC. LOWELL, MASS. U.S.A.

BY	DATE	APPROVED BY	DATE
DWN		E ENGR	
CHK		M ENGR	
		MFG ENGR	

MATERIAL

MODEL NO 2236 — SEE ENGR'G SPECIFICATIONS — No.

FINISH

TOL EX AS NOTED

TITLE INTERCONNECTION DIAGRAM

WANG PART NUMBER 720-2436 | SIZE D | DRAWING NUMBER 720-2436-900 | REV

SCALE - | SHT | OF

CHAPTER 6 SCHE-MATICS

CHAPTER 6
SCHEMATICS

Schematic diagrams for the component parts of the 5536 Workstations are included in this chapter of the manual. The schematics reflect the latest revisions at the time of printing.

The following is a list of the schematics contained in this chapter, the titles, drawing numbers and revisions at time of printing.

TITLE	DWG. NO.	REV.	COMMENTS
Workstation Electronics PCA	210-7456	13	Common
Data Link PCA	210-7744	12	Common
Keyboard PCA	210-7229	3	Common
Workstation Regulator PCA	210-7656	11	Common
Telecommunications PCA	210-7541	2	Common for all TC units

THE INFORMATION CONTAINED IN THIS DRAWING IS THE PROPERTY OF WANG LABORATORIES, INC., AND IS CONFIDENTIAL AND PROPRIETARY TO WANG LABORATORIES, INC.. IT MAY NOT BE COPIED, REPRODUCED OR USED IN WHOLE OR IN PART FOR ANY REASON.

MILLIMETERS IN PARENTHESIS.
TOLERANCES TO BE EQUIVALENT TO INCH DIMENSIONS.

DO NOT SCALE

EXTERNAL
CONTRAST
VIDEO IN
CW
VIDEO ±0V
NOT LOADED FOR 7456-2

VARIATION CHART			
COMP	7456	7456-1	7456-2
R19	330-3068	330-4027	330-3063
C30	300-2412	300-2417	300-2412
C31	300-2413	300-2418	300-2413
Z2	320-0053	320-0056	320-0053
Z3	320-0051	320-0058	320-0051
HOR.YOKE	320-0052	320-0057	320-0052
FLY-BACK	410-1007	410-1008	410-1007
R5	330-2068	330-2068	330-3068
* V YOKE L	YEL	BLU	YEL
* V YOKE K	BLU	RED	BLU
* H YOKE H	RED	YEL	RED

*COMPONENTS NOT LOADED FOR 7456-2	
R9,10,40	330-2047
R1,	331-2010
R11	330-1022
R12	337-3012
R44	330-1047
C3	300-1820
C15	300-4022
Q5	375-1014
Q2	375-1056
D4,10	380-1001
C32	300-1047
Q1	375-1012

IC. LOCATION	W. L. PART NO.	30V
L1	376-0260	1
L2	376-0239	5
L3	376-0261	13

NOTES:
1. CONNECT G2 LEAD TO PIN B UNLESS UNABLE TO ACHIEVE RASTER CUT OFF.

COMP.	W. L. PART No.
R2	330-3022
R3,37	330-3097
R4	330-3012
R14	330-3010
R9	330-2068
R4,39,44	330-1047
R8	330-2015
R10,40	330-2047
R12	337-3012
R13	337-1056
R15	336-1019
R16,27,38	330-5010
R17,21	330-2022
R1	331-3010
R30	330-3068
R20	330-5022
R11	330-1022
R22	330-4022
R23	330-4015
R24	336-1021
R25	331-0022
R26	330-6012
R28	336-0031
R29	330-5027
R31	330-6047
R32	330-2018
R18,33	336-1020
R39	332-0067
R35	336-1015
R36	330-1068
R7	332-1033
R41	330-4027
R42	330-4018
D7	380-2086
D2	380-4000
D3	380-2091
D5,7	380-3009
D6,9	380-3010
D8	380-3012
D4,10	380-1001
E1	320-0054
R43	330-4068

COMP.	W. L. PART No.
C1, 24	300-3006
C2,10,27	300-3009
C3	300-1820
C9	300-1470
C12	300-2415
C26,29	300-2247
C14	300-2310
C16,38	300-1915
C19	300-3010
C21,23	300-1978
C22	300-4000
C25	300-2414
C28	300-2418
C4,8,17	300-1912
C5	300-2215
C6,11,20	300-3062
C7	300-1033
C13	300-1946
C32	300-1047
Q1	375-1062
Q2	375-1056
Q3	375-1027
Q4	375-1057
Q5	375-1019
C15	300-4022
T1	410-1006

E-REV 7456	E-REV 7456-1	E-REV 7456-2
5	5	1

NO.	REVISION	DWR	CHK	APP'D
9/6	DWR # E398	10-21-77		
1/6	REVISED PER ECN # 7776	12-10-77		
2/1	REVISED PER ECN # 8519	2-28-78		
3/2	REVISED PER ECN # 9161	4-28-78		
4/2	REVISED PER ECN # 10661	7-24-78		
5/2	REVISED PER ECN # 10930	8-28-78		
6/3	ECN 11117	5-25-79		
7/3	REVISED PER ECN # 13020	10-17-79		
8/3	REVISED PER ECN # 13538	10-30-79		
9/3	REVISED PER ECN # 14938	10-24-80		
10/3	REVISED PER ECN # 15707	2-3-80		
11/3	REVISED PER ECN # 17052	12-2-80		
12/3	REVISED PER ECO # 19044	6/4/81		
13/5	REVISED PER ECO # 24909	2/6/82		

QTY.	ITEM	NEXT ASSY.	WANG PART NO.	DRAWING NO.	DESCRIPTION

WANG LABORATORIES, INC. TEWKSBURY, MASS. U.S.A.

MATERIAL

FINISH

MODEL NO. 9" & 12" WANG MONITOR
SEE ENGRG SPECIFICATIONS No.

TOL EX AS NOTED
XX ± FRAC ±
XXX ± ANG ± FINISH √
SCALE 1/1 SHT OF

	BY	DATE	APPROVED BY	DATE
DWN	S.F.	8-31-77	E ENGR R.Solem	10-21-77
CHK	G.D.	10-21-77	M ENGR	
			MFG ENGR	

TITLE: ELECTRONICS FOR 9" AND 12" MONITOR

SEE CHART | D | 7456 | 12
WANG PART NUMBER | SIZE | DRAWING NUMBER | REV

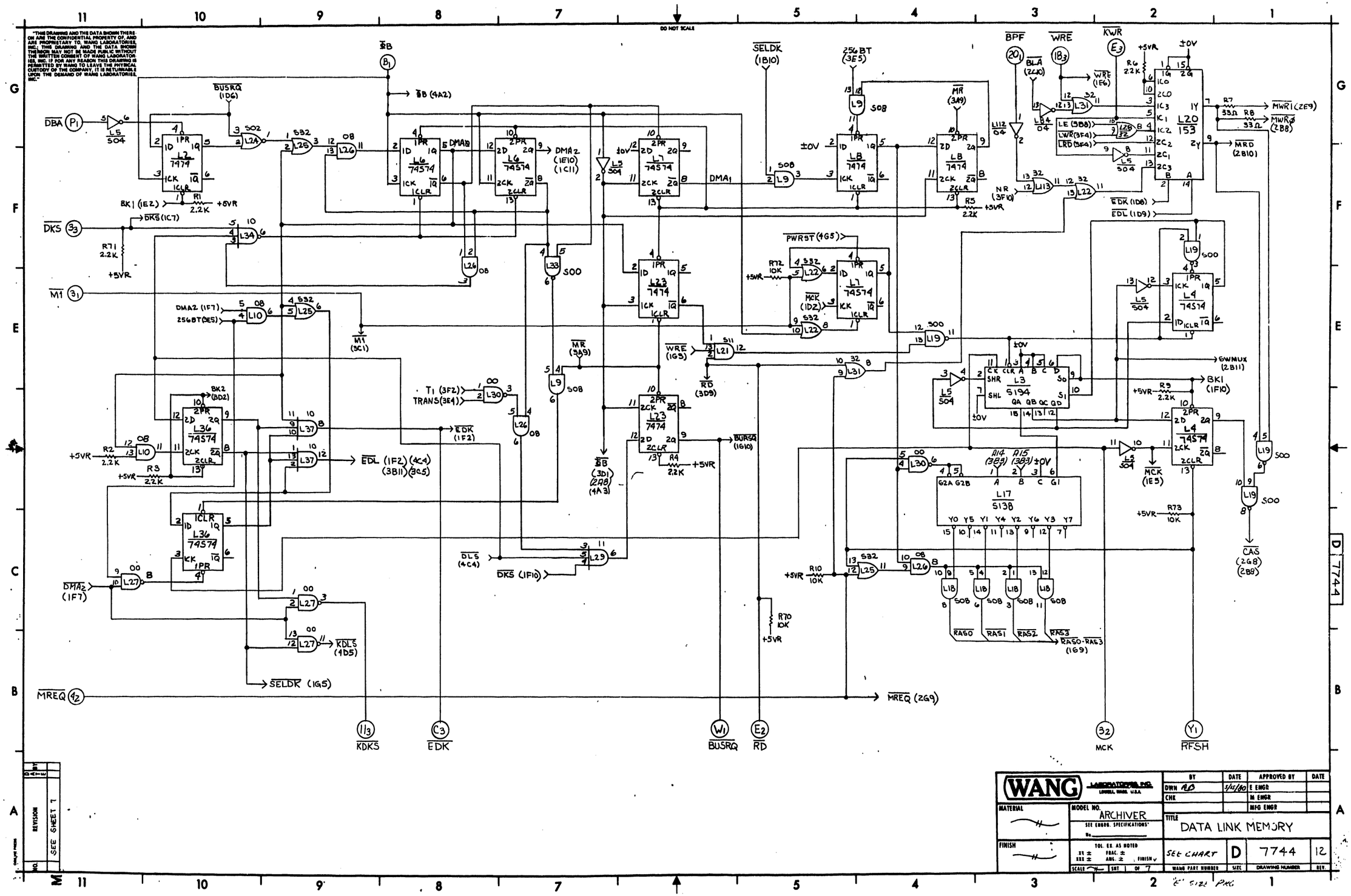

"THIS DRAWING AND THE DATA SHOWN THEREON ARE THE CONFIDENTIAL PROPERTY OF, AND ARE PROPRIETARY TO, WANG LABORATORIES, INC. THIS DRAWING AND THE DATA SHOWN THEREON MAY NOT BE MADE PUBLIC WITHOUT THE WRITTEN CONSENT OF WANG LABORATORIES, INC. IF FOR ANY REASON THIS DRAWING IS PERMITTED BY WANG TO LEAVE THE PHYSICAL CUSTODY OF THE COMPANY, IT IS RETURNABLE UPON THE DEMAND OF WANG LABORATORIES, INC."

NO.	REVISION	DATE	BY
	SEE SHEET 7		

WANG LABORATORIES, INC. LOWELL, MASS. U.S.A.

	BY	DATE	APPROVED BY	DATE
DWN	RB	5/15/80	E ENGR	
CHK			M ENGR	
			MFG ENGR	

MATERIAL

MODEL NO. ARCHIVER

SEE ENGRG. SPECIFICATIONS

No.

FINISH

TOL. EX. AS NOTED
XX ± FRAC. ±
XXX ± ANG. ± FINISH ✓

SCALE — SHT 1 OF 7

TITLE DATA LINK MEMORY

WANG PART NUMBER	SIZE	DRAWING NUMBER	REV.
SEE CHART	D	7744	12

"E" SIZE PKG

D 7744

"THIS DRAWING AND THE DATA SHOWN THEREON ARE THE CONFIDENTIAL PROPERTY OF, AND ARE PROPRIETARY TO, WANG LABORATORIES, INC. THIS DRAWING AND THE DATA SHOWN THEREON MAY NOT BE MADE PUBLIC WITHOUT THE WRITTEN CONSENT OF WANG LABORATORIES, INC. IF FOR ANY REASON THIS DRAWING IS PERMITTED BY WANG TO LEAVE THE PHYSICAL CUSTODY OF THE COMPANY, IT IS RETURNABLE UPON THE DEMAND OF WANG LABORATORIES, INC."

DO NOT SCALE

RAS0-RAS3 (1B3)

DI0 DI1 DI2 DI3 DI4 DI5 DI6 DI7 DI8

L67 L71 L75 L63 L59 L55 L51 L47 L43 MK4116

L68 L72 L76 L64 L60 L56 L52 L48 L44 MK4116

L69 L73 L77 L65 L61 L57 L53 L49 L45 MK4116

L70 L74 L78 L66 L62 L58 L54 L50 L46 MK4116

L90 LS244 — DO D1 D2 D3 D4 D5 D6 D7

L79 LS373 — DO00 DO01 DO02 DO03 DO04 DO05 DO06 DO07

L120 2716 — A0 A1 A2 A3 A4 A5 A6 A7 A8 A9 A10

L116 S157 — MA0 MA2 MA3 MA4 MA5 MA6

L117 S157 — A6 A13 A5 A12 A4 A11

L115 LS74 — L115 LS74

L125 L32 L33 L30 L14 L22 L75 L1

R11 33Ω DI0 · R12 33Ω DI1 · R13 33Ω DI2 · R14 33Ω DI3 · R15 33Ω DI4 · R16 33Ω DI5 · R17 33Ω DI6 · R18 33Ω DI7 · R19 33Ω DI8

R21 33Ω RAS1 · R22 33Ω RAS2 · R23 33Ω RAS3 · R24 33Ω CAS (1C1) · R25 2.2K +5VR · R90 22Ω MWR0 (1G1) · R91 2.2K +5VR

R32 33Ω MA3 · R33 33Ω MA2 · R30 33Ω MA1 · R31 33Ω MA0 · R28 33Ω MA9 · R29 33Ω MA8 · R26 33Ω MA7 · R27 33Ω MA6 · R34 33Ω MA5 · R35 33Ω MA4 · R36 33Ω MA5 · R37 33Ω MA4 · R38 33Ω MA6

C1 C2 C21 C22 C41 C42 C61 C62 5.6mf 35V · C3 C4 C5 C6 C7 C8 C9 C10 C11 C12 C23 C24 C25 C26 C27 C28 C29 C30 C31 C32 C43 C44 C45 C46 C47 C48 C49 C50 C51 C52 C63 C64 C65 C66 C67 C68 C69 C70 C71 1mf · C82 C83 C84 .1mf

L118 27Ω · L119 · L32 125 · L33 500 · L30 00 · L14 32 · L22 32 · L75 1 · L1 75

PARE (2A9) · MWR1 (1G1) · A0-A13 (3B3) · D0-D7 (3A5) · A11-A15 (3B1.) · RD (1E6) · MREQ (1B4) · PROMSW (3D11) · SWMUX (1E1) · BLA (Y3) · BLA (1G3) · MRD (1G1) · ⌀B (1D7) · SWMUX (3E11) · PARE (3A5) · PARE (2F11) (3C7) · PROMCS (W3) · MWAIT (21) · SWMUX (12) · PARE (13)

+5V +12V -5V ±0V

SEE SHEET 7

REVISION	BY	DATE	NO.
ONLINE PHASE			

WANG LABORATORIES, INC. LOWELL, MASS. U.S.A.

	BY	DATE	APPROVED BY	DATE
	DWN A.B	5/15/80	E ENGR	
	CHK		M ENGR	
			MFG ENGR	

MATERIAL

MODEL NO. ARCHIVER — SEE ENGRG SPECIFICATIONS — No.

TITLE DATA LINK MEMORY

FINISH

TOL EX. AS NOTED: .XX ± FRAC ± .XXX ± ANG ± FINISH √

SCALE — SHT 2 OF 7 — SEE SHEET 1 — D — 7744 — 12

WANG PART NUMBER — SIZE — DRAWING NUMBER — REV

E SIZE

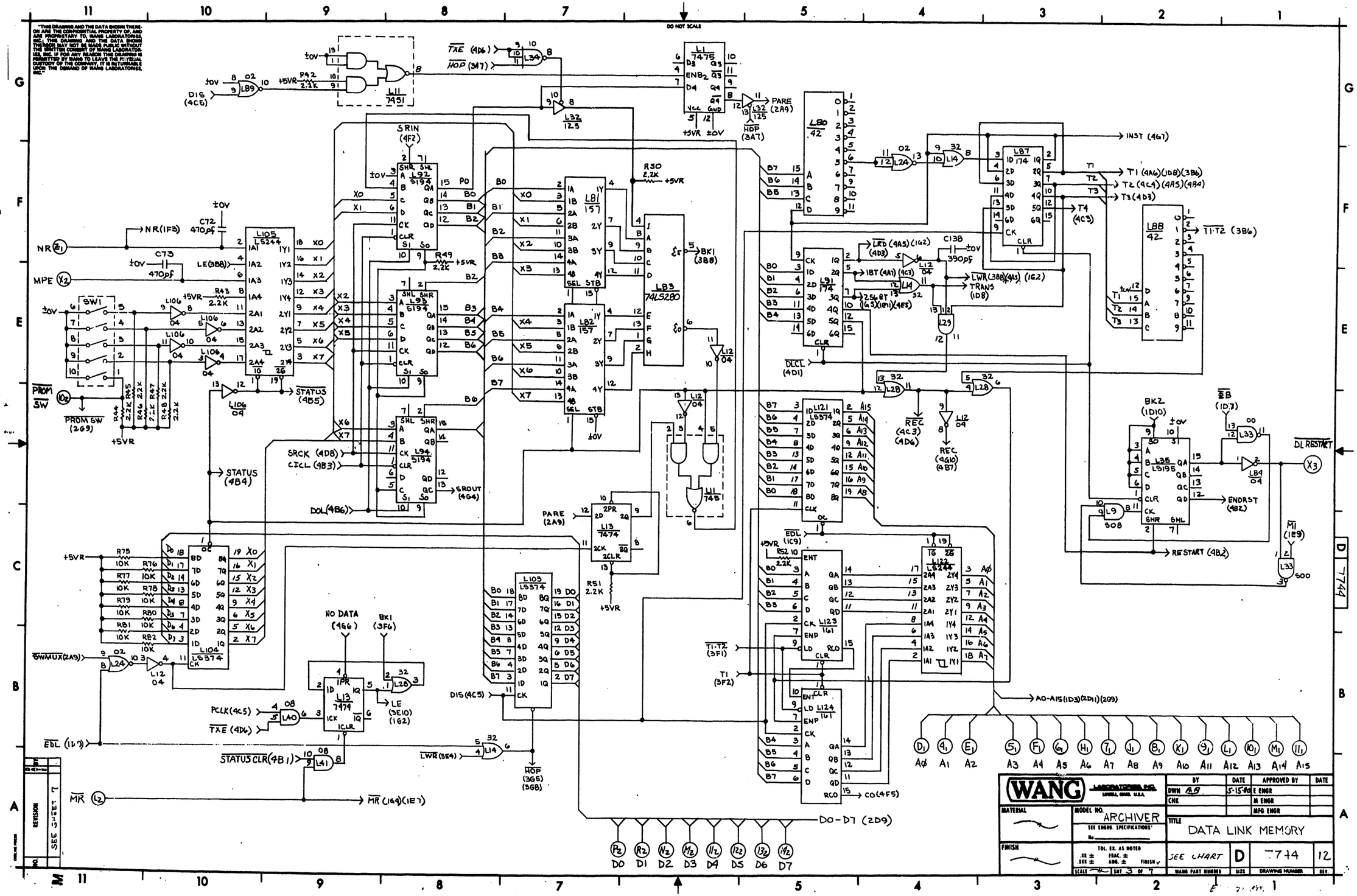

DO NOT SCALE
WANG LABORATORIES, INC.
LOWELL, MASS. U.S.A.
MODEL NO. ARCHIVER
SEE ENGRG. SPECIFICATIONS
TITLE DATA LINK MEMORY
SEE CHART
D
7744
12
SHT 3 OF 7
DWN
5-15-80
E ENGR
M ENGR
MFG ENGR
MATERIAL
FINISH
SCALE
SEE SHEET 7
REVISION

"THIS DRAWING AND THE DATA SHOWN THEREON ARE THE CONFIDENTIAL PROPERTY OF, AND ARE PROPRIETARY TO, WANG LABORATORIES, INC. THIS DRAWING AND THE DATA SHOWN THEREON MAY NOT BE MADE PUBLIC WITHOUT THE WRITTEN CONSENT OF WANG LABORATORIES, INC. IF FOR ANY REASON THIS DRAWING IS PERMITTED BY WANG TO LEAVE THE PHYSICAL CUSTODY OF THE COMPANY, IT IS RETURNABLE UPON THE DEMAND OF WANG LABORATORIES, INC."

DO NOT SCALE

CK SHIELD #1 (±0V) — 19
CK SHIELD #2 (±0V) — 21 — ±0V
CK — 20

R53 39K, C74 .0015mF, R54 22K, C75 100pF, R74 22K, +5VR
SRIN (4F2)
L85 9602 (CLR2, CLR1)
INST (3G3)
L27 00, L32 08, L25, L40 08 → BK4 (4D2)
NO DATA (3B9)
REC (3D4)
PWRST (V3) → PWRST (1F5)
SROUT (3D8) → L40
TXE (3E7)
R57 2.2K, R58 270Ω, R59 100Ω, R60 390Ω, R61 91Ω
L125 113 215
K3 +GA (INC.), L3 +GB, S3 -RA, G3 -RB (BNC)
DLE (14)
L126 75107A, R62 2.2K, L95 502, RXE (4B6), SRIN (3G8) (4G9) (4B11)
CB0, CB1 .05μF, 15μF 20V(T), ±0V, -5V

L128 74161 (ENPENT A B C D CK, LD, CLR, QA QB QC QD RCO)
L112 04
R55 2.2K, R56 2.2K, R63 2.2K, R64 2.2K, R65 2.2K, RB3 2.2K, RB6 2.2K, R69 2.2K
L111 7474, L130 7474, L99 908
RXE (4F2)
Te (4C8), CO (3A9)
L100 7474, L86 7474, L97 7474
25687 (3B5)
KDL5 (1B9), DL5 (1C8)
L29 11, L30 00, L39, L38 30, L89 02
BK4 (4G6), LRD (3F4), EDL (1D9), T2 (3F2), T3 (3F2), T4 (3F3)
ENDIT (4A6), IBT (3F4)
C79 220pF
DLCL (3E5)
REC (3D4), TXE (3B10) (3G8), TRCL (4B5), CTCL (3D9)
STATUS (3D9), STATUS (3D10), T2 (3F2), RESTART (3C2), ENDRST (3D1), EB (1D7), STATUS CLR (3A10)

XTAL 17.1 MHz
R66 330Ω, R67 330Ω, C78 680pF
L127 S04, L95 502, L98 500, L99 08
GRCK (3D9)
TP2, TP1
L109 S194 (SR0, SR1, SHR, SHL, QA QB QC QD)
R68 2.2K
L108 161 (ENP, ENT, CK, CLR, LD, RCO, QA QB QC QD)
L84 04, Tf (4F3)
L110 S138 (G1, G2A, 2GA, C, B, A, Y0 Y1 Y2 Y3 Y4 Y5 Y6 Y7)
DIS (3B8) (3G10), PCLK (3B10)
L41 08, L95 508
REC (3D4), DOL (3C9)
SRIN (4F2), L96 532
STATUS (3D9)
L101 153 (1G 2G, 1C0 1C1 1C2 1C3, 2C0 2C1 2C2 2C3, 1Y, 2Y, A, B)
Ti (3F2), T2 (3F2), ENDIT (4C3), IBT (3E4), L98 500, L99 508
LRD (3F4), LWR (3E4)

REVISION LETTER — SEE SHEET 7

WANG LABORATORIES, INC. LOWELL, MASS. U.S.A.	BY	DATE	APPROVED BY	DATE
	DWN RB	5-15-80	E ENGR	
	CHK		M ENGR	
MATERIAL	MODEL NO. ARCHIVER		MFG ENGR	
	SEE ENGRG. SPECIFICATIONS No.	TITLE DATA LINK MEMORY		
FINISH	TOL UN AS NOTED .XX ± FRAC ± .XXX ± ANG. ± FINISH √	SEE CHART	D	7744	12
	SCALE — SHT 4 OF 7	WANG PART NUMBER	SIZE	DRAWING NUMBER	REV

D 7744

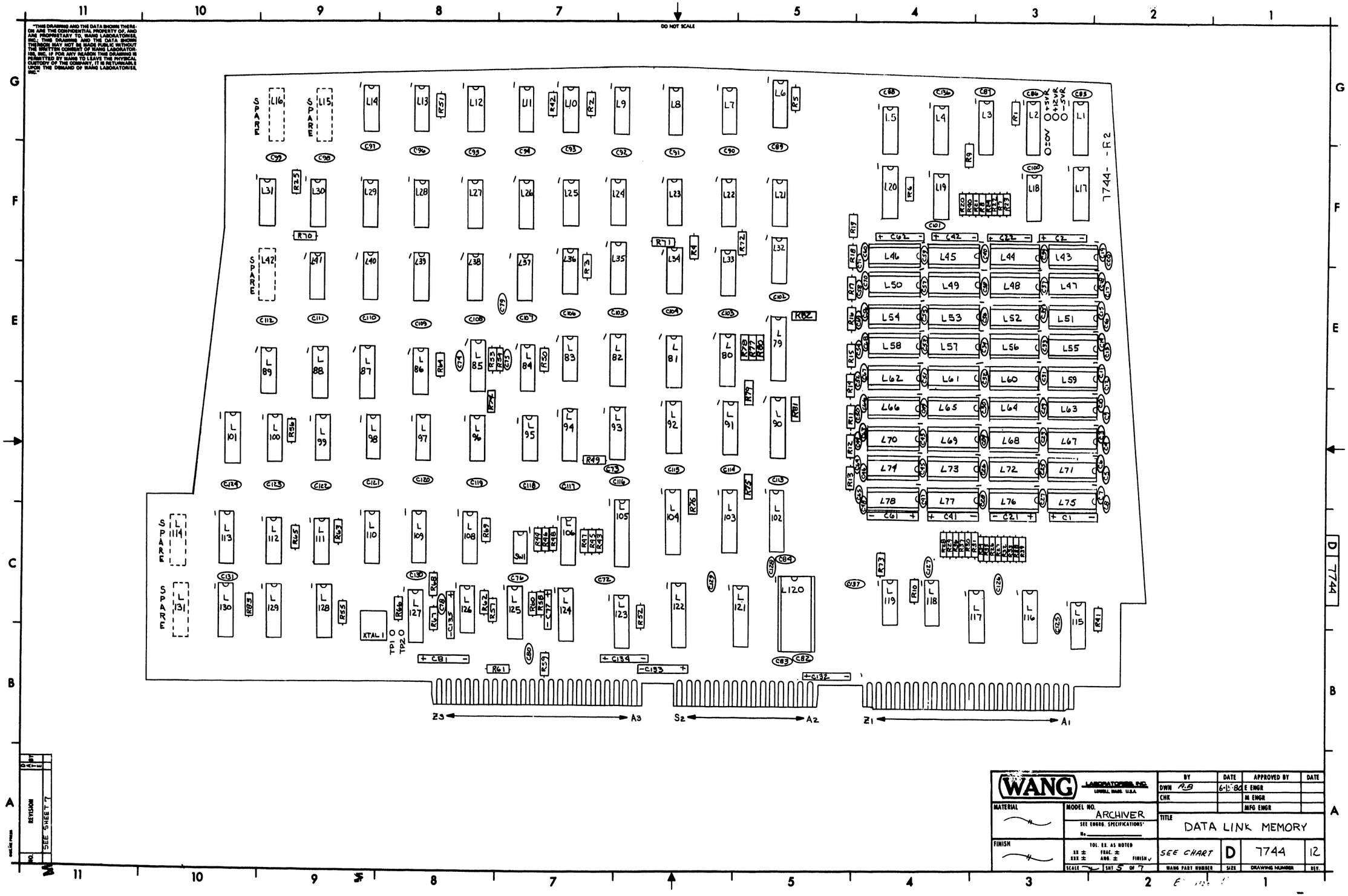
DO NOT SCALE
SPARE
XTAL 1
TP1
TP2
Z3
A3
S2
A2
Z1
A1
7744-R2
D 7744
WANG LABORATORIES, INC.
LOWELL, MASS. U.S.A.
BY
DATE
APPROVED BY
DATE
DWN A.B
6-15-80
E ENGR
CHK
M ENGR
MFG ENGR
MATERIAL
MODEL NO.
ARCHIVER
SEE ENGRG. SPECIFICATIONS
No.
TITLE
DATA LINK MEMORY
FINISH
TOL. EX. AS NOTED
.XX ± FRAC. ±
.XXX ± ANG. ± FINISH
SCALE
SHT 5 OF 7
SEE CHART
D
7744
12
WANG PART NUMBER
SIZE
DRAWING NUMBER
REV.
NO.
REVISION
SEE SHEET 7

"THIS DRAWING AND THE DATA SHOWN THEREON ARE THE CONFIDENTIAL PROPERTY OF, AND ARE PROPRIETARY TO, WANG LABORATORIES, INC.; THIS DRAWING AND THE DATA SHOWN THEREON MAY NOT BE MADE PUBLIC WITHOUT THE WRITTEN CONSENT OF WANG LABORATORIES, INC. IF FOR ANY REASON THIS DRAWING IS PERMITTED BY WANG TO LEAVE THE PHYSICAL CUSTODY OF THE COMPANY, IT IS RETURNABLE UPON THE DEMAND OF WANG LABORATORIES, INC."

DO NOT SCALE

210 = 209 + 377 OR 378						
210	209	L43, 47, 51, 55, 59, 63, 67, 71, 75	L44, 48, 52, 56, 60, 64, 68, 72, 76,	L45, 49, 53, 57, 61, 65, 69, 73, 77	L46, 50, 54, 58, 62, 66, 70, 74, 78	L120
7744-A	7744	377-0345				
7744-1A	7744-1	377-0345	377-0345			
7744-2A AWS-2266	7744-2	377-0345	377-0345	377-0345		
7744-2B	7744-2					378-4302
7744-3A	7744-3	377-0345	377-0345	377-0345	377-0345	
7744-B	7744	377-0345				378-4399
7744-3B	7744-3	377-0345	377-0345	377-0345	377-0345	378-4256
7744-3C	7744-3	377-0345	377-0345	377-0345	377-0345	378-4251
7744-3D	7744-3	377-0345	377-0345	377-0345	377-0345.	378-4417

NO.	REVISION	DATE	BY
	SEE SHEET #7		

BRUNING 40-5253 48997-2

WANG — WANG LABORATORIES, INC. LOWELL, MA U.S.A.

	BY	DATE	APPROVED BY	DATE
DWN	[signature]	3-8-83	E ENGR	
CHK			M ENGR	
			MFG ENGR	

MATERIAL

MODEL NO. H0133A ARCHIVER

SEE ENGRG SPECIFICATIONS No.

TITLE DATA LINK MEMORY

FINISH

TOL EX. AS NOTED
XX ± FRAC ±
XXX ± ANG ± FINISH ✓

SCALE 1/4 SHT 6 OF 7

WANG PART NUMBER	SIZE	DRAWING NUMBER	REV
SEE CHART	D	7744	12

D 7744

"THIS DRAWING AND THE DATA SHOWN THEREON ARE THE CONFIDENTIAL PROPERTY OF, AND ARE PROPRIETARY TO, WANG LABORATORIES, INC. THIS DRAWING AND THE DATA SHOWN THEREON MAY NOT BE MADE PUBLIC WITHOUT THE WRITTEN CONSENT OF WANG LABORATORIES, INC. IF FOR ANY REASON THIS DRAWING IS PERMITTED BY WANG TO LEAVE THE PHYSICAL CUSTODY OF THE COMPANY, IT IS RETURNABLE UPON THE DEMAND OF WANG LABORATORIES, INC."

DO NOT SCALE

COMPONENT	TYPE	W.L. PART NO.
C1,2,21,22,41,42,61,62	5.6µf 35V(T)	300-4017
C3-20,23-40,43-60,63-71,82-84	.1µf 50V H.F. (C)	300-1930
C72,73	470pf 500V (C)	300-1470
C74	.0015µf 500V(C)	300-1907
C75	100pf 500V (C)	300-1100
C76,80,85-131,136,137	.047µf 50V (C)	300-1966
C77,81,132-135	15µf 20V (T)	300-4022
C78	680pf 500V(C)	300-1680
C79	220pf 500V(C)	300-1220
C138	390pf 500V(C)	300-1390
R1-6,9,25,41-52,55-57,62-65,68,69,71,74,83	2.2K 1/4W 5%	330-3023-4B
R7,8,11-23,26-39	33Ω 1/4W 5%	330-1034-4B
R10,70,72,73,75-82	10K 1/4W 5%	330-4011-4B
R24,40	22Ω 1/4W 5%	330-1023-4B
R53	39K 1/4W 5%	330-4043-4B
R54	22K 1/4W 5%	330-4023-4B
R58	270Ω 1/4W 5%	330-2028-4B
R59	100Ω 1/4W 5%	330-2011-4B
R60	390Ω 1/4W 5%	330-2040-4B
R61	91Ω 1/4W 5%	330-1092-4B
R66,67	330Ω 1/4W 5%	330-2034-4B
XTAL	17.1 MHZ HC-18/U-1	321-0018
L43-78	16 PIN SOCKET	376-9002
L120	24 PIN SOCKET	376-9003
SW1	5POS SPST	325-1501

TYPE	LOCATION	SPARES
74S00	L98	1
7402	L24	1
	L89	1
7404	L12	1
	L106	1
	L112	2
74S04	L127	2
74C8	L10	2
	L41	1
7432	L31	2
	L113	3
7474	L2	1
7410	L119	2
74611	L21	2

I.C. LOCATION	TYPE	W.L. PART NO.
L1	7475	376-0013
L2,8,13,23,86,97,100,111,130	7474	376-0006
L3,92-94,109	74194	376-0221
L4,6,7,36	74S74	376-0202
L5,127	74S04	376-0197
L9,18,99	74S08	376-0200
L10,26,40,41	7408	376-0081
L11	7451	376-0012
L12,84,106,112	7404	376-0010
L14,22,28,31,113	7432	376-0093
L15,16,42,114,151	SPARES	
L17,110	74S138	376-0298
L19,33,98	74S00	376-0228
L20	TMS2716	SEE CHART
L21	74S11	376-0237
L24,89	7402	376-0016
L25,96	74S32	376-0205
L27,30	7400	376-0002
L29	7411	376-0194
L32	74125	376-0324
L34,37,119	7410	376-0003
L35	74LS194A	376-0416
L38	7430	376-0031
L39	7420	376-0004
L43-78	MK4116	SEE CHART
L79	74LS373	376-0310
L80,88	7442	376-0008
L81,82	74157	376-0082
L83	74LS280	376-0242
L85	9602	376-0104
L87,91	74174	376-0098
L90,102,105,122	74LS244	376-0288
L95	74S02	376-0199
L101	74153	376-0048
L103,104,121	74LS374	376-0286-1
L108,123,124,128,129	74161	376-0094
L115	74LS74	376-0155
L116,117	74S157	376-0217
L118	7427	376-0125
L120	2716	SEE CHART
L125	75113	376-0256
L126	75107	376-0196

MNEMONICS	COORDINATE
A0-A15	3A1-3A4
$\overline{BLA}$	2C11
$\overline{BPF}$	1G3
$\overline{BUSRQ}$	1B6
$\overline{CK}$	4A11
CK SHIELD*1	4F11
CK SHIELD*2	4F11
$\overline{DBA}$	1G11
$\overline{DKS}$	1F11
DLA	4G1
$\overline{DL\ RESTART}$	3D1
D0-D7	3A5,3A6
$\overline{EDK}$	1B8
+GA	4G1
+GB	4G1
$\overline{\phi B}$	1G8
$\overline{KDKS}$	1B9
$\overline{KWR}$	1G2
MCK	1B2
$\overline{MI}$	1E11
MPE	3E11
$\overline{MR}$	3A11
$\overline{MREQ}$	1B11
NR	3F11
PARE	2A9
$\overline{PROM\ CS}$	2A8
$\overline{PROM\ SW}$	3D11
$\overline{PWRST}$	4G5
-RA	4G1
-RB	4G1
$\overline{RD}$	1B5
$\overline{RFSH}$	1B2
SWMUX	1E10
$\overline{WRE}$	1G5

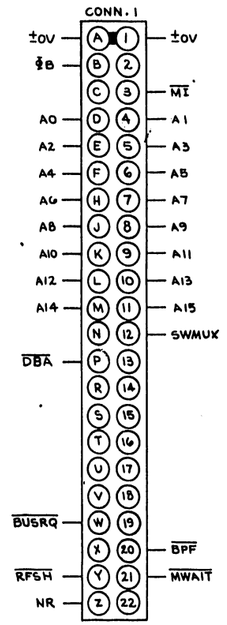

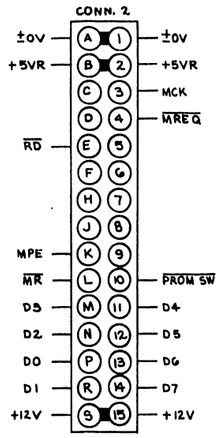

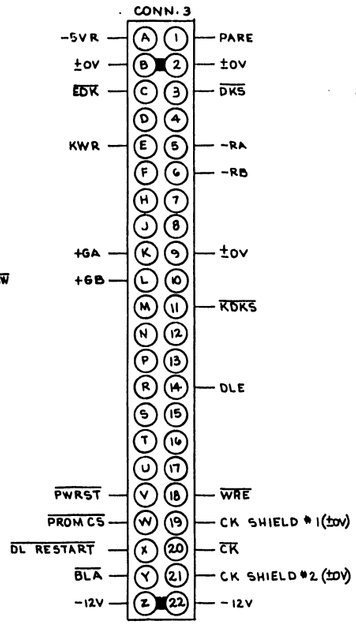

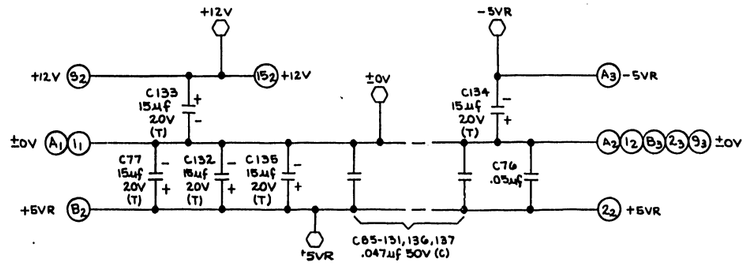

NOTES:
1) ALL RESISTORS ARE 1/4W 5% UNLESS OTHERWISE SPECIFIED.

7744 E-REV	7744-1 E-REV	7744-2 E-REV	7744-3 E-REV
1	1	1	1

NO.	REVISION	DRAWN BY	CHECKED BY
0	ORIGINATED PER ECO#E9322	A.B. 5-15-80	10-21-80
1	REVISED PER ECN 10171 ECO#16443		
2	REVISED PER ECO#23011		
3	REVISED PER ECO#18123	H.K. 5-23-81	FSS 6-24-81
4	REVISED PER ECO#19733		JEP 8-4-81
5	REVISED PER ECO#19789		
6	REVISED PER ECO#22827	D.S. 4-28-82	
7	REVISED PER ECO#23760	Kwy 7-27-82	
8	REVISED PER ECO#24530		MDC 9-23-82
9	REVISED PER ECO#24756		LEM 10-21-82
10	REVISED PER ECO#21555, 23512, 25506		MDC 4-19-83
11	REVISED PER ECO# 26975		SLS 5-3-83
12	REVISED PER ECO# 26012, 28042		MDC 8-8-83

	BY	DATE	APPROVED BY	DATE
DWN	L.B.B.	11/3/80	E ENGR	12/1/80
CHK		12/3/80	M ENGR	
			MFG ENGR	

WANG LABORATORIES, INC. LOWELL, MASS. U.S.A.

MATERIAL —

FINISH —

MODEL NO. ARCHIVER

SEE ENGRG SPECIFICATIONS

No.

TOL. EX. AS NOTED
.XX ± FRAC ±
.XXX ± ANG ± FINISH √

SCALE — SHT 7 OF 7

TITLE DATA LINK MEMORY

SEE CHART | D | 7744 | 12

WANG PART NUMBER | SIZE | DRAWING NUMBER | REV.

D 77744

"THIS DRAWING AND THE DATA SHOWN THEREON ARE THE CONFIDENTIAL PROPERTY OF, AND ARE PROPRIETARY TO, WANG LABORATORIES, INC. THIS DRAWING AND THE DATA SHOWN THEREON MAY NOT BE MADE PUBLIC WITHOUT THE WRITTEN CONSENT OF WANG LABORATORIES, INC. IF FOR ANY REASON THIS DRAWING IS PERMITTED BY WANG TO LEAVE THE PHYSICAL CUSTODY OF THE COMPANY, IT IS RETURNABLE UPON THE DEMAND OF WANG LABORATORIES, INC."

DO NOT SCALE

VARIATION CHART

MECH ASSY						
DWG. N°	W.P.N	COUNTRY	JUMPERS Y Axis		MOD. N°	R40
D-06841-0017	271-1151	SWEDISH	BEE	5F6	928	R40
D-06841-0018	271-1152	GERMAN	D	7	928	R40
D-06841-0019	271-1153	UNITED KINGDOM	〃	〃	928	
D-06841-0020	271-1157	NORWEGIAN	BED	5E7	928	R40
D-06841-0021	271-1158	AZERTY	A&C	8-8	928	R40
D-06841-0022	271-1159	NETHERLANDS	E	6	928	R40
D-06827-0511	271-1166	GREEK/LATIN	〃	〃	2236	
D-06827-0512	271-1167	CYRILLIC/LATIN	〃	〃	2236	
D-06827-0504	271-1168	SWISS/FRENCH	〃	〃	2236	
D-06827-0505	271-1169	UNITED KINGDOM	〃	〃	2236	
D-06827-0506	271-1170	NETHERLANDS	〃	〃	2236	
D-06827-0507	271-1171	NORWEGIAN	〃	〃	2236	
D-06827-0508	271-1172	SWISS/GERMAN	〃	〃	2236	
D-06827-0509	271-1173	AZERTY	〃	〃	2236	
D-06827-0510	271-1174	GERMAN	〃	〃	2236	
D-06827-0513	271-1175	SWEDISH	〃	〃	2236	
D-06841-0035	271-1187	DANISH	D	7	928	R40
D-06841-0036	271-1189	HUNGARIAN	D	7	928	R40
D-06841-0035	271-1190	SWISS/GERMAN	D	7	928	R40
D-06841-0024	271-1192	FINNISH	D	7	928	R40
D-06841-0023	271-1191	SWISS/FRENCH	D	7	928	R40
D-06841-0037	271-1188	ITALIAN	C	8	928	R40
D-06841-0039	271-1185	CANADIAN	〃	〃	928	
D-06841-0040	271-1122	U.S.	〃	〃	928	
	271-1197	DVORAC	B			R40

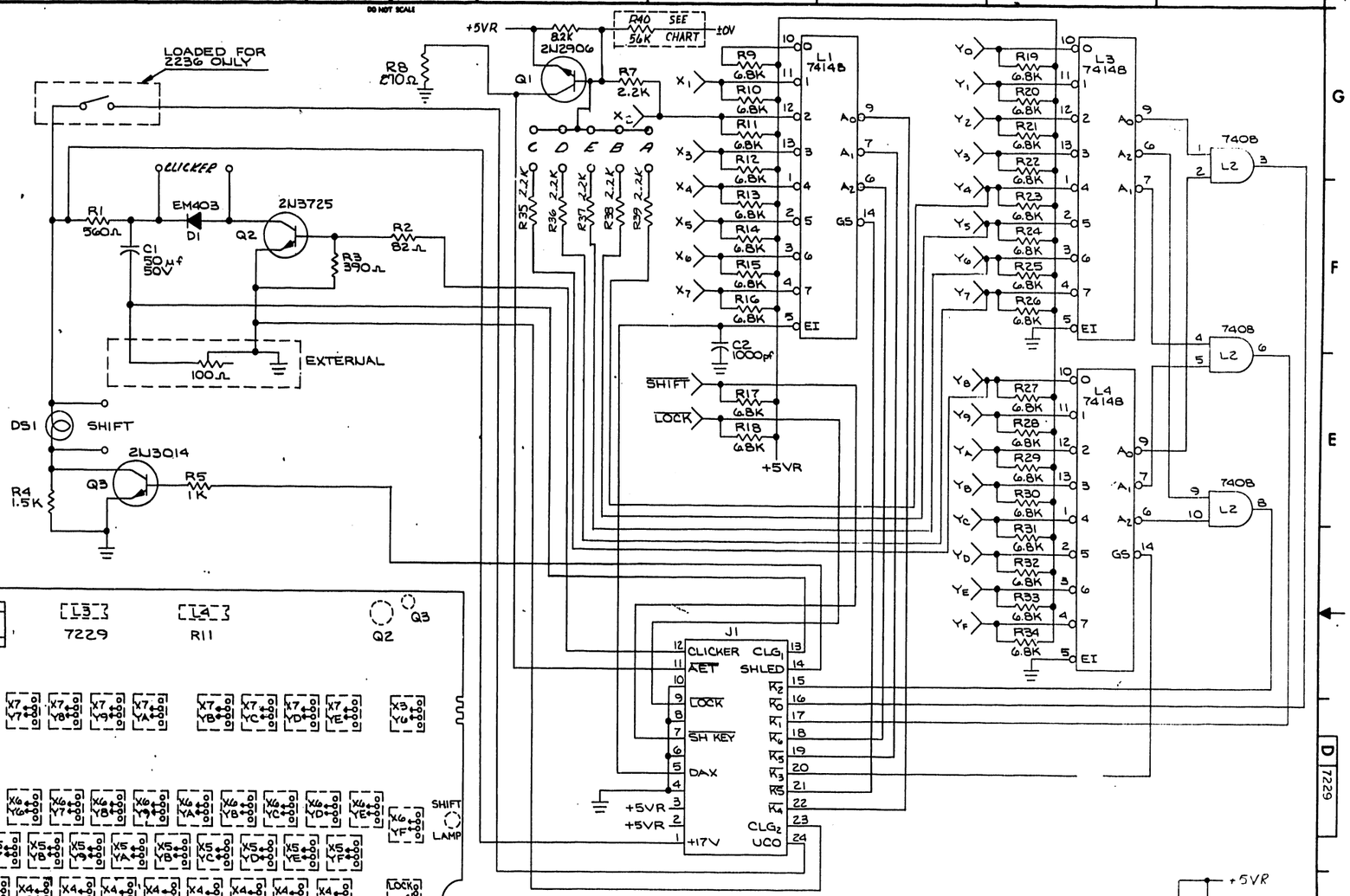

E-REV. 2

REVISION	BY	DATE
0 ORIG RLS		
1 REVISED PER ECN# 13011 ADD'D: 271-1187		10.22.79
2 REVISED PER ECO# 18397 ADD'D: 271-1189		5.1.81

	BY	DATE	APPROVED BY	DATE
DWN	J. WOLLIN	3/7/79	E ENGR	5/1/81
CHK	SD	3/7/79	M ENGR	
QTY	1		MFG ENGR	

WANG LABORATORIES, INC. LOWELL, MASS. U.S.A.

MATERIAL —

MODEL NO. SEE CHART

SEE ENGRG. SPECIFICATIONS No. ES-12601

FINISH —

TOL. EX. AS NOTED .XX ± FRAC. ± .XXX ± ANG. ± FINISH √

SCALE NONE SHT 1 OF 1

TITLE W. S. KEYBOARD

WANG PART NUMBER 210-7229 | SIZE D | DRAWING NUMBER 7229 | REV 2

E SIZE PLOT

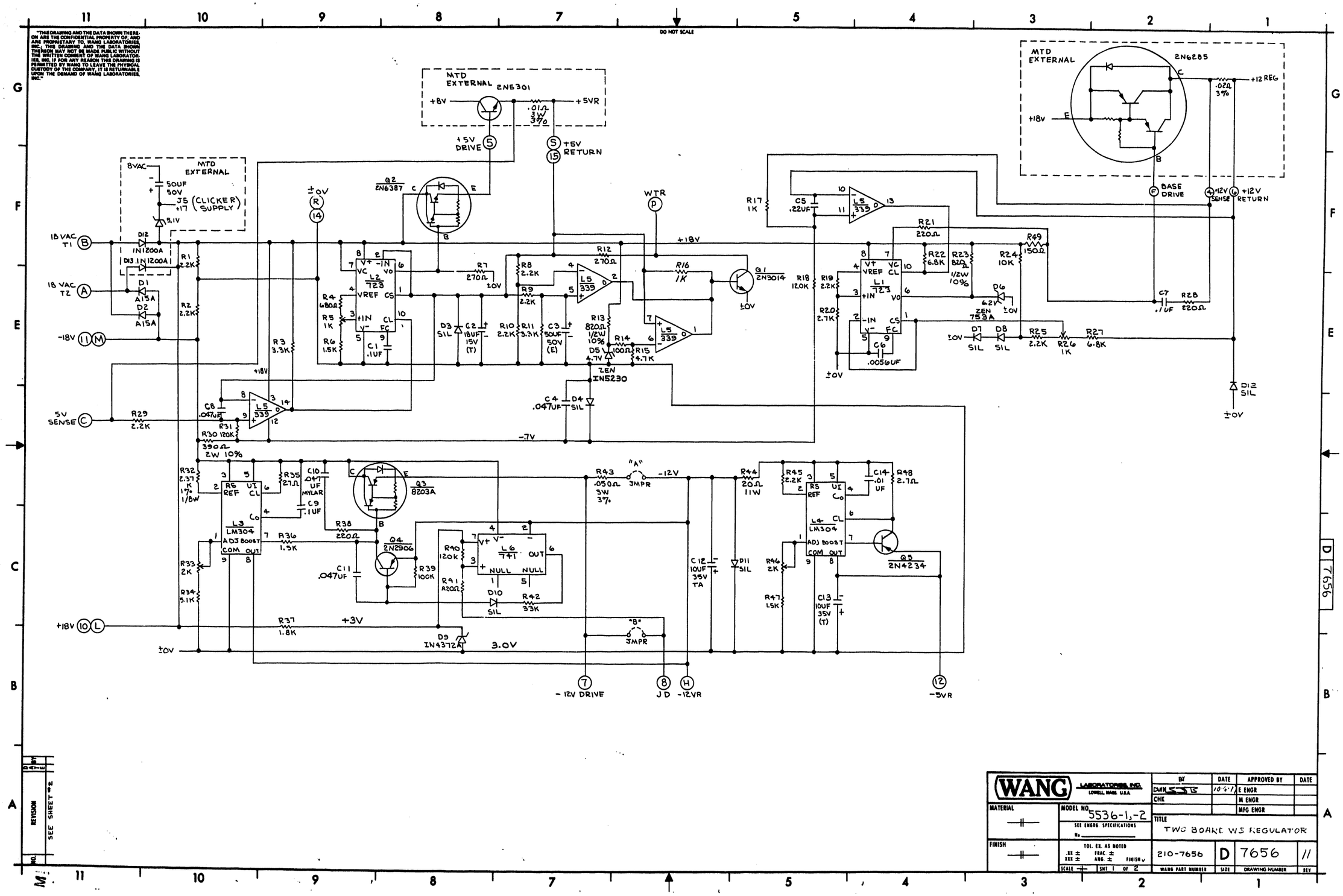

"THIS DRAWING AND THE DATA SHOWN THEREON ARE THE CONFIDENTIAL PROPERTY OF, AND ARE PROPRIETARY TO, WANG LABORATORIES, INC.; THIS DRAWING AND THE DATA SHOWN THEREON MAY NOT BE MADE PUBLIC WITHOUT THE WRITTEN CONSENT OF WANG LABORATORIES, INC. IF FOR ANY REASON THIS DRAWING IS PERMITTED BY WANG TO LEAVE THE PHYSICAL CUSTODY OF THE COMPANY, IT IS RETURNABLE UPON THE DEMAND OF WANG LABORATORIES, INC."

WANG LABORATORIES, INC. LOWELL, MASS. U.S.A.	BY	DATE	APPROVED BY	DATE	
	DWN SSB	10-6-7	E ENGR		
	CHK		M ENGR		
			MFG ENGR		
MATERIAL	MODEL NO. 5536-1,-2	TITLE TWO BOARD WS REGULATOR			
	SEE ENGRG. SPECIFICATIONS No.				
FINISH	TOL. EX. AS NOTED .XX ± FRAC ± XXX ± ANG. ± FINISH	210-7656	D	7656	11
	SCALE — SHT 1 OF 2	WANG PART NUMBER	SIZE	DRAWING NUMBER	REV

NO.	REVISION	DATE	BY
	SEE SHEET #2		

D 7656

"THIS DRAWING AND THE DATA SHOWN THEREON ARE THE CONFIDENTIAL PROPERTY OF, AND ARE PROPRIETARY TO, WANG LABORATORIES, INC. THIS DRAWING AND THE DATA SHOWN THEREON MAY NOT BE MADE PUBLIC WITHOUT THE WRITTEN CONSENT OF WANG LABORATORIES, INC. IF, FOR ANY REASON, THIS DRAWING IS PERMITTED BY WANG TO LEAVE THE PHYSICAL CUSTODY OF THIS COMPANY, IT IS RETURNABLE UPON THE DEMAND OF WANG LABORATORIES, INC."

DO NOT SCALE

I.C. LOCATION	TYPE	W.L. NO.
L1,2	723	376-0866
L3,4	LM304	376-0139
L5	LM339	376-0240
L6	741C	376-0014

MNEMONIC	COORDINATE
BASE DRIVE	1 F2
JD	1 B6
WTR	1 F6
5V DRIVE	1 F8
5V SENSE	1 D11
+5V RETURN	1 F7
12V DRIVE	1 B7
12V RETURN	1 F1
12V SENSE	1 F2
18 VAC T_1	1 F11
18 VAC T_2	1 E11
±0V	1 F9
-5VR	1 B4
-12V	1 B6
+18V	1 B11
-18V	1 E11

COMPONENT	TYPE	W.L. NO.
R1,2,8-10,25,45	2.2K 5% 1/4W	330-3023
R3,11	3.3K 5% 1/4W	330-3034
R4	680Ω 5% 1/4W	330-2069
R5,26	1K ADJ. POT.	336-1014
R6	1.5K 5% 1/4W	330-3016
R7,12	270Ω 5% 1/4W	330-2028
R13,23	820Ω 10% 1/2W	331-2082
R14	100Ω 5% 1/4W	330-2011
R15	4.7K 5% 1/4W	330-3048
R17,16	1K 5% 1/4W	330-3011
R18,31,40	120K 5% 1/4W	330-5013
R19,29	2.2K 5% 1/4W	330-3023
R20	2.7K 5% 1/4W	330-3028
R21,28,38	220Ω 5% 1/4W	330-2023
R22,27	6.8K 5% 1/4W	330-3069
R24	10K 5% 1/4W	330-9011
R30	390Ω 10% 2W	337-2039
R32	2.37K 1% 1/8W	333-0093
R33,46	2K ADJ. POT.	336-1022
R34	5.1K 5% 1/4W	330-3052
R35	27Ω 5% 1/4W	330-1028
R37	1.8K 5% 1/4W	330-3019
R39	100K 5% 1/4W	330-5011
R41	820Ω 5% 1/4W	330-2083
R42	33K 5% 1/4W	330-4034
R43	.05Ω 3% 3W	334-0033
R44	20Ω — 11W	334-0003
R36,47	1.5K 5% 1/4W	330-3016
C1,7,9	.1UF 12V CER	300-1901
C2	18UF 15V TA	300-9018
C3	50UF 50V ELEC	300-3010
C4,8,11	.047UF 50V	300-1966
C5	.22UF 100VCER	300-1926
C6	.0056UF 500VCER	300-1915
C14	.01UF 25V CER	300-1903
C10	.047UF 100V MYL	300-2147
C12,13	10UF 35V TA	300-9032
R49	150Ω 5% 1/4W	330-2016
D1,2	A15A RECTIFIER	380-3008
D3,4,7,8,10,11,12	SILICON 30V	380-1001-R
D5	IN5230 4.7V ZEN	380-2048
D6	IN753A 6.2V ZEN	380-2062
D9	IN9372A 3.0V ZEN	380-2129
R48	2.7Ω 1/4W 5%	330-0028
Q1	2N3014	375-0017
Q2	2N6387	375-1052
Q3	B203A	375-1053
Q4	2N2906A	375-1017
Q5	2N4234	375-1024

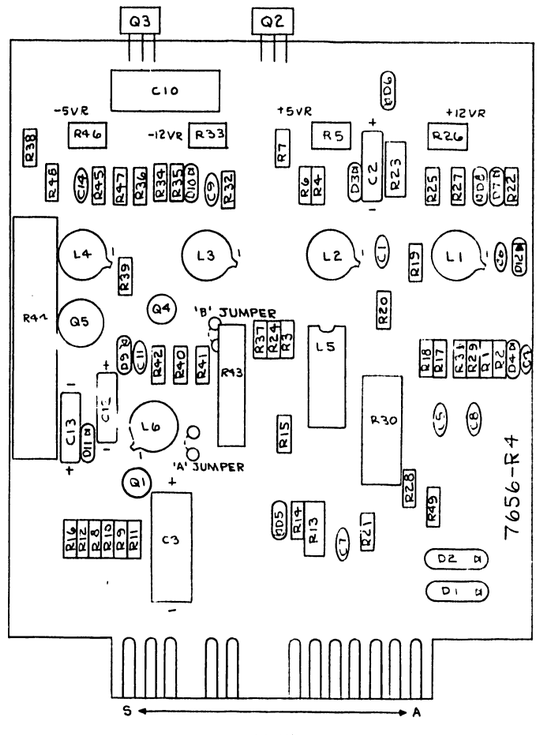

CONN.

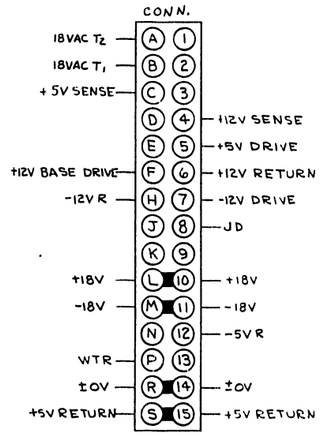

NOTE: ALL RES. 1/4W, 5% UNLESS OTHERWISE SPECIFIED.

E-REV G

DATE	SDB 10-16-79	SDB 10-16-79	SDB 10-16-79	AM 10-23-79	AM 10-23-80	TK 2-17-81	JMC/VDM 3-13-81	JMC/VDM 8-25-81	SDB 6-17-82	A.B 3.30.83	A.B 3.30.83	BSR 11-21-83
REVISION	ORIGINATED PER DWR. #E758 APP'D: [illegible]	REVISED PER ECN # 12731 APP'D: [illegible]	REVISED PER ECN # 12746 APP'D: [illegible]	REVISED PER ECN # 13129 APP'D: [illegible]	REVISED PER ECN # 16632 APP'D: [illegible]	REVISED PER ECO # 17779 APP'D [illegible]	REVISED PER DWG-E 1E310 APP'D: [illegible]	REVISED PER ECO # 20242 APP'D: [illegible]	REVISED PER ECO#23598 APP'D: [illegible]	REVISED PER ECO# 2.1505, 23507 [illegible]	REVISED PER ECO# 25561 APP'D [illegible]	REVISED PER ECO #25561 APP'D: [illegible]
NO.	0/0	1/0	2/1	3/1	4/2	5/3	6/3	7/3	8/4	9/4	10/5	11/5

	BY	DATE	APPROVED BY	DATE
	DWN [illegible]	10-16-79	E ENGR T. SOMMERS	11-27-79
	CHK [illegible]	11-27-79	M ENGR	
			MFG ENGR	

WANG LABORATORIES, INC. LOWELL, MASS. U.S.A.

MATERIAL —

FINISH —

MODEL NO. 5536-1,-2
SEE ENGRG SPECIFICATIONS
No. —

TOL ER. AS NOTED
XX ± FRAC ±
XXX ± ANG ± FINISH √
SCALE — SHT 2 OF 2

TITLE: TWO BOARD WS REGULATOR

210-7656 — WANG PART NUMBER

D — SIZE

7656 — DRAWING NUMBER

11 — REV

D 7656

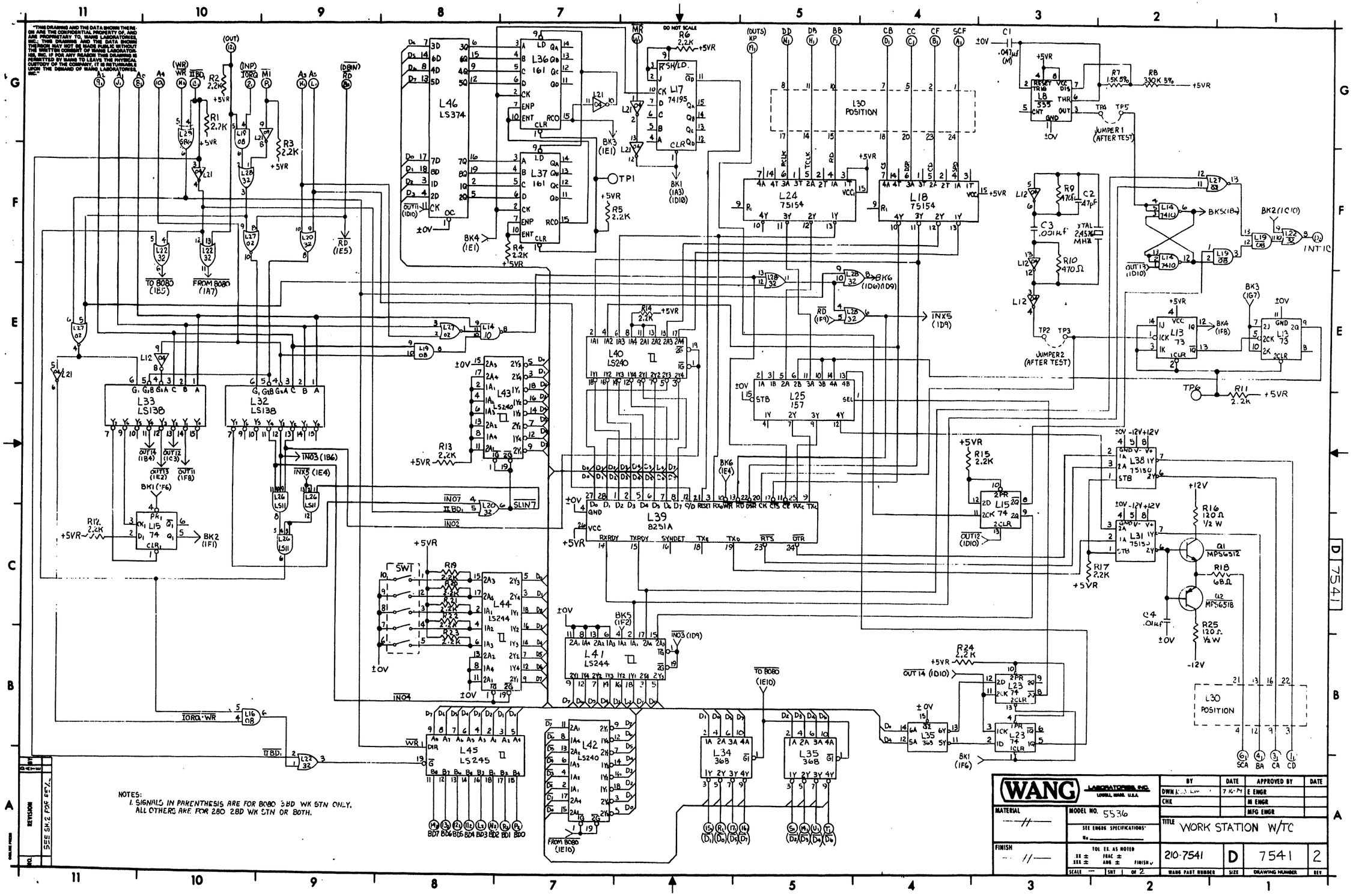

NOTES:
1. SIGNALS IN PARENTHESIS ARE FOR 8080 3BD WK STN ONLY. ALL OTHERS ARE FOR 280 2BD WK STN OR BOTH.

WANG LABORATORIES, INC. LOWELL, MASS. U.S.A.	BY	DATE	APPROVED BY	DATE
	DWN	7-16-74	E ENGR	
	CHK		M ENGR	
			MFG ENGR	
MATERIAL — // —	MODEL NO. 5536		TITLE WORK STATION W/TC	
FINISH — // —	SEE ENGRG SPECIFICATIONS No.			
	TOL. EX. AS NOTED .XX ± .XXX ± FRAC ± ANG ± FINISH ✓			
	SCALE — SHT 1 OF 2			
	WANG PART NUMBER	SIZE	DRAWING NUMBER	REV
	210-7541	D	7541	2

REVISION SEE SH.2 FOR REV.

"THIS DRAWING AND THE DATA SHOWN THEREON ARE THE CONFIDENTIAL PROPERTY OF, AND ARE PROPRIETARY TO, WANG LABORATORIES, INC. THIS DRAWING AND THE DATA SHOWN THEREON MAY NOT BE MADE PUBLIC WITHOUT THE WRITTEN CONSENT OF WANG LABORATORIES, INC. IF FOR ANY REASON THIS DRAWING IS PERMITTED BY WANG TO LEAVE THE PHYSICAL CUSTODY OF THE COMPANY, IT IS RETURNABLE UPON THE DEMAND OF WANG LABORATORIES, INC."

DO NOT SCALE

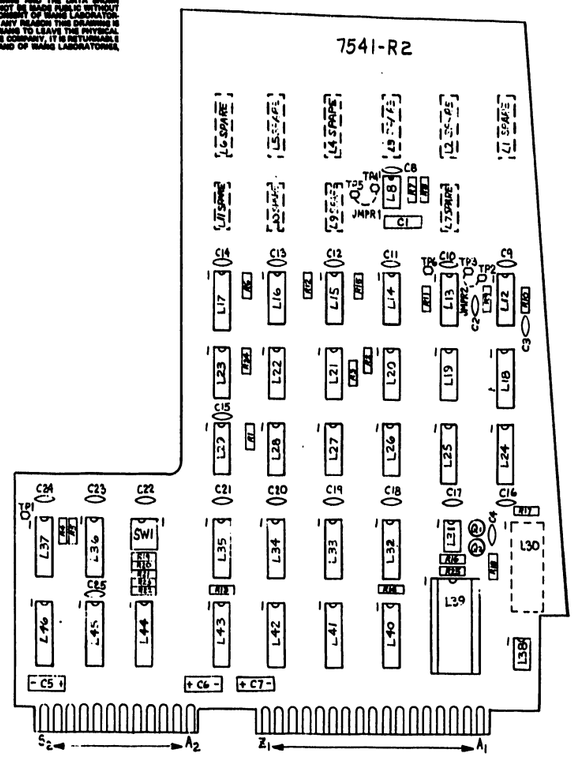

COMPONENT	W.L. PART NO.	TYPE
R1-6, 11-18, 23, 19-26	330-3022	2.2K ¼W 10%
R7	330-3016	1.5K ¼W 5%
R8	330-5034	330K ¼W 5%
R9, 10	330-2047	470Ω ¼W 10%
R16, 25	331-2012	120Ω ½W 10%
R18	330-1068	68Ω ⅛W 10%
C1	300-2147	.047μf 100V (M)
C2	300-1047	47 pf 500V
C3	300-1906	.001μf 500V
C4	300-1903	.01μf 25V
C5, 6, 7	300-4022	15μf 20V (T)
C8-25	300-1900	.05μf 12V
XTAL	321-0027	2.4576 MHz
Q1	375-1012	MPS6512
Q2	375-1014	MPS6518
L39	376-9015	28PIN SOCKET
SW1	325-1501	SPST 5 POS

LOCATION	W.L. PART NO.	TYPE
L1-7, 9-11		SPARE
L8	376-0126	555
L12, 21	376-0010	7404
L13	376-0005	7473
L14	376-0003	7410
L15, 23	376-0006	7474
L16, 19	376-0081	7408
L17	376-0097	74195
L18, 24	376-0077	75154
L20, 22, 28	376-0093	7432
L25	376-0082	74157
L26	376-0225	74LS11
L27	376-0016	7402
L29	376-0271	74S86
L30	-	NOT LOADED
L31, 38	376-0076	75150
L32, 33	376-0294	74LS139
L34, 35	376-0179	74368
L36, 37	376-0094	74161
L39	377-0352	8251A
L40, 42, 43	376-0297	74LS240
L41, 44	376-0288	74LS244
L45	376-0285	74LS245
L46	376-0286	74LS374

LOCATION	TYPE	SPARES
L12	7404	2
L16	7408	3
L20	7432	2
L29	74S86	3

MNEMONICS	COORDINATES
A_0-A_2	1G11
A_3	1G9
A_4	1G10
A_5	1G9
BA	1B1
BB	1G5
BD_0-BD_7	1A8
CA	1B1
CB, CC	1G4
CD	1B1
CF	1G4
(D_0)-(D_7)	1A5
DB	1G5
(DBIN)	1G9
DD	1G5
(INP)	1G10
INTIC	1F1
$\overline{IORQ}$	1G10
KP	1G5
$\overline{MI}$	1G9
$\overline{MR}$	1G6
(OUT)	1G10
(OUTS)	1G5
$\overline{RD}$	1G9
SCA	1B1
SCF	1G4
$\overline{WR}$	1G10
(WR)	1G10
IIBD	1G10

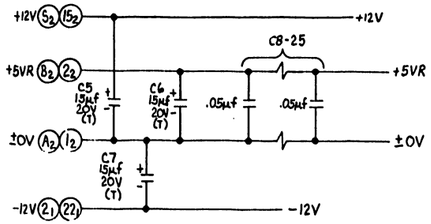

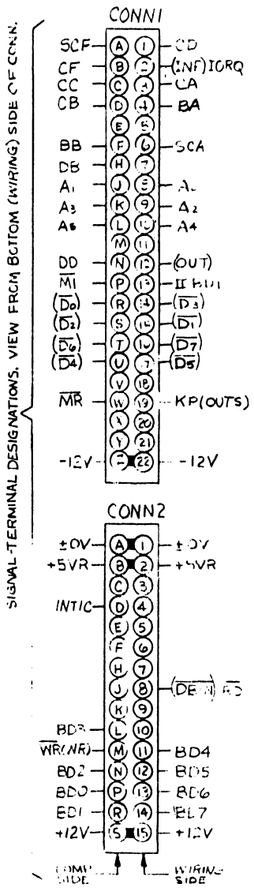

SIGNAL-TERMINAL DESIGNATIONS, VIEW FROM BOTTOM (WIRING) SIDE OF CONN.

E-REV
0

NO.	REVISION	BY	DATE
0	ORIGINATED PER DWG E717 AECO: U/C	K L	7/14/77
1/0	ECN 1951, W114 APPD: U/C	K L	7/28/77
2/0	REVISED PER ECO # 21572 APPD:	M S	5/16/83

WANG LABORATORIES, INC. LOWELL, MASS. U.S.A.

	BY	DATE	APPROVED BY	DATE
DWN	K L	7/14/77	E ENGR	
CHK			M ENGR	
			MFG ENGR	

MATERIAL —//—

MODEL NO. 5536

SEE ENGRG SPECIFICATIONS

No.

TITLE WORK STATION W/TC

FINISH —//—

TOL EX. AS NOTED
XX ± FRAC ±
XXX ± ANG. ± FINISH √

WANG PART NUMBER	SIZE	DRAWING NUMBER	REV.
210-7541	D	7541	2

SCALE — SHT 2 OF 2

D 7541

PRINTED IN U.S.A.

END