SERVICE BULLETIN NO. 82

EDITED BY CUSTOMER ENGINEERING DIVISION

December 15, 1977

MODEL 2270A IBM COMPATIBLE SHUGART DISK SYSTEM

This bulletin contains preliminary information describing the 2270A IBM compatible diskette system, which is usable on Wang 2200T, 2200VP, or 2200S with Option 24 as the primary storage device. More detailed information will be forthcoming in future publications.

NOTE:

In order to function properly, ribbon cable connectors must be at, or updated to, E-Rev 2:

210-6767.....ECN 6976
210-6766.....ECN 6977

The 7218 board be at E-REV 3 to avoid Phase Lock Loop sync problems (ECN 7821).

These ECN's are included in the appendix.

NOTICE:

This document is the property of Wang Laboratories, Inc. Information contained herein is considered company proprietary information and its use is restricted solely to the purpose of assisting you in servicing Wang products. Reproduction of all or any part of this document is prohibited without the consent of Wang Laboratories.

WANG LABORATORIES, INC.

1 INDUSTRIAL AVENUE, LOWELL, MASSACHUSETTS 01851, TEL (617) 851-4111, TWX 710 343-6769, TELEX 94-7421

Printed in U.S.A.
13-210A

TABLE OF CONTENTS

1. MODEL 2270A IBM-COMPATIBILE DISKETTE DRIVE.....5

1.1 OVERVIEW.....5
1.2 AUTOMATIC HARDWARE COMPATIBILITY.....5
1.3 2270A SOFTWARE.....6
1.4 DISKETTE CONVERSION.....8
1.5 IBM 3740 DATA ENTRY STATIONS.....9
1.6 PHYSICAL CHARACTERISTICS OF THE DISKETTES.....9

2. DESCRIPTION (HARDWARE).....17

2.1 GENERAL.....17
2.2 DESIGN FEATURES.....17

3. INSTALLATION.....19

4. OPERATION.....25

5. DIAGNOSTICS.....27

6. MAINTENANCE.....31

6.1 MICROPROCESSOR.....31
6.2 SA901 PREVENTIVE MAINTENANCE.....31
6.2.1 INTRODUCTION.....31
6.2.2 PREVENTIVE MAINTENANCE PROCEDURES.....32
6.2.3 CLEANLINESS.....32
6.3 TROUBLESHOOTING FLOW CHARTS.....32

7. REMOVAL AND INSTALLATION PROCEDURES.....41

7.1 DRIVE MOTOR.....41
7.2 CARTRIDGE GUIDE ACCESS.....41
7.3 LIGHT EMITTING DIODE ASSEMBLY.....42
7.4 WRITE PROTECT DETECTOR.....42
7.5 HEAD LOAD ACTUATOR.....42

7.6 TRACK 0 DETECTOR....43
7.7 INDEX/SECTOR PHOTOTRANSISTOR ASSEMBLY....44
7.8 CARTRIDGE GUIDE REMOVAL....44
7.9 SPINDLE ASSEMBLY....45
7.10 FRONT PLATE ASSEMBLY....45
7.11 STEPPER/CARRIAGE ASSEMBLY....45
7.12 READ/WRITE HEAD LOAD BUTTON....47
7.13 CARTRIDGE GUIDE ADJUSTMENT....47

8. PARTS DIAGRAMS....49

APPENDIX A SOFTWARE COMPATIBILITY....67

APPENDIX B RIBBON CABLE CONVERSION R1 to R2....78

APPENDIX C SHUGART LOGIC DIAGRAMS....81
50501-0 Logic Manual Index....82
50502-0 Functional Diagram....83
50503-0 Read/Write/Inop Ckts....84
50504-0 Stepper Control....85
50505-0 Detectors....86
50506-0 Motors/Soloniod/Switch....87
50507-0 Interface Inputs....88
50508-0 Interface Outputs....89
25000-1 Schematic Diagram, Diskette....90
6472-61 I/O CABLE ASSY....92
7218 IBM 3741 SHUGART BOARD....93

APPENDIX D 2270 TO 2270A CONVERSION....96

APPENDIX E ECN's 7218 BOARD....97

1. MODEL 2270A IBM-COMPATIBLE DISKETTE DRIVE

1.1 OVERVIEW

The Wang Model 2270A IBM-Compatible Diskette Drive is physically and functionally identical to the Wang Model 2270, except that the controller in each diskette drive has been modified to automatically handle both IBM 3740 Series diskettes and Wang diskettes. IBM 3740 diskettes, of course, must be previously formatted (initialized) by IBM prior to use on the 2270A. IBM timing mark conventions are followed by the modified controller, and allow supplied 2270A Software to access, modify and create 3740 Series diskette data files. Thus the user can read and process directly from 3740 diskettes. More important, however, are the supplied utility programs which allow all or selected files on an IBM 3740 diskette to be converted to Wang hard disks or diskettes as files in 2200 format, or vice versa. A Wang 2200T or 2200VP is required (or 2200S with Option 24).

Once converted to Wang diskettes, the files can be processed by Wang 2200 computers instead of the IBM computers which presently handle the preprocessing and processing tasks for the IBM 3740 family of Data Entry Stations.

The Wang 2270A is available in one, two, or three drive versions, namely, the 2270A-1, the 2270A-2 and the 2270A-3. One diskette drive must be reserved for 2270A software storage, unless a hard disk is available for the required on-line software storage. This IBM Compatibility feature is field-upgradable on existing 2270's.

1.2 AUTOMATIC HARDWARE COMPATIBILITY

Physically, IBM and Wang diskettes have different sector timing marks. To provide compatibility, Model 2270A Controller hardware analyzes the timing marks to sense whether an IBM 3740 diskette or a Wang 2200 diskette has been placed in the diskette drive. Once the

type of diskette is determined, hardware microcode reacts accordingly to provide automatic timing mark compatibility, as if the timing mark difference did not exist.

When a 3740 diskette must be converted or otherwise accessed, the diskette drive used automatically handles the 3740 diskette under the control of supplied 2270A software. In addition, 3740 files previouslv converted to a Wang diskette may be accessed and processed by simply loading other Wang 2200 software into memory. In this case, the diskette drives of the 2270A handle the Wang diskette as would any 2270, including formatting in the first (fixed) drive. Once the Wang processing operations have been completed, the processed files can be converted back to 3740 diskettes, if necessary, using supplied utility software. Automatic safeguards prevent a 3740 diskette operation from occurring on a Wang diskette, or a Wang operation on a 3740 diskette.

NOTE:

User-programming of the 2270A with 3740 diskettes, other than using supplied 3740 subroutines, is strictly not supported by Wang Laboratories, Inc. This restriction is necessary due to the complexity of handling microcode, the difficulties and dangers of handling the 3740 VTOC entries, and the recording differences in 3740 and 2200 diskettes.

1.3 2270A SOFTWARE

The 2270A software provided with each 2270A consists of a comprehensive set of utility programs and subroutines. Conversion functions include the ability to convert (copy) a selected file or all files on a 3740 diskette to a Wang disk or diskette in Wang 2200 format. Similarly, Wang disk or diskette files may also be converted to 3740 diskette files. In addition, subroutines allow the user to access, modify, and create 3740 diskette files.

Thus, the software package allows the user to process 3740 files directly from 3740 diskettes, or process converted 3740 files from Wang diskettes.

File Maintenance Group

File Maintenance DEFFN' Subroutines provide the means by which existing 3740 diskette data files may be accessed/maintained and also includes the capacity to create new data files in 3740 format. File Maintenance Group software consists of the following functions:

1. Read a sector
2. Write a sector
3. Backspace n sector(s)
4. Skip n sector(s)
5. Reread the last read/written sector
6. Write-end
7. Open (an existing new file)
8. Open new (create a new file)
9. Close a file

These functions are available to the user either directly through the console with operator prompts or indirectly via insertion of statements in the user's BASIC program.

Diskette Utilities Group

A comprehensive set of Diskette Utility Programs provide the means by which the user may directly (via console) invoke the following utility functions:

1. Convert the data file(s) on an IBM 3740 diskette to Wang 2200 format data files, or vice versa. All or selected files may be copied, and input and output disk addresses are also selected.

2. List the catalog (index) of a 3740 diskette.

3. Read and display on the CRT selected 3740 diskette sector(s).

4. Display on the CRT each sector of a specific 3740 data file which has been converted via the above utility function to a Wang diskette.

5. Copy 2270A Software, which is issued on a diskette, to a selectable hard disk.

Diskette Initialization Group

This software was developed for program testing purposes. It creates an image of an initialized 3740 diskette on a 2200 diskette, which mainly consists of the 3740 Volume Table of Contents (VTOC).

1.4 DISKETTE CONVERSION

IBM 3740 diskettes, like the Wang diskettes they resemble, are recorded on one side and require fixed length records within a file; however, that's where the similarities end. Differences in sector timing marks, as previously mentioned, are made compatible by hardware controller microcode. Software handles all file management functions including cataloging and sector allocation.

IBM 3740 diskettes can accommodate up to 19 files (IBM calls files "data sets"). Maximum 3740 diskette record length is 128 bytes, with one and only one record in each 128-byte sector. Each 3740 diskette contains 1,898 available sectors (73 tracks, 26 sectors per track).

When converting all files on a diskette, the Wang 2270A Conversion Utility Program adds converted files to the output disk or diskette until either all diskette files are converted or insufficient output diskette space exists to convert the next file. In the latter case, another output diskette is requested to contain the remaining files. In addition, selected files may be converted.

Within a file, the conversion process occurs as sector per sector copy. Wang records are equal in length to their 3740 diskette counterparts. As with 3740 diskettes, only one record resides in each sector. Character code translation between EBCDIC and ASCII is performed internally by the Conversion Utility Program.

1.5 THE IBM 3740 DATA ENTRY STATIONS

The IBM 3740 Series are low cost, key-to-diskette, source data entry devices. Over 50,000 have been installed, 95% of which are the non-programmable Data Stations used solely for data entry. The four 3741 Models vary in whether they (1) are programmable in a language called ACL, or (2) have communication capabilities. The table below summarizes the four 3741 models and the dual-operator 3742.

MODEL	PROGRAMMABLE	COMMUNICATION
3741, Model 1	No	No
3741, Model 2	No	Yes
3741, Model 3	Yes	No
3741, Model 4	Yes	Yes
3742 (Two Operators)	No	No

1.6 PHYSICAL CHARACTERISTICS OF THE DISKETTES

The magnetic recording surface is arranged in concentric circular recording tracks, with each track being further segmented into units called sectors. Each IBM 3740 diskette (WLI #177-0067) contains 77 tracks with 26 sectors per track, or 1,898 sectors per diskette. 3740 sector length is 128 bytes (characters), which is also the maximum record length for 3740 diskette files (referred to as "data sets" by IBM). The Wang diskette (2270A only) consists of 77 tracks with 16 sectors per track, or 1,231 sectors per diskette (minus at least two sectors for the Wang diskette index). Wang disk or diskette sector length is 256 bytes; however, maximum record length for Wang 2200 files that will be converted to 3740 diskettes

is 128 bytes. If Wang files need not be later converted to 3740 diskettes, record length restriction do not apply. With all disk or diskette storage devices, each sector is individually numbered and randomly accessible; thus access to records stored anywhere on the disk or diskette is fast and direct. Data is read or recorded (written) in one-sector blocks. As previously mentioned, the differences between Wang and 3740 diskettes are automatically handled by the hardware.

A conversion process is required to access an IBM diskette, and is performed as follows:

IBM address = Wang address + 16384

Sector Formatting

The left-most drive of the 2270A may be used to "format" a Wang diskette (not 3740 diskettes). Formatting is required before a Wang diskette can be used. Depression of the format button begins the formatting procedure, which defines each sector's control and user bytes. IBM 3740 diskettes are preformatted, or "initialized" before delivery by IBM.

Track Format (IBM)

Tracks may be formatted in numerous ways and is dependent on the using system. The SA900/901 use index and sector recording formats respectively.

Index Recording Format

In this Format, the using system may record one long record or several smaller records. Each track is started by a physical index pulse and then each record is preceded by a unique recorded identifier. This type of recording is called soft sectoring. Figure 1-1 shows a typical Index Recording Format.

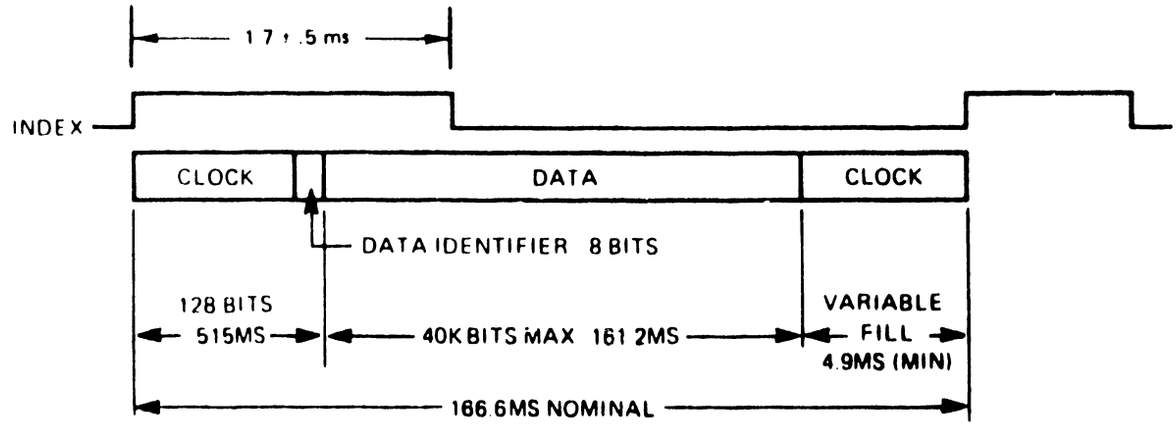

Figure 1-1 **Index Recording Format**

Typical Track Index Format

Figure 1-2 shows a track format, which is IBM compatible, using Index Recording Format with soft sectoring.

Gaps (Ref. Figure 1-2)

Each field on a track is separated from adjacent fields by a number of bytes containing no data bits. These areas are referred to as gaps and are provided to allow the updating of one field without affecting adjacent fields. As can be seen from Figure 1-2, there are four different types of gaps on each track.

Gap 1 Post-Index Gap

This gap is defined as the 32 bytes between Index Address Mark and the ID Address Mark for Sector one (excluding the address mark bytes). This gap is always 32 bytes in length and is not affected by any updating process.

Gap 2 ID Gap

The seventeen bytes between the ID Field and the Data Field is defined as Gap 2 (ID Gap). This gap may vary in size slightly after the Data Field has been updated.

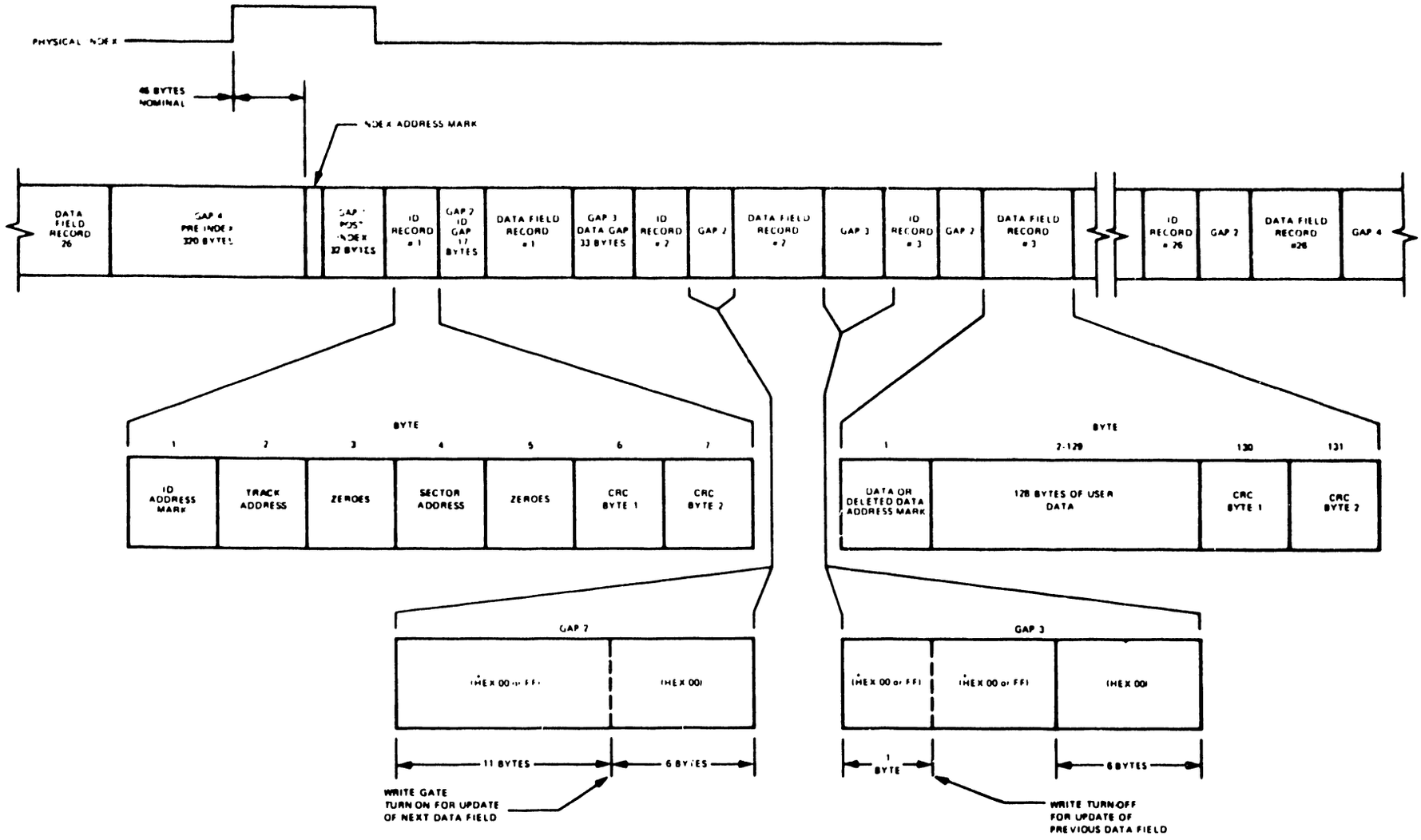

Figure 1-2 **Track Format**

Gap 3 Data Gap

The thirty-three bytes between the Data Field and the next ID Field is defined as Gap 3 (Data Gap). As with the ID Gap, the Data Gap may vary slightly in length after the adjacent Data Field has been updated.

Gap 4 Pre-Index Gap

The three hundred and twenty bytes between the last Data Field on a track and the Index Address Mark is defined as Gap 4 (Pre-Index Gap). Initially, this gap is nominally 320 bytes in length, however, due to write frequency tolerances and disc speed tolerances, this gap may vary slightly in length. Also, after the data field of record 26 has been updated, this gap may again change slightly in length.

Address Marks

Address Marks are unique bit patterns one byte in length which are used in this typical recording format to identify the beginning of ID and Data Fields and to synchronize the deserializing circuitry with the first byte of each field. Address Mark bytes are unique from all other data bytes in that certain bit cells do not contain a clock bit (all other data bytes have clock bits in every bit cell). There are four different types of Address Marks used. Each of these is used to identify different types of fields.

Index Address Mark

The Index Address Mark is loacted at the beginning of each track and is a fixed number of bytes in front of the first record. The bit configuration for the Index Address Mark is shown in Figure 1-3.

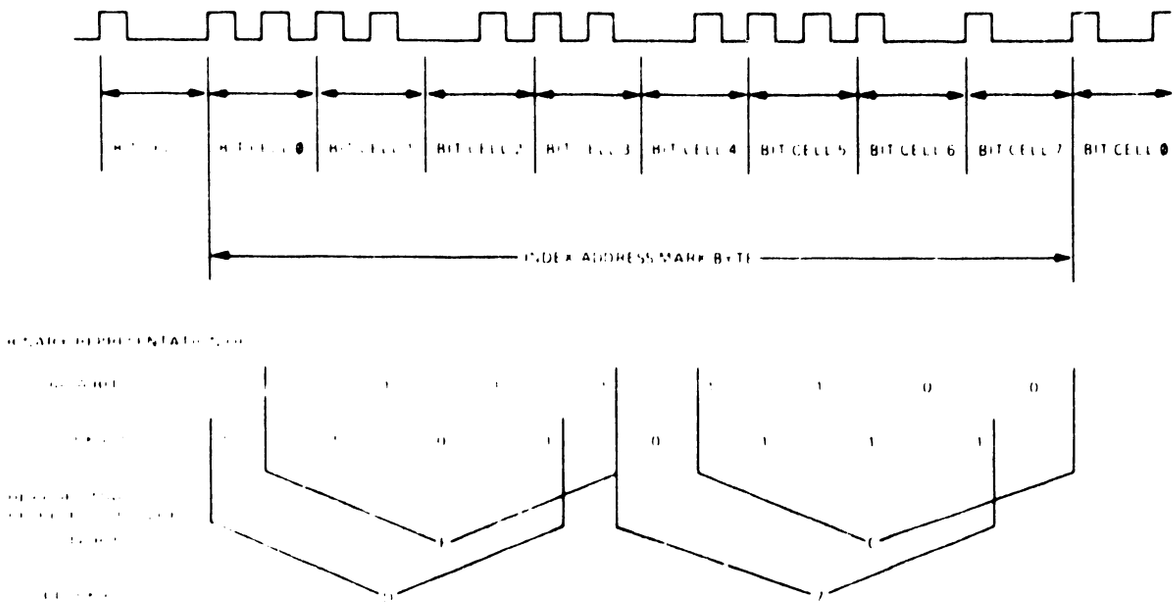

Figure 1-3 **Index Address Mark**

ID Address Mark

The ID Address Mark byte is located at the beginning of each ID Field on the diskette. The bit configuration for this Address Mark is shown in Figure 1-4.

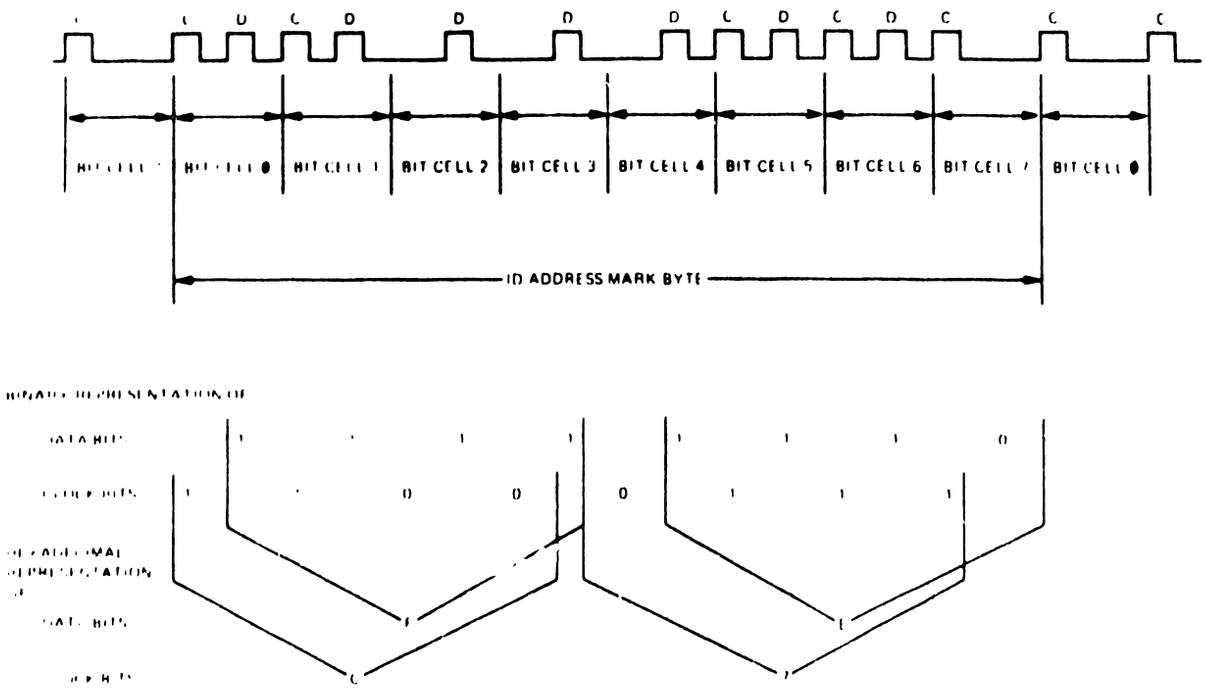

Figure 1-4 **ID Address Mark**

Data Address Mark

The Data Address Mark byte is located at the beginning of each nondeleted Data Field on the diskette. The bit configuration for this Address Mark is shown in Figure 1-5.

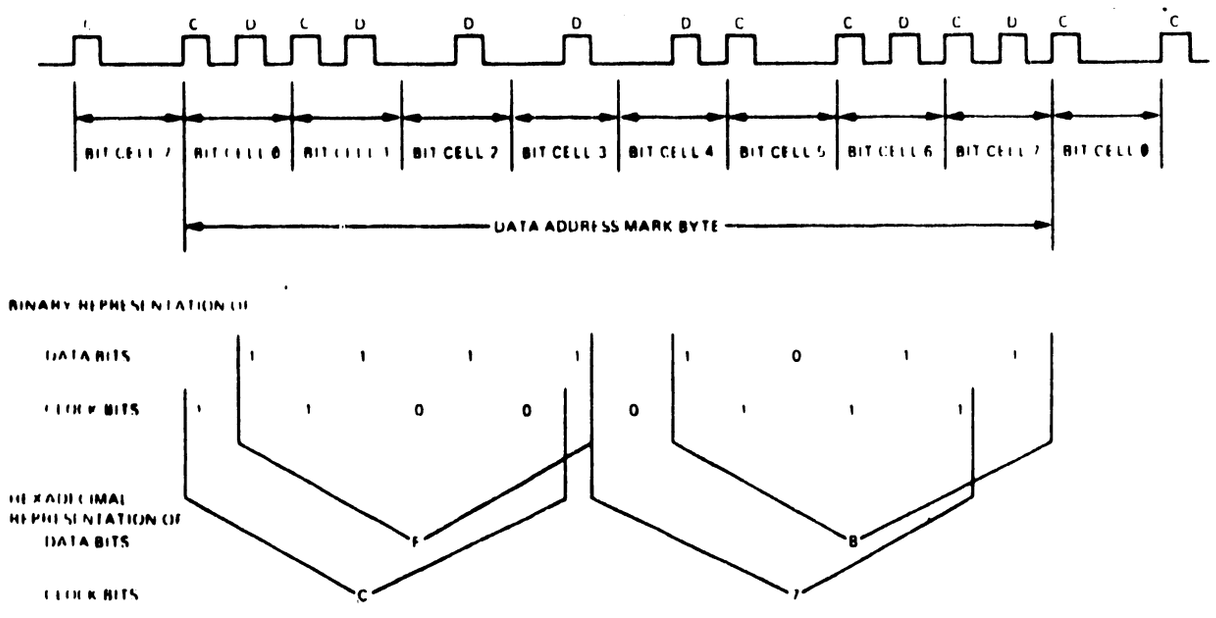

Figure 1-5 **Data Address Mark**

Deleted Data Address Mark

The Deleted Data Address Mark byte is located at the beginning of each deleted Data Field on the diskette. The bit configuration for this Address Mark is shown in Figure 1-6.

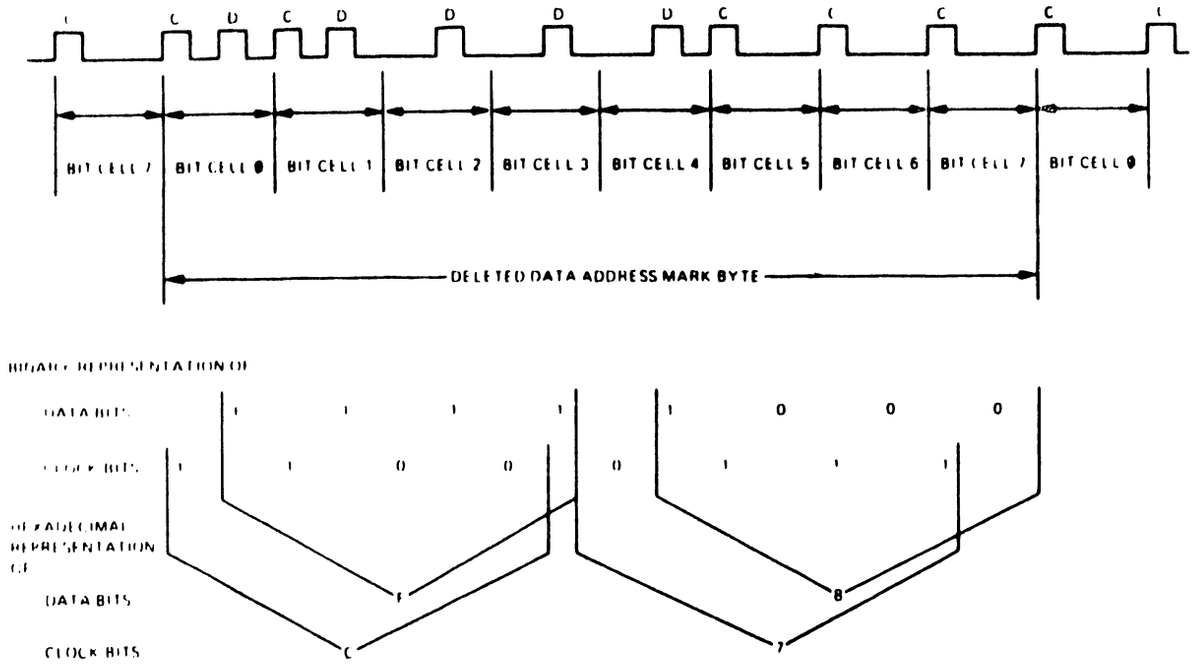

Figure 1-6 **Deleted Data Address Mark**

CRC

Each field written on the diskette is appended with two Cyclic Redundancy Check (CRC) bytes. These two CRC bytes are generated from a cyclic permutation of the data bits starting with bit zero of the address mark and ending with bit seven of the last byte within a field (excluding the CRC bytes). When a field is read back from a diskette, the data bits (from bit zero of the address mark to bit seven of the second CRC byte) are divided by the same generator polynomial. A non-zero remainder indicates an error within the data read back from the drive while a remainder of zero indicates the data has been read back correctly from the disk.

2.1 GENERAL

The Shugart Disk System used in the WCS follows the same basic design as our previous disk systems with many improvements to make this system more reliable and easier to service.

The Shugart Disk System consists of a Wang microprocessor controller and power supply, mounted on one printed circuit board, with up to three Shugart disk drives contained in the unit.

2.2 DESIGN FEATURES

The processor and regulator are comined on one PC (7218) which mounts to the chassis, component side down. The power supply, which includes the transformer filter capacitors and heat sink, is mounted on a removable brace between the microprocessor and the disk drives.

The microprocessor is a condensed version of the same microprocessor used in our other disk systems and the 9 track tape drive (2209). Refer to the Microprocessor Manual for the microprocessor description and operation.

2.3 MECHANICAL AND ELECTRONIC DIFFERENCES BETWEEN WCS AND SERIES 40 DISK SYSTEMS

The only shipping clamp on the WCS disk system is a piece of foam taped in the door opening to keep the door open protecting cartridge guide adjustment.

The WCS incorporates one to three Shugart Model 901 disk drives which use an IBM compatible disk cartridge.

The Shugart Model 901 disk drives use a multiplex option which allows all input and output lines to be parallel. The disk select lines DK1, DK2, and DK3 determine which drive is using these lines.

The stepper motors in the Shugart drive are turned off when the head is unloaded from the disk. This allows the drives to operate much cooler than the Memorex drives. In order to load the head in the Shugart drive, both the drive select and the head load lines must be low or true. The head load line fires a one shot which keeps the head loaded for a time after the drive select line goes high. This allows the unit to be reselected without waiting for the head to settle to read or write.

Sector and index marks from each drive are monitored individually because they are present at the output of each drive as long as there is a disk cartridge in the drive; these signals are independent of the drive select lines.

The RAM is 512 x 8 rather than 1024 x 8; this is accomplished by using 2102-2 RAM ICs which are 256 x 4 having 4 bit parallel input/output as opposed to the 1024 x 1 serial input/output.

The only input path to memory in this processor is the C Bus. Data from the disk is sent through the ALU via this bus using an A to M, PC=1 instruction from the ROM.

St0 and St1 are strictly inputs on the WCS floppy except for one bit, the carry bit which is input and output but cannot be used by the ALU as a bit included in the next result. The carry bit can only be sampled by the ALU to check its state.

The microprogram in the WCS floppy is contained in two (2) 2708 PROM chips and does not require changing if a disk drive is added to the customer's WCS. The PROM numbers and locations are listed below.

378-2058 378-2059

Two 2200 error codes have other possible meanings in the WCS: Error 64 is "sector not on disk" but can also mean "no cartridge in the drive, the drive door is open or that the drive is not ready." Error 71 is "cannot find sector" but can also mean "disk is write protected."

3. INSTALLATION

The 2270A Shugart disk system is shipped completely assembled inside as a stand-alone 2270A. The only shipping clamp is a piece of foam in the door of each drive and a piece of masking tape to hold the foam in place.

The disk system should be disassembled before the unit is powered on to check that the plug-in connectors and components have not been loosened during shipment. The voltages should also be checked while the system is removed from the cabinet.

1. Remove the unit cover.

2. To remove the processor PC board, and the 6 Phillips head mounting screws on the perimenter of the PC board.

   CAUTION:

   Reinstall the nylon washers on each screw. They protect the screws from shorting the PCB art work.

   At this time the PC board should be turned 180 toward the front of the cabinet, and set down on the rubber grommets, with a piece of foam between the PC board and the chassis. The cable strain will keep the PC board from falling forward (test postition).

   The PC board can be removed by turning it 90 toward the front and removing all the connectors.

3. The voltages can be checked from the wire side of the board by following the diagram below and with the I/O and power cable plugged in and the power switch ON. (See Figure 3-1).

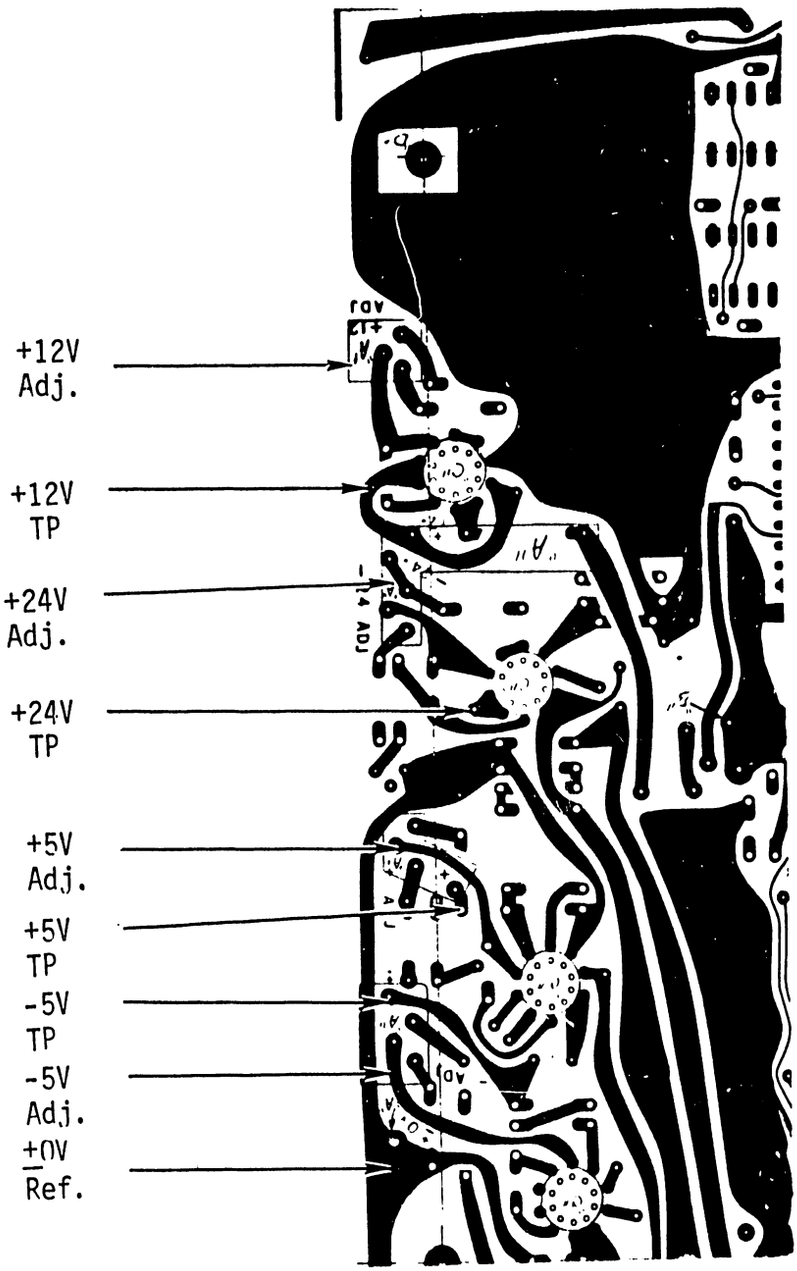

Figure 3-1 Regulated Voltages

Insure that the I/O cable (WLI #220-0066-4) has pin 11 open. This is necessary for proper system operation. The 7218 PCB has +5V connected to pin 11 of the I/O cable connector J1. This was done to allow the 2270A to be used in conjunction with a 7169 pcb in WCS-15 applications.

5. Voltage Controlled Oscillator (VCO) Adjustment

NOTE:

+5V must be adjusted prior to performing this adjustment.

A. Attach the channel 1 (oscilloscope) probe to L110 pin 3. Vertical deflection 2v/cm, Sweep rate .5us/div, Trigger internal positive slope on channel 1, Display channel 1 only. With the system reading sector 17385*, adjust R86 until a period of 2us is acquired (See figure 3-2).

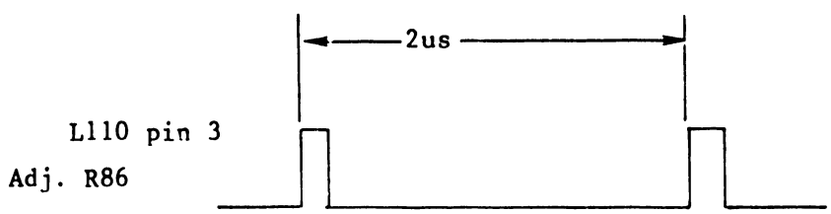

Figure 3-2

*This can be accomplished by this short program: 10 Verify F (17385, 17385): GOTO 10.

B. Attach the channel 2 oscilloscope probe to L110 pin 1. Vertical defection 2v/cm, Sweep rate, .5us/div. Trigger internal positive on channel 1, add mode. Adjust R86 until the channel 1, channel 2 signals are coincident (See Figure 3-3).

NOTE:

THIS IS A TEMPERATURE SENSITIVE CIRCUIT AND MAY GO OUT OF SYNC. IF THE SYNC IS LOST, THEN ECN 7821 MUST BE INSTALLED AND THE ADJUSTMENT PERFORMED AGAIN.

Display prior to adjusting R86

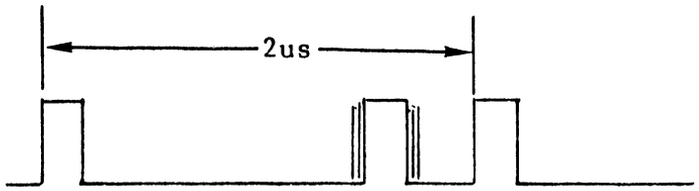

Display after adjusting R86*

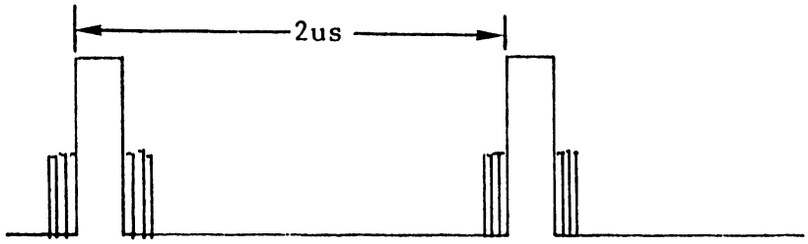

Figure 3-3

*NOTE:

When the channel 1, channel 2 signals are coincident, the display amplitude will double. The pulse jitter seen in the photographs is due to the continuous compensation that takes place as the Phase Locked Loop (PLL) locks onto the incoming data. (See Figure 3-4)

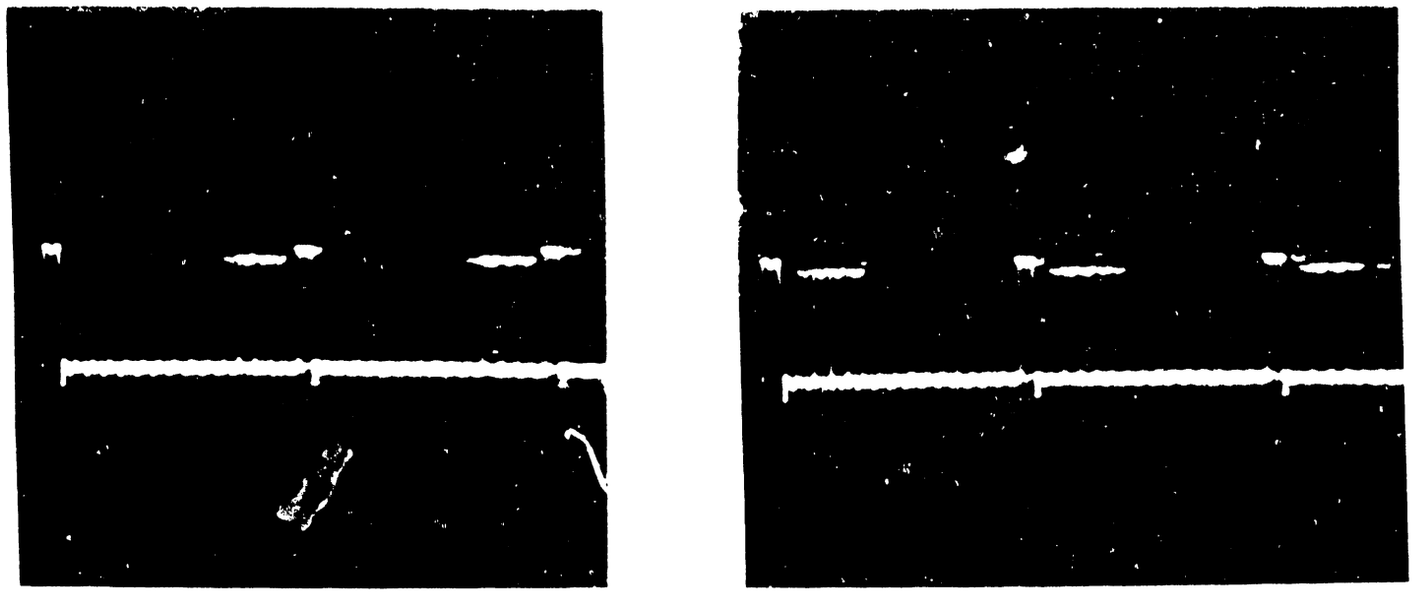

Possible Displays if the PLL Requires Adjustment

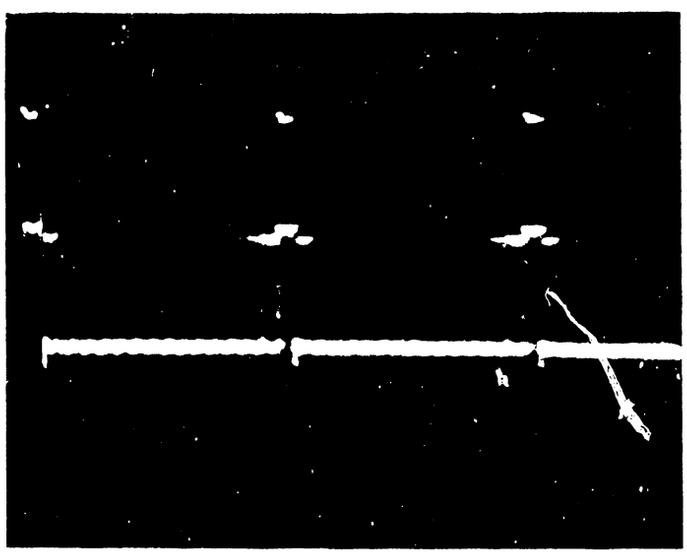

Display with the PLL Properly Adjusted

Figure 3-4

NOTES

4. OPERATION

The front panel of the 2270A floppy disk system has three disk select lights, and a format pushbutton with a shroud to protect it from accidental formatting and a power light.

There is no format switch to protect static electricity from formatting the disk, but rather an electronic format project which rejects any attempt to format the disk which does not last for at least 100 ms.

Formatting on the disk system is done on Disk #1 only. This is a hard wired function of Disk #1 and can be initiated by installing a Model 901 diskette in Drive #1 and pushing the format pushbutton. If the diskette or disk drive is faulty and it does not complete the format operation within four attempts the Drive Select Light #1 will flash indicating an error during format.

This writes Wang format on the Diskette. This will NOT format an IBM diskette--they are preformatted.

NOTES

5. DIAGNOSTICS

The following is a step by step description, concerning operating the program for "2270A Production Test," and the CRT display.

Step 1. Rewind cassette (if needed) and press:

Step 2. : LOAD "START" (EXEC)
after the "START" program has been loaded, press:

Step 3. : RUN (EXEC)
Two lines should be displayed, of which the second line will be:

Step 4. "ENTER 1 FOR WANG PLATTER, 2 FOR IBM PLATTER?"
Enter 1 or 2 and Press (EXEC), depending on kind of platter to be used.

NOTE: An IBM platter can be used only on 2270A diskette drive.

Now "WANG DISK" or "IBM DISK" will be displayed in the top line, and the second line will be replaced by:

Step 5. "ENTER TEST #: 1. MICROCODE 2. MICROCODE-HARDWARE
3. HARDWARE ?"
Enter 1 for Disk Microcode test, 2 for Disk Microcode and Hardware test or 3 for Disk Hardware test. After pressing (EXEC), the selected test name will be displayed in the top line, and the second line will be replaced by:

Step 6. "ENTER DRIVE(S) ADDRESS(S), 0 TO STOP: 1. 310 2. B10 3. 350"?
The number by the Disk drive addresses on which the test will operate should be entered here. Any combination of Disk drives is allowed. Upon selecting a disk address, an asterisk will be displayed by the selected address. Selecting all three drives or selecting 0, will cause line to be erased, and the selected disk-drives to be displayed on the right hand side of second line. If Hardware test was selected in Step 5, proceed to Step 8.

Step 7. The following lines will be displayed if 1 or 2 were entered in Step 5.
"ENTER INSTRUCTION NUMBER TO BE TESTED, 0 TO STOP?" This line will be followed by a list of all the instructions available for testing, depending on the selected disk-drives, and the type of platter. You may select 1, if you wish to test all the instructions. Or, enter any combination of instructions (an asterisk will be displayed by the selected instruction). Selecting 1 or 0 causes to stop the instructions selection and "ALL MICROCODE", or "PART MICROCODE" to be displayed in the left hand side of line 2, the third line will be replaced by: "THE SELECTED INSTRUCTIONS": and the bottom line will be:

Step 8. "ENTER 1 TO RESELECT, 0 TO CONTINUE?"
The screen now displays all of the information as you have selected it. If you wish to change any detail, press 1, and entering information will start again, (back to Step 4), otherwise, enter 0 and the screen will be erased except the top two lines, and the third line will be displayed as:

Step 9. "MOUNT SCRATCH PLATTERS IN ALL TEST DRIVES AND KEY (EXEC)"

NOTE:

Be sure to mount the correct scratch platters in all of the test drives (as indicated by the top two lines).

After mounting platter(s), and (EXEC) the proper testing program will be loaded from the cassette, and the actual testing starts. While the test is progressing, information concerning the current status of the test is being displayed on the screen.

Step 10. Each test will be repeated over and over until one of the following actions is taken:

10.1 Presssing SF'15 (special function 15). That will cause the test status report to be displayed (proceed to Step 11).

10.2 Pressing "HALT/STEP", Once the ":" is displayed pressing SF'15 will display the test status report. (Step 11)

10.3 Pressing "RESET", That will cause the screen to be erased. Pressing SF'15 is possible.

Step 11. After pressing SF'15, the test status report will be displayed; information, such as number of runs of each test, test "RUN" or "NOT RUN", "COMPLETED" or "NOT COMPLETED", "ERRORS FOUND" in Microcode, or Hardware tests. "OK" or "NG" or, "NOT TESTED" will be displayed next to the instruction, with the exception of "VERIFY" which will have "TESTED" in its field (whether errors were found or not). At the bottom of the screen, the following line will be displayed:

Step 12. "ENTER 0 TO RUN AGAIN, 1 TO STOP"
0 will start the whole process from the beginning (Step 4). 1 will stop the program, however, since "START" is still stored in memory; pressing "RUN" will start the program execution again (Step 4).

NOTES

6. MAINTENANCE

6.1 MICROPROCESSOR

The voltage adjustments covered in Section 3 and the VCO adjustment should be the only maintenance requirements required in the microprocessor section of the Shugart disk system. The microprocessor PC board at present should be fixed at an area level office.

The Wang power supply is a modular type which is mounted to a removable support bracket and can be replaced in this manner if necessary. The heat sink assembly can also be removed from the support bracket so that component replacement on the heat sink can be made in the customer's office.

6.2 SA901 PREVENTIVE MAINTENANCE

6.2.1 INTRODUCTION

The prime objective of any preventive maintenance activity is to provide maximum machine availability to the user. Every preventive maintenance operation should support this objective. Unless a preventive maintenance operation reduces machine downtime, it is unnecessary.

Visual inspection is the first step in every scheduled maintenance operation. Always look for corrosion, dirt, wear, binds, and loose connections. Noticing these items during PM may prevent downtime later.

Remember, do not do more than recommended preventive maintenance on equipment that is operating satisfactorily.

6.2.2 PREVENTIVE MAINTENANCE PROCEDURES

Details of preventive maintenance operations are listed in Table 6-1. During normal preventive maintenance, perform only those operations listed on the chart for that preventive maintenance period. Details on adjustments and service checks are found listed in the chart. Observe all safety procedures.

UNIT	FREQ MONTHS	CLEAN	OBSERVE
Read/Write Head	12	Clean Read/Write Head ONLY IF NECESSARY	Oxide build-up and scratches
R/W Head Load Button		Replace	
Stepper Motor and Lead Screw		Clean off all oil, dust and dirt	Inspect for nicks and burrs
Base		Clean base	Inspect for loose screws, connectors, and switches
Belt			Inspect for worn, weakened or frayed areas
Read/Write Head	Initially 3 Thereafter 12		Check for proper alignment

Table 6-1 PM Procedures

6.2.3 CLEANLINESS

Cleanliness cannot be overemphasized in maintaining the SA900/901. Do no lubricate the SA900/901; oil will allow dust and dirt to accumulate. The read/write head should be cleaned, but only when signs of oxide build-up are present.

6.3 TROUBLESHOOTING FLOW CHARTS

See Figure 6-2(A thru D)

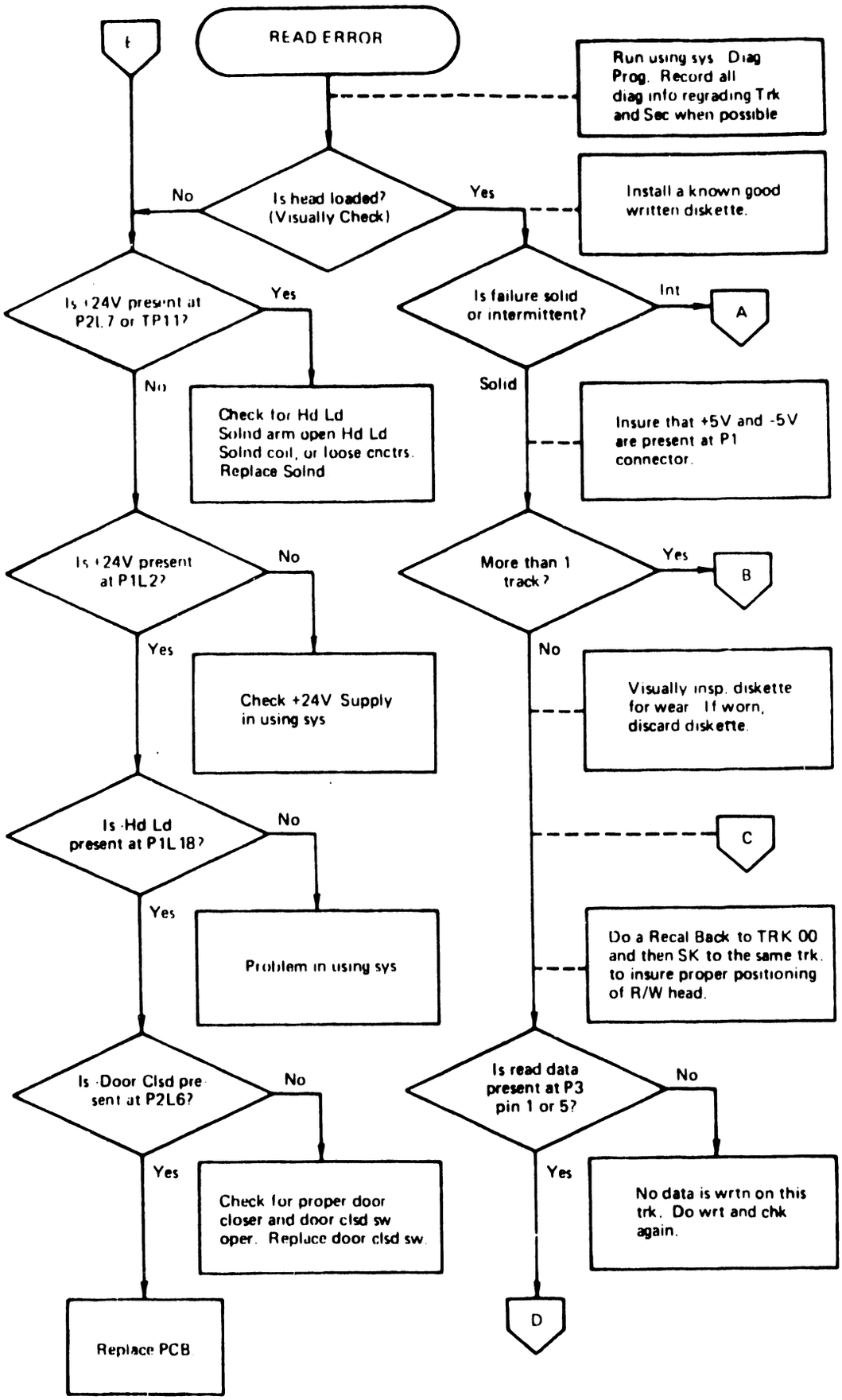
t
READ ERROR
Run using sys Diag Prog. Record all diag info regrading Trk and Sec when possible
No
Is head loaded? (Visually Check)
Yes
Install a known good written diskette.
Is +24V present at P2L7 or TP11?
Yes
No
Check for Hd Ld Solnd arm open Hd Ld Solnd coil, or loose cnctrs. Replace Solnd
Is failure solid or intermittent?
Int
A
Solid
Insure that +5V and -5V are present at P1 connector.
Is +24V present at P1L2?
No
Yes
Check +24V Supply in using sys
More than 1 track?
Yes
B
No
Visually insp. diskette for wear If worn, discard diskette.
Is -Hd Ld present at P1L18?
No
Yes
Problem in using sys
C
Do a Recal Back to TRK 00 and then SK to the same trk. to insure proper positioning of R/W head.
Is -Door Clsd present at P2L6?
No
Yes
Check for proper door closer and door clsd sw oper. Replace door clsd sw.
Is read data present at P3 pin 1 or 5?
No
Yes
No data is wrtn on this trk. Do wrt and chk again.
Replace PCB
D

Figure 6-2A

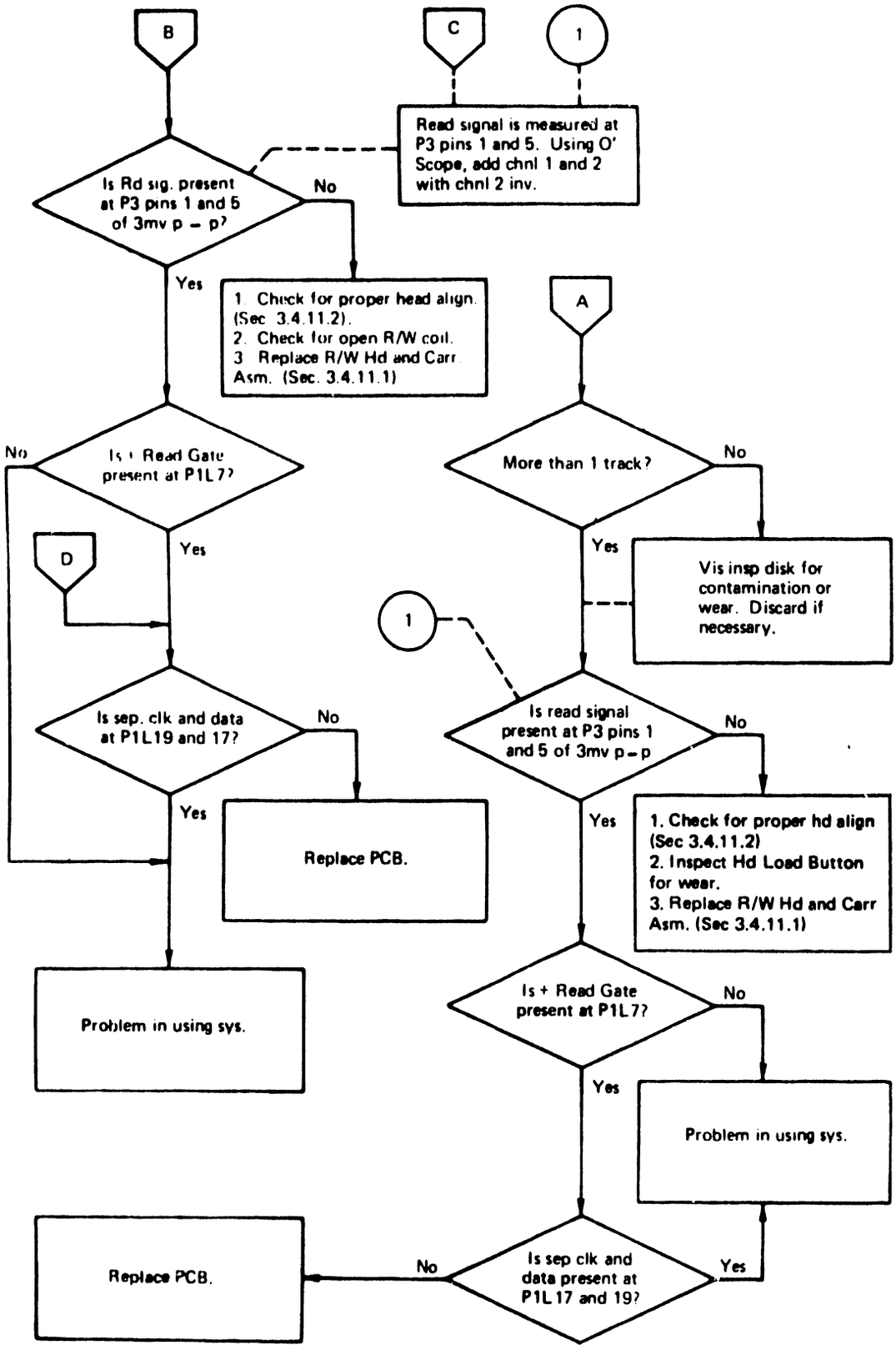

Figure 6-2A(Continued)

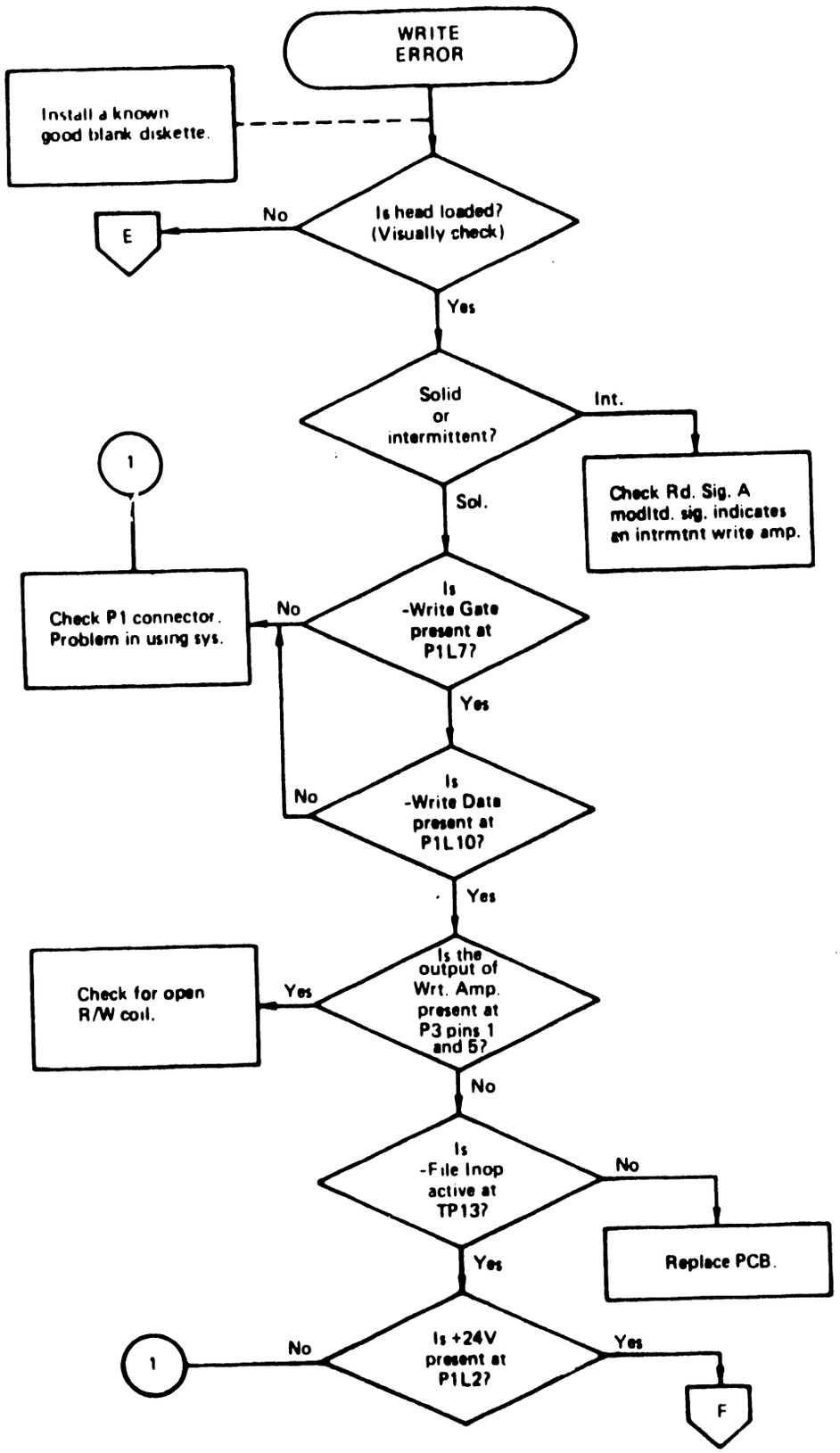
WRITE ERROR
Install a known good blank diskette.
Is head loaded? (Visually check)
No
E
Yes
Solid or intermittent?
Int.
Check Rd. Sig. A modltd. sig. indicates an intrmtnt write amp.
Sol.
1
Check P1 connector. Problem in using sys.
No
Is -Write Gate present at P1L7?
Yes
No
Is -Write Data present at P1L10?
Yes
Check for open R/W coil.
Yes
Is the output of Wrt. Amp. present at P3 pins 1 and 5?
No
Is -File Inop active at TP13?
No
Replace PCB.
Yes
1
No
Is +24V present at P1L2?
Yes
F

Figure 6-2B

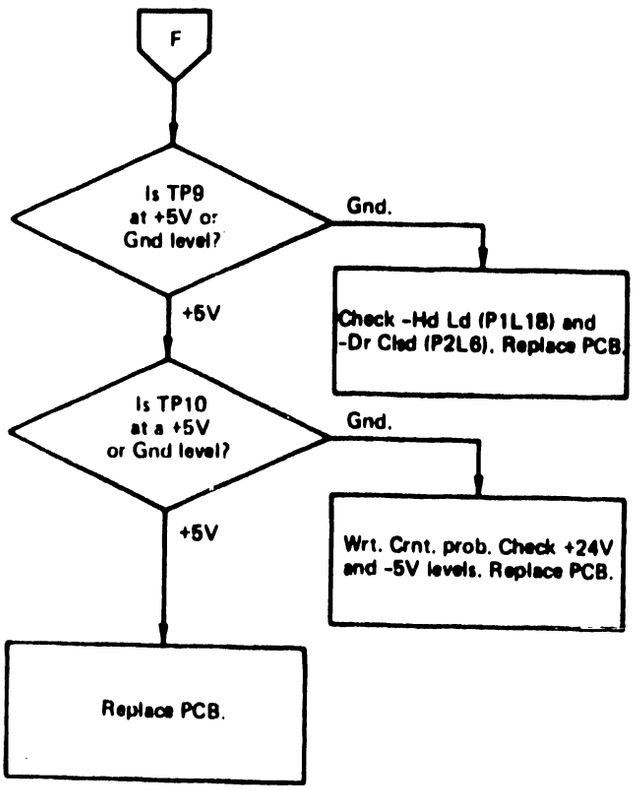

Figure 6-2B (Continued)

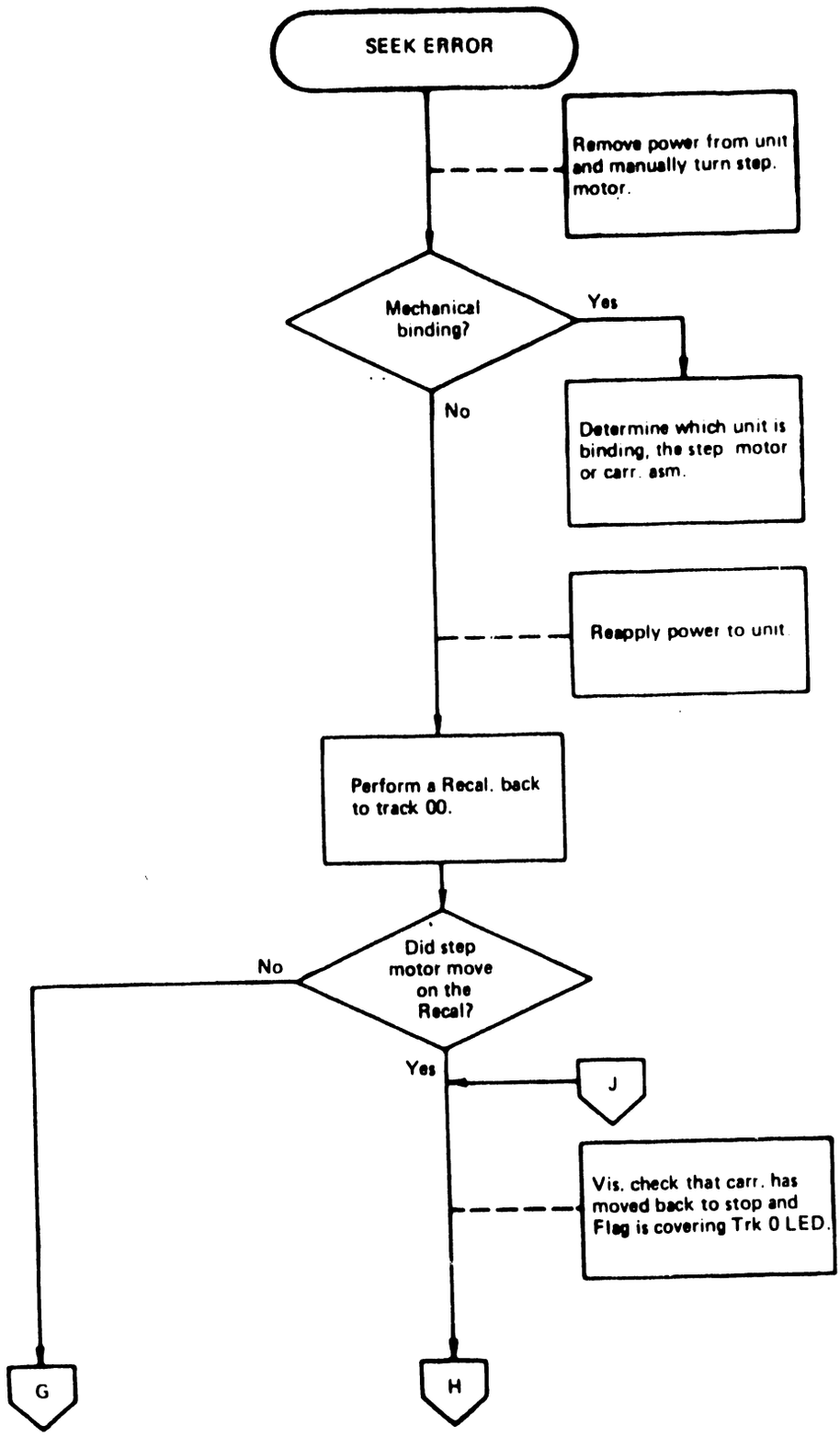
SEEK ERROR
Remove power from unit and manually turn step. motor.
Mechanical binding?
Yes
No
Determine which unit is binding, the step motor or carr. asm.
Reapply power to unit.
Perform a Recal. back to track 00.
Did step motor move on the Recal?
No
Yes
J
Vis. check that carr. has moved back to stop and Flag is covering Trk 0 LED.
G
H

Figure 6-2C

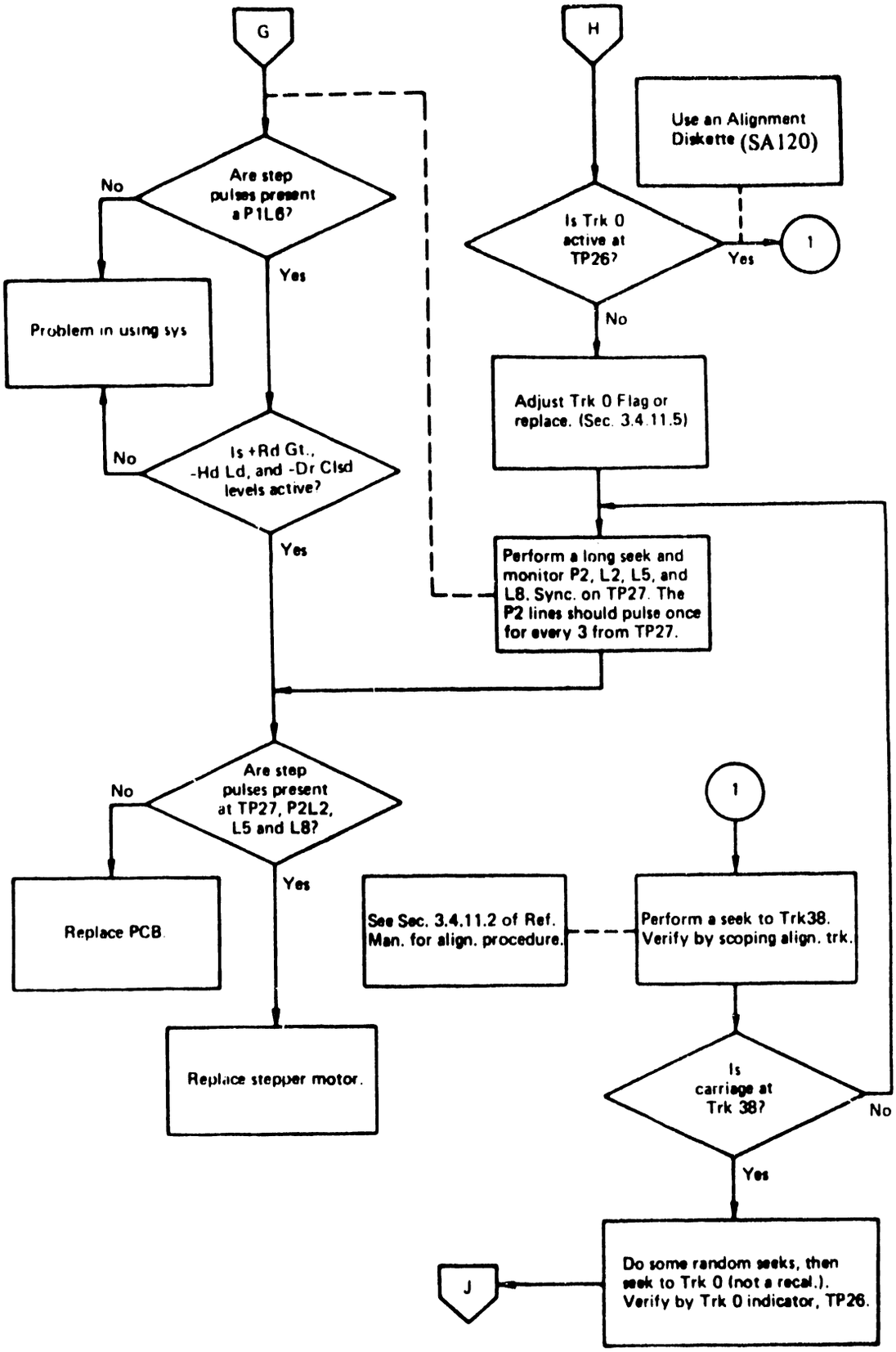

Figure 6-2C (Continued)

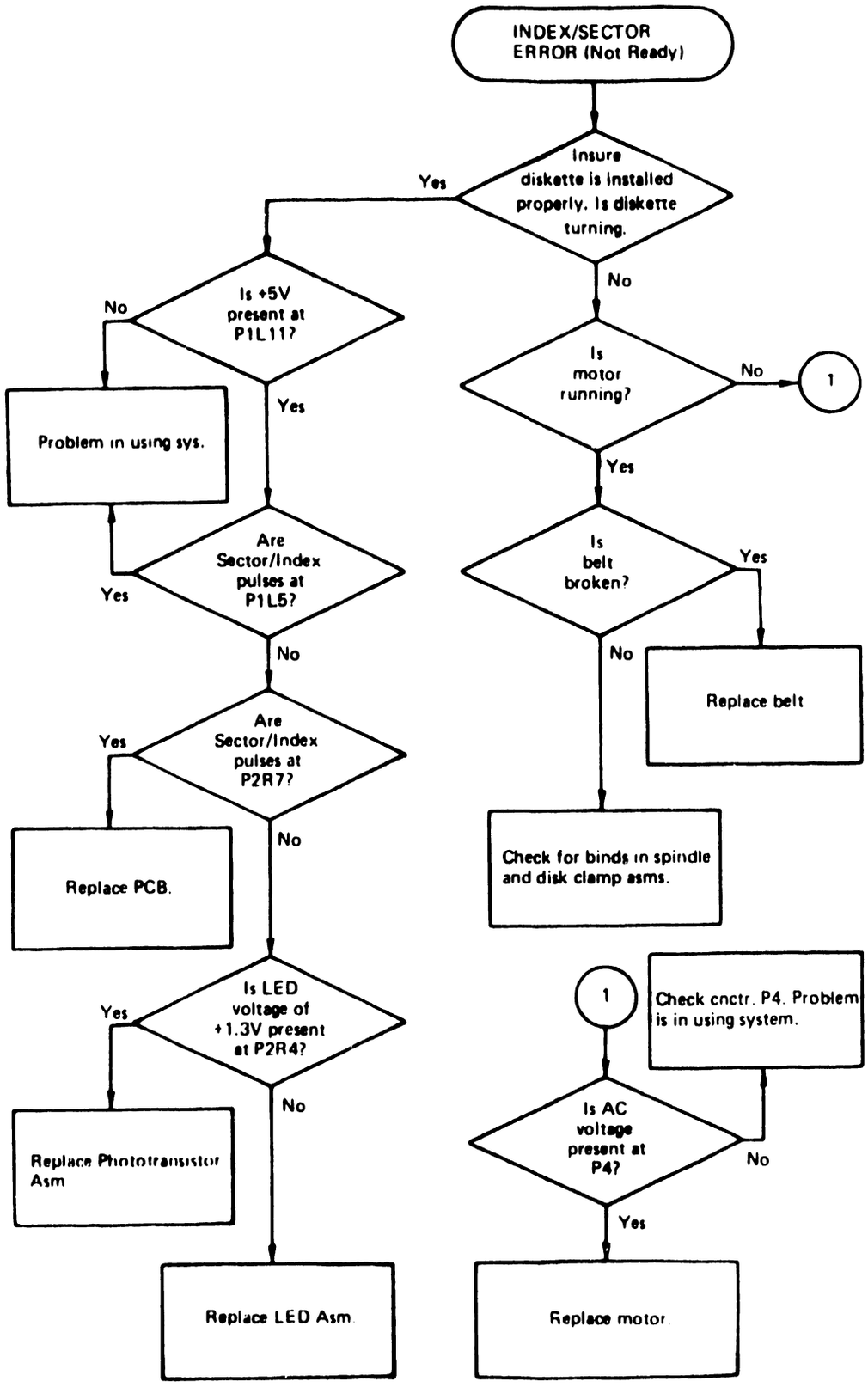
INDEX/SECTOR ERROR (Not Ready)
Insure diskette is installed properly. Is diskette turning.
Yes
No
Is +5V present at P1L11?
No
Yes
Problem in using sys.
Are Sector/Index pulses at P1L5?
Yes
No
Are Sector/Index pulses at P2R7?
Yes
No
Replace PCB.
Is LED voltage of +1.3V present at P2R4?
Yes
No
Replace Phototransistor Asm
Replace LED Asm
Is motor running?
No
1
Yes
Is belt broken?
Yes
No
Replace belt
Check for binds in spindle and disk clamp asms.
1
Check cnctr. P4. Problem is in using system.
Is AC voltage present at P4?
No
Yes
Replace motor

Figure 6-2D

NOTES

7. REMOVAL AND INSTALLATION PROCEDURES

7.1 DRIVE MOTOR

a. Extract 3 contacts to disconnect motor from AC connector.

b. Loosen 2 screws holding capacitor clamp to the base. Remove rubber boot and disconnect motor leads from capacitor.

c. Remove 4 screws holding PCB to base and swing PCB out.

d. Remove belt from drive pulley.

e. Remove 4 screws holding the motor to the base casting and remove motor.

f. Reverse the procedure for installation.

NOTE:

Insure ground lead is installed between capacitor for clamp and base.

7.2 CARTRIDGE GUIDE ACCESS

a. Position head to approximate center of head load bail (to prevent load arm tab from slipping off end of bail).

b. Loosen 2 screws holding cartridge guide to door latch plate.

c. Swing cartridge guide out.

d. When guide is swung in, it must be adjusted as per section 7.13.

7.3 LIGHT EMITTING DIODE ASSEMBLY

a. Disconnect the wires to the LED terminals (solder joints).

b. Swing out the cartridge guide assembly (Ref. Section 7.2).

NOTE:

This step is not necessary if the drive has a new style (cast) cartridge guide.

c. Remove the screw, nut, and washer holding the LED assembly to the cartridge guide.

d. Reverse the procedure for installation.

7.4 WRITE PROTECT DETECTOR

a. Remove connectors from PCB and remove PCB.

b. Extract wires from P2 connector, pins 3 (Red), 4 (Gray), E (Black), and J (White).

c. Remove cable clamp.

d. Swing out cartridge guide assembly (Ref. section 7.2).

e. Remove screw holding the detector bracket and remove assembly.

f. Reverse the procedure for installation.

7.5 HEAD LOAD ACTUATOR

a. Disconnect the wires to the actuator terminals (solder joints).

b. Swing out the cartridge guide assembly (Ref. section 7.2).

c. Remove screw holding the actuator to the cartridge guide.

CAUTION:

Restrain the head load arm to prevent its impact with the head.

d. Reverse the procedure for installation.

7.6 TRACK 0 DETECTOR

a. Remove connectors from PCB and remove PCB.

b. Extract wires from P2 connectors, pins A (Brown), C (Black), F (Red), and K (Orange).

c. Remove cable clamp.

d. Swing out the cartridge guide assembly (Ref. section 7.2).

NOTE:

This step may not be useful if the drive has an old style (black) cartridge guide.

e. Manually rotate stepper shaft and move carriage away from the detector assembly.

f. Remove cable clamp, and R/W head cable from bracket.

g. Remove 2 screws holding detector assembly bracket to base casting and remove assembly.

h. Reverse procedure for installation.

7.7 INDEX/SECTOR PHOTOTRANSISTOR ASSEMBLY

a. Disconnect the wires to the terminals (solder joints).

NOTE:

The spindle pulley may be removed for easier access.

b. Remove screw holding transistor assembly to base.

c. Reverse the procedure for installation.

7.8 CARTRIDGE GUIDE REMOVAL

a. Swing out the cartridge guide assembly (Ref. section 7.2).

b. Remove the LED assembly, write protect detector assembly and the head load actuator (Ref. sections 7.3, 7.4 and 7.5).

c. Pull up on the upper pivot cap screw until the shoulder contacts the base casting (Ref. Figure 7-1). Push up on the cartridge guide until the lower pivot clears the casting.

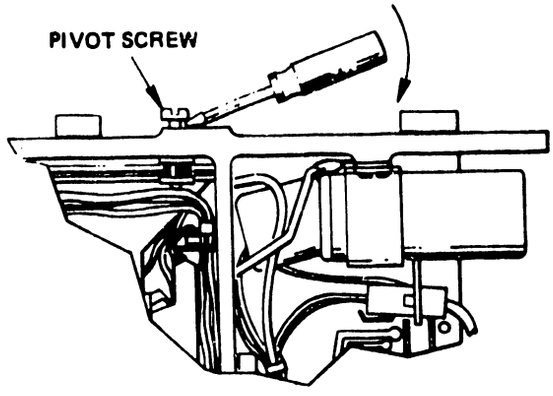

Figure 7-1 Cartridge Guide Removal

NOTE:

For new style cartridge guide, remove C-clamp on upper pivot post and push up on cartridge guide.

d. Tilt the cartridge guide slightly, and remove it from the upper pivot.

e. Reverse the procedure for installation.

a. Swing out the cartridge guide (Ref. section 7.2).

b. Remove the nut and washers holding the spindle pulley.

CAUTION:

The pre-loaded rear bearing and spacer may fly out when spindle pulley is removed.

c. Withdraw spindle hub from opposite side of base casting.

d. Reverse the procedure for installation.

7.10 FRONT PLATE ASSEMBLY

a. Swing out the cartridge guide assembly (Ref. section 7.2).

b. Remove 4 screws holding the front plate assembly to the casting.

c. Reverse the procedure for installation.

7.11 STEPPER/CARRIAGE ASSEMBLY

a. Remove the connectors from the PCB and remove the PCB.

b. Remove cable clamp holding R/W head cable.

c. Extract wires from P2 connector, pins 2 (Red), 5 (Brown), 8 (Orange), and 10 (Black).

NOTE:

This step is only necessary if the stepper motor is to be replaced.

d. Loosen 3 motor clamp screws and rotate clamps to allow withdrawal of motor. One new units with redesigned stepper mounting clamp, loosen 2 screws and swing clamp down to allow withdrawal of motor.

CAUTION:

Do not loosen 3 screws coated with Glyptol.

e. Swing out the cartridge guide assembly (Ref. section 7.2).

f. Remove cable clamp and spacer holding R/W head cable to track 0 detector bracket. On new units, a grommet on the cable is inserted into a slot on the bracket.

g. Manually rotate the lead screw to run the carriage assembly off the lead screw while withdrawing the stepper motor.

h. To install stepper/carriage assembly, reverse procedure. Note steps i. and j.

i. When installing the carriage, set the pre-load nut in the #3 notch (Ref. Figure 7-2).

j. When threading lead screw into carriage assembly, push the pre-load nut slightly against the spring to start the thread. After threading, insure that there is a gap between the pre-load nut and the rear of the carriage.

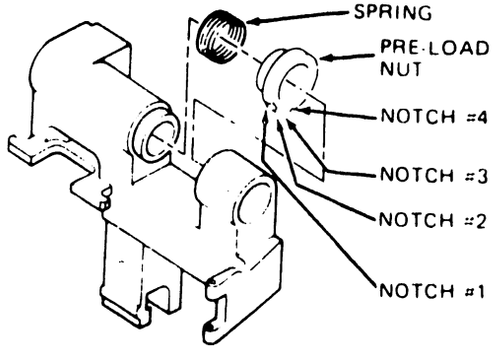

Figure 7-2 Pre-Load Setting

7.12 READ/WRITE HEAD LOAD BUTTON

a. To remove the old style button (attached with a clip and washer), grasp the button with pliers and rock the button back and forth while pulling.

b. To remove the new style button, hold the load arm out away from head, squeeze the locking tabs together with a pair of needle nose pliers and press forward.

c. To install old style button, place button in head load arm and press rubber washer onto button stem. Press clip onto stem and insure button does not move.

d. To install new style button, press the button into the head load arm and it will snap into place.

7.13 Cartridge Guide Adjustment

a. Insert the adjustment tool (726-9612) through the hole in the cartridge guide and screw completely into the casting (hand tight).

b. Loosen 2 screws holding the cartridge guide to the latch plate.

c. Move the handle into the latched position and hold it lightly against the latch fingers.

d. Tighten 2 screws holding the cartridge guide to the latch plate.

e. Depress push bar on front panel and check that door stays in latched position. If door latch was released, repeat adjustment.

f. Insert diskette, close and open door, checking for proper operation.

NOTES

8. PARTS DIAGRAMS

General

The Illustrated Parts Catalog is arranged so that the figures will always precede the parts listings and when possible be on the opposite page.

The first number in the list will always refer to the figure and the second number to the reference number of the part within the figure.

When an assembly is referred to within a figure and a further breakdown is shown on another figure then the reference figure will be called out.

Indented Level

The parts list is idented to show the levels of assembly within a figure. The major assembly will always be level 1, all parts or assemblies that attach to that assembly will be level 2 and assemblies within level 2 will have their attaching parts level 3 and so on.

Quantity Per Assembly

The quantity listed is the quantity used on the major assembly. Major Assemblies will never have a quantity listed.

Numerical Index

The numerical index lists all parts in part number sequence and is cross-referenced to the figure and reference number.

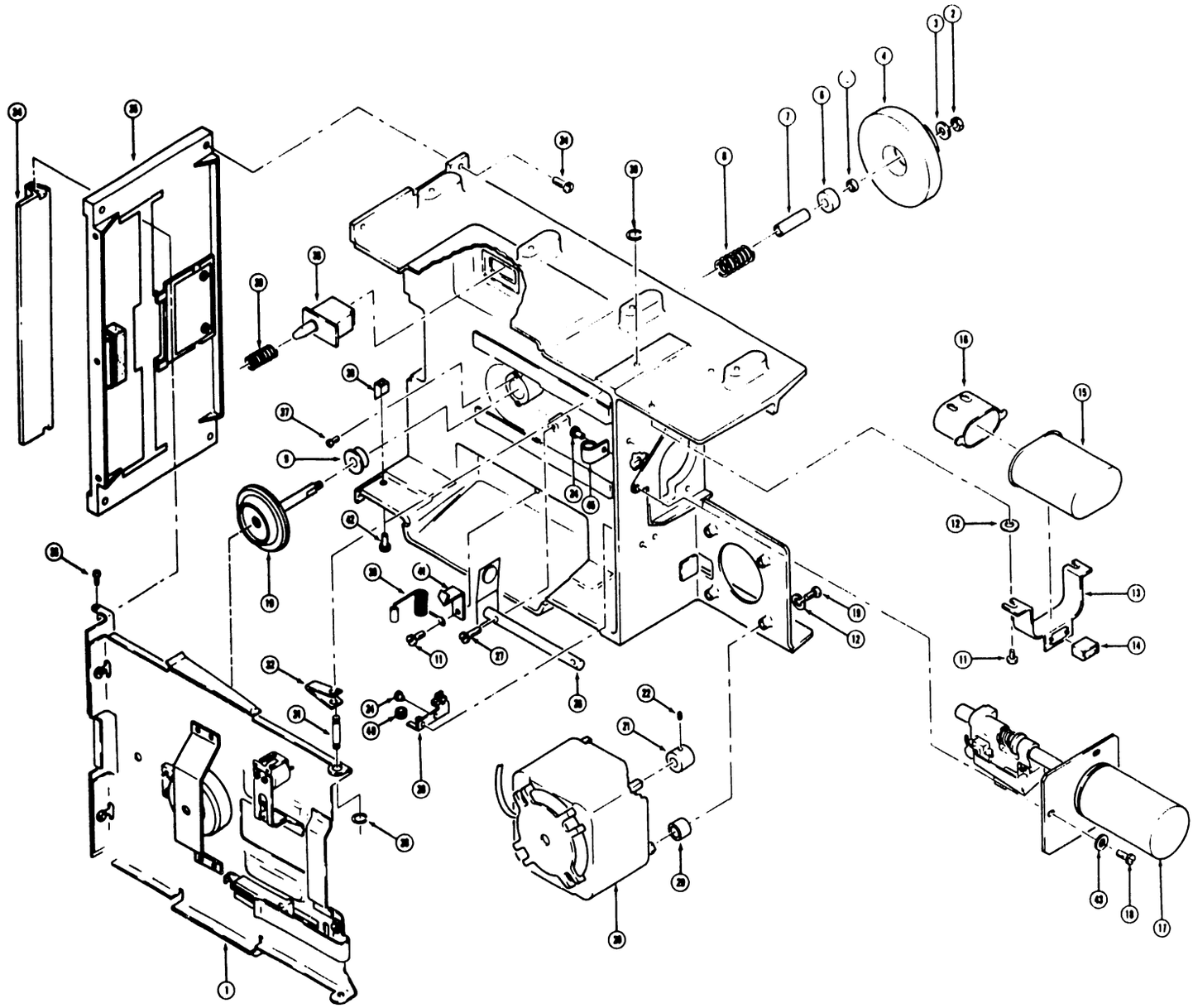

Figure 8-1 (1 of 2)

FIGURE & REF. NUMBER	PART NUMBER	DESCRIPTION 1 2 3 4	QTY PER ASM
1			
	50010	BASIC ASSEMBLY, SA 900/901	
- 1	50030	. CARTRIDGE GUIDE ASSEMBLY (OLD, See Fig. 3)	1
	50550	. CARTRIDGE GUIDE ASSEMBLY (NEW, See Fig. 6)	
- 2	10025	. NUT, 8-32	1
- 3	12509	. WASHER, #8 SPRING	2
- 4	50016	PULLEY ASSEMBLY, SPINDLE	1
- 5	50019	. SPACER, SPINDLE-SHORT	1
- 6	10800	. BEARING, SPINDLE	1
- 7	50018	. SPACER, SPINDLE—LONG	1
- 8	50166	. SPRING, SPINDLE	1
- 9	10801	. FLANGED BEARING, SPINDLE	1
- 10	50561	. HUB ASSEMBLY, SPINDLE	1
-11	12015	. SCREW, 8-32x.312	6
-12	12500	. WASHER, LOCK #8	2
-13	50098	. BRACKET	1
-14	10150	. HOUSING, 3 PIN CONNECTOR	1
-15	10095	. CAPACITOR, 110 V 50/60 HZ (BODINE MTR ONLY)	1
	15004	. CAPACITOR, 220 V 50/60 HZ or 110 V ORIENTAL MTR	1
-16	10148	. RUBBER BOOT	1
-17		. STEPPER/CARRIAGE ASSEMBLY (SEE FIGURE 2 FOR BREAKDOWN)	1
-18	12027	. SCREW, 6-32x.500	3
-19	12028	. SCREW, 8-32x.500	4
-20	50423	. MOTOR, 110 VOLT 50/60 HZ KIT	1
	50301	. MOTOR, 208/230/220 VOLT 50/60 HZ	1
-21	50358	. PULLEY, 60 HZ	1
	50357	. PULLEY, 50 HZ	1
-22	11904	. SCREW, SET 6-32x.125	1
-23	10378	. CABLE CLAMP, 1/8 INCH	1
-24	12013	. SCREW 6-32x.312 (12014 FOR ZINC FACE PLATE)	7
- 25	12016	. SCREW 8-32x.375	1
- 26	50522	. SPRING/GUIDE ASM	1
- 27	12012	. SCREW, 4-40x.375	4
- 28	50121	. DETECTOR ASSEMBLY, TRACK 0	1
- 29	50602	. SPACER	4
- 30	50186	. SPRING ASSEMBLY, DOOR OPEN (OLD STYLE)	1
	50582	. SPRING ASSEMBLY, DOOR OPEN (NEW STYLE)	1
	50583	. SPRING ASSEMBLY, DOOR OPEN (HORZ. MNT. PCB DOWN)	
- 31	50167	. PIVOT TOP	1
- 32	50168	. SPRING, BIAS	1
33	11905	. SCREW, B.V.	2
34	50142	. HANDLE	1
35	50527	. FRONT PLATE ASSEMBLY (SEE FIGURE 4 FOR BREAKDOWN)	1
- 36	17200	. SWITCH, DOOR OPEN	1
- 37	12011	. SCREW, 4-40x.250	2
- 38	11305	. CLIP	2
- 39	50487	. DEFLECTOR	2
-40	50578	. GROMMET	1
-41	50523	. LOCATOR	1
-42	12020	. SCREW 8-32x.500	2
-43	10013	. WASHER, #6 FLAT	3

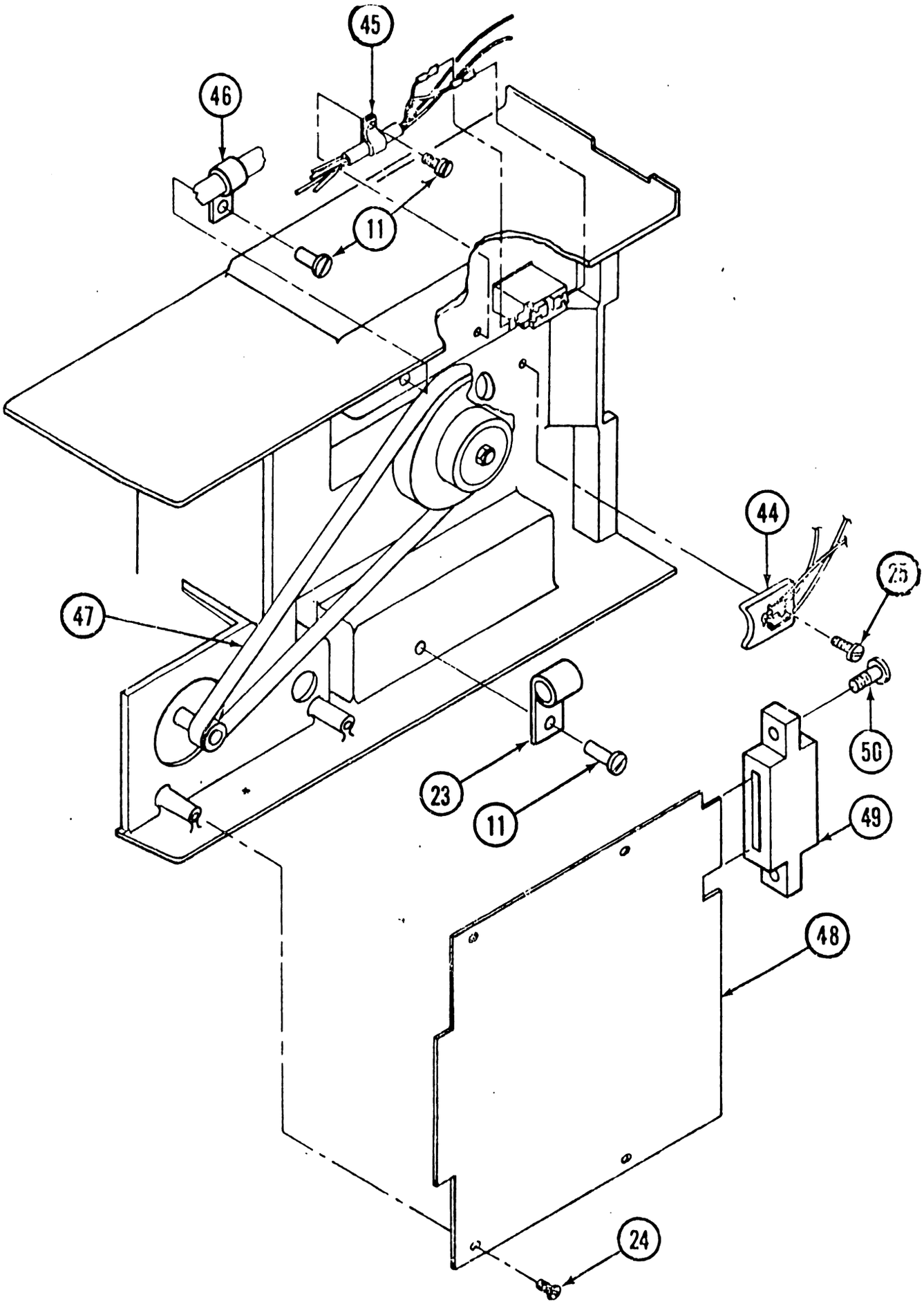

Figure 8-1(2 of 2)

FIGURE & REF. NUMBER	PART NUMBER	DESCRIPTION 1 2 3 4	QTY PER ASM.
1 -44	*50128	. PHOTRANSISTOR AND CABLE ASSEMBLY	1
-45	10375	. CABLE CLAMP, 3/16"	2
-46	10264	. CABLE CLAMP, 3/8"	1
-47	50356	. BELT (60 HZ)	1
	50355	. BELT (50 HZ)	1
-48	25002	. PCB (SA 900, -5V, NO DATA SEP)	1
	25003	. PCB (SA 900, -12/-15V, NO DATA SEP)	
	25004	. PCB (SA 900, -5V, WITH DATA SEP)	
	25005	. PCB (SA 900, -12/-15V, WITH DATA SEP)	
	25006	. PCB (SA 901, -5V)	
	25007	. PCB (SA 901, -12/-15V)	
-49	10140	. BLOCK, PCB CONN	1
-50	10176	. SCREW, 4-40x.500	2

* WHEN ORDERING A REPLACEMENT PHOTOTRANSISTOR ASSEMBLY, IF OLD ASSEMBLY HAS ONLY TWO (2) LEADS COMING FROM IT, ORDER FIELD KIT, P/N 50928.

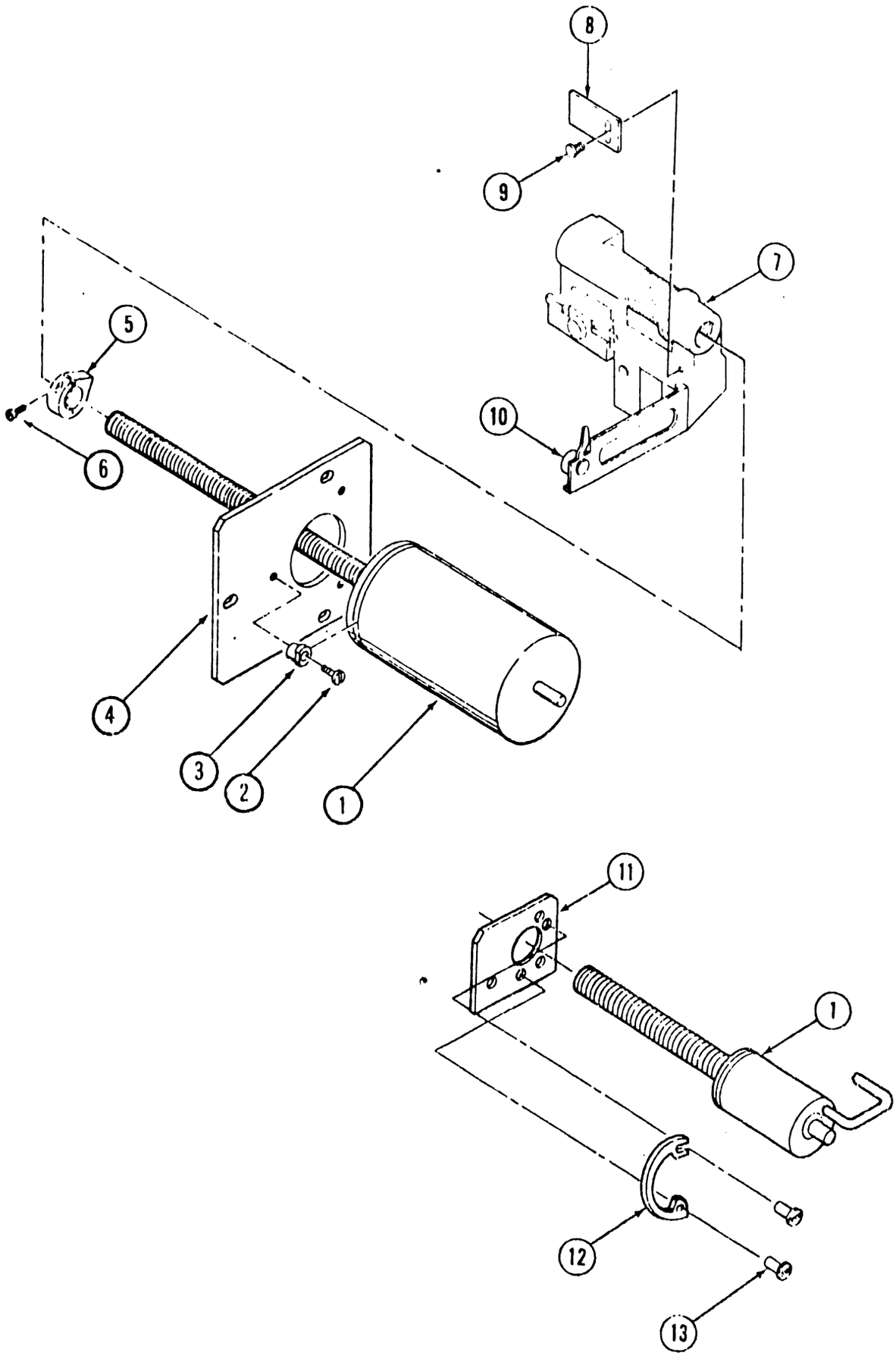

Figure 8-2

FIGURE & REF. NUMBER	PART NUMBER	DESCRIPTION 1 2 3 4	QTY PER ASM.
2 -		STEPPER/CARRIAGE ASSEMBLY	
- 1	50130	. STEPPER MOTOR ASSEMBLY	1
- 2	11910	. SCREW, B.H. 4-40x.250	3
- 3	50113	. CLEAT, MOTOR MOUNT	3
- 4	50112-0	. PLATE, STEPPER MOTOR (OLD STYLE)	1
- 5	50245	. STOP, LIMIT-LEAD SCREW	1
- 6	11903	. SCREW, CAP 2-56x.250	1
- 7	50562	. CARRIAGE ASSEMBLY (CERAMIC HEAD)	1
- 8	50529	. . FLAG, TRACK 0	1
- 9	11910	. . SCREW 4-40x.250	1
- 10	50929	. . LOAD BUTTON KIT (METAL LOAD ARM)	1
	50542	. . LOAD BUTTON (PLASTIC LOAD ARM)	
- 11	50112-1	. PLATE, STEPPER MOTOR (NEW STYLE)	1
- 12	50584	. MOUNTING CLAMP	1
- 13	10205	. SCREW, 8-32x.375	2

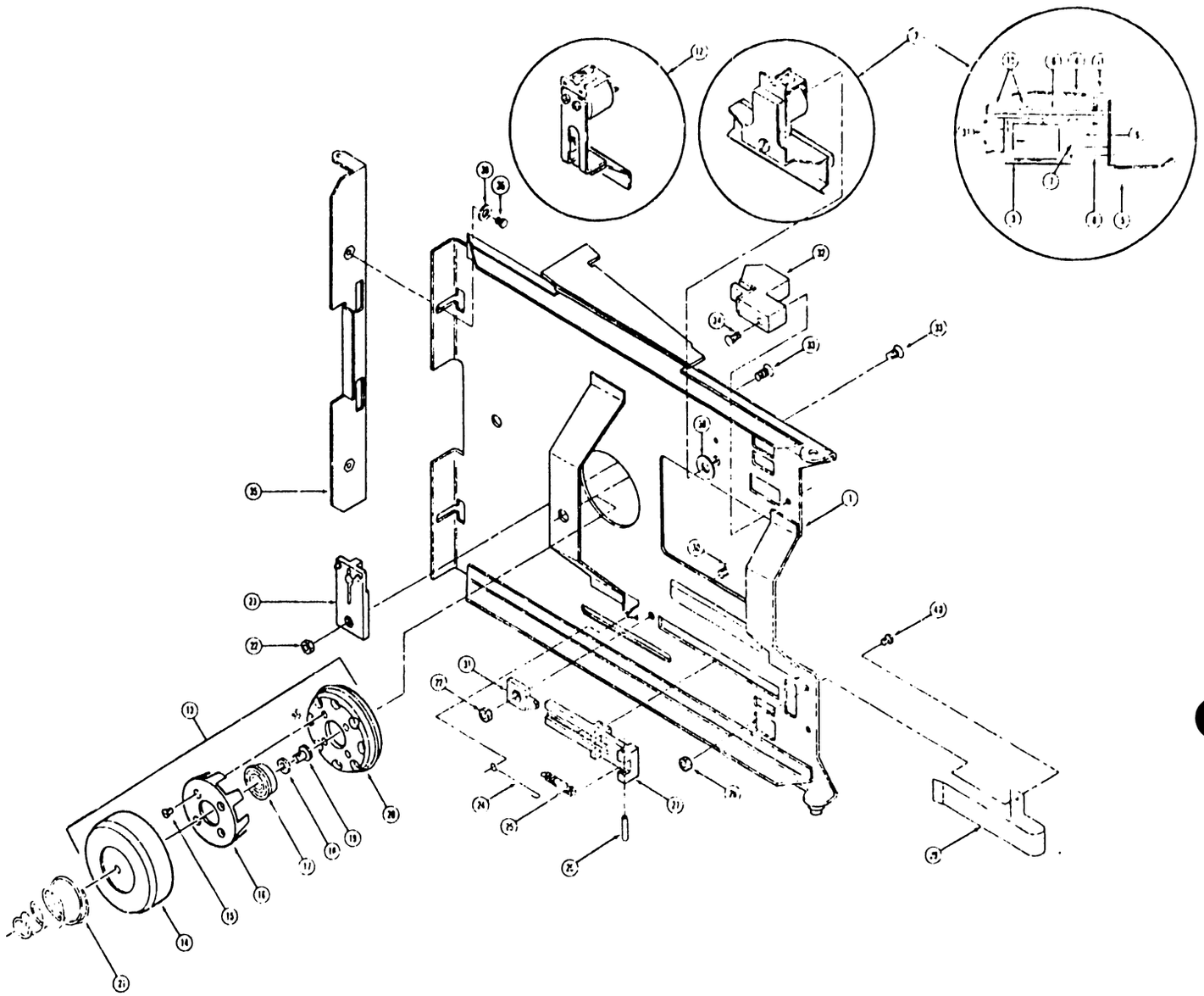

Figure 8-3

FIGURE & REF. NUMBER	PART NUMBER	DESCRIPTION 1 2 3 4	QTY PER ASM.
3 -			
-	50030	CARTRIDGE GUIDE ASSEMBLY	
- 1	50034	. CARTRIDGE GUIDE WELDMT.	1
- 2	50253	. ACTUATOR ASSEMBLY (NEW STYLE)	1
- 3	10002	. . COIL ASSEMBLY	1
- 4	50365	. . BAIL	1
- 5	50043	. . LOAD PAD	1
- 6	50364	. . ARMATURE	1
- 7	50265	. . CLAMP	1
- 8	50363	. . UP-STOP	1
- 9	11916	. . SCREW, B.H. 3-48 x .250	1
-10	10170	. . SCREW, B.H. 6-32 x .125	4
-11	10174	. . SCREW, B.H. 4-40 x .375	1
-12	50139	. ACTUATOR ASSEMBLY (OLD STYLE)	1
-13	50254	. HUB CLAMP ASSEMBLY	1
-14	50252	. . LIFTER	1
-15	11307	. . RIVET, TUBULAR 3/32 x 3/16	4
-16	50251	. . ARACHNID, FINGER RING	1
-17	10801	. . BEARING, FLANGED	1
-18	12503	. . WASHER, FLAT	1
-19	12011	. . SCREW, B.H. 4-40 x .250	1
-20	50000	. . HUB, CLAMP	1
-21	50031	. SPRING, COMPRESSION	1
-22	10024	. NUT, 6-32	2
-23	50032	. LED ASSEMBLY, INDEX/SECTOR	1
-24	50359	. HOOK, SPRING	1
-25	50146	. SPRING, EJECTOR	1
-26	11800	. PIN ROLL	1
-27	50140	. EJECTOR	1
-28	10023	. NUT, 4-40	2
-29	50141	. CLAMP, SPRING	1
-30	11900	. SCREW, FH 6-32 x .250	1
-31	50412	. STOP, EJECTOR	1
-32	50313	. DETECTOR ASSEMBLY, WRITE PROTECT	1
-33	11906	. SCREW, FH 6-32 x .375	
-34	10177	. SCREW, 4-40 x .625	2
-35	50151	. PLATE, LATCH	1
-36	10186	. SCREW, 6-32 x .188	1
-37	50256	. SPRING	1
-38	50282	. SHIM WASHER	1
-39	10013	. WASHER, #6 FLAT	2
-40	10172	. SCREW 4-40 x .250	2

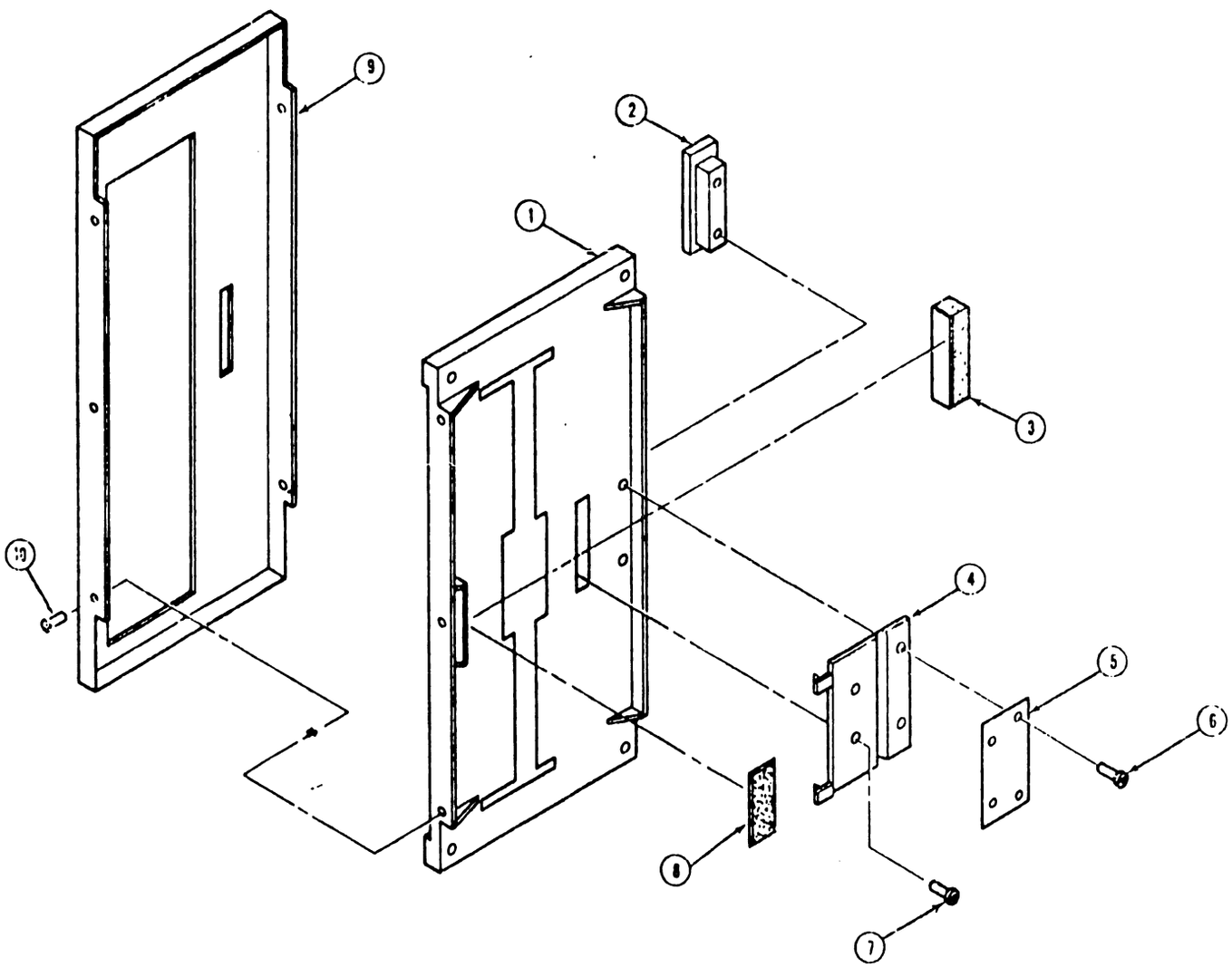

Figure 8-4

FIGURE & REF. NUMBER	PART NUMBER	DESCRIPTION 1 2 3 4	QTY PER ASM.
4-	50527	FRONT PLATE ASSEMBLY (WITHOUT LITE)	
	50610	FRONT PLATE ASSEMBLY (WITH LITE)	
-1	50349	. FRONT PLATE	1
-2	50143	. PUSH BUTTON (WITHOUT LITE)	1
	50586	. PUSH BUTTON (WITH LITE)	1
-3	50183	. BUMPER	1
-4	50156	. LATCH	1
-5	50157	. SPRING PLATE	1
-6	10188	. SCREW B.H. 6-32x.312	2
-7	11905	. SCREW B.V.	2
-8	50580	. SNATCH	1
-9	50257	COVER; FRONT 5-1/4 x 11 WHITE	1
	50258	COVER, FRONT 5-1/4 x 11 TAN	1
	50260	COVER, FRONT 5-1/4 x 10 WHITE	1
	50261	COVER, FRONT 5-1/4 x 10 TAN	1
	50263	COVER, FRONT 4-5/8 x 10-1/2 WHITE	1
	50264	COVER, FRONT 4-5/8 x 10-1/2 TAN	1
-10	10261	SCREW, FL. HD. 4-40x.250	5

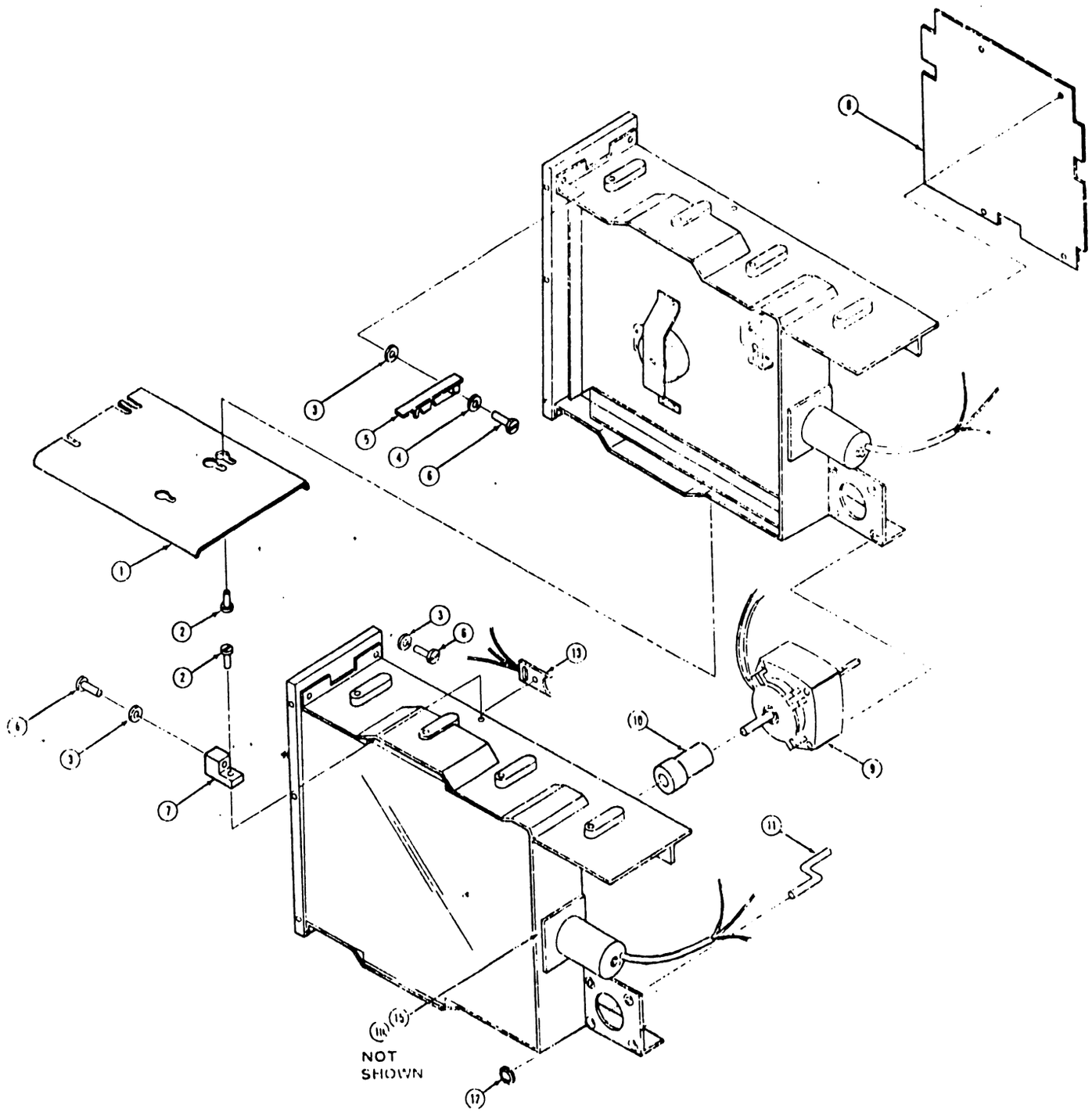

Figure 8-5

FIGURE & REF. NUMBER	PART NUMBER	DESCRIPTION 1 2 3 4	QTY PER ASM.
5-	50410	BASIC DRIVE ASSEMBLY, 902 RIGHT DRIVE	1
- 1	50431	. PLATE, JUNCTION	2
- 2	10204	. SCREW, 8-32x.312	9
- 3	50453	. SPACER	3
- 4	10013	. WASHER	1
- 5	50455	. CLIP, LOCKING	1
- 6	10191	. SCREW, 6-32x.500	3
- 7	50452	. BLOCK, LOCKING CLIP	1
- 8	25037	. PCB R/W -5V	1
	25038	. PCB R/W -15V	1
	25039	. PCB R/W WITH DATA SEP -5V	1
	25040	. PCB R/W WITH DATA SEP - 15V	1
- 9	50458	. MOTOR 110VAC	1
	50459	. MOTOR 220VAC	1
-10	50432	. PULLEY 60Hz	1
	50451	. PULLEY 50Hz	1
-11	50465	. HOOK, BELT	1
-12	11306	. GRIP RING	1
-13	50484	. PHOTO TRANSISTOR ASSEMBLY RIGHT DRIVE	1
-14	50463	. TRACK 00 DETECTOR ASSEMBLY (RT DRV)	1
-15	50462	. WRITE PROTECT ASSEMBLY (RT DRV)	1

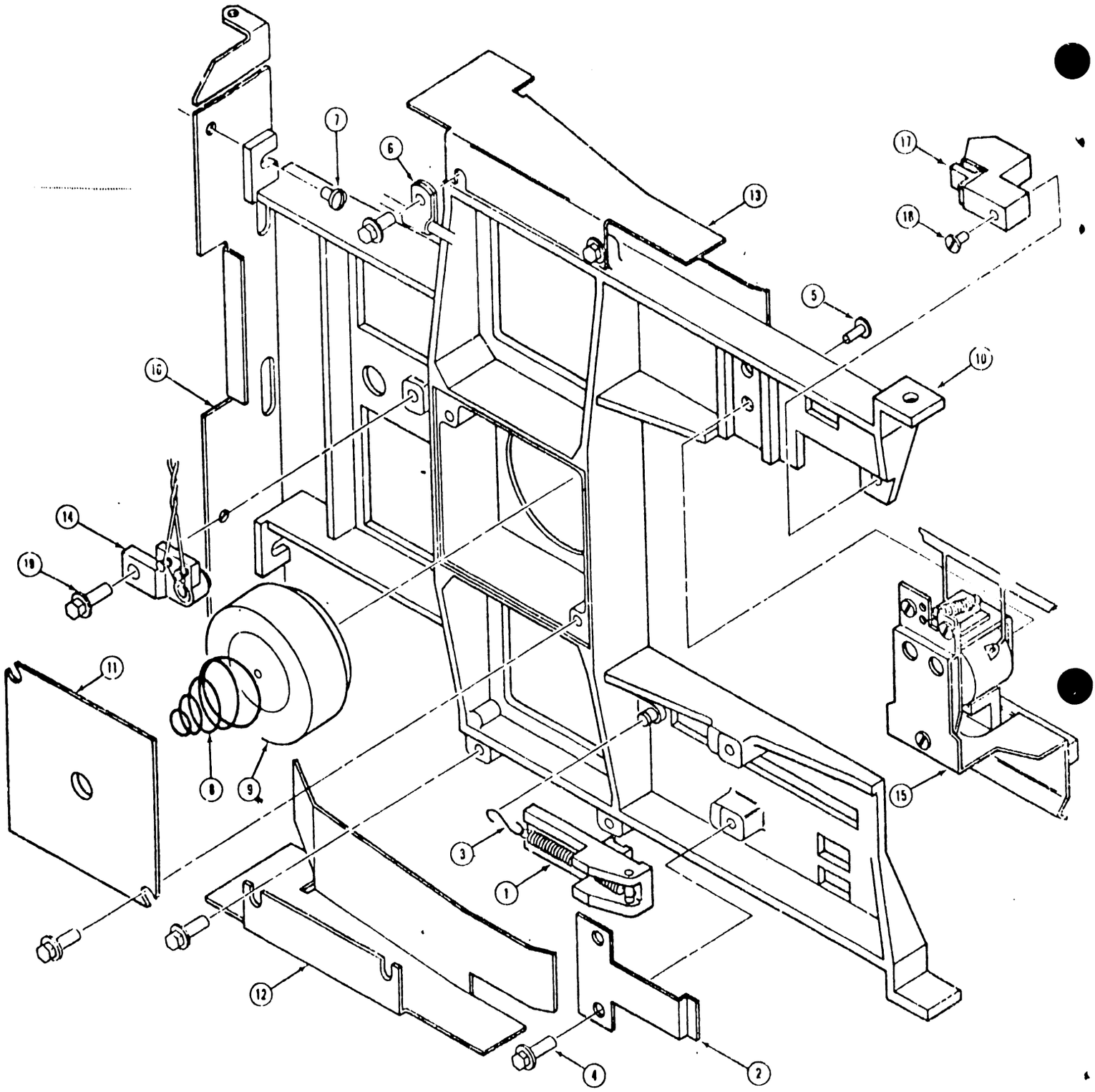

Figure 8-6

FIGURE & REF. NUMBER	PART NUMBER	DESCRIPTION 1 2 3 4	QTY PER ASM.
6 -	50550	CARTRIDGE GUIDE ASSEMBLY (BASIC)	
	50603	CARTRIDGE GUIDE ASSEMBLY (902 RIGHT)	
1	50609	. EJECTOR ASSEMBLY	1
2	50555	. SPRING, CLAMP, EJECTOR	1
3	50556	. HOOK, SPRING	1
4	12015	. SCREW 8-32 x .312	9
5	12013	. SCREW 6-32 x .312	1
6	10378	. CLAMP, CABLE	1
7	10187	. SCREW 6-32 x .250	2
8	50031	. SPRING, HUB CLAMP	1
9	50254	. HUB CLAMP ASSEMBLY	1
10	50544	. GUIDE	1
11	50546	. PLATE, HUB CLAMP	1
12	50547	. STRIPPER, BOTTOM	1
13	50548	. STRIPPER, TOP	1
14	50557	. L.E.D. ASSEMBLY	1
15	50558	. HEAD LOAD ACTUATOR ASSEMBLY	1
16	50579	. LATCH PLATE	1
17	50313	. WRITE PROTECT DETECTOR ASSEMBLY	1
18	12026	. SCREW 4-40 x .625	1
19	12016	. SCREW	2

PART NUMBER	FIG. REF.
10002	3-3
10013	1-43
	3-39
	5-4
10023	3-28
10024	3-27
10025	1-2
10035	1-15
10140	1-49
10148	1-16
10150	1-14
10170	3-10
	3-40
10172	2-9
10174	3-11
10176	1-50
10177	3-34
10186	3-36
10187	6-7
10188	1-29
	4-6
10191	5-6
10204	5-2
10205	2-13
10261	4-10
10264	1-46
10375	1-45
10378	1-23
	6-6
10800	1-6
10801	1-9
	3-17
11305	1-38
11306	5-12
11307	3-15
11800	3-26
11900	2-30
11903	2-6
11904	1-22
11905	1-33
	4-7
11906	3-33
11910	2-9
11916	3-9
12011	1-37
	3-19
12012	1-27
12013	1-24
	6-5

PART NUMBER	FIG. REF.
12015	1-11
	6-4
12016	1-25
	6-19
	2-2
12020	1-42
12026	6-18
12027	1-18
12028	1-19
12501	1-12
12503	3-18
12509	1-3
15004	1-15
17200	1-36
25002	1-48
25003	1-48
25004	1-48
25005	1-48
25006	1-48
25007	1-48
25037	5-8
25038	5-8
25039	5-8
25040	5-8
50000	3-20
50010	1
50016	1-4
50018	1-7
50019	1-5
50030	1-1
	3
50031	3-21
	6-8
50032	3-23
50034	3-1
50043	3-5
50098	1-13
50112-0	2-4
50112-1	2-11
50113	2-3
50121	1-28
50128	1-44
50130	2-1
50139	3-12
50140	3-27
50141	3-29
50142	1-34
50143	4-2

PART NUMBER	FIG. REF.
50146	3-25
50151	3-35
50156	4-4
50157	4-5
50166	1-8
50167	1-31
50168	1-32
50183	4-3
50186	1-30
50245	2-5
50251	3-16
50252	3-14
50253	3-2
50254	3-13
	6-9
50256	3-37
50257	4-9
50258	4-9
50260	4-9
50261	4-9
50263	4-9
50264	4-9
50265	3-7
50282	3-38
50301	1-20
50313	3-32
	6-17
50349	4-1
50355	1-47
50356	1-47
50357	1-21
50358	1-21
50359	3-24
50363	3-8
50364	3-6
50365	3-4
50410	5
50412	3-31
50423	1-20
50431	5-1
50432	5-10
50451	5-10
50452	5-7
50453	5-3
50455	5-5
50458	5-9
50459	5-9
50462	5-15

PART NUMBER	FIG. REF.
50463	5-14
50465	5-11
50484	5-13
50487	1-39
50522	1-26
50523	1-41
50527	1-35
	4
50529	2-8
50542	2-10
50544	6-10
50546	6-11
50547	6-12
50548	6-13
50550	1-1
	6
50555	6-2
50556	6-3
50557	6-14
50558	6-15
50562	2-7
50578	1-40
50579	6-16
50580	4-8
50582	1-39
50583	1-30
50584	2-12
50586	4-2
50602	1-44
50603	6
50610	4
50609	6-1
50928	1-44
50929	2-10

PART NO	VC	VENDOR PART NO	DESCRIPTION	RETAIL($US)	EXCHANGE
726-1000	80		DIODE 1N5231	4.00	
726-1001	80		XSTOR 2N3054	3.00	
726-1002	80		XSTOR 2N4013	7.00	
726-1003	80		XSTOR 40406	5.00	
726-1004	80	50929	LOAD BUTTON KIT-OLD	3.00	
726-1005	80	50542	LOAD BUTTON - NEW	3.00	
726-1006	80	50377	REPL BY 726-9612	10.00	
726-1007	80	50391	REPL BY 726-9613	10.00	
726-1008	80	SA120	REPL BY 726-9611	50.00	
726-1009	80	25005-4	PCB (SA901 -5V)	540.00	179.00
726-1010	80	50557	LED ASSY NEW TYPE	15.00	
726-1011	80	50558	ACTUATOR HEAD LOAD	24.00	
726-1012	80	50928	REPL BY 726-1020	26.00	
726-1013	80	17200	SWITCH DOOR OPEN	7.00	
726-1014	80	50121	REPL BY 726-1022	3.00	
726-1015	80	50355	REPL BY 656-0224	3.00	
726-1016	80		IC 74163	14.00	
726-1017	80	10109	REPL BY 330-3011	1.00	
726-1018	80	10375	REPL BY 654-1251	1.00	
726-1019	80	10105	RES 430 OHM 1/4W	3.00	
726-1020	80	50129-1	XSTOR PHOTO&CBL ASSY	26.00	
726-1021	80	50254	HUB CLAMP ASSY	20.00	
726-1022	80	10057	REPL BY 375-2103	3.00	
726-1023	80	50313	REPL BY 726-1022	3.00	
726-1024	80	50032	LED ASSY OLD STYLE	15.00	
726-1025	80	50130	STEPPER MTR ASSY	193.00	
726-1026	80	50443-2	MOTOR 110V 50/60HZ	143.00	
726-1027	80	50356	BELT 60HZ	10.00	
726-1028	80	50146	SPRING EJECTOR	2.00	
726-1029	80	50253	REPL BY 726-1011	24.00	
726-1030	80		POT 20K 3389S BOURNS	4.00	
726-1031	80		XSTOR PHOTO TIL 81	5.00	
726-1032	80		LED TIL31	9.00	
726-1033	80	50562	HEAD CARRIAGE ASSY	220.00	99.00
726-1034	80	10801	REPL BY 726-0914	4.00	
726-1035	80	50019	SPACER SPINDLE LONG	2.00	
726-1036	80	10800	REPL BY 465-0012	2.00	
726-1037	80	12509-0	WASHER SPRING	1.00	
726-1038	80	50141	CLAMP SPRING	3.00	
726-1039	80	ORDER 465-0012	BEARING SM:STPG MTR	4.00	
726-1040	80		BEARING LG:STPG MTR	9.00	
726-1041	80	50142	HANDLE DOOR	3.00	
726-1042	80	50349	PLATE FRONT	14.00	
726-1043	80	50143	PUSHBUTTON	3.00	
726-1044	80	50183	BUMPER FRONT PLATE	1.00	
726-1045	80	50156	LATCH FRONT PLATE	2.00	
726-1046	80	50157	SPRING PLATE	3.00	
726-1047	80	10188	SCREW BH 6-32X.312	1.00	
726-1048	80	11905	SCREW BV	1.00	
726-1049	80	50257	REPL BY 725-0053-91	10.00	

PART NO	VC	VENDOR PART NO	DESCRIPTION	RETAIL($US)	EXCHANGE
726-1050	80	50151	DOOR PLATE LATCH	6.00	
726-1051	80	17212	REPL BY 325-2307	2.00	
726-1052	80	17211	SW TRACK-M	5.00	
726-1053	80	54048	BELT DRIVE-M	10.00	
726-1054	80	54047	MOTOR DRIVE-M	57.00	
726-1055	80	54068	MOTOR STEPPING-M	54.00	
726-1056	80	54145	LOAD BUTTON ASSY-M	3.00	
726-1057	80	54066	HUB COLLET-M	13.00	
726-1058	80	54055	HEAD CARR ASSY-M	183.00	90.00
726-1059	80	54064	HEAD LOAD SOL ASSY-M	22.00	
726-1060	80	54135	INDEX DETECTOR ASSY-	11.00	
726-1061	80	54137	INDEX LED ASSY-M	12.00	
726-1062	80	25060	PCB LOGIC-M	250.00	107.00
726-1063	80	25063	PCB MOTOR CONTROL-M	44.00	
726-1064	80	54097	REPL BY 726-9614	50.00	
726-1065	80	50684	HUB POST	10.00	
726-1066	80	54122-0	NOT NORMALLY STOCKED	12.00	
726-1067	80	54123-0	NOT NORMALLY STOCKED	8.00	
726-1068	80	54135	BAIL LOAD -M	4.00	
726-1069	80	11312	LAMP ASSY ACTIVITY-M	20.00	
726-1070	80	50561	HUB ASSY SPINDLE	19.00	

APPENDIX A

SOFTWARE COMPATIBILITY

The following information was reprinted from 700-4369A, 3740 Diskette Compatibility Software Users Manual.

CHAPTER 1

GENERAL INFORMATION

1.1 SOFTWARE OVERVIEW

Wang's 3740 Diskette Compatibility Software, designed for use with Wang's IBM 3740 Compatible Diskette Drive, provides a set of utility programs which implement operations such as the following:

- displaying a 3740 diskette catalog, thereby providing the names of stored files and the addresses of each file's reserved and used sectors,
- displaying 3740 sector dumps for the sectors in a specified address range,
- performing media conversion of Wang disk/diskette files* to 3740 diskette files, or vice versa, and
- producing hardcopy of a specified 3740 diskette file, or a Wang diskette file previously converted from a 3740 diskette.

The software also provides utility subroutines which can be integrated with user-written BASIC language application programs where 3740 diskettes are to be accessed directly for file creation or maintenance. The subroutines handle the following types of operations:

- opening a new or existing file,
- reading, rereading, or writing a sector,
- skipping or backspacing a specified number of sectors,
- writing or updating an "end of data" pointer position, and
- closing a file.

---

* The 3740 Diskette Compatibility Software processes TC formatted Wang files (maximum record length 128 bytes).

Wang's Model 2270A (IBM 3740 Compatible) single, dual, or triple diskette units (unlike the Model 2270 units) have the necessary hardware and firmware to sense whether an IBM 3740 or a Wang diskette is currently mounted at a disk location where a read or write operation is to be executed; however, compatibility software is needed when data is to be stored on, retrieved from, or converted to a 3740 diskette by a Wang system. The software is not needed for normal operations with Wang diskettes.

1.2 MEDIA DIFFERENCES

IBM's 3740 Data Entry System encompasses such equipment as the single operator 3741 Data Station and the 3742 Dual Data Station. These "key to diskette" data stations store data on diskettes resembling the diskettes used in Wang systems.

A "diskette" is a thin, flexible disk platter 7.5 inches (19 cm) in diameter, about the size of a 45 rpm phonograph record, enclosed in an 8 by 8 inch (20 by 20 cm) semi-rigid protective plastic jacket. The diskette turns freely within the jacket, and is coated on one side with magnetic material arranged in concentric circular tracks. When formatted (initialized), the tracks are divided into "sectors" with unique, randomly accessible addresses, thereby providing a rapid, direct access method for data storage and retrieval. Although these general facts apply to both Wang and IBM diskettes, important differences usually preclude exchange of diskette files between Wang and IBM systems; however, with Wang's IBM 3740 Compatible Diskette Drive and the software described in this manual, 3740 diskette files can be read into a Wang system for subsequent processing. Also, data processed in a Wang system can be stored on 3740 diskettes and used as input to any system equipped to read 3740 diskette files.

Visual Differences and Mounting Instructions

A permanent label with the name "Wang Diskette" and part number WLI No. 177-0063 identifies a diskette used in Wang Model 2270 or 2270A type drives. The elongated label has arrows marked "Insert" and "Up" showing how to position a diskette before mounting in a drive (see Figure 1-1); a third arrow points to the "write protect" hole. As indicated by instructions on the label, the write protect hole prevents writing when uncovered, and permits writing when covered by a tab.

A small, square, permanent label with the name "IBM Diskette" and Part No. 2305830 (Record Length 128 Bytes) identifies a standard diskette used by 3741 and 3742 data station operators. No arrows show how to position a 3740 diskette before mounting in a drive. To mount a 3740 diskette in one of Wang's IBM 3740 compatible drives, the diskette is held edgewise with the label on the right side, in the lower corner away from the drive door, as shown in Figure 1-2.

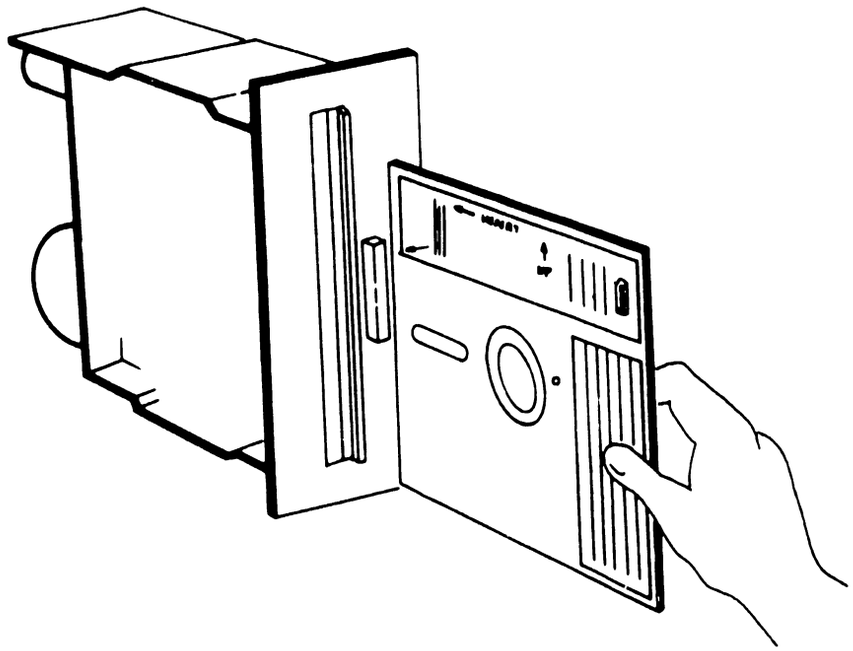

Figure 1-1. Mounting a Wang Diskette

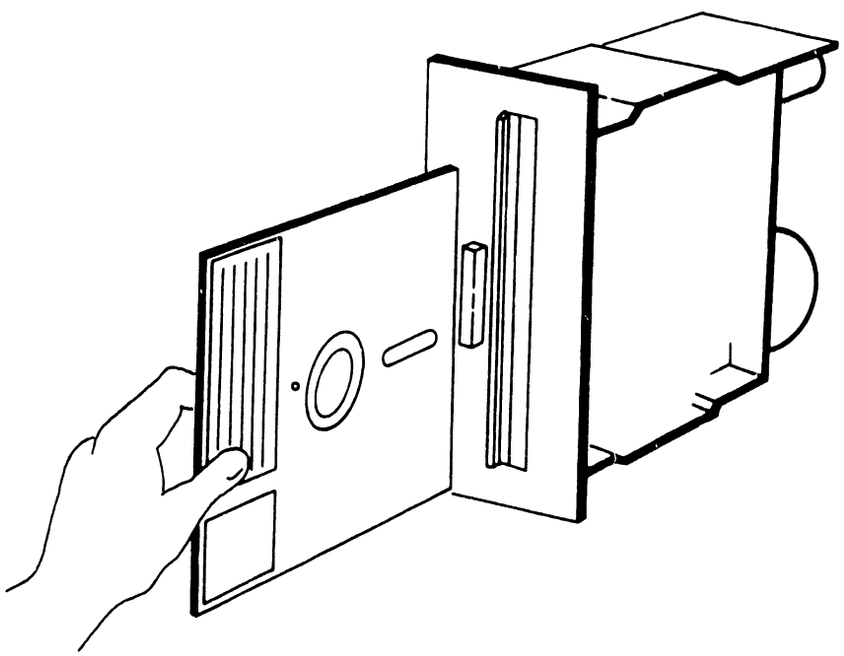

Figure 1-2. Mounting a 3740 Diskette

Other Significant Differences

For background information, other differences between IBM 3740 and Wang diskettes are summarized here:

- A Wang diskette has 32 small index holes around its central mounting hole; a 3740 diskette has only one index hole.
- The tracks on Wang diskettes are divided into 16 equal sectors per track, with a 256-byte capacity per sector; the tracks on 3740 diskettes are divided into 26 equal sectors per track, with a 128-byte capacity per sector.
- Sector addressing notation differs. On Wang diskettes, the first sector has address zero. On 3740 diskettes, the first sector has address 16,384 in Wang notation; the second sector has address 16,385, etc. The sectors are arranged and numbered consecutively on 3740 diskettes, but a staggered (interlaced) arrangement of the sequentially numbered sectors on Wang diskettes increases performance during multi-sector read/write operations.
- Catalog index layouts differ.
- Timing mark conventions, used to identify stored data files, differ.
- Data is recorded in different code sets--Wang uses USASCII (United States of America Standard Code for Information Interchange) while IBM uses EBCDIC (Extended Binary Coded Decimal Interchange Code).
- Valuable data stored on a Wang diskette can be protected against accidental overwriting by uncovering the write protect hole; no such feature exists on 3740 diskettes.
- A Wang diskette can be formatted (initialized) in the leftmost drive by pressing the recessed format button; a 3740 diskette must be purchased preformatted or be formatted by an IBM 3740 system if the diskette is to be used for data storage or retrieval in a Wang system.

Programming Differences

For Wang diskettes, read and write operations can be controlled via the disk statements described in the Disk Reference Manual provided with a Wang system, or any available disk utility software can be used. All information pertaining to the Model 2270 single, dual, or triple diskette units can be applied unchanged to comparable units of Wang's 3740 Compatible Diskette Drive when using Wang diskettes to store or retrieve diskette files.

By contrast, if a 3740 diskette is mounted in one of Wang's IBM 3740 Compatible Diskette Drives, none of the Automatic File Cataloging Mode disk statements can be used to control read and write operations on 3740 diskettes. Only five of the Absolute Sector Addressing Mode disk statements can accommodate the 3740 sector addresses; the statements are:

```
DATALOAD BA        DATALOAD DA        COPY.
DATASAVE BA        DATASAVE DA
```

Furthermore, since Wang's disk statements are designed to read and write information in 256-byte sectors rather than the 128-byte sectors formatted on 3740 diskettes, special programming techniques must be employed to prevent loss of 128 bytes of valid data when information is transferred from the CPU to the disk controller for storage in a 3740 sector. Similarly, since the disk controller automatically supplies zero fill information after reading a 128-byte 3740 sector, programming techniques must recognize that valid data can lie only in the first 128 bytes of information resulting from the reading of a 3740 sector. Also, since the disk controller supplies a non-zero value in the 129th byte if a deleted or bad 3740 sector is read, the 129th byte position should be checked before processing the first 128 bytes of information. During a writing operation to a 3740 diskette, the 129th byte should be set to zero as a preferred technique.

Because the differences between Wang and IBM 3740 diskettes impose programming constraints of considerable magnitude, Wang Laboratories recommends use of its 3740 Compatibility Software to simplify application programming requirements associated with data storage or retrieval using 3740 diskettes. With the compatibility software, differences between 3740 and Wang diskettes become essentially transparent to the programmer.

1.3 DISKETTE STORAGE CONSIDERATIONS

On 3740 diskettes, there are 77 tracks numbered from 0 through 76, beginning with the outermost track; each track is divided into 26 sectors with a storage capacity of 128 bytes per sector. Track 0, called the index track, is reserved for information describing the diskette's contents, and the last two tracks (75 and 76) are reserved for use as replacements for defective tracks. Thus, the maximum space utilized for storage of data files (called data sets by IBM) is 74 by 26 by 128 or 246,272 bytes.

The "extent" of each data set is given in the 3740 index track in the form of three addresses associated with each named data set. See Figure 1-3 and Appendix B.

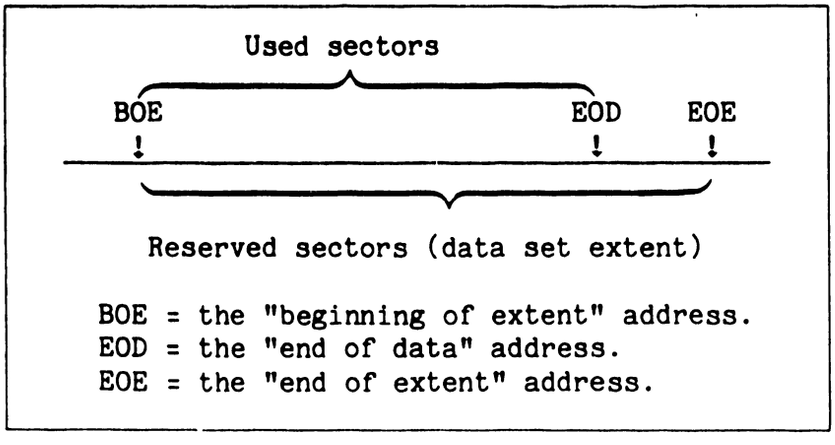

Figure 1-3. Storage Addresses for 3740 Files

On Wang diskettes, there are 77 tracks numbered from 0 through 76 and each track is divided into 16 sectors with a storage capacity of 256 bytes per sector. Only 64 tracks are accessible for disk operations via Model 2270 type diskette units, but all 77 tracks are accessible via Model 2270A type diskette units if the SCRATCH DISK statement parameter END is set to 1231 instead of 1023 when initializing a diskette.

The reserved catalog index space on a Wang diskette, user-selectable via the value assigned to the parameter LS in the SCRATCH DISK statement used to initialize the diskette, can be any number of sectors from 1 to 255 (24 is the default value). Thus, the maximum space available for storage of files on Wang diskettes varies, but the capacity in bytes can be calculated as follows:

A = 262144 - 256*n (for Model 2270 units)

= 315392 - 256*n (for Model 2270A units)

where n = the value assigned to LS when scratching a diskette.

For media conversion from a 3740 diskette to a Wang diskette, only two sectors need be reserved for the catalog index since the 3740 index track accommodates a maximum of 19 file entries. The first sector in the Wang diskette catalog index can hold 15 file entries; the other sectors can hold 16 file entries each.

> NOTE:
>
> All Wang diskettes formatted in Model 2270 diskette units are "upward" compatible with Model 2270A units. If "downward" compatibility between Model 2270A and 2270 units is desired, do not take advantage of the 77 track read/write feature when scratching a diskette in a Model 2270A drive, i.e., set END = 1023, not 1231.

1.4 MIXED MEDIA ERROR CONDITIONS

The disk controller in Wang's 3740 Compatible Diskette Drive determines whether a disk read or write operation applies to a Wang or a 3740 diskette by the sector address (i.e., whether the address is less than 16,384 or not). The disk controller also senses which type of diskette (Wang or 3740) is mounted in a drive by the number of index holes on the diskette.

Accordingly, if either one of the following conditions occurs, an error code (ERR 64) interrupts a disk operation:

a) a Wang diskette operation (sector address less than 16,384) is attempted on a 3740 diskette (only one index hole), or

b) a 3740 diskette operation (sector address equal to or greater than 16,384) is attempted on a Wang diskette (32 index holes).

Then, corrective action can be taken.

1.5 CPU AND PERIPHERAL REQUIREMENTS

Two disk drives (minimum) are required to use Wang's 3740 Diskette Compatibility Software. One Model 2270A (IBM 3740 Compatible) drive is needed for mounting a 3740 diskette to be used for data storage or retrieval. Another 2270A drive, or any other disk/diskette drive in the system, is needed for mounting a platter containing the software or a user-written program. If a system has an IBM 3740 compatible single diskette unit, the unit must be used in conjunction with a fixed/removable disk drive, or must be upgraded to a dual diskette drive unit.

The central processor of the Wang system must be a 2200T, a 2200VP, or any Wang CPU which provides the full BASIC or BASIC-2 instruction set. A 12K-byte minimum memory size is sufficient for the software system. The subroutines, if appended to a user-written application program, require only 4.5K bytes of memory.

A printer is needed for those operations where hardcopy output of a 3740 diskette file or a Wang file (converted from a 3740 diskette) is desired.

1.6 SOFTWARE BACKUP

The software system on the master diskette obtained from Wang Laboratories should be kept in reserve, as a backup system, after copying the software to another diskette or a fixed/removable disk platter (depending upon the available peripherals in the system being used). The software can be copied using Wang's Integrated Support System (ISS) utilities, if available. Also, the software can be copied using the COPY statement if the diskette drive is a dual or triple unit. (See the general form of the COPY statement in the Disk Reference Manual.)

If a fixed/removable disk drive is available in addition to a single, dual, or triple 3740 Compatible Diskette Drive, the software system can be stored on the fixed disk or a removable disk platter without using ISS by repeating the following three-step procedure until every file listed in the master diskette catalog has been copied (all files are program files):

```
:CLEAR      EXEC
:LOAD DC {F} [/xyz,]   "name"   EXEC
         {R}
:SAVE DC {F} [/xyz,]   "name"   EXEC
         {R}
```

Keep in mind, however, that only unique file names can be stored on a particular platter; therefore, it may be necessary to use a different name when saving the START file.

CHAPTER 2

OPERATING INSTRUCTIONS

2.1 LOADING THE SOFTWARE SYSTEM

Mount the disk or diskette containing the 3740 software; then, key the following sequence:

```
CLEAR    EXEC
SELECT DISK xyy     EXEC      (replacing xyy by the proper address)
LOAD DC T "START"     EXEC
RUN      EXEC
```

If the software is mounted at a default disk location (310/B10), the SELECT statement may be omitted; then, F or R should replace T in the LOAD statement, depending upon whether the left or right drive is used. (Also, if the name START has been changed for the reason discussed in Section 1.6, use the appropriate name.)

The software system first provides displays indicating that the loading operation is in progress. No operator action is required until a prompt requests the addresses to be used for program loading, Wang TC formatted files, and 3740 (3741) files. No addresses need be supplied if the displayed default addresses are acceptable; however, if addresses other than the default values are desired, keep in mind that the program loading and TC formatted files addresses may be the same, but the 3740 files address must be unique.

After the disk addresses have been supplied (or the default addresses accepted), the system menu appears on the CRT. (See Figure 2-1.)

```
PRESS DESIRED FUNCTION KEY _


3741-2200 UTILITY SYSTEM

-------------------------------------------------------------
  FN KEY    DESCRIPTION              FN KEY    DESCRIPTION
-------------------------------------------------------------
   01 - CONVERT 3741 TO TC FORMAT   05 - LIST 3741 CATALOG
   02 - CONVERT TC FORMAT TO 3741   06 - DUMP 3741 SECTOR(S)
   03 - LIST 3741 FILE              07 - APPLICATION/SUBROUTINES
   04 - LIST TC FORMAT FILE         08 - CHANGE DISK ADDRESSES
        (CONVERTED 3741 FILE)       31 - RETURN TO 'START'
```

Figure 2-1. The System Menu

2.2 THE UTILITY PROGRAMS

The system menu displays the available utility programs and the special function keys by which they are accessed. After a special function key is depressed to access a particular program, operating instructions (prompts) appear on the CRT indicating when disk platters are to be mounted, and when input is required. No operational difficulties should arise if the prompts are followed carefully. For convenience, a summary of each program is given here, and the required input is indicated.

CONVERT 3741 TO TC FORMAT--converts a 3740 (3741) file to a Wang TC formatted file, and provides an option to rerun the program before returning to the system menu. The system creates fixed length records in the converted file by adding space characters, if necessary, to satisfy the record length specified in the 3740 index track. During file conversion, the display indicates the record currently being processed. Required information: (1) the input (3741) file name, (2) the output (Wang) file name, and (3) where to stop the conversion, i.e., 'EOD' (End Of Data) or 'EOE' (End Of Extent).

CONVERT TC FORMAT TO 3741--converts a Wang TC formatted file to a 3740 (3741) file, and provides an option to rerun the program before returning to the system menu. During file conversion, the display indicates the record currently being processed; records longer than 128 bytes are truncated. Required information: (1) the input (Wang) file name and (2) the output (3741) file name.

LIST 3741 FILE--provides hardcopy of a 3741 file on a printer (address 215). Records are read and dumped with no attempt to format the data; nonprintable characters are printed as question marks (?). The 3741 file is listed from BOE to EOE, i.e., from the beginning to the end of the reserved sectors. An end of data record, if encountered, is listed also and looks like the index entry with the name blanked. Required information: only the input (3741) file name.

LIST TC FORMAT FILE--provides hardcopy of a Wang TC formatted file on a printer (address 215). Records are read and dumped with no attempt to format the data; nonprintable characters are printed as question marks (?). Note: Records longer than 128 bytes are truncated, if encountered; however, truncation is not effective when listing a converted 3741 file since the maximum record length of such files is 128 bytes; truncation occurs on the hardcopy only, not on a disk or diskette. Required information: only the input (Wang) file name.

LIST 3741 CATALOG (Index Sectors)--displays a list of the files on the currently mounted 3741 diskette. In addition to the names of the files, the numbers under the headings 'BOE', 'EOE', and 'EOD' indicate the sector addresses corresponding to the beginning of extent (the first sector in the file), the end of extent (the last sector reserved for the file), and the end of data (the next unused sector within the file); numbers in parentheses under each heading indicate the respective 3741 track and the sector position within the track. Any blank lines within the list correspond to deleted entries in the 3741 catalog. Note: The numbers given without parentheses are appropriate for use with the software system when dumping sectors in a particular file (see Figure 2-2). Required information: none.

```
NAME                'BOE'          'EOE'          'EOD'
SAMPLE           26 (01/01)     113 (04/10)     35 (01/10)
FILE010A        114 (04/11)     243 (09/10)    237 (09/04)
FILE030A        244 (09/11)    1056 (40/17)   1023 (39/10)
################ ##### (##/##) ##### (##/##) ##### (##/##)

(Note: The print format, shown in the last line, does not
 appear in an actual display.)
```

Figure 2-2. A Sample 3740 Catalog Listing

DUMP 3741 SECTOR(S)--displays a specified set of 3741 sectors with no attempt to format the data; nonprintable characters appear as question marks (?). Three sectors at a time are displayed; then, the system waits until the operator keys RETURN(EXEC) before displaying three more sectors. Required information: any pair of numbers between 1 and 1950 (maximum), where a suitable range of sector addresses for a particular file may be obtained from the "list 3741 catalog" display.

APPLICATION/SUBROUTINES--provides access to a sample application program if the file name 3741090A is the operator's response to the system's request for the name of the application program; then, via a new menu (see Figure 3-1) and prompts, the sample program demonstrates the file maintenance capabilities of the utility subroutines which simulate several Wang disk operations while compensating for the differences between Wang and 3740 diskettes. Note: See Chapter 3 for a description of each subroutine, and the requirements for integrating the subroutines with user-written application programs. Required information: The name of an application program stored on the platter with the 3740 software.

CHANGE DEFAULT ADDRESSES--allows the user to change the software's preset default addresses. If three disk drives are available, the program loading address and the Wang files mounting address should be different to eliminate the necessity of removing the software system platter each time a Wang platter is to be mounted. Required information: Any new addresses to replace the current default values.

RETURN TO 'START'--returns the system menu to the CRT if S. F. '31 is depressed after accessing one of the system programs.

APPENDIX B

RIBBON CABLE CONVERSION, R1 to R2

The system is shipped with one ribbon cable; however, two cables will be necessary when processing two 3740 diskettes. If this is the case, an additional cable should be ordered, WLI# 220-3011-R2. In the event that a cable is required immediately, and the site has an R1 cable, then it may be modified to function as an R2 until the ordered cable arrives. The modification is accomplished as follows (refer to figure on following page):

1. Isolate pin 12 on the 6766 connector by cutting the etch as shown in the figure.

2. Solder one end of a 32 inch length of wire to pin 12 and route the wire through the hole in the 6766 board and parallel to the ribbon cable to pin 16 of the 6767 connector.

3. Tape the wire neatly along the ribbon cable to avoid transient noise pick-up or snagging of the wire.

4. Trim the wire to the exact length and solder to pin 16, as shown in the figure.

5. Replace the modified cable with the new cable when it arrives.

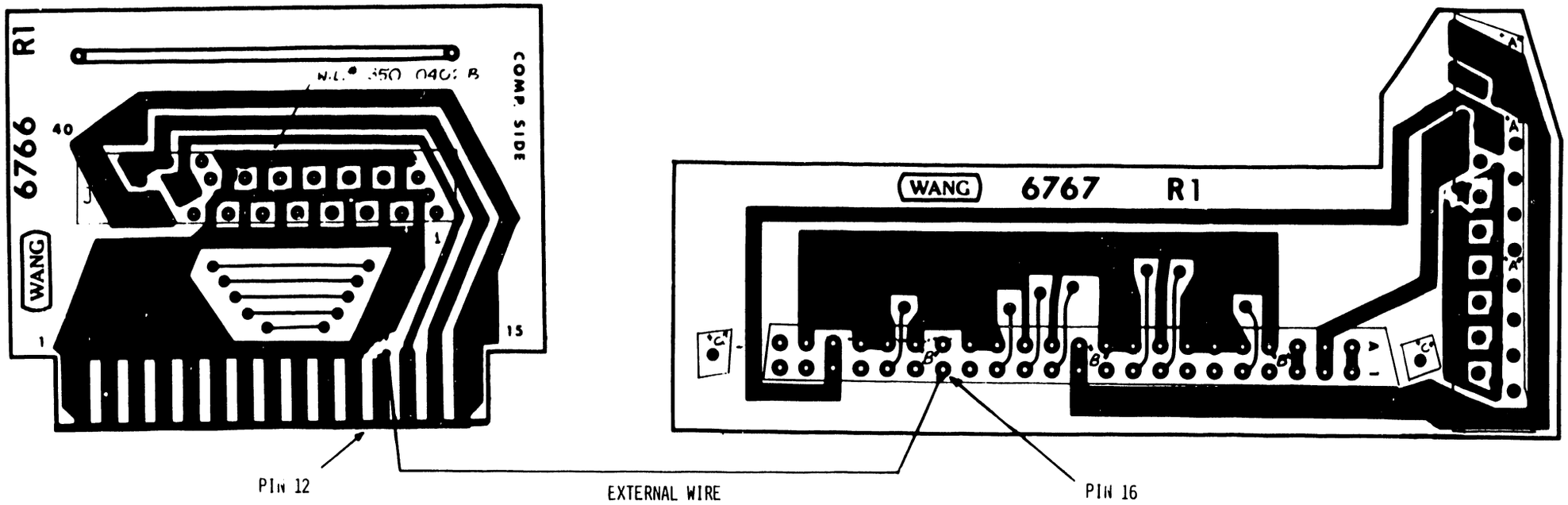

BREAK ETCH TO ISOLATE PIN 12 AND CONNECT PIN 12 TO PIN 16 USING AN EXTERNAL WIRE RUN BETWEEN CONNECTORS.

EMERGENCY CONVERSION OF RIBBON CABLE FROM R1 TO R2

APPENDIX C

SHUGART LOGIC DIAGRAMS

The diagrams in this section are listed in the following order:

50501-0	Logic Manual Index
50502-0	Functional Diagram
50503-0	Read/Write/Inop Ckts.
50504-0	Stepper Control
50505-0	Detectors
50506-0	Motors/Soloniod/Switch
50507-0	Interface Inputs
50508-0	Interface Outputs
25000-0	Schematic Diagram, Diskette
6472-61	I/O CABLE ASSY.
7218	IBM 3741 SHUGART BOARD

50501-0

LOGIC MANUAL DRIVE SN _____

INDEX

AA001	INDEX
AB010	FUNCTIONAL DIAGRAM
DA010	READ/WRITE/INOP CKTRY
DA020	STEPPER CONTROL
DA030	DETECTORS
DA040	MOTORS/SOLENOID/SWITCH
VA010	INTERFACE INPUT (J1, J4, AND J5)
VA020	INTERFACE OUTPUT (J1)

TABLE I
OPTIONAL FEATURES

PCB ASM NO.	OPTIONAL FEATURES			
	-5V	-12V TO -15V	DATA SEP	SECTOR SEP
25002	X			
25003		X		
25004	X		X	
25005		X	X	
25006	X		X	X
25007		X	X	X

WRITE PROTECT CAN BE ORDERED WITH ANY OF THE ABOVE.

TABLE III
CUSTOMER CUT TRACE OPTIONS AND HISTORY CHART

JUMPER AND TRACE CUT CAPABILITY			
DESIGNATOR	DESCRIPTION	OPEN	SHORT
A	DRIVE SELECT 1 OR HEAD LOAD		[1]
B	ALTERNATE DRIVE SELECT PATH	[1]	
C	RADIAL HEAD LOAD		[1]
D	DRIVE SELECT TERMINATION WITH RADIAL HEAD LOAD	[1]	
E	MULTIPLEX OR DRIVE SELECT FEATURE	[1]	
F	TERMINATION FOR "WRITE DATA"		[1]
G	TERMINATION FOR "FILE INOP RESET"		[1]
H	TERMINATION FOR "WRITE GATE"		[1]
J	TERMINATION FOR "DIRECTION SELECT"		[1]
K	TERMINATION FOR "STEP"		[1]
M	RADIAL/READY INTERRUPT		[1]
R	STEP WITH HEAD UNLOADED		[1]
S	R.P.S. (RADIAL SECTOR AND INDEX)		[1]

FACTORY CUT TRACE OPTIONS AND HISTORY CHART

L	-5 OR -12 TO -15V	SEE TABLE II
N	INDEX ONLY (900)	SEE TABLE II
P	INDEX AND SECTOR (901)	SEE TABLE II

[1] AS SHIPPED FROM FACTORY

TABLE II
FACTORY CUT TRACE OPTIONS

PCB ASM NO.	TRACE "L"	TRACE "N"	TRACE "P"
25002	SHORTED	OPEN	SHORTED
25003	OPEN	↑	↑
25004	SHORTED	↓	↓
25005	OPEN	OPEN	SHORTED
25006	SHORTED	SHORTED	OPEN
25007	OPEN	SHORTED	OPEN

MUST CONFORM TO ENGINEERING SPEC ES 30000-0

MATERIAL

TOLERANCE UNLESS OTHERWISE NOTED

LINEAR ± XX ± XXX

ANGULAR ±

CASE DEPTH

HARDNESS

SURFACE TREATMENT ES

CORNERS BREAKS OUTSIDE MAX INSIDE MAX

EC HISTORY

DATE	NO
3-16-4	0114
4-23-4	0274

TITLE LOGIC MANUAL INDEX

DETAIL Jude 3/74

DESIGN

APPROV

RELEASED FOR ASSEMBLY 50500

SHEET 1 OF 1

C SCALE — LG 50[illegible]-0 0274

AA0[illegible]

50502-0

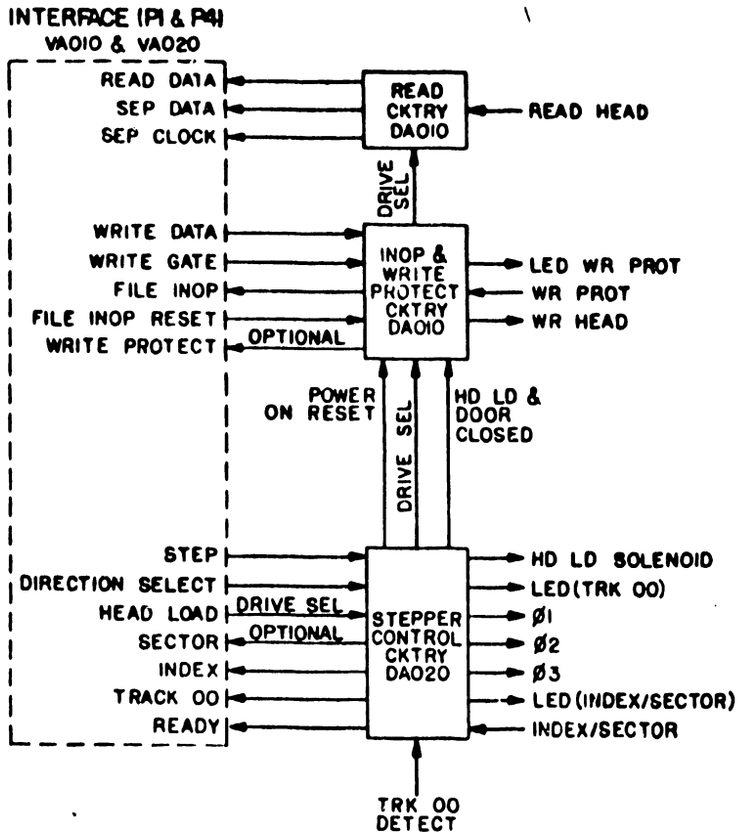

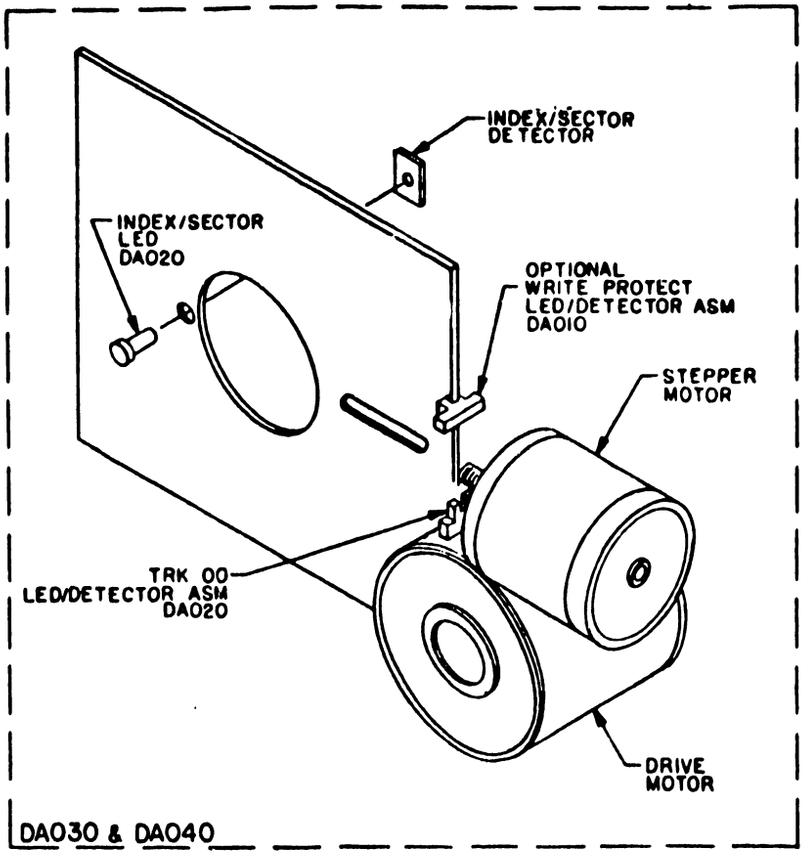

MUST CONFORM TO ENGINEERING SPEC. ES 30000-0		EC HISTORY		SHUGART ASSOCIATES	
MATERIAL	TOLERANCE UNLESS OTHERWISE NOTED	DATE	NO	TITLE LOGIC DIAGRAM FUNCTIONAL DIAGRAM	
		3-16-4	0114		
CASE DEPTH	LINEAR ± XX ± XXX			DETAIL Jude 3/74	RELEASED FOR ASSEMBLY
HARDNESS	ANGULAR ±			DESIGN	50500
SURFACE TREATMENT ES	CORNERS ... OUTSIDE MAX INSIDE MAX			APPRO	SHEET 1 OF 1
				C SCALE —	LG 50502-0 0114

AB010

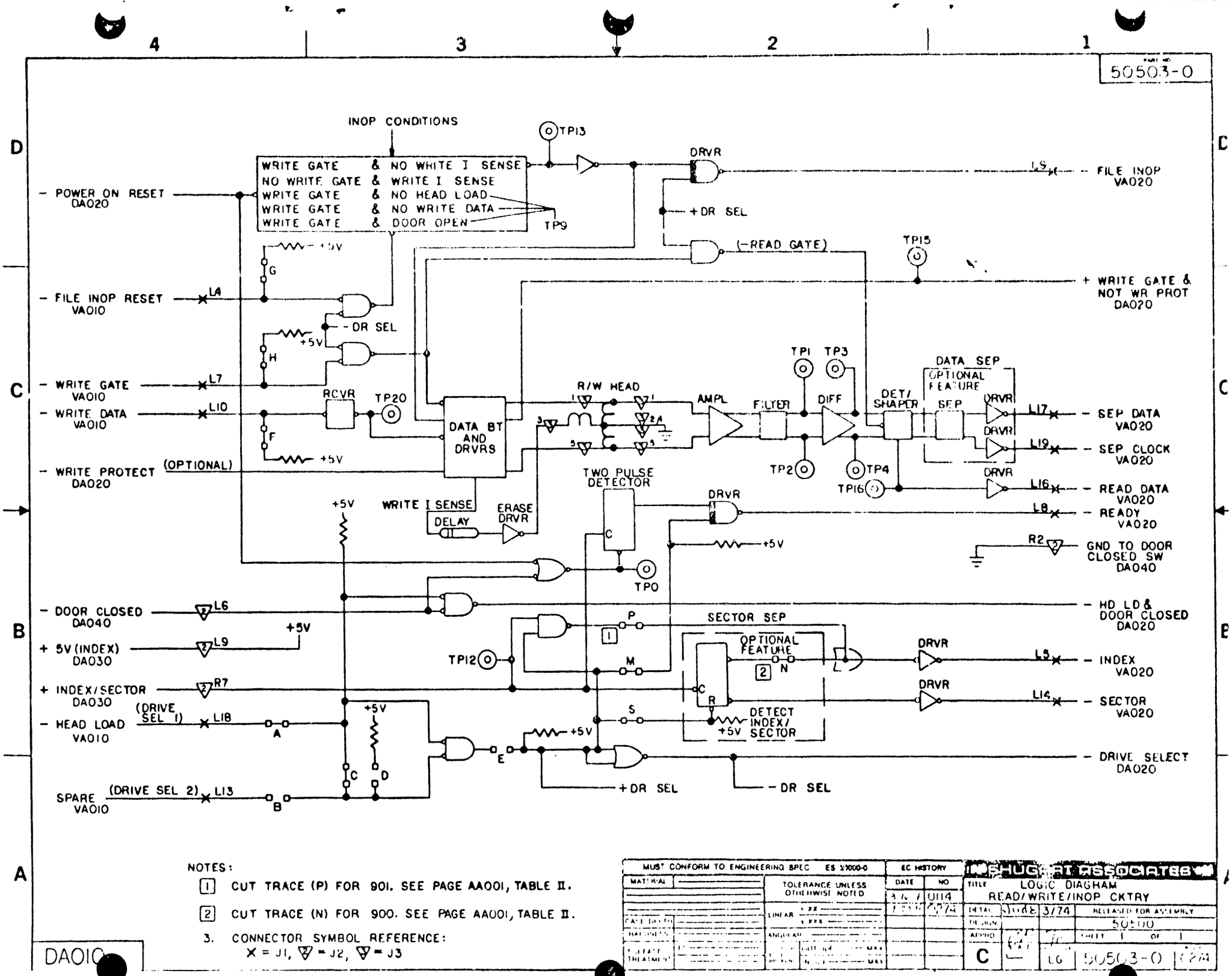
50503-0
INOP CONDITIONS
WRITE GATE & NO WRITE I SENSE
NO WRITE GATE & WRITE I SENSE
WRITE GATE & NO HEAD LOAD
WRITE GATE & NO WRITE DATA
WRITE GATE & DOOR OPEN
TP9
TP13
DRVR
+DR SEL
(-READ GATE)
TP15
FILE INOP VA020
+ WRITE GATE & NOT WR PROT DA020
- POWER ON RESET DA020
- FILE INOP RESET VA010
- DR SEL
- WRITE GATE VA010
- WRITE DATA VA010
- WRITE PROTECT DA020
(OPTIONAL)
RCVR
TP20
DATA BT AND DRVRS
R/W HEAD
AMPL
FILTER
DIFF
DET/ SHAPER
DATA SEP
OPTIONAL FEATURE
SEP
TP1
TP3
TP2
TP4
TP16
- SEP DATA VA020
- SEP CLOCK VA020
- READ DATA VA020
- READY VA020
GND TO DOOR CLOSED SW DA040
TWO PULSE DETECTOR
WRITE I SENSE
DELAY
ERASE DRVR
TP0
- DOOR CLOSED DA040
+ 5V (INDEX) DA030
+ INDEX/SECTOR DA030
- HEAD LOAD VA010
(DRIVE SEL 1)
SPARE VA010
(DRIVE SEL 2)
- HD LD & DOOR CLOSED DA020
SECTOR SEP
OPTIONAL FEATURE
DETECT INDEX/ SECTOR
TP12
- INDEX VA020
- SECTOR VA020
- DRIVE SELECT DA020
+DR SEL
- DR SEL
+5V
NOTES:
1 CUT TRACE (P) FOR 901. SEE PAGE AA001, TABLE II.
2 CUT TRACE (N) FOR 900. SEE PAGE AA001, TABLE II.
3. CONNECTOR SYMBOL REFERENCE:
X = J1, = J2, = J3
DA010
MUST CONFORM TO ENGINEERING SPEC ES 33000-0
EC HISTORY
TOLERANCE UNLESS OTHERWISE NOTED
SHUGART ASSOCIATES
TITLE LOGIC DIAGRAM READ/WRITE/INOP CKTRY
3/74
RELEASED FOR ASSEMBLY
50500
SHEET 1 OF 1
C
50503-0

50504-0

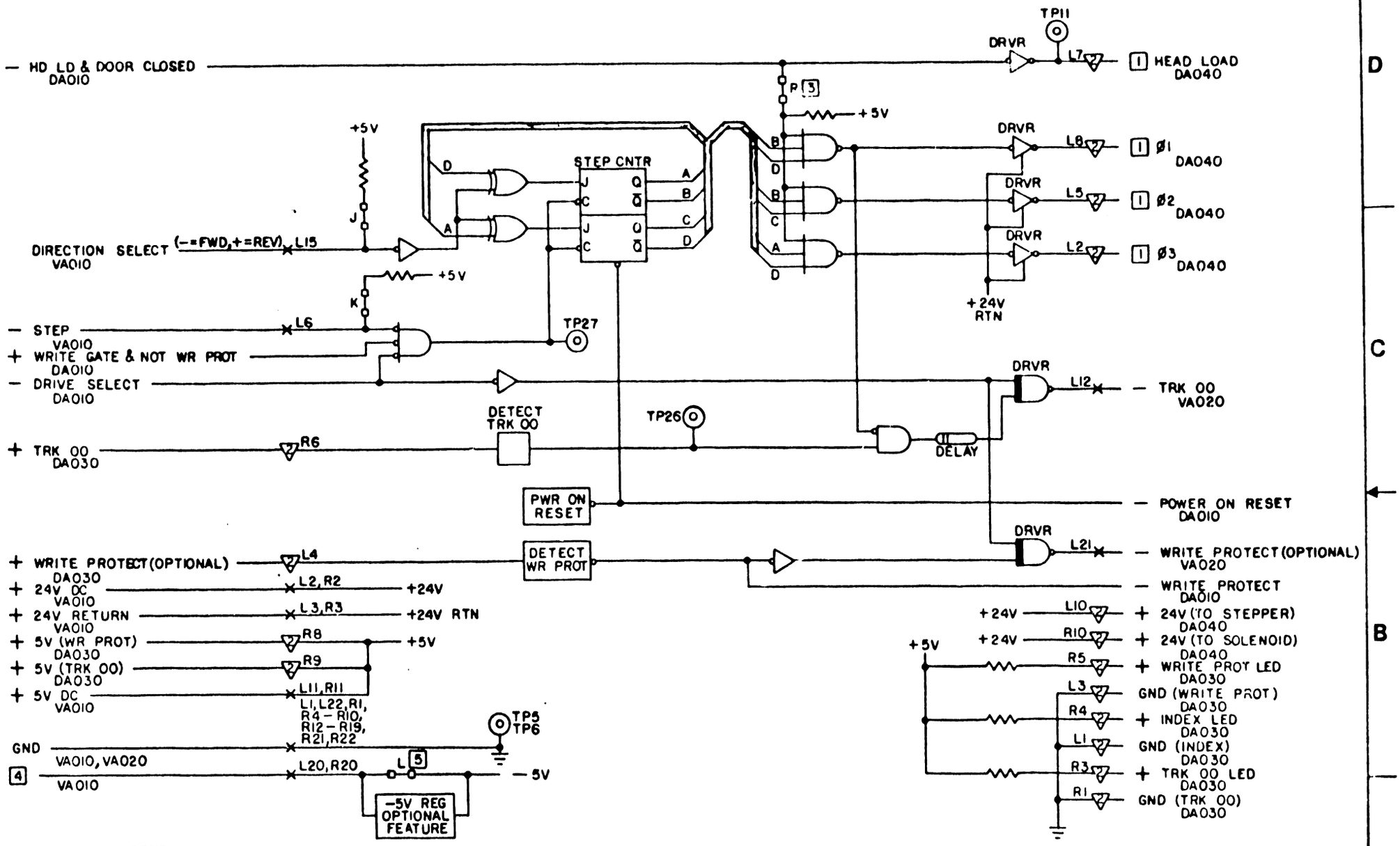

NOTES:

1. GND WHEN ACTIVE & + 24VDC WHEN INACTIVE.
2. CONNECTOR SYMBOL REFERENCE: X = J1, ▽ = J2
3. CUT TRACE (R) TO ALLOW STEPPING WITH HEAD NOT LOADED OR DOOR OPEN.
4. −5V OR −12V TO −15V SELECTABLE FEATURE. SEE PAGE AA001 TABLE II
5. CUT TRACE (L) FOR −12V TO −15V INPUT AT L20, R20. SEE PAGE AA001, TABLE II.

DA020

MUST CONFORM TO ENGINEERING SPEC. ES 30000-0		EC HISTORY		SHUGART ASSOCIATES	
MATERIAL	TOLERANCE UNLESS OTHERWISE NOTED	DATE	NO	TITLE LOGIC DIAGRAM STEPPER CONTROL	
		3-16-4	0114	DETAIL	3/74 RELEASED FOR ASSEMBLY
CASE DEPTH	LINEAR ± XX ± XXX			DESIGN	50500
HARDNESS	ANGULAR			APPRO	SHEET 1 OF 1
SURFACE TREATMENT	OUTSIDE MAX / INSIDE MAX			C	SCALE / FAX CODE LG / PART NO 50504-0 / REV EC 0114

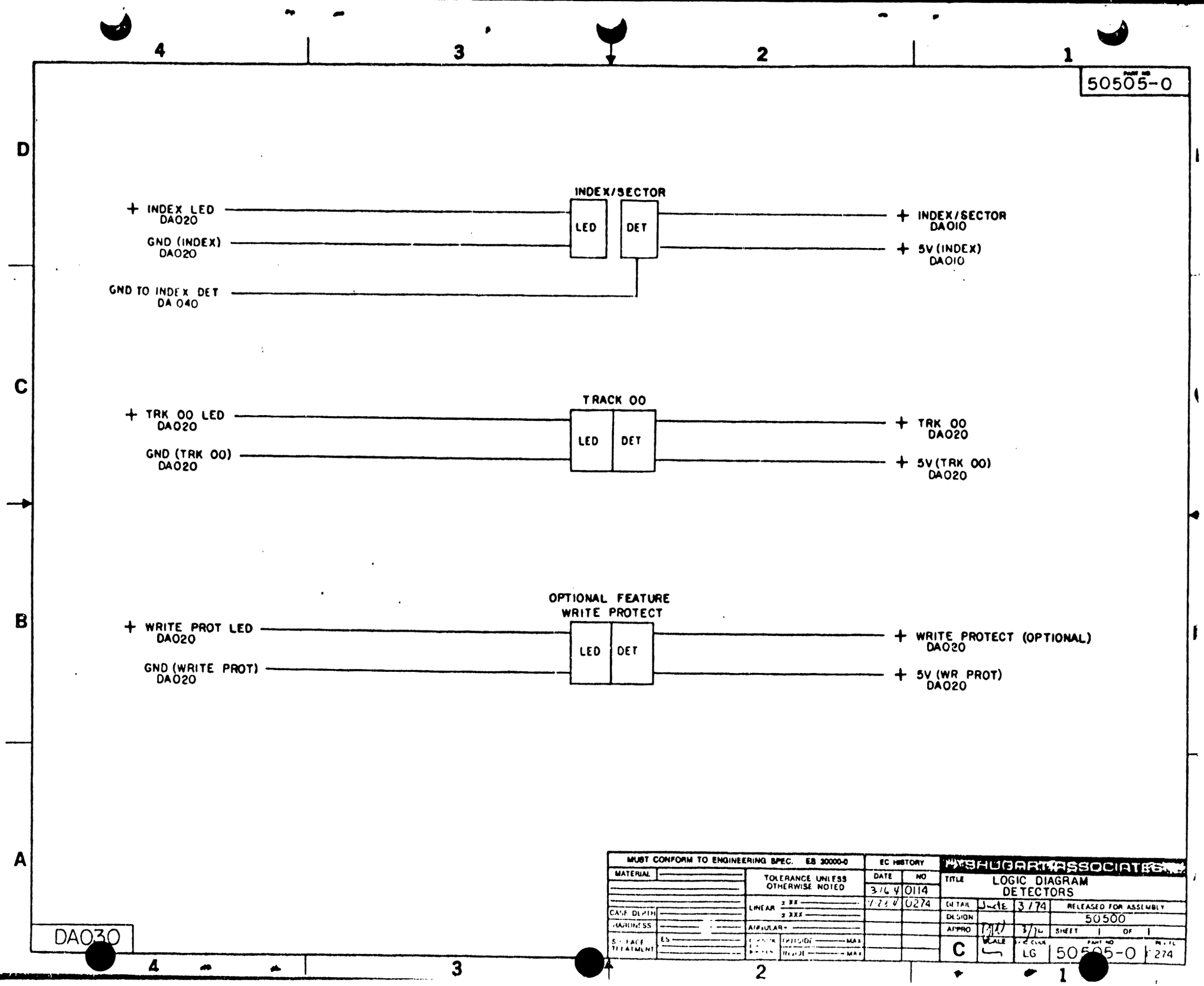
50505-0
INDEX/SECTOR
+ INDEX LED DA020
GND (INDEX) DA020
GND TO INDEX DET DA 040
LED
DET
+ INDEX/SECTOR DA010
+ 5V (INDEX) DA010
TRACK 00
+ TRK 00 LED DA020
GND (TRK 00) DA020
LED
DET
+ TRK 00 DA020
+ 5V (TRK 00) DA020
OPTIONAL FEATURE WRITE PROTECT
+ WRITE PROT LED DA020
GND (WRITE PROT) DA020
LED
DET
+ WRITE PROTECT (OPTIONAL) DA020
+ 5V (WR PROT) DA020
MUST CONFORM TO ENGINEERING SPEC. ES 30000-0
MATERIAL
TOLERANCE UNLESS OTHERWISE NOTED
LINEAR
ANGULAR
CASE DEPTH
HARDNESS
SURFACE TREATMENT
EC HISTORY
DATE
NO
3/6 4
0114
0274
SHUGART ASSOCIATES
TITLE
LOGIC DIAGRAM DETECTORS
DETAIL
DESIGN
APPRO
3/74
RELEASED FOR ASSEMBLY
50500
SHEET 1 OF 1
C
LG
50505-0
274
DA030

50506-0

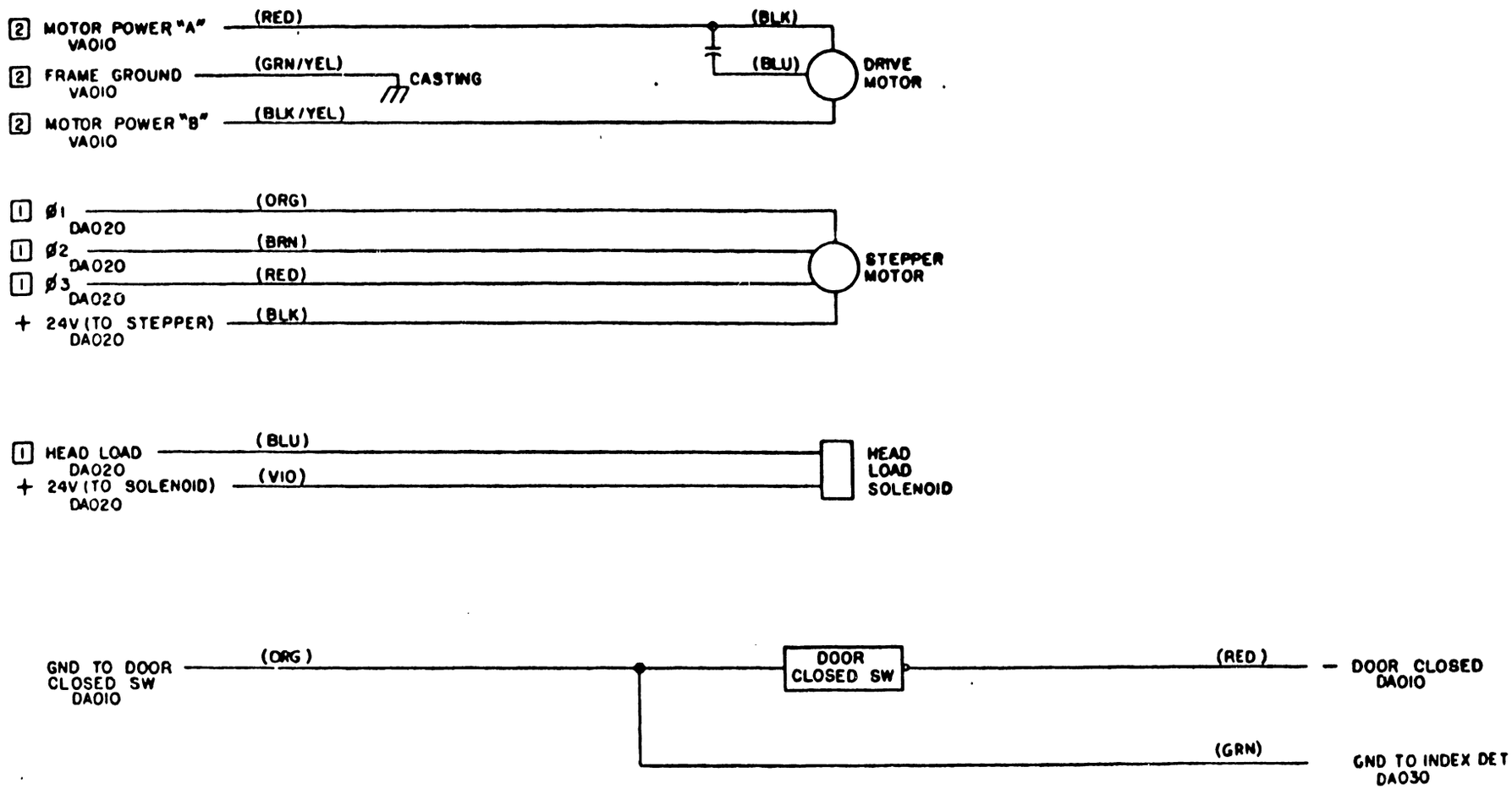

NOTES:

1. GND WHEN ACTIVE & +24V WHEN INACTIVE.
2. SEE PAGE VA010 (NOTE 1) FOR AC VOLTAGES.

MUST CONFORM TO ENGINEERING SPEC. ES 30000-0		EC HISTORY		SHUGART ASSOCIATES			
MATERIAL	TOLERANCE UNLESS OTHERWISE NOTED	DATE	NO.	TITLE LOGIC DIAGRAM MOTORS/SOLENOID/SWITCH			
		3-16-4	0114				
	LINEAR ± XX ± XXX	4-23-4	0274	DETAIL	3/74	RELEASED FOR ASSEMBLY	
CASE DEPTH				DESIGN		50500	
HARDNESS	ANGULAR			APPRO	3/74	SHEET 1 OF 1	
SURFACE TREATMENT	ES			C	SCALE	LG	50506-0

DA040

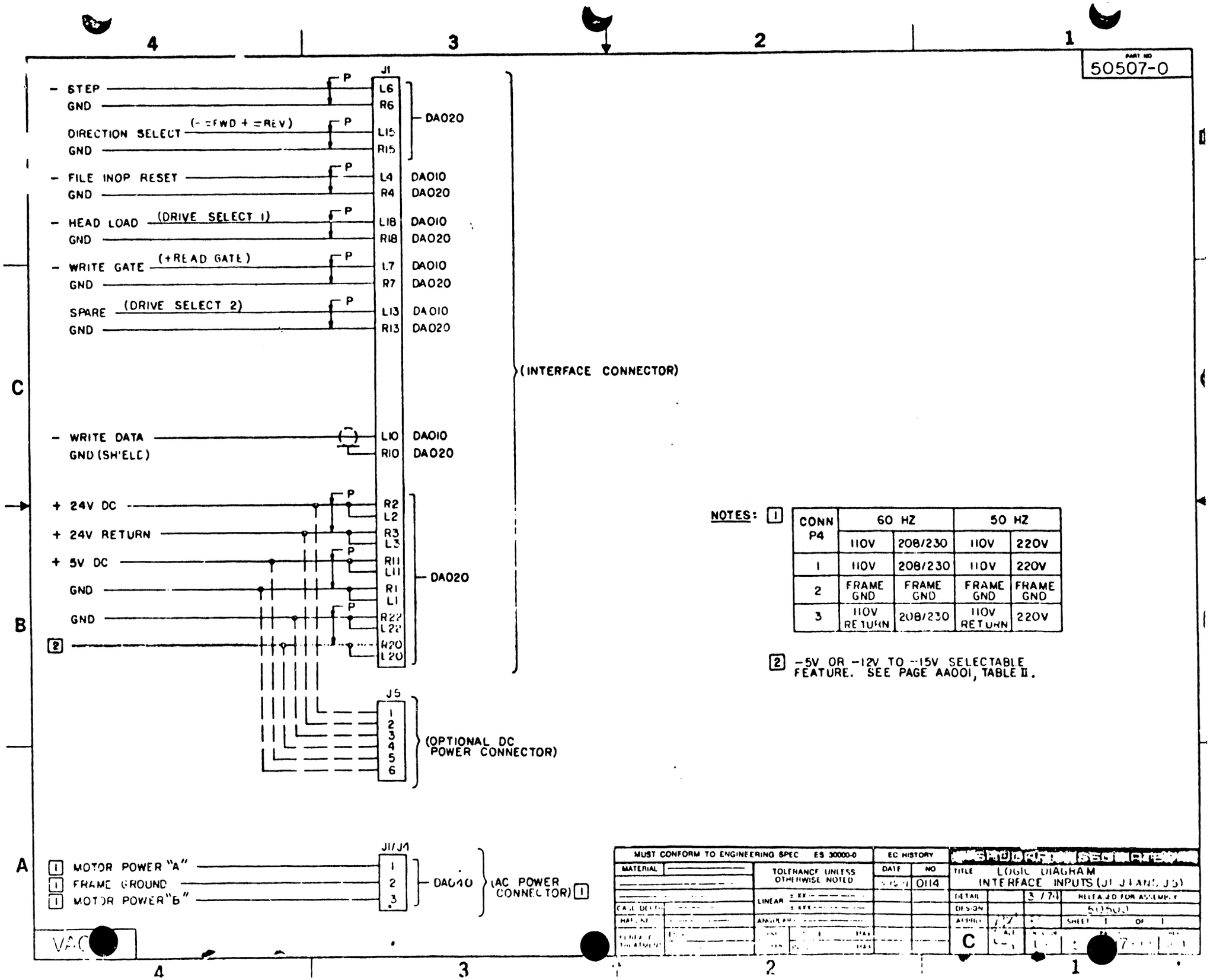

CONN P4	60 HZ		50 HZ	
	110V	208/230	110V	220V
1	110V	208/230	110V	220V
2	FRAME GND	FRAME GND	FRAME GND	FRAME GND
3	110V RETURN	208/230	110V RETURN	220V

50508-0

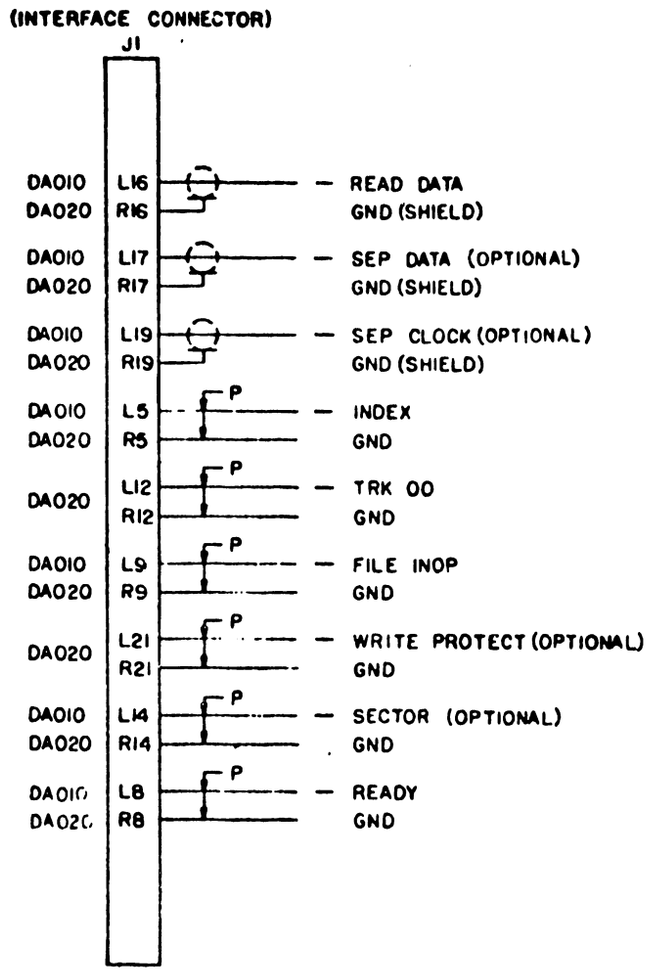

MUST CONFORM TO ENGINEERING SPEC ES 30000-0		EC HISTORY		SHUGART ASSOCIATES			
MATERIAL	TOLERANCE UNLESS OTHERWISE NOTED	DATE	NO	TITLE LOGIC DIAGRAM INTERFACE OUTPUTS (J1)			
			0114				
	LINEAR ± XX ± XXX		0274	DETAIL	3/74	RELEASED FOR ASSEMBLY	
CASE DEPTH				DESIGN		50500	
HARDNESS	ANGULAR			APPRO		SHEET 1 OF 1	
SURFACE TREATMENT	OUTSIDE MAX / INSIDE MAX			C	SCALE	LG	50508-0 / 0274

VA020

USED ON ASSEMBLY	PART # 25000-1
25002-1	
25003-1	
25004-1	
25005-1	
25006-1	
25007-1	

+ READ/WRITE (1) XS111
+ READ/WRITE (0) XS111
- READ GATE XS111
+ PULL UP XS111
+ DIRECTION SELECT
- STEP
- DRIVE SEL INT XS111
+ TRK 00
+ HD LOAD XS111

L16 — READ DATA
L17 — SEP DATA
L19 — SEP CLOCK
L8 — Φ1
L5 — Φ2
L2 — Φ3
L12 — TRK 00
— POWER ON RESET XS111

DATA SEPARATOR

USED ONLY ON ASM
25004
25006
25006
25007

+24V RTN

NOTES: UNLESS OTHERWISE SPECIFIED;

1. ALL RESISTORS ARE 1K, 1/4W, 5%.
2. ALL CAPACITORS ARE IN MICROFARADS, 100V, 10%.
3. ALL CHOKES ARE 100uH, 10%.
4. ALL DIODES ARE IN4148.
5. ALL TRANSISTORS ARE 2N2222A.
6. SYMBOL: IPU = TRACE CUT CAPABILITY.
7. SYMBOL: J D : JUMPER CAPABILITY.
8. CONNECTOR SYMBOL REFERENCES: (X) = J1 (▽) = J2 (▽) = J3 (▽) = J5

XS110

TYPE	POSITION	UNUSED ELEMENTS	+5V (PIN)	GND (PIN)
7400	1D, 4D, 2E	1D1	14	7
7402	1A, 3A	1A1	14	7
7404	3D, 3E	3E3, 3D2		
7406	4E	4E2		
7410	3B, 2C			
7438	2A, 1B	1B4	14	7
7414	1E, 3C		14	7
7476	2B		5	13
7486	2D		14	7
UA733	5F		—	—
AT20	5C		—	8
9602	1C, 4C		16	8
75452P	3F		8	4

REF DESIGNATION LAST USED	REF DESIGNATION NOT USED
C38	C21, 22, 23, 27
CR19	CR1
L9	
Q44	Q5, 6, 8, 28
R130	R5, 9-11, 39, 60, 63, 65-67, 89
TP86	TP10, 17, 18, 19, 22, 23, 28, 29, 30, 31, 32, 35, 36

MUST CONFORM TO ENGINEERING SPEC ES 10000-0		EC HISTORY		SHEET 1 OF 2
MATERIAL	TOLERANCE UNLESS OTHERWISE NOTED	DATE	NO	TITLE SCHEMATIC DIAG, DIC-FT
	LINEAR .XX ± .010	5-76	059	DETAR [illegible] 5-5-76 RELEASED FOR ASSEMBLY
CASE DEPTH	.XXX ± .005	8-75	059	DESIGN SEE ARCVF
HARDNESS	ANGULAR ± 1°	1-76	059	APPRO
SURFACE TREATMENT	EB	3-76	059	SCALE — SIZE D SC 25000-1 REV
	FINISHED EDGES OUTSIDE MAX	10 7-	059	
	FINISHED EDGES INSIDE MAX			

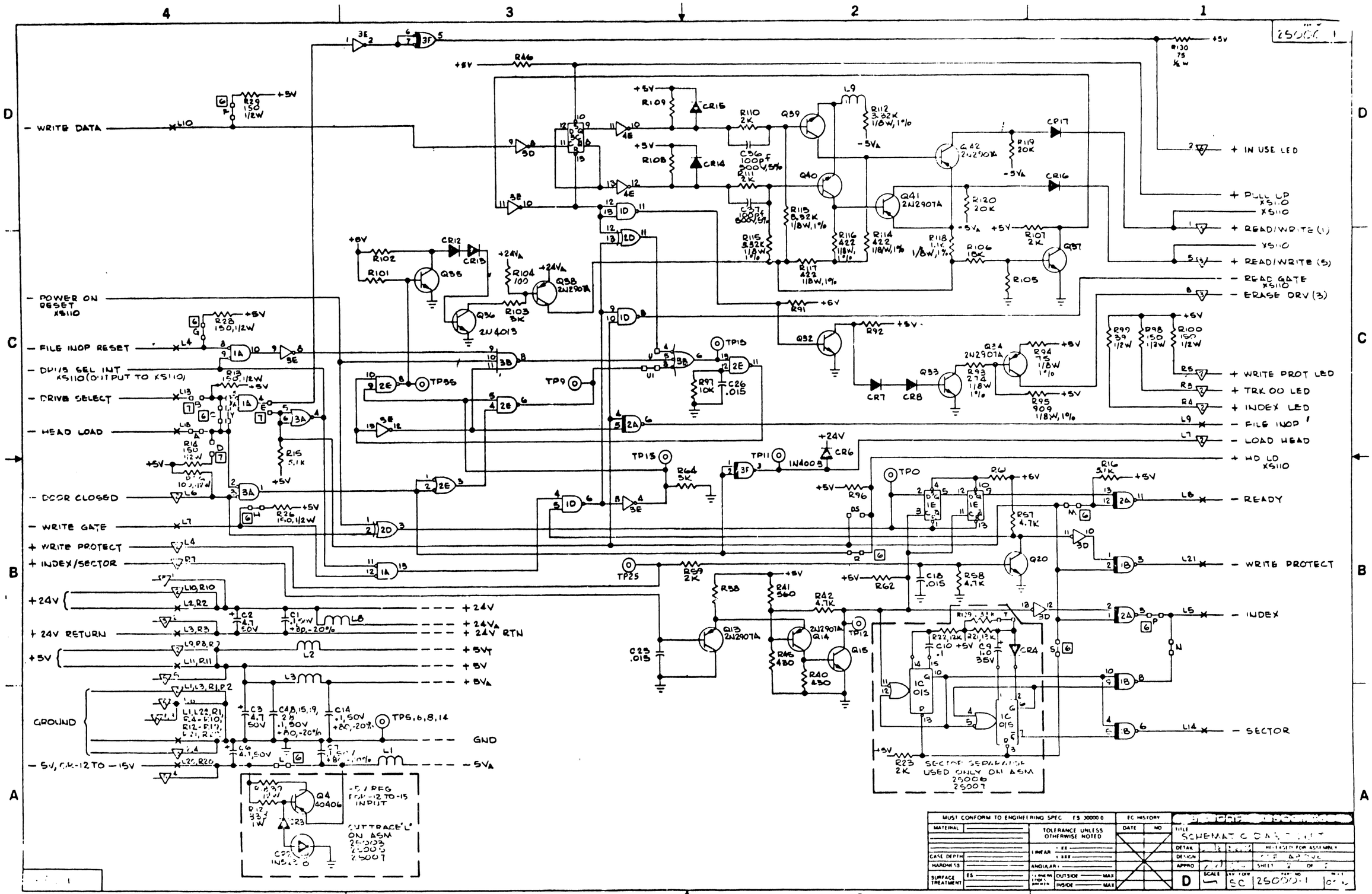

WRITE DATA
POWER ON RESET XS110
FILE INOP RESET
DRIVE SELECT
HEAD LOAD
DOOR CLOSED
WRITE GATE
WRITE PROTECT
INDEX/SECTOR
+24V
+24V RETURN
+5V
GROUND
-5V, OR -12 TO -15V
+24V
+24VA
+24V RTN
+5VT
+5V
+5VA
GND
-5VA
+ IN USE LED
+ PULL UP XS110
XS110
+ READ/WRITE (1)
XS110
+ READ/WRITE (5)
- READ GATE XS110
- ERASE DRV (3)
+ WRITE PROT LED
+ TRK 00 LED
+ INDEX LED
- FILE INOP
- LOAD HEAD
+ HD LD XS110
- READY
- WRITE PROTECT
- INDEX
- SECTOR
SECTOR SEPARATOR USED ONLY ON ASM 25006 25007
-5V REG FOR -12 TO -15 INPUT
CUT TRACE 'L' ON ASM 25003 25005 25007
MUST CONFORM TO ENGINEERING SPEC ES 30000.0
EC HISTORY
TOLERANCE UNLESS OTHERWISE NOTED
SCHEMATIC DIAGRAM
D
SC
25000-1

THIS DOCUMENT IS THE PROPERTY OF WANG LABORATORIES INC. AND SHALL NOT BE REPRODUCED OR COPIED OR USED AS A BASIS FOR THE MANUFACTURE OR SALE OF APPARATUS OR DEVICES WITHOUT PERMISSION

DO NOT SCALE

HOLE LEGEND

DRILLED OR PUNCHED HOLE TOLERANCES	HOLE DIA	TOL
	.0135 to .125	± .003
	.126 to .250	± .005
	.251 to .500	± .007

IDENT	DESCRIPTION	QTY
A		

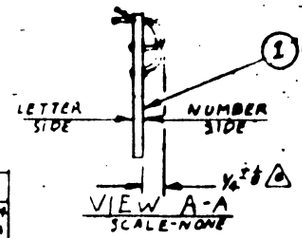

NOTES:

1) KEYSLOT BETWEEN 5 & 6 NEEDED ON 220-0066-3 ONLY.
2) ITEM # 5 LABEL USED ON 220-0066 & 220-0066-3 ONLY, ITEM # 7 LABEL USED ON 220-0066-2 ONLY
3) ADD JUMPERS BETWEEN POSITIONS 8,10,11 & 13 ON FINGER BOARD 5223C FOR 220-0066-1 ONLY.
4) SOLDER DRAIN WIRE TO ITEM 9
5) CUT WIRE #11 AT FINGER BOARD AND CUT BMR

6. WIRING RUN LIST

5223 FINGER BOARD	WIRE NO	220-0066 2230/2240/2242 640/740 350-2043	220-0066 630/730 640/140 350-2067	220-0066-2 2209 350-2067	220-0066-3 WCS 350-2067	220-0066-4 2210/2214A 350-2067
1	1	6	7	6	6	6
2	2	7	6	7	7	7
3	3	1	1	1	1	1
4	4	3	3	3	3	3
5	5	5	5	5	5	5
6	6	2	2	2	2	2
7	7	4	4	4	4	4
8	8	9	9	9	9	9
9	9	12	12	16	12	12
10	10	11	13	19	11	11
11	11	#	13	11	13 &	13 #
12	12	36	36	36	36	36
13	13	33	33	33	33	33
14	14	34	34	34	34	34
15	15	35	35	35	35	35
A	16	8	8	8	8	8
B	17	20	20	20	20	20
C	18	21	21	21	21	21
D	19	22	22	22	22	22
E	20	23	23	23	23	23
F	21	24	24	24	24	24
H	22	25	25	25	25	25
J	23	26	26	26	26	26
K	24	10	10	10	10	10
L	25	31	31	31	31	31
M	26	32	32	32	32	32
N	27	30	30	30	30	30
P	28	27	27	27	27	27
R	29	28	28	#	28	28
S	30	29	29	#	15	15

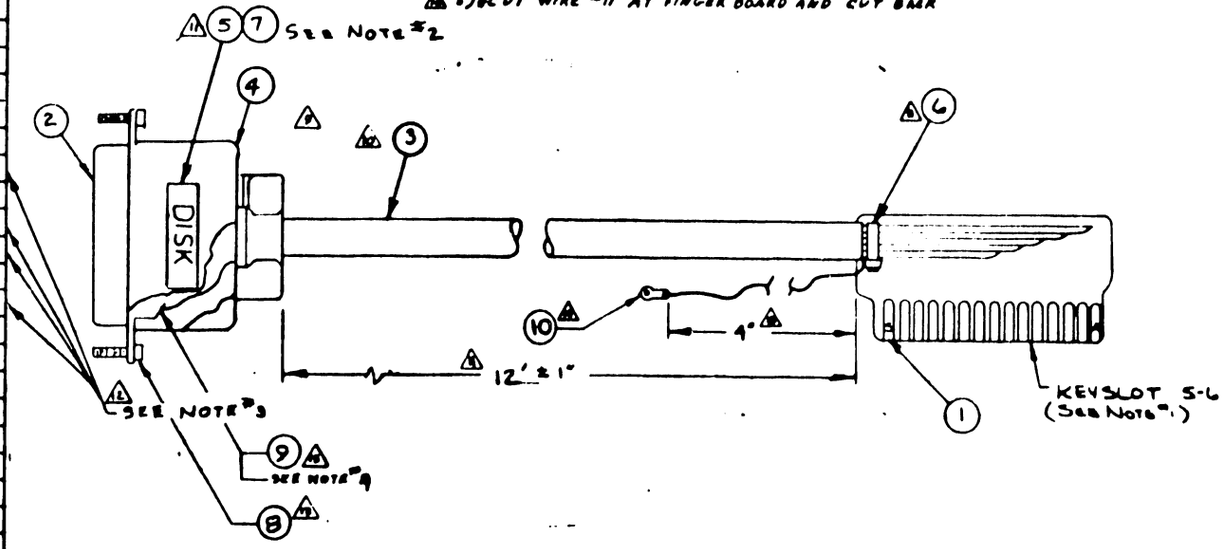

WANG PART NO	ITEM	QTY	NAME	MATERIAL	DESCRIPTION
654-1006	10	1	GROUND LUG		#6
168-0361	9	1	GROUND STRAP		C6815-28
350-4234	8	2	CAPTIVE SCREW		4-40 x 3/8
510-1262-50	7	REF	22P/D CONN LABEL		
605-1004	6	1	TY-WRAP		
510-1705	5	REF	30P CONN LABEL		
350-4228	4	1	30P STRAIN RELIEF COVER		3/8 POS.
420-0055	3	AR	CABLE 30 COND TOP		#26 GA SHIELDED
350-2052	2	1	30 POS. PLUG ASSY.		SCREW 4-40
510-5223C	1	1	30 PIN FINGER BOARD		

REVISION	BY	DATE	APPROVED BY	DATE
4 REVISED ARE DRAWN PER RFA#0744 3-5-74				
5 REVISED PER RFA #0847 APPD 5-29-74				
6 REVISED PER RFA-0959 JKB 8-26-74				
7 REV PER ECN#4195 6-10-74				
8 REV PER ECN#4937 4-28-75				
9 REV PER ECN#4937 MRM 8-1-75				
10 REV PER ECN# 5091 AAB 9/25/75				
11 REV PER ECN 5754 BJT 9/12/76				
12 REV PER ECN 5754 BJT 9/12/76				
13 REV PER ECN# 6397 PJS 4/27/77				
14 REV PER ECN# 6397 APPD DC 10/21/77				

WANG PART NO	FIRST USED ON	ASSY USED ON
1	14 U/1	

WANG LABORATORIES, INC. TEWKSBURY, MASS. U.S.A.

MATERIAL //

FINISH //

MODEL NO DISKS

SEE ENGR SPECIFICATIONS No. 1

TOL EX AS NOTED .XX ± .010 .XXX ± .005 ANG ± 30' FINISH

SCALE 1" SHT 1 OF 1

DRWN	DATE	ENGR
CHK		ENGR
I.C. CONTROL		MFG ENGR

TITLE I.O CABLE ASSY (NAL 2236 - 65 (6-CONN-6))

SEE CHART	C	6472-61	J
WANG PART NO. USED	SIZE	DRAWING NUMBER	REV

6472-61 C

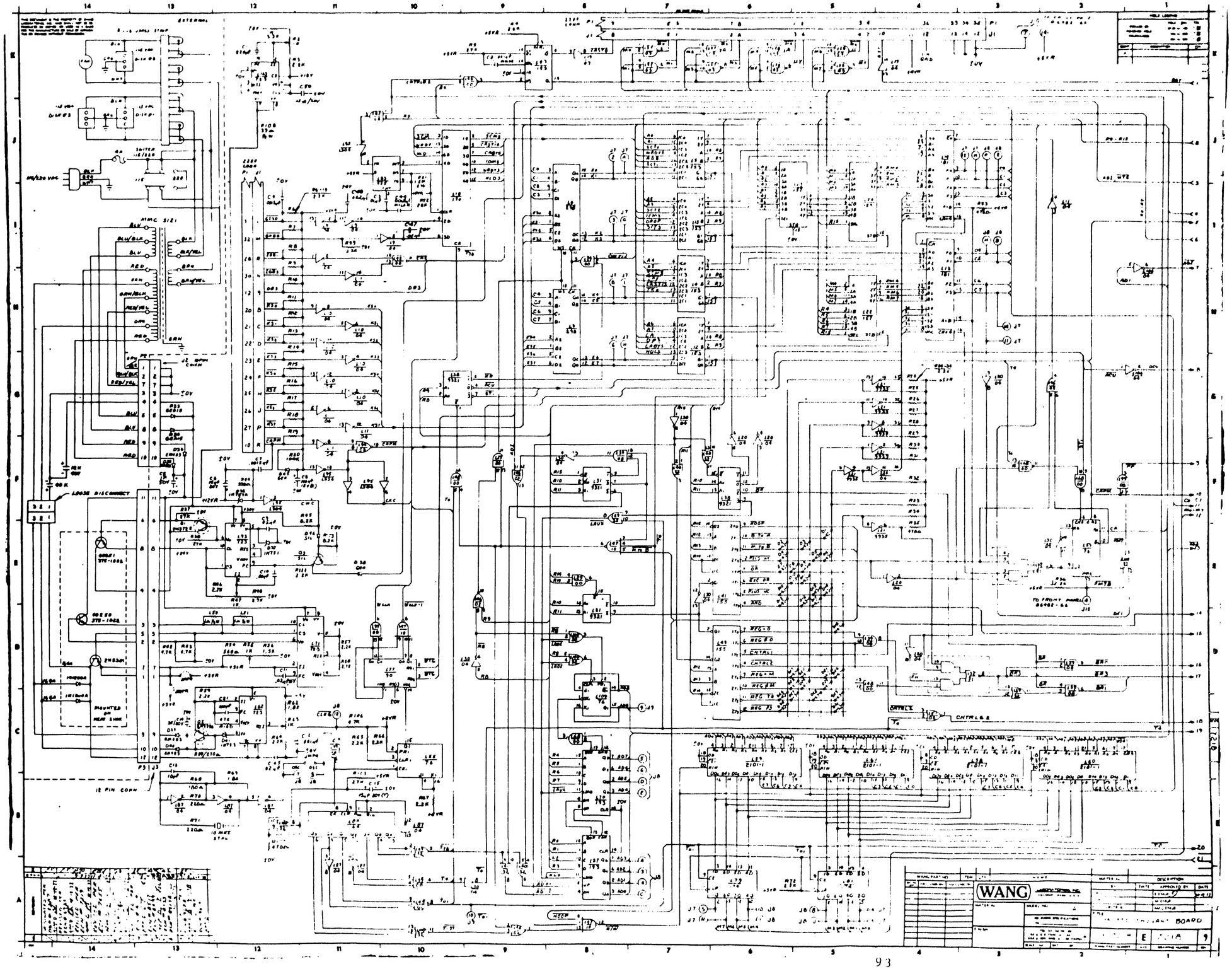

WANG

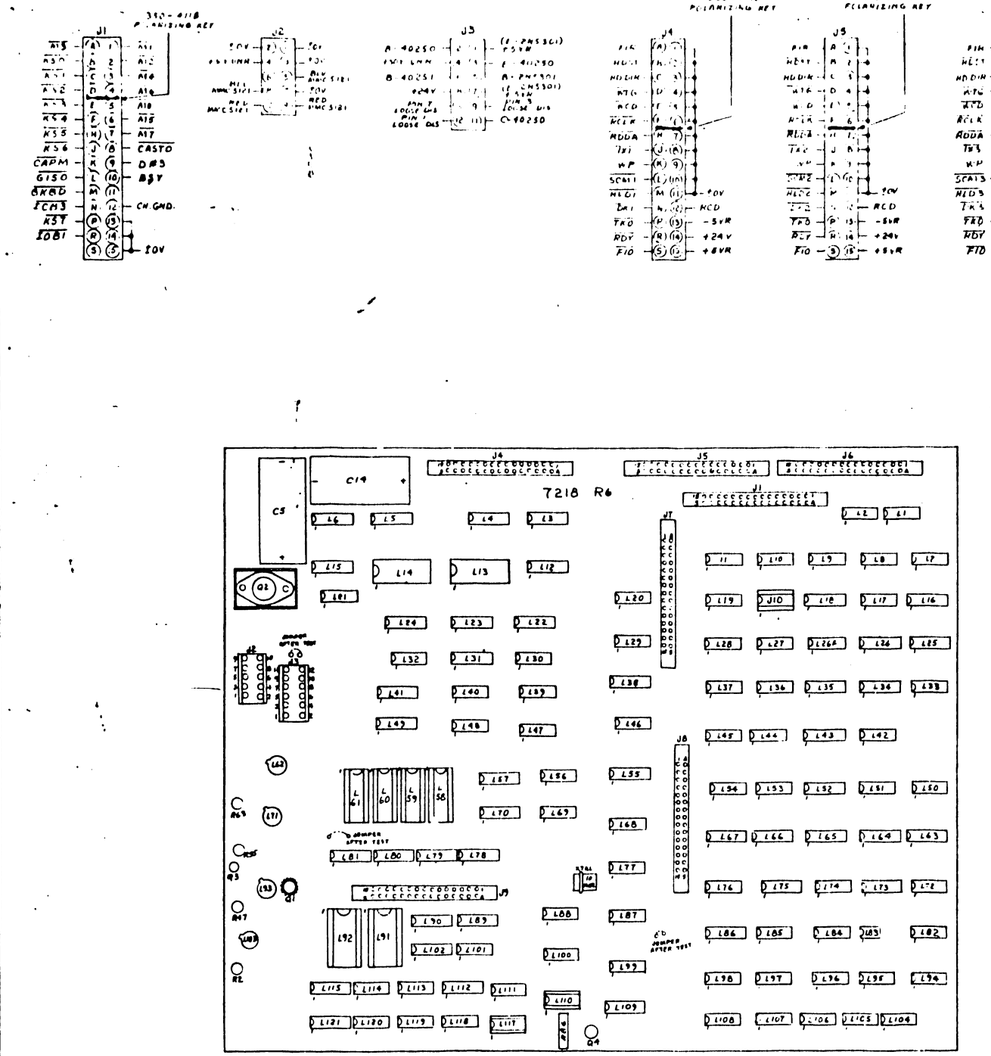

LOCATION	P.C. PART NO.	+5V	+5VR
A 39 - 1	376-0015	11	4
L9,11,21,24,27,47,48,96,116	376-0010	7	14
L5,28,67,76	376-0013A	8	16
L43,106,115	376-0048	8	16
L17,33	376-0011	10	5
L45,104	376-0099	12	24
L16,42,52,57,62	376-0082	8	16
L18,65,78,79,81	376-0098	8	16
L19	376-0056	7	14
L20	376-0023	7	14
L27,68	376-0028	7	14
L29,45 AP SC, CP, 96	376-0002	7	14
L31,58	376-0096	8	16
-32	376-0012	7	14
L34,43,63	376-0080	8	16
L36,85	376-0194	7	14
L37,97,104,108,113,114	376-0006	7	14
L39,56,61,99,107,118	376-0081	7	14
L26A,40,69,74,98,106,105	376-0093	7	14
L41,49	376-0049	8	16
L46,51,60A,111	376-0016	7	14
L47,85	376-0003	7	14
L53	376-0031	7	14
L54	376-0125	7	14
L55,73,--	376-0007	13	5
L37,75,96	376-0053	8	16
L38,59,60,61	377-0368	8	24
L62,71,93,103	376-0066	—	—
L64	376-0119	8	16
L75	376-0097	8	16
L77	376-0073	10	5
L76,88	376-0102	7	14
L83	376-0126	1	8
L83,90,102,115,121	376-0094	8	16
L91,92	SEE CHART	12	24
L100	376-0250	7	14
L110	SEE CHART	7	14
L112	376-0097	8	16
L117	SEE CHART	7	14
L2	376-0139	7	14
L95	376-0180	7	14
L116 NOT USED			

LOCATION	TYPE	SPARES
L19	7407	1
L26A	7432	1
L29	7400	1
L36	7411	1
L98	7400	1
L56	7408	2
L63	7423	1
L72	7404	3
L74	7432	1
L82	7408	1
L95	74S194	1
L96	7400	1
L107	7408	1
L109	7476	1

COMPONENT	P.C. PART NO.
A 39 - 1	330-5022
A 39 - 2	330-1614
R1,2,3,4,5,6,7,8,9,10,11,12,13,14,15,16,17,18,19,20,21,22,23,24,25,26,27,28,29,30,31,32,33,34,35,36,37,38,39,40,41,42,43,44,45,46,47,48,49,50,51,52,53,54,55,56,57,58,59,60,61,62,63,64,65,66,67,68,69,70,71,72,73,74,75,76,77,78,79,80,81,82,83,84,85,86,87,88,89,90,91,92,93,94,95,96,97,98,99,100,101,102,103,104,105,106,107,108,109,110,111	330-5022
R5,37,38,105	330-4C27
R7	330-5F15
R8	330-6C16
R11,107	330-2C47
R12,39	330-2247
R14	330-4247
R17,80	330-2568
R44	330-2533
R45	330-3918
R47,48,50	330-3127
R49	330-6C16
R51,52,53,54,56	330-3047
R55	330-2656
R57	330-5F15
R58	330-3918
R59	330-2718
R60	330-2332
R62	330-2656
R63,91	330-5F15
R64	330-1229
C1	300-1220
C 49	300-2015
C1,10,16	300-1963
C4,7	300-1967
C5	300-3055
C6,15,47,48,50	300-4922
C8	300-3011
C9,22,42	300-1950
C11,45,97	300-1954
C12	300-1956
C13	300-1610
C14	300-1954
R104	330-4010
C17	300-1978
C18-20	300-4045
C21	300-1972
C44	300-2516
C44	321-0308
D1,2,4,5,6,46	350-1001
D3,7	350-3091
D11,14	350-3093
D35,36,39,40	350-4C1C
D37	350-2051
D38,45	350-0660
E4	380-2862
G1	375-1027
G2	375-1531
G3	375-1006
G4	375-1C61
J2	654-1172
J3	654-1168
J10 14 PIN CONNECT	376-9012
24 PIN CONNECT	376-9003
22 PIN CONNECT	376-9010
L4,7	377-0071
C48	300-1913
R41,43,74	330-2016
RB2-B6	350-9028
L 117	376-9001

MODEL	L117	L110	L117	L91	L92
2270 A	7218 R A	376-0263	376-0264	376-2128	376-2129
2270 MVP	7218 R B	376-0263	376-0264	376-2138	376-2139

APPENDIX D

2270 TO 2270A CONVERSION

The 2270A-1, 2270A-2, and 2270A-3 are improved versions of the Model 2270 Shugart Floppy Disk Chassis. While the 2270 accommodates only Wang formatted diskettes, the 2270A can accommodate Wang diskettes and the IBM 3740 diskettes as well. However, before the IBM 3740 diskettes can be used in the 2270A, they must be formatted by IBM.

The older 2270 may be upgraded to the 2270A by a conversion kit. This kit (WLI #200-0270) contains the 210-7218 Microprocessor Board (IBM Format Compatible) and the ribbon cables for connecting this board to the Shugart Diskette Drives. These ribbon cables are R2 versions of the old cables used in the 2270; the R1 cables cannot be used with the IBM diskettes unless they are first modified (See appendix B).

The I/O cable assembly (WLI #220-0066-4) supplied with newly manufactured 2270A's is compatible with both the 2270 and the new 2270A. This I/O cable is not contained in the conversion kit.

The older 2270 I/O cable assembly (WLI #220-0066-3) may be upgraded for use with the 2270A by cutting and tying back pin 11 on the cable fingerboard. Pin 11 is +5V.

CAUTION:

Do not use the 2270 I/O cable with the 2270A unless it is first upgraded by disconnecting pin 11. Failure to regard this warning may result in damage to the I/O controller in the 2200 CPU.

APPENDIX E

ECN's, 7218 BOARD

The 7218 is currently at E-REV 3.

The two latest ECN's will be listed.

ECN #7655:

7218 P.C.

1. Add a .02 µf 25V +80-20% Ceramic Cap WLI #300-1904
   From: L18 pin 4
   To: Ground

2. Add a .002 µf 200V 20% Ceramic Cap WLI #300-1913
   From: L9 pin 12
   To: Ground

3. Cut the etch (or remove the jumper) leading from L18 pin 4 to L29 pin 1.

4. Add a jumper from L29 pin 1 to L18 pin 5.

REASON FOR CHANGE:
To eliminate intermittent errors 61 and 85.

This ECN increments the Electronic Revision Level to E-REV 2.

ECN #7821: 7218 P.C.

1. Add 10 KΩ 1/4 W 10% Resistor WLI #330-4010
   From: The junction of R88 and R101
   To: The junction of C16 and R89 (see figure)

2. Add a 2.2 KΩ 1/4 W 10% Resistor WLI #330-3022
   From: L117 pin 2
   To: L117 pin 1

3. Change R87
   From: 470Ω 1/4 W 10% Resistor WLI #330-2047
   To: 1 KΩ 1/4 W 10% Resistor WLI #330-3010

4. Change R88
   From: 1 KΩ 1/4 W 10% Resistor WLI #330-3010
   To: 680Ω 1/4 W 10% Resistor WLI #330-2068

5. Change R91
   From: 470Ω 1/4 W 10% Resistor WLI #330-2047
   To: 1 KΩ 1/4 W 10% Resistor WLI #330-3010

6. Change C16
   From: 1 µf 10V 20% Ceramic Cap WLI #300-1901
   To: .01 µf 25V +80-20% Ceramic Cap WLI #300-1903

7. Change C17
   From: 33 pf 5% 500V Mica Cap WLI #300-5016
   To: 20 pf 5% 500V Mica Cap WLI #300-5018

REASON FOR CHANGE:
To eliminate temporary drift of phase lock loop circuit.

This ECN increments the Electronic Revision Level to E-REV 3.

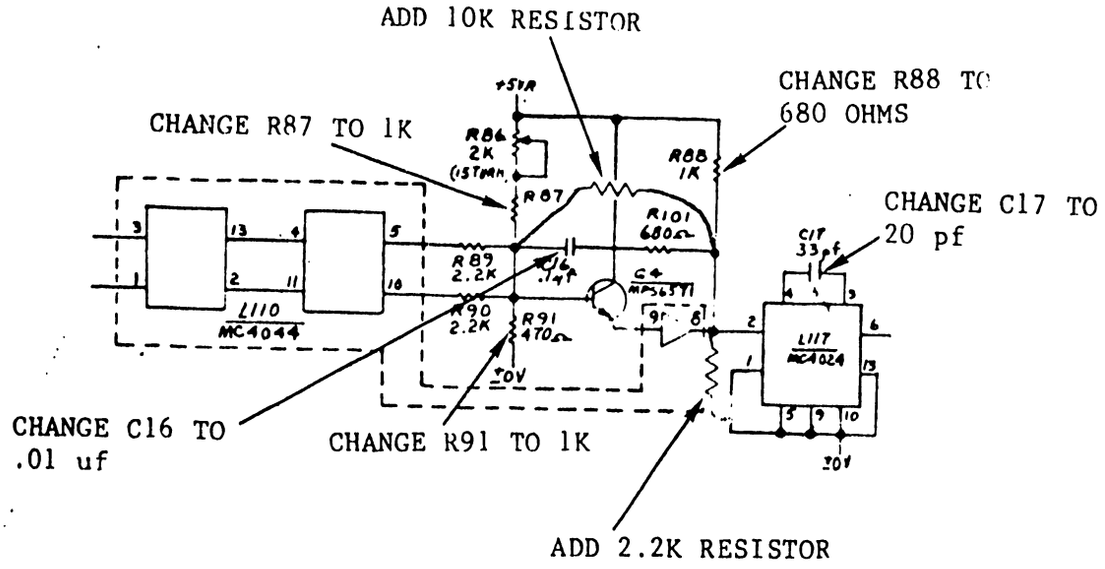
ADD 10K RESISTOR
CHANGE R88 TO 680 OHMS
CHANGE R87 TO 1K
CHANGE C17 TO 20 pf
CHANGE C16 TO .01 uf
CHANGE R91 TO 1K
ADD 2.2K RESISTOR
+5VR
R86 2K
R87
R88 1K
R89 2.2K
R90 2.2K
R91 470Ω
R101 680Ω
C16 .1μf
C17 33pf
L110 MC4044
L117 MC4024
-10V
-10V

WANG LABORATORIES, INC

ONE INDUSTRIAL AVENUE. LOWELL. MASSACHUSETTS 01851. TEL (617) 459-5000. TWX 710 343-6769. TELEX 94-7421

PRINTED IN U.S.A.

END