The information hereon is the property of PLESSEY PERIPHERAL SYS Transmittal receipt or possession of the information does not comply, license, or imply any rights to use, sell, or manufacture from this information and no reproduction or publication of it, in whole or in part, shall be made without written authorization from PLESSEY PERIPHERAL SYS

703340

REVISIONS				
ZONE	LTR	DESCRIPTION	DATE	APPROVED
	A	REL TO PROD EO 3156	7-18-79	
	B	INCORP EO3264	9-30-79	
	C	INCORP EO 3330 & 3330-1	11-9-79	
	D	INCORP EO 3496 ED	2-7-80	
	E	INCORP EO 3546	2-20-80	

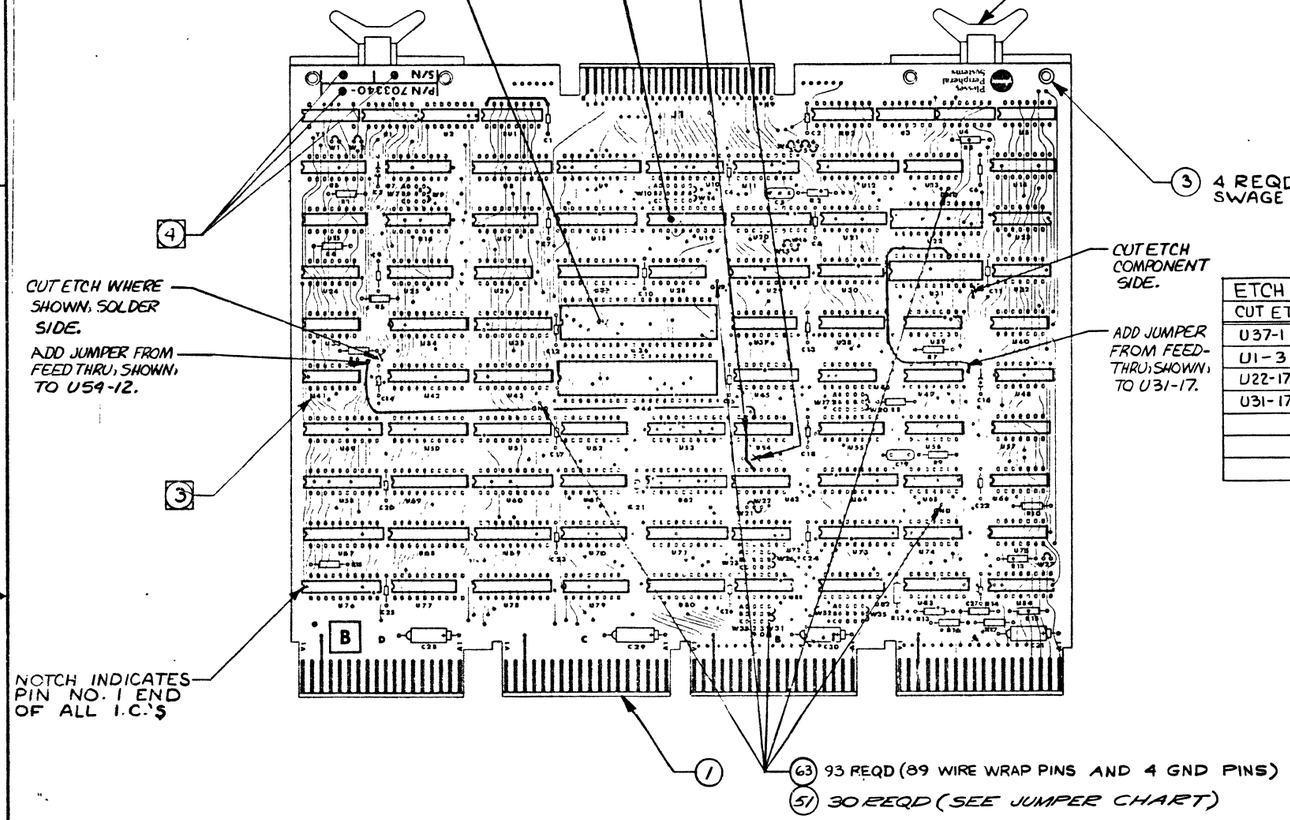

ETCH CUT TABLE	
CUT ETCH	BOARD SIDE
U37-1	COMPONENT SIDE
U1-3	COMPONENT SIDE
U22-17	SOLDER SIDE
U31-17	SOLDER SIDE

JUMPER TABLE	
FROM	TO
U22-17	U31-17
U28-1	U31-17
U28-2	U12-11
U28-3	U31-13
U37-1	U40-12
U1-3 (PIN)	U8-11

JUMPER CHART
W1
W2
W3
W5
W7 B-C
W8 A-B
W9 A-B
W10 B-C
W11 B-C
W12 B-C
W13 B-C
W14 B-C
W15
W17 A-B
W18 A-B
W19 A-B
W20 A-B
W22
W23 B-C
W24 B-C
W25 B-C
W26 B-C
W28 A-B
W29 B-C
W30 B-C
W31 A-B
W32 B-C
W33 B-C
W34 B-C
W35 B-C

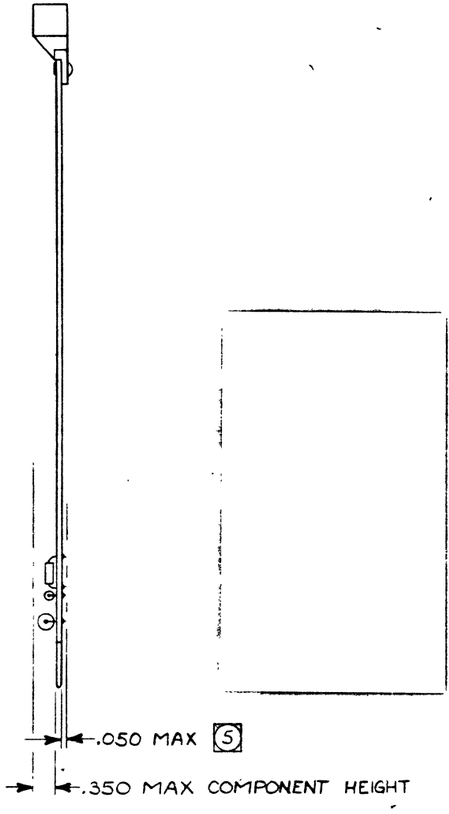

PRODUCTION RELEASE

5 COMPONENT LEAD TRIM AND SOLDER BUILD-UP TO BE AS NOTED.

4 MARK ASSEMBLY VERSION NUMBER, LATEST REVISION LETTER, EIA DATE CODE AND SERIAL NUMBER WITH .12 HIGH CHARACTERS USING CONTRASTING INK PER MIL-M-13231, GROUP III. LOCATION TO BE APPROXIMATELY AS SHOWN.

3 COMPONENT DESIGNATION ARE FOR REFERENCE ONLY AND DO NOT APPEAR ON PART.

2. FOR SCHEMATIC DIAGRAM SEE SD703340.

1. ASSEMBLE AND INSPECT PER WORKMANSHIP STANDARDS MANUAL.

NOTES: UNLESS OTHERWISE SPECIFIED

										5
										4
										3
				X			FOR PARTS LIST SEE PL703340-101			2
					X		FOR PARTS LIST SEE PL703340-100			1
				-101	-100	NOTE PART OR IDENTIFYING NO.	NOMENCLATURE OR DESCRIPTION / MATERIAL	SPEC/SOURCE	CODE IDENT NO.	FIND NO.
PART/ASSY NO. & QTY PER ASSY						PARTS LIST				
				E	E					

PART/ASSY REV LTR		
-101	F.DAL	PM-DCVIIA
-100	F.NAL	PM-DCVI-A
PART NO.	NEXT ASSY	USED ON
APPLICATION		

DO NOT SCALE DRAWING

SCREW THREADS PER HANDBOOK H-28

COUNTERBORE AND SPOTFACE FILLET RADII TO BE .010 MAXIMUM

REMOVE ALL BURRS AND BREAK SHARP EDGES EQUIVALENT TO .010R

ROUGHNESS OF MACHINED SURFACES 125 PER USAS B46.1

STANDARD HOLE TOLERANCE PER ANSI B32.1

TOLERANCES ON: .XX = ± .03 .XXX = ± .010 ANGLES = ± 0° 30'

INTERPRET DIMENSIONS AND TOLERANCES PER USAS Y14.5

DIMENSIONS ARE IN INCHES AND APPLY AFTER HEAT TREAT AND FINISH

UNLESS OTHERWISE SPECIFIED

CONTRACT NO.

DRAWN	M.CREEDEN	6-22-79
CHECK	L. Turkis	6-22-79
ENGR	L. Bonus	6-26-79
PROJ. ENGR		
PROD. DESIGN	Dick Funk	6/27/79
OTHER APPROVALS		

Plessey Peripheral Systems

DWG TITLE: BOARD ASSEMBLY, Q BUS DISC CONTROLLER, PM-DCVIIA

SIZE	CODE IDENT NO.	DWG NO.
D	52648	703340

SCALE: 1/1 SHEET 1 OF 1

DISTR NO. 1234280

REV E

DWG NO 703340

BISHOP GRAPHICS/ACCUPRESS REORDER NO. A 1015

DATA LIST

Plessey Memories Incorporated
Santa Ana, California

UNIT ASSY TITLE:
BOARD ASSEMBLY,
QBUS DISC CONTROLLER,
PM-DCV11A, 2400 EPM

PREPARED BY: TOM COMEY 3-7-79
CHECKED BY: L. Tunkis 3-8-79
DESIGN ENGR: R. [illegible] 6-25-79
PROJ ENGR: A Vuyia 3/8/79
MFG: [illegible] 3-9-79

DATA LIST NO. PL703340-100
REV LTR E
CODE IDENT NO. 52648
DWG NO. 23H5780
SH 1 OF 2
CONTRACT NO. PM-DCV11A

REVISIONS

LTR	DESCRIPTION	APPROVED	DATE	LTR	DESCRIPTION	APPROVED	DATE
A	REL TO PROD EO3156	[illegible]	7-19-79				
B	INCORP EO3264	[illegible]	8-30-79				
C	INCORP EO3330 & 3330-1	[illegible]	11-19-79				
D	INCORP EO 3496	[illegible]	2-7-80				
E	INCORP EO 3546	[illegible]	2-20-80				

PRODUCTION RELEASE

REV STATUS OF SHEETS	REV LTR	E	D	E	C	D	E	B			
	SHEET	1	2	3	4	5	6	7	8	9	10

PARTS LIST

Plessey Peripheral Systems

CODE IDENT NO. 52648
PARTS LIST NO. PL703340-100
SH 2
REV LTR D

CROSS INDEX OF REFERENCE DESIGNATIONS TO FIND NO.

REFERENCE DESIGNATION	FIND NO.	REFERENCE DESIGNATION	FIND NO.	REFERENCE DESIGNATION	FIND NO.	REFERENCE DESIGNATION	FIND NO.
U1	5	U38	25	R2	46		
U2	6	U40,65	26	R5,7	47		
U3	7	U41	27	R9	48		
U4,5,56,57,74,	8	U45	28	R10,13,16	49		
U6,15,37	9	U46,48,28	29	R14,15,17	50		
U7,16,25	10	U47, U39	30		51		
U8,12,35,43,49, 51,60,69,78	11	U52,61,70	31	Y1	52		
		U53,62,71,80	32	C1,2,3,4,6,7,8,9, 10,11,12,13,14,15, 16,17,18,20,21,22, 23,24,25,26,27	53		
U9,18,27	12	U54,63,72,81	33				
U10,20,29	13	U55,82	34				
U11	14	U58,67,76	35				
U13,33	15	U64,73	36	C5	54		
U17	16	U66	37	C19	55		
U19	17	U75	38	C28,29,30,31	56		
U21,30	18	U79	39	U34	57		
U22,31	19	U83,84	40	U42	58		
U23	20		41	U50	59		
U24	21		42	U59	60		
U26,32	22	RU1,2	43	U68	61		
		R18	44	U77	62		
U36,44	24	R1,3,4,6,8,11 12	45				

PARTS LIST	Plessey Peripheral Systems	CODE IDENT NO. 52648	PARTS LIST NO. PL703340-100	SH 3	REV LTR E

CHANGE CODE	REV LTR	NOTE	QTY REQD	PART OR IDENTIFYING NO.	NOMENCLATURE OR DESCRIPTION	SPECIFICATION	CODE IDENT NO.	ZONE	FIND NO.	SYM	C/I USAGE C/I CODE	C/I USAGE INV ON HAND	C/I USAGE PAR	C/I USAGE UNIT COST
			1	703339-001	PRINTED WIRING BOARD				1					
			2	701339-001	HANDLE				2					
			4	MS16535 -154	RIVET/TUBULAR, OVAL HD .123 DIA X .188 LG				3					
E			11	US-2-20 -110-G-B	SOCKET, 20 PIN	SCANBE			4					
			1	SN74S74	I.C./DUAL D-TYPE POS EDG-TRIG F/F W/PRESET/CLEAR	T.I.			5					
			1	SN74S86	I.C./QUADRUPLE 2-INPUT EXCLUSIVE-OR GATES	T.I.			6					
			1	SN74S04	I.C./HEX INVERTER	T.I.			7					
			5	SN74LS74	I.C./DUAL D-TYPE POS EDG-TRIG F/F W/PRESET/CLEAR	T.I.			8					
			3	SN74S175	I.C./QUAD D-TYPE F/F W/CLEAR	T.I.			9					
			3	SN74S251	I.C./DATA SELECTOR/MULTI-PLEXERS W/3-STATE OUTPUT	T.I.			10					
			9	SN74LS374	I.C./OCTAL D-TYPE TRANSPARENT LATCHES EDG-TRIG FF	T.I.			11					
			3	SN74LS273	I.C./OCTAL D-TYPE F/F W/CLEAR	T.I.			12					
C			3	SN74S240	I.C./OCTAL BUFFERS/LINE DRIVERS/LINE RECEIVERS	T.I.			13					

FORM 000000 BISHOP GRAPHICS/ACCUPRESS REORDER NO. A-7498

PARTS LIST	Plessey Peripheral Systems	CODE IDENT NO. 52648	PARTS LIST NO. PL703340-100	SH 4	REV LTR C

CHANGE CODE	REV LTR	NOTE	QTY REQD	PART OR IDENTIFYING NO.	NOMENCLATURE OR DESCRIPTION	SPECIFICATION	CODE IDENT NO.	ZONE	FIND NO.	SYM	C/I USAGE C/I CODE	C/I USAGE INV ON HAND	C/I USAGE PAR	C/I USAGE UNIT COST
			1	SN74123	I.C./RETRIGGERABLE MONOSTABLE MULTIVIBRATORS	T.I.			14					
			2	SN74S00	I.C./QUAD 2-INPUT POS-NAND GATE	T.I.			15					
			1	SN74S139	I.C./DECODER/DEMULTIPLEXERS	T.I.			16					
C			1	100141-100	I.C./PROM 256 X 8				17					
			2	AM29701	I.C./NON-INVERTING 64-BIT RANDOM ACCESS MEMORY	AMD			18					
			2	9403	I.C./FIFO BUFFER MEMORY	FAIRCHILD			19					
			1	SN74S08	I.C./QUAD 2-INPUT POS-AND GATE	T.I.			20					
			1	SN74S10	I.C./TRIPLE 3-INPUT POS-NAND GATES	T.I.			21					
			2	SN74LS04	I.C./HEX INVERTER	T.I			22					
									23					
			2	AM2901ADC	I.C./4 BIT BI-POLAR MICRO PROCESSOR SLICE	AMD			24					
			1	SN74S158	I.C./QUAD 2 LINE TO LINE DATA SEL/MULTIPLEXERS	T.I.			25					
			2	SN74LS08	I.C./QUAD 2-INPUT POS-AND GATE	T.I.			26					

FORM 000000 BISHOP GRAPHICS/ACCUPRESS REORDER NO. A-7498

PARTS LIST	Plessey Peripheral Systems	CODE IDENT NO. 52648	PARTS LIST NO. PL703340-100	SH 5	REV LTR D

CHANGE CODE	TAB LTR	NOTE	QTY REQD	PART OR IDENTIFYING NO.	NOMENCLATURE OR DESCRIPTION	SPECIFICATION	CODE IDENT NO.	ZONE	FIND NO.	SYM	C/I USAGE C/I CODE	C/I USAGE INV ON HAND	C/I USAGE PAR	C/I USAGE UNIT COST
			1	SN74S02	I.C./QUAD 2-INPUT POS-NOR GATE	T.I.			27					
			1	SN74S153	I.C./DUAL 4 LINES TO 1 LINE DATA SEL/MULTIPLEXERS	T.I.			28					
D			3	SN74S32	I.C./QUAD 2-INPUT POS-OR GATES	T.I.			29					
			2	SN74LS00	I.C./QUAD 2-INPUT POS-NAND GATE	T.I.			30					
			3	SN74S138	I.C./DECODER, DEMULTIPLEXER	T.I.			31					
			4	AM2908	I.C./QUAD BUS TRANCEIVER	AMD			32					
			4	136000-038	I.C./MONOLITHIC QUAD 2-INPUT DRIVER				33					
			2	DM8136	I.C./6-BIT UNIFIED BUS COMPARATOR	NATIONAL			34					
			3	AM2911	I.C./4-BIT MICRO-PROCESSOR SEQUENCER	AMD			35					
			2	SN74LS244	I.C./OCTAL BUFFERS/LINE DRIVERS 3-STATE OUTPUTS	T.I.			36					
			1	SN74LS27	I.C./TRIPLE 3-INPUT POS-NOR GATES	T.I.			37					
			1	DS8640	I.C./QUAD NOR UNIFIED BUS RECEIVER	NATIONAL			38					
			1	SN74LS174	I.C./HEX/QUAD D-TYPE F/F W/CLEAR	T.I.			39					

PARTS LIST	Plessey Peripheral Systems	CODE IDENT NO. 52648	PARTS LIST NO. PL703340-100	SH 6	REV LTR E

CHANGE CODE	TAB LTR	NOTE	QTY REQD	PART OR IDENTIFYING NO.	NOMENCLATURE OR DESCRIPTION	SPECIFICATION	CODE IDENT NO.	ZONE	FIND NO.	SYM	C/I USAGE C/I CODE	C/I USAGE INV ON HAND	C/I USAGE PAR	C/I USAGE UNIT COST
			2	DS8641	I.C./QUAD UNIFIED BUS TRANSCEIVER	NATIONAL			40					
									41					
E			2	DILB40P-108	SOCKET, 40 PIN, DIP	BURNDY			42					
			2	898-5-330/390	RESISTOR MODULE, 330/390Ω	BECKMAN			43					
			1	RC07GF 102J	RESISTOR/1KΩ, ±5%, 1/4W	MIL-R-11			44					
			7	RC07GF 472J	RESISTOR/4.7K, 1/4W, ±5%	MIL-R-11			45					
			1	RC07GF 823J	RESISTOR/82K, 1/4W, ±5%	MIL-R-11			46					
			2	RC07GF 471J	RESISTOR/470Ω, 1/4W, ±5%	MIL-R-11			47					
			1	RC07GF 151J	RESISTOR/150Ω, 1/4W, ±5%	MIL-R-11			48					
			3	RC07GF 181J	RESISTOR/180Ω, 1/4W, ±5%	MIL-R-11			49					
			3	RC07GF 391J	RESISTOR/390Ω, 1/4W, ±5%	MIL-R-11			50					
			30	530153-2	SHUNT	AMP			51					
			1	MXO-40-2-20MHZ	CRYSTAL/20 MHZ	CTS			52					

PARTS LIST	Plessey Peripheral Systems	CODE IDENT NO. 52648	PARTS LIST NO. PL703340-100	SH 7	REV LTR B

CHANGE CODE	ADV CHG NO	NOTE	QTY REQD	PART OR IDENTIFYING NO.	NOMENCLATURE OR DESCRIPTION	SPECIFICATION	CODE IDENT NO.	ZONE	FIND NO.	SYM	C/I USAGE C/I CODE	C/I USAGE INV ON HAND	C/I USAGE PAR	C/I USAGE UNIT COST
			25	CGA 103Z5DZ	CAPACITOR/.01UF	UNITRODE			53					
			1	CK05BX 821K	CAPACITOR/820PF, ±10%, 200V	MIL-C-11015			54					
			1	CK05BX 331K	CAPACITOR/330PF, ±10%, 200V	MIL-C-11015			55					
			4	150D475X 9035B2	CAPACITOR/4.7UF, ±10%, 35V	SPRAGUE			56					
			1	100161-101	I.C./PROM, 3 STATE OUTPUT				57					
			1	100161-102	I.C./PROM, 3 STATE OUTPUT				58					
			1	100161-103	I.C./PROM, 3 STATE OUTPUT				59					
			1	100161-104	I.C./PROM, 3 STATE OUTPUT				60					
			1	100161-105	I.C./PROM, 3 STATE OUTPUT				61					
			1	100161-106	I.C./PROM, 3 STATE OUTPUT				62					
			93	86094-2	CONTACT POST, .025 SQ	AMP			63					
B			A/R	5951-6	WIRE/ 30 AWG, KYNAR COLOR: BLUE	ALPHA WIRE			64					
			REF	SD703340	SCHEMATIC DIAGRAM				65					

BISHOP GRAPHICS/ACCUPRESS REORDER NO. A-7496

The information herein is the property of PLESSEY MICROSYSTEMS. Transmittal receipt or possession of the information does not convey, license or imply any right to use, sell, or manufacture from this information and no reproduction or publication of it, in whole or in part, shall be made without written authorization from PLESSEY MICROSYSTEMS.

REVISIONS			
ZONE	LTR	DESCRIPTION	DATE	APPROVED
	A	REL TO PROD EO 3156	7-16-79	
	B	INCORP EO3264	7-30-79	
	C	INCORP EO 3330 & 3330-1	11-9-79	
	D	INCORP EO 3436 & -1	2-7-80	

LAST REFERENCE DESIGNATION USED	
RESISTOR	R18
CAPACITOR	C27
INTEGRATED CIRCUIT	U84
RESISTOR MODULE	RU2
CRYSTAL	Y1

REFERENCE DESIGNATION NOT USED	
INT CKT	U14, 39

REF DESIG.	GATES USED PER TOTAL	PART NUMBER
U11	1/2	74123
U28	1/4	7453Z
U66	2/3	74LS27

SIDE 2		SIDE 1	SOLDER SIDE / COMPONENT SIDE
	A	BIRQ5L	CONNECTOR A
	B	BIRQ6L	
	C	BADI6	
	D	BADI7	
BDOUTL	E		
BRPLYL	F		
BDINL	H		
BSYNCL	J		
BWTBTL	K		
BIRQ4L	L		
BDAKIL	M		
BDRQL	N	BDMRL	
BES7L	P		
BDIN3L	R		
BDIN0L	S		
BINITL	T		
BDAL0L	U		
BDALIL	V		
	A	BDCOKH	CONNECTOR B
	B		
	C		
	D		
BDAL2L	E		
BDAL3L	F		
BDAL4L	H		
BDAL5L	J		
BDAL6L	K		
BDAL7L	L		
BDAL8L	M		
BDAL9L	N	BSACKL	
BDAL10L	P	BIRQ7L	
BDAL11L	R	---	
BDAL12L	S		
BDAL13L	T		
BDAL14L	U		
BDAL15L	V		

SIDE 2		SIDE 1	SOLDER SIDE / COMPONENT SIDE
	A		CONNECTOR C
	B		
	C		
	D		
	E		
	F		
	H		
	J		
	K		
	L		
	M		
	N		
	P		
	R		
	S		
	T		
	U		
	V		
	A		CONNECTOR D
	B		
	C		
	D		
	E		
	F		
	H		
	J		
	K		
	L		
	M		
	N		
	P		
	R		
	S		
	T		
	U		
	V		

SIDE 2		SIDE 1	SOLDER SIDE / COMPONENT SIDE
	A		CONNECTOR E
	B		
	C		
	D		
	E		
	F		
	H		
	J		
	K		
	L		
	M		
	N		
	P		
	R		
	S		
	T		
	U		
	V		
	A		CONNECTOR F
	B		
	C		
	D		
	E		
	F		
	H		
	J		
	K		
	L		
	M		
	N		
	P		
	R		
	S		
	T		
	U		
	V		

J1

GND	1	2	
ATTNØL	3	4	ATTN1L
ATTN2L	5	6	ATTN3L
UNIT SELØL	7	8	UNIT SEL 1L
UNIT SEL 2L	9	10	UNIT SEL 3L
GND	11	12	SCØL
SC1L	13	14	SC2L
SC3L	15	16	ADD 256L
GND	17	18	
SCTRL	19	20	DRYL
CYL ADDØL	21	22	CYL ADD 1L
CYL ADD 2L	23	24	CYL ADD 3L
CYL ADD 4L	25	26	CYL ADD 5L
CYL ADD 6L	27	28	CYL ADD 7L
	29	30	GND
STROBEL	31	32	RESTOREL
R/W/SRDYL	33	34	SINL
ACKL	35	36	IIAL
WRT PRTL	37	38	HDSELL
DISC SELL	39	40	WRT PROTL
GND	41	42	WRTDTAL
DRLIL	43	44	
DSCLKL	45	46	WRTGTL
DSDATAL	47	48	RDGTL
DPLL	49	50	GND

JUMPER CHART
W1
W2
W3
W5
W7 B-C
W8 A-B
W9 A-B
W10 B-C
W11 B-C
W12 B-C
W13 B-C
W14 B-C
W15
W17 A-B
W18 A-B
W19 A-B
W20 A-B
W22
W23 B-C
W24 B-C
W25 B-C
W26 B-C
W28 A-B
W29 B-C
W30 B-C
W31 A-B
W32 B-C
W33 B-C
W34 B-C
W35 B-C

PRODUCTION RELEASE

5. CAPACITOR VALUES ARE MICROFARADS.
4. RESISTOR VALUES ARE IN OHMS, ± 5%, 1/4W
3. DESIGNATIONS SHOWN IN PARENTHESIS INDICATES WHERE SIGNAL ORIGINATES OR TERMINATES.
   (2/B3)
   - ZONE DESIGNATION
   - SHEET NUMBER
2. SIGNALS SHOWN IN RECTANGLES ARE I/O CONNECTIONS.
   A A I
   - BOARD SIDE
   - PIN DESIGNATION
   - CONNECTOR DESIGNATION

1. FOR ASSEMBLY DRAWING SEE 703340

NOTES: UNLESS OTHERWISE SPECIFIED:

NOTE	PART OR IDENTIFYING NO.	NOMENCLATURE OR DESCRIPTION / MATERIAL	SPEC/SOURCE	CODE IDENT NO.	FIND NO.
		PARTS LIST			

PART/ASSY NO & QTY PER ASSY

PART/ASSY REV LTR

703340-100 PM-DCVIIA

PART NO. | NEXT ASSY | USED ON

APPLICATION

DO NOT SCALE DRAWING

CONTRACT NO.

Plessey Microsystems

DRAWN	CHRIS BUNT	2-4-80
CHECK		
ENGR		
PROJ. ENGR		
PROD. DESIGN		
OTHER APPROVALS		

DWG TITLE SCHEMATIC DIAGRAM
Q BUS, DISC CONTROLLER
PM-DCVIIA

SIZE D | CODE IDENT NO. 52648 | DWG NO. SD703340

SCALE ~ | SHEET | OF 8

DSTN NO.

The information hereon is the property of PLESSEY PERIPHERAL SYS. Transmittal receipt or possession of the information does not comply, license, or imply any rights to use, sell, or manufacture from this information and no reproduction or publication of it in whole or in part, shall be made without written authorization from PLESSEY PERIPHERAL SYS.

REVISIONS				
ZONE	LTR	DESCRIPTION	DATE	APPROVED
/		SEE SHEET 1		

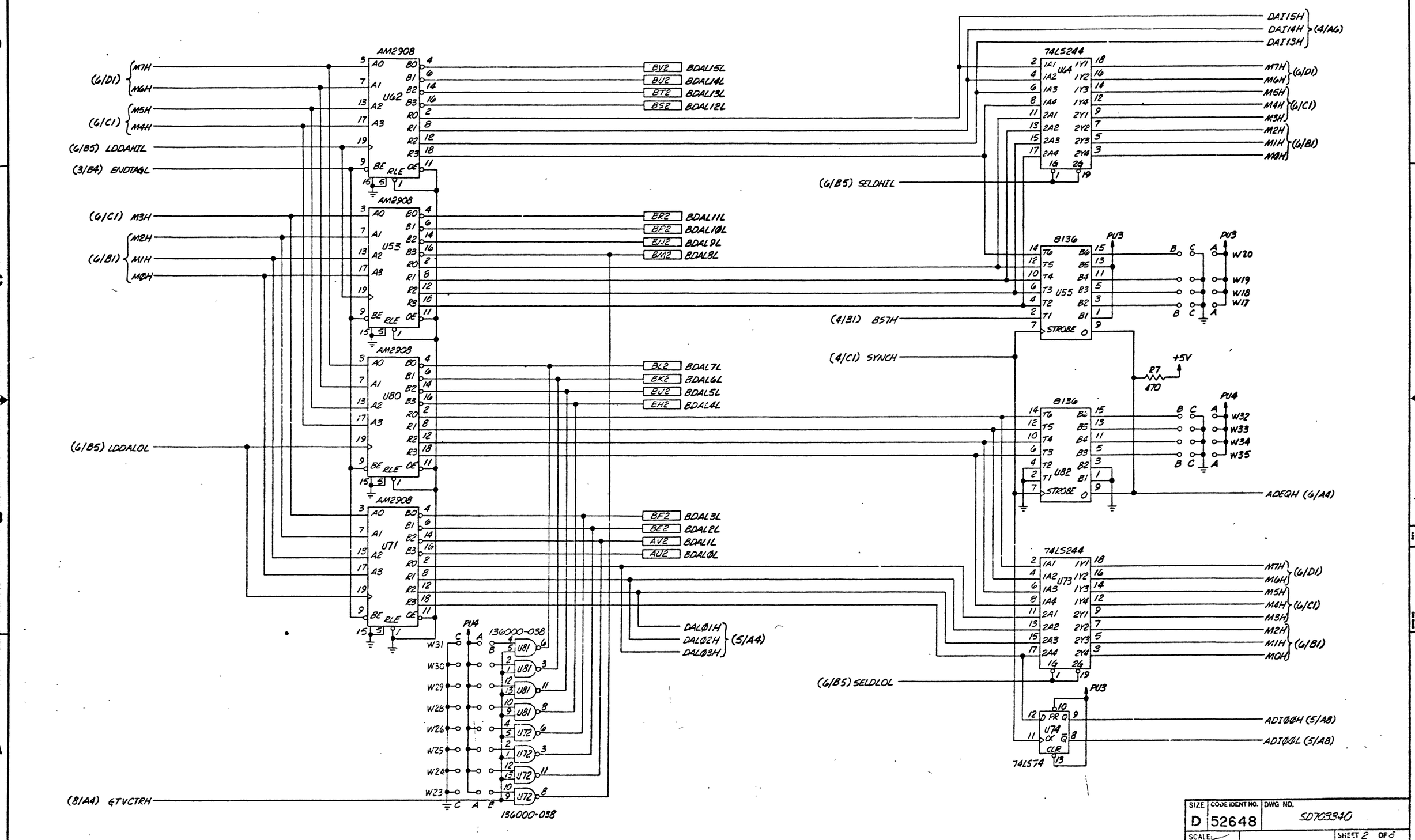

SIZE	CODE IDENT NO.	DWG NO.
D	52648	SD703340
SCALE:		SHEET 2 OF 6
		DISTR NO.

SD703340 D

The information hereon is the property of PLESSEY PERIPHERAL SYS. Transmittal receipt or possession of the information does not comply, license or imply any rights to use, sell or manufacture from this information and no reproduction or publication of it in whole or in part, shall be made without written authorization from PLESSEY PERIPHERAL SYS.

REVISIONS				
ZONE	LTR	DESCRIPTION	DATE	APPROVED
/		SEE SHEET 1		

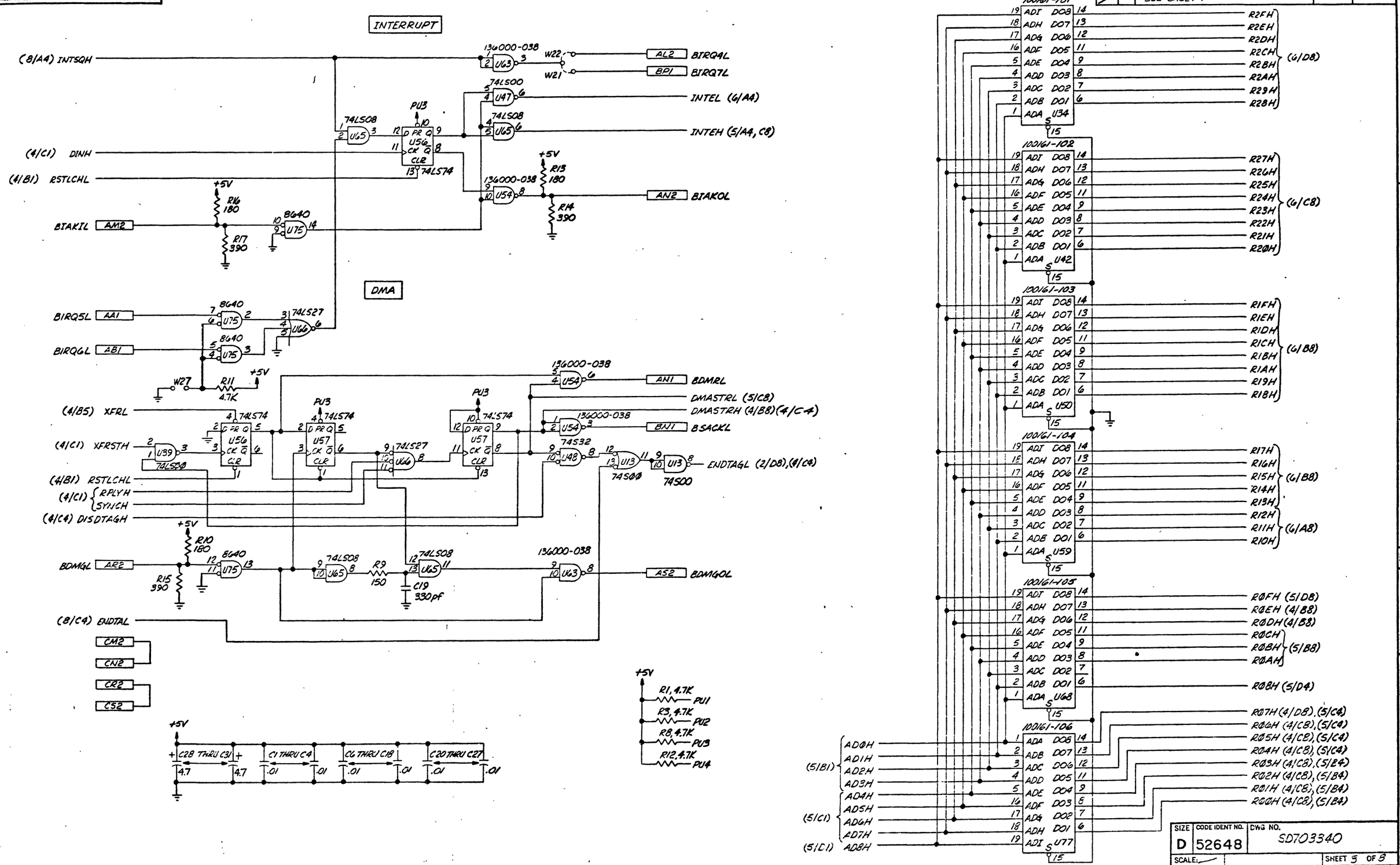

SIZE	CODE IDENT NO.	DWG NO.
D	52648	SD703340
SCALE: —		SHEET 5 OF 8

DISTR NO.

BISHOP GRAPHICS/ACCUPRESS REORDER NO. A-1016

The information hereon is the property of PLESSEY PERIPHERAL SYS. Transmittal receipt or possession of the information does not comply, license or imply any rights to use, sell or manufacture from this information and no reproduction or publication of it, in whole or in part, shall be made without written authorization from PLESSEY PERIPHERAL SYS.

REVISIONS				
ZONE	LTR	DESCRIPTION	DATE	APPROVED
/		SEE SHEET 1		

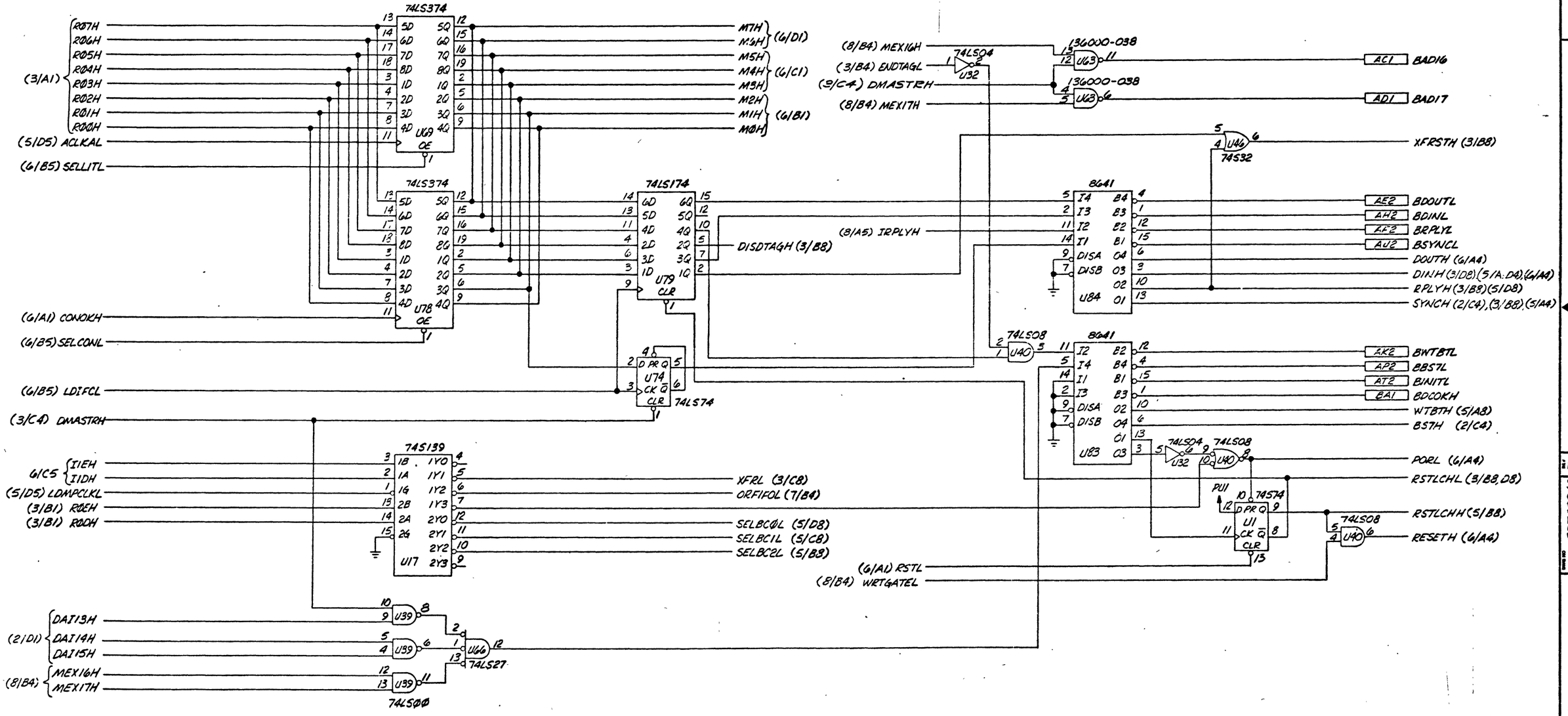

SIZE	CODE IDENT NO.	DWG NO.
D	52648	SD703340

SCALE: — SHEET 4 OF 8 DISTR. NO.

BISHOP GRAPHICS/ACCUPRESS BLONDER NO. A 1016

The information hereon is the property of PLESSEY PERIPHERAL SYS. Transmittal receipt or possession of the information does not comply, license or imply any rights to use, sell, or manufacture from this information and no reproduction or publication of it in whole or in part, shall be made without written authorization from PLESSEY PERIPHERAL SYS.

REVISIONS				
ZONE	LTR	DESCRIPTION	DATE	APPROVED
/		SEE SHEET 1		

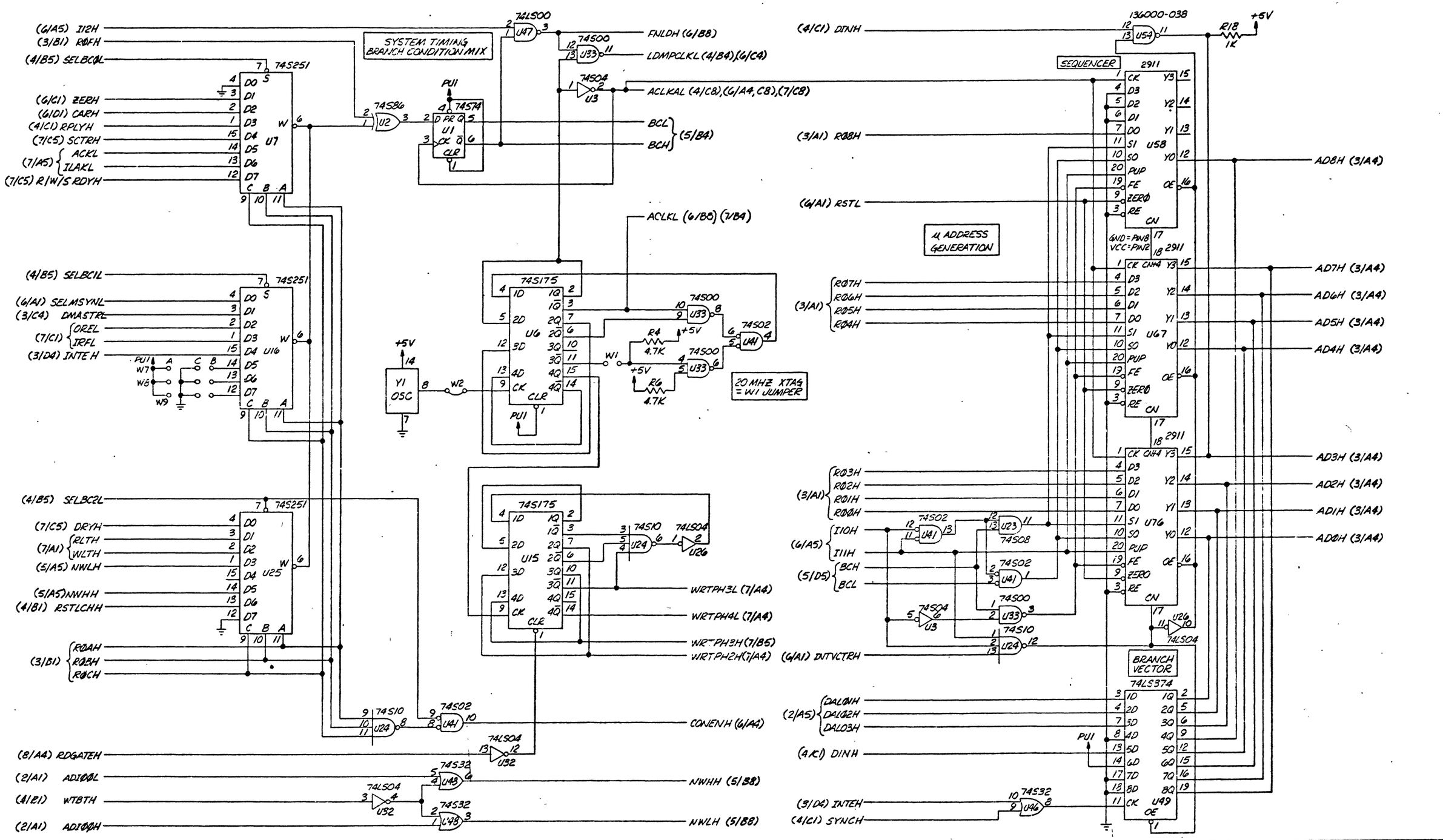

SIZE	CODE IDENT NO.	DWG NO.
D	52648	SD703340
SCALE: —		SHEET 5 OF 8

DISTR NO.

© BISHOP GRAPHICS, ACCUPRESS REORDER NO. A 1016

The information hereon is the property of PLESSEY PERIPHERAL SYS. Transmittal, receipt or possession of the information does not convey, license or imply any rights to use, sell or manufacture from this information and no reproduction or publication of it, in whole or in part, shall be made without written authorization from PLESSEY PERIPHERAL SYS

REVISIONS				
ZONE	LTR	DESCRIPTION	DATE	APPROVED
		SEE SHEET 1		

SRC = MPU
DST = FIL

I2FH (6/A4)
I2EH (6/A4)
I2DH, I2CH (7/D4)
I2BH (7/C4)
I2AH (7/C4)
I29H, I28H (7/D4)
I27H, I26H (7/C4)

74LS374 U35: (3/D1) R2FH, R2EH, R2DH, R2CH, R2BH, R2AH, R29H, R28H; (5/D5) ACLKAL
74LS374 U43: (3/D1) R27H, R26H, R25H; (3/C1) R24H, R23H, R22H, R21H, R20H
74LS374 U51: (3/C1) R1FH, R1EH, R1DH, R1CH, R1BH, R1AH, R19H, R18H
74LS374 U60: (3/B1) R17H, R16H, R15H, R14H, R13H, R12H, R11H, R10H

(5/D5) LDMPCLKL
74LS04 U32
74S32 U46: SELDSL (7/C8); SELDSØL (7/A8)
IIFH (7/C4)
IIEH (4/B8)
IIDH (4/B8)

74S138 U52 (PU4): SELFIOFL (7/B4); SELLITL (4/C8); SELDLOL (2/A4); SELDHIL (2/C4); SELCONL (4/B8)
74S138 U61: ENRAML (7/D4); LDFIFOL (7/C4); LDRAML (7/D4); LDIFCL (4/B8); LDDALOL (2/B8); LDDAHIL (2/D8)
74S08 U23
74LS04 U26
74S138 U70: LDDVØL (8/B8); LDDV1L (8/A8); LDDV2L (8/C8)

I12H (5/D8)
I11H, I10H (5/B4)

BCD / BSD DECODE INSTRUCTION REGISTER

2901A U36: CARH (5/D8),(6/A4); M7H (2/B1, D1, D8),(4/D5),(7/D1, D5)(8/D8); M6H; M5H; M4H; F=0; ZERH (5/D8)
2901A U44: M3H; M2H; M1H; MØH; F=Ø
(2/B1, D1, D8)(4/C5),(7/D1, D5),(8/D8)
(2/B1, C8, D1)(4/C5),(7/C1, C5),(8/D8)
+5V, R5 470

74S153 U45 (PU2)
74S175 U37: (6/D1) CARH; (5/A5) CONENH; (4/B1) RESETH; (3/D4) INTEL; (5/D5) ACLKAL; (6/D5) I2FH, I2EH
74LS00 U47
74S32 U48: (4/C1) DOUTH, DINH
74LS00 U47
74LS08 U40: (2/B1) ADE3H; (4/B1) PORL

CONØKH (4/B8)
RSTL (4/A4),(5/C4),(8/C8)
INTVCTRH (5/B4)
SELMSYNL (5/C8)
RSTSPL 8/A8

MICRO PROCESSOR

SIZE	CODE IDENT NO.	DWG NO.
D	52648	SD703340

SCALE | SHEET 6 OF 8 | DISTR NO.

© B-SHOP GRAPHICS ACCUPRESS REGISTER NO. A1016

The information hereon is the property of PLESSEY PERIPHERAL SYS. Transmittal receipt or possession of the information does not comply, license or imply any rights to use, sell or manufacture from this information and no reproduction or publication of it, in whole or in part, shall be made without written authorization from PLESSEY PERIPHERAL SYS.

REVISIONS				
ZONE	LTR	DESCRIPTION	DATE	APPROVED
/		SEE SHEET 1		

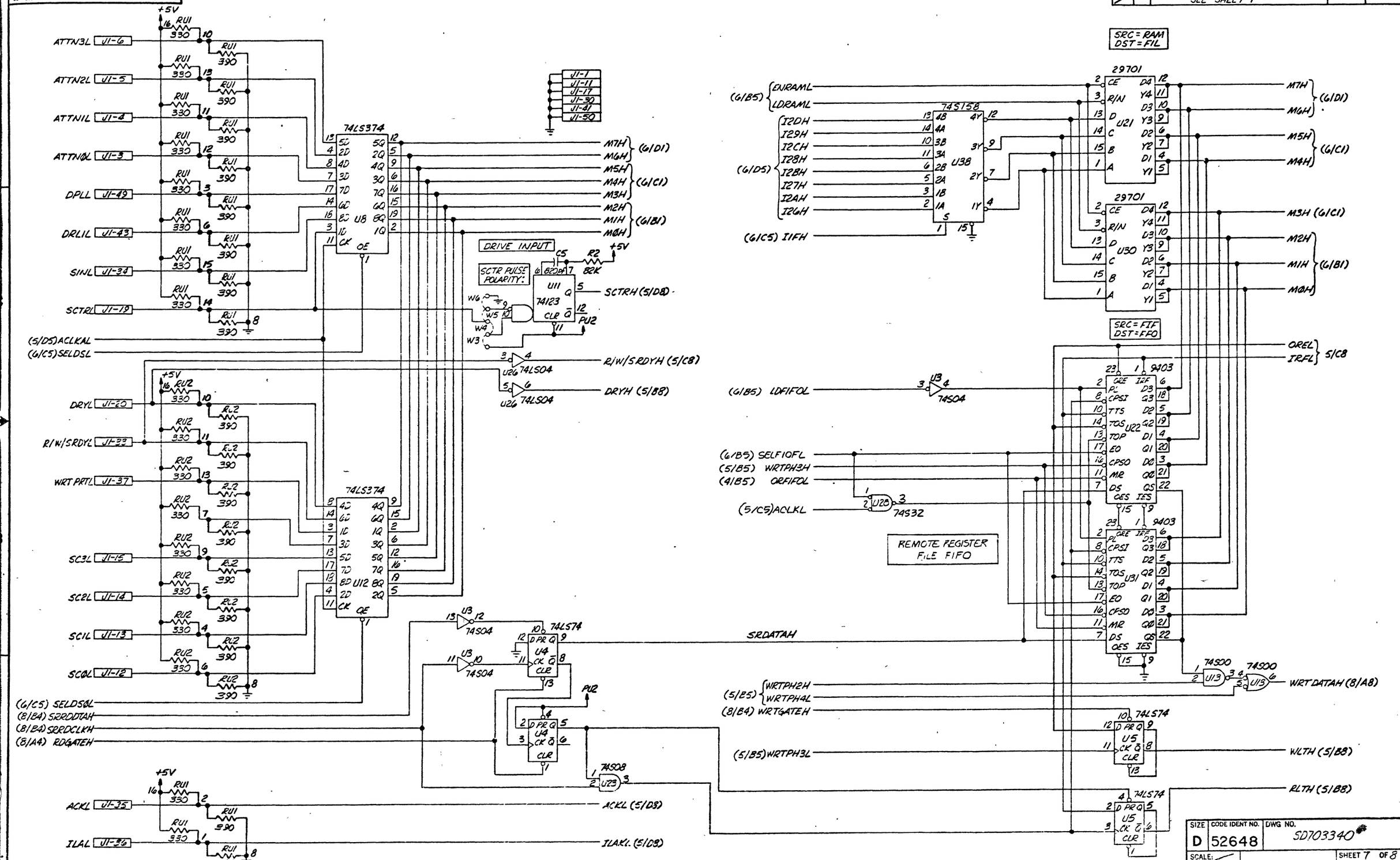

SIZE	CODE IDENT NO.	DWG NO.
D	52648	SD703340
SCALE: /		SHEET 7 OF 8

DISTR NO.

SD703340 D

The information hereon is the property of PLESSEY PERIPHERAL SYS. Transmittal receipt or possession of the information does not comply, license or imply any rights to use, sell or manufacture from this information and no reproduction or publication of it in whole or in part, shall be made without written authorization from PLESSEY PERIPHERAL SYS.

REVISIONS				
ZONE	LTR	DESCRIPTION	DATE	APPROVED
/		SEE SHEET 1		

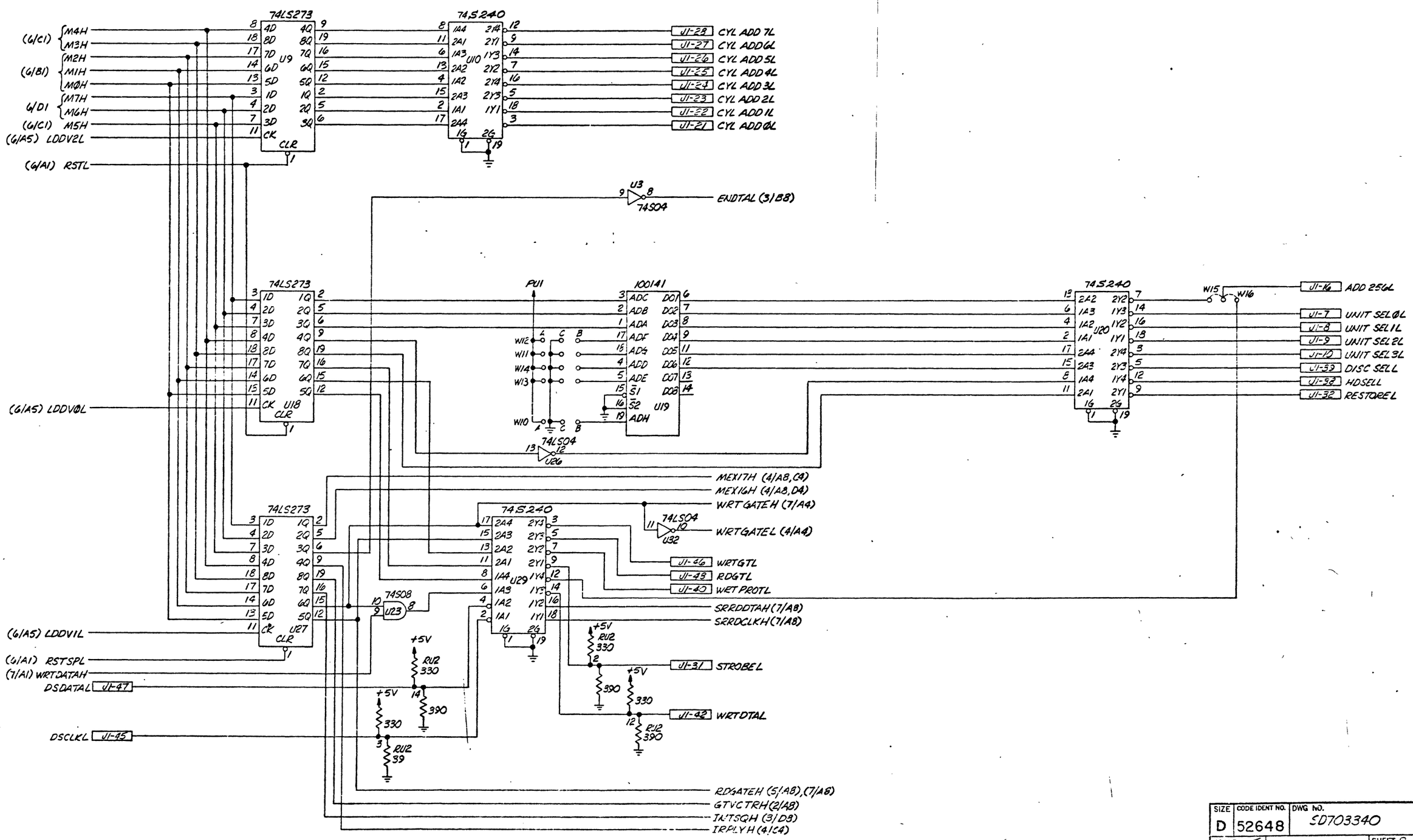

SIZE	CODE IDENT NO.	DWG NO.
D	52648	SD703340
SCALE		SHEET 8 OF 8

DISTR NO

© B. SHOP GRAPHICS/ACCUPRESS REORDER NO. A 1016