data acquisition systems

NUCLEAR DATA INC

NUCLEAR DATA, INC.
Golf and Meacham Roads
Schaumburg, Illinois 60196

March, 1978

IM 88-0604-01
OPERATOR'S INSTRUCTION MANUAL
ND600 MULTICHANNEL ANALYZER SYSTEM

Copyright 1978, by Nuclear Data, Inc.
Printed in U.S.A.

"THIS DOCUMENT IS THE EXCLUSIVE PROPERTY OF NUCLEAR DATA, INC. AND MAY NOT BE REPRODUCED, NOR MAY THE INFORMATION CONTAINED THEREIN OR DERIVABLE THEREFROM BE USED IN ANY MANNER, EXCEPT BY WRITTEN PERMISSION OF NUCLEAR DATA, INC. THE PROPRIETARY RIGHTS TO THE AFORESAID INFORMATION, BOTH OF A PATENTABLE AND UNPATENTABLE NATURE, ARE EXPRESSLY RESERVED TO NUCLEAR DATA, INC."

ADDENDUM I
VERSION 08 FIRMWARE OPERATIONAL CHANGES

The ND600 Version 08 Firmware changes the following operating characteristics of the ND600 Analyzer System:

1. The operation of the ACQ pushbutton has been altered such that depressing the ACQ pushbutton alternately initiates or terminates acquisition with an acquisition pause accomplished by depressing the minus (-) pushbutton at the operand pushbutton array and they depressing the ACQ pushbutton. Continuation of acquisition from a pause state is accomplished by depressing the ACQ pushbutton. Previous versions of the ND600 firmware allowed acquire, pause, acquire by successive depressions of the ACQ pushbutton. Termination of acquire from a pause state was accomplished by depressing the minus (-) pushbutton and then the ACQ pushbutton.

2. The characters "ND600" now appear in the first line of all alphanumeric status displays.

CONTENTS

CHAPTER	TITLE	PAGE
I	INTRODUCTION	1-1
	System Description	1-1
	System Specifications	1-2
	ND600 Terminal	1-2
	ND600 Electronics Enclosure	1-2
	Data Input/Output Peripheral Interface Options	1-5
	Operational Function Firmware Option Packages	1-6
II	INSTALLATION	2-1
	General	2-1
	Unpacking and Inspection	2-1
	ND600 Electronics Enclosure	2-1
	ND600 Terminal	2-1
	Ventilation	2-2
	Power Source	2-2
	ADC Installation	2-2
	Optional System Component Board Installation	2-3
	System Interconnection	2-3
	ND600 Terminal Installation	2-4
	X-Y Plotter Interconnection	2-5
	Power Connection	2-5
III	CONTROL, INDICATOR AND CONNECTOR DESCRIPTIONS	3-1
	General	3-1
	ND600 Terminal Alphanumeric Status Display	3-1
	Page 1 - Display Parameters	3-2
	Page 2 - Data Acquisition Parameters	3-3

CHAPTER	TITLE	PAGE
	Page 3 - Data Manipulation Parameters	3-4
	Page 4 - Auto Analysis Parameters	3-5
	ND600 Terminal Pushbutton Keyboard	3-6
	Display Pushbuttons	3-6
	Function Pushbuttons	3-8
	Status Pushbuttons	3-12
	Operand Pushbutton Array	3-13
	ND600 Terminal CRT Controls	3-13
	ND600 Electronics Enclosure (Rear Panel)	3-14
IV	OPERATING PROCEDURES	4-1
	Introduction	4-1
	Definition of Terms and Description of Common Spectral Features	4-1
	Principles of Radiation Analysis	4-4
	Analog to Digital Converter	4-6
	ND600 Terminal	4-7
	Data Acquisition	4-8
	Pulse Height Analysis	4-8
	Initial System Set-up and Spectrum Storage	4-8
	System Calibration	4-10
	Alphanumeric Status Page Selection and Parameter Entry	4-12
	PHA Spectrum Storage for a Preset Clock Time	4-14
	Multichannel Scaling	4-16
	Multichannel Scaling (Single Pass)	4-17
	Multichannel Scaling (Preset Recurrent Passes)	4-18
	Sequential Listing	4-20
	Data Subtraction	4-20
	Spectrum Comparison	4-21
	Spectrum Stripping	4-22
	Region of Interest Selection, Intensification, Totalization and Readout	4-24
	Display Expansion and Positioning	4-28
	Scroll Display	4-30
	Automatic Energy Calibration	4-32
	Auto Analysis	4-35
	Plotter Readout	4-39
	Calibration Procedure	4-40
	Readout Procedure	4-40
	Status Display Input/Output	4-41

CHAPTER	TITLE	PAGE
V	DATA MANIPULATION PACKAGE (47-0054).	5-1
VI	INTENSIFIED REGION PEAK EXTRACTION PACKAGE (47-0055).	6-1
VII	INTENSIFIED REGION ISOTOPE IDENTIFICATION PACKAGE (47-0056)	7-1
VIII	AUTOMATIC PEAK SEARCH PACKAGE (47-0057)	8-1
IX	AUTOMATIC ISOTOPE IDENTIFICATION PACKAGE (47-0058)	9-1
X	DIGITAL RATIOS PACKAGE (47-0071)	10-1
XI	SERIAL INPUT/OUTPUT INTERFACE (70-2437).	11-1
XII	PARALLEL INPUT/OUTPUT INTERFACE (70-2461)	12-1
XIII	7/9 TRACK MAGNETIC TAPE INTERFACE (70-2438)	13-1

CHAPTER I
INTRODUCTION

SYSTEM DESCRIPTION

The ND600 is a firmware controlled, microcomputer-based, multichannel analyzer system. It combines the operational convenience of a hardwired analyzer with the computational power of a completely firmware controlled LSI-11 microcomputer to produce an extremely powerful, yet easy to use multichannel data analysis system.

ND600 is packaged in two compact convenient units, representing a modern new approach in multichannel analyzer design and operational simplicity. One unit, the ND600 Terminal, is the system's display and operational control center. It contains a large, 6-inch x 8-inch, display CRT, a functionally grouped 44-pushbutton interactive keyboard and a four-wide NIM enclosure and power supply.

The built-in NIM enclosure and power supply houses and powers the analog to digital converter (ADC) module (an ND575 ADC is included with each system) and optional front end modules such as preamplifiers, amplifiers, discriminators or detector high voltage supplies.

The second unit, the ND600 Electronics Enclosure, is only five and one-quarter inches high and can be mounted in a 19-inch rack or used as a table-top pedestal for the terminal. It contains the LSI-11 I/O bus, two printed circuit board housings, each capable of accommodating up to six full-size plug-in boards, and the system power supplies. All other ND600 hardware and firmware is contained on printed circuit boards which plug into either of the board housings.

The front board housing accepts two full-size basic system boards and up to four full-size or eight-half-size optional boards. One of the basic system boards contains the LSI-11 microcomputer, 2K, 20-bits of data storage memory and 1K, 16-bits of scratch pad. The other basic system board contains the basic system firmware (preprogrammed ROM memory). Optional boards which can be plugged into the front board housing include a full-size RAM memory board for expanding data storage memory to up to 8K data channels, a variety of half-size boards for interfacing to input/output peripherals including high speed

paper tape punch/reader, line printer and serial devices such as Teletype, Terminal printer or RS-232 channel, and a second full-size ROM memory board for firmware options or peripheral drivers. All boards plugged into the front board housing connect to the common bidirectional data and control lines of the LSI-11 I/O Bus.

The rear board housing contains the Direct Memory Access (DMA) Controller and Keyboard Interface, the Acquisition Controller and DMA Interface, the Acquisition Interface and the Display Interface, all on full-size boards. The remaining space in the rear board housing is available for insertion of up to two additional full-size boards for interfacing to DMA peripheral options such as industry standard 7 or 9 magnetic tape. The DMA controller and keyboard interface connect to the common bidirectional data and control lines of the LSI-11 I/O Bus. The Acquisition, Display and any optional DMA peripheral interfaces access the LSI-11 I/O Bus using a true DMA priority scheme through the DMA controller.

SYSTEM SPECIFICATIONS

ND600 Terminal

CRT Parameters: Phosphor - Green, P-31. Display Face - Flat, rectangular (6-in. x 8-in. full screen).

Keyboard: 44-pushbuttons, arranged in four functionally grouped arrays (2 x 4, 4 x 4, 1 x 4 and 4 x 4).

NIM Enclosure Module Power Receptacles: Four Amp type 202516-3 connectors, wired in parallel.

NIM Enclosure Power Supply: +12 Vdc @ 2A. -12 Vdc @ 1A. $\pm$24 Vdc @ 250 mA.

Dimensions (overall): 15.3-in. h. X 18.5-in. w. X 25-in. d.

Weight: 65 lbs.

Operating Temperature Range: 10 to 40°C.

Power Requirements: 115 Vac $\pm$ 10%, 50/60 Hz, Single Phase, 200 W, max. (Strapping for 230 Vac, available on request.)

ND600 Electronics Enclosure

LSI-11 I/O Bus: Asynchronous, bidirectional bus with common interface connections between LSI-11 microcomputer and system component boards for 16 multiplexed data/address lines, 18 control/synchronization signal lines and power distribution from the system power supplies. Bus supports both vectored interrupts without polling and priority DMA structured I/O with highest priority assigned to device electronically closest to LSI-11.

Mechanical: Front and back printed circuit board housings, each capable of accommodating six full-size (8.5-in. x 10.5-in.) system component boards.

System Power Supplies: +5 Vdc @ 25 A. ±12 Vdc @ 2.5 A. ±15 Vdc @ 200 mA.

Dimensions: 5.25-in. h. x 19-in. w. x 23-in. d.

Weight: 65 lbs.

Operating Temperature Range: 10 to 40°C.

Power Requirements: 115 Vac ± 10%, 50/60 Hz, Single Phase, 350 W, max. (Strapping for 230 Vac, available on request.)

Data Storage Memory

Number of Channels: 2048, 4096 or 8192; field expandable from 2K to 4K to 8K.

Count Capacity per Channel: $2^{20}-1$ (1,048,575) plus 4 flag bits.

Type: Solid state, random access.

Cycle Time: 960 nsec.

Refresh Cycle: Every 25 μsec. Complete memory refresh in 1.6 msec.

Arithmetic: Add or subtract.

Storage Group Size: Selectable in binary increments from 32 channels to full memory.

Data Acquisition

Acquisition Modes: PHA, MCS or List.

Acquisition Control: Automatic termination upon reaching preset live or clock time (preset number of passes in MCS), preset count level in any channel or preset count total between markers.

Preset Time (Pass) Selection: 1 to 6,553,500 sec (65,535 passes).

Preset Level Selection: 1 to 1,048,575 counts.

Preset Total Selection: 1 to 4,294,967,295 counts.

ADC Digital Offset: Selectable from 0 to 8191 channels.

Digital Ratemeter: Automatic computation and display of input count rate between markers during PHA acquisition.

MCS Count Rate: 100 KHz, max.

Dwell Time Selection: 10 μsec to 900 sec in decade increments.

MCS Count Input: Pulse Amplitude - +2.4 to +5 V. Duration - 30 nsec, min. Input Impedance - 75 ohms.

Pass Initiation: Single or repetitive triggering.

External Sweep Trigger Input: Pulse Amplitude - + 3 to 0 V, with sweep start occurring on negative transition of pulse. Duration - 0.5 μsec, min. Input Impedance - 1000 ohms.

External MCS Time Base Input: Pulse Amplitude - +2.4 to +5 V, with clock occurring on positive transition of pulse. Duration - 0.5 μsec, min. Pulse repetition rate - 100 kHz, max.

List Word Size: Up to 12 bits.

List Data Rate: 100 kHz, max.

Auto Job Mode: Permits entry of a sequence of up to eight operations and automatically repeating the sequence from 1 to 65,535 times.

Data Display

Display Rate: 100 kHz.

Display Presentation: Linear or logarithmic.

Display Group Size: Selectable in binary increments from 32 channels to full memory.

Counts Full Scale: Selectable from 32 to 1,048,575 in binary increments.

Display Resolution: One part in 1024 (10-bits) for both X and Y axes.

Display Linearity: ±2%.

Analog Display Output: X-Y Axes - 0 to 4V. Blanking - 0V to +5V (blank to normal).

Display Expansion: Digital selection of any segment of channels for expanded display.

Alphanumeric Character Display: Internal circuitry permits generation of 64 ASCII characters for display.

Display Overlap: Spectral data in up to four selected memory groups can be overlapped and displayed at fixed vertical displacements (stacked) or with a common baseline (superimposed).

Region of Interest Identification: Dual (left and right) channel markers permit selection of any region of interest. Display intensification permits identification of multiple regions of interest.

X-Y Plotter Control: Internal Circuitry with external connections permits analog readout of entire display (including alphanumeric characters) to an X-Y Plotter.

Numeric Readout Mode: Permits statically displaying the contents of up to 56 channels, starting with the left marker channel or the channel contents or count totals in up to 12 consecutive intensified regions.

Spectrum Strip Mode: Permits multiplying a selected memory group by a specified strip factor and adding it to, or subtracting it from, the current display group.

Data Input/Output Peripheral Interface Options

Serial Devices (Teletype, Terminal Printer, RS-232 Channel, etc.):

Communications: 20 mA current loop or EIA RS-232.
Transmission Code: ASCII or ND Binary.
Transmission Rate: Selectable from 110 to 9600 baud, depending on device.

High Speed Paper Tape Punch/Reader:

Input/Output Code: 8 level ASCII or ND Binary.
Input Rate: 200 or 300 char/sec, depending on device.
Output Rate: 75 char/sec.

Line Printer:

Printing Method: Impact, character-by-character, one line at a time.
Printing Rate: 100 char/sec.
Character Structure: 5 x 7 dot matrix, 10-point type equivalent.
Code: ASCII, 64 printing characters.
Format: 80 char/line. 6 lines/inch.

Industry Standard Magnetic Tape:

Number of Tracks: 9 or 7-track, IBM compatible.
Data Density: 9-track at 800 bpi. 7-track at 800/556 bpi.
Tape Velocity: 25 or 45 ips.
Reel Size: 7-in. on 25 ips units; 10.5 in. on 45 ips units.
Tape (Computer Grade): 0.5-in. wide, 1.5 mil thick.
Tape Labelling: In accordance with ANSI STANDARD ANSI X3.27-1969.

Operational Function Firmware Option Packages

Data Manipulation Package (47-0054)

Performs the following functions: integration, differentiation, addition of a constant to, or subtraction of a constant from the data spectrum, data transfer, data smooth (five-point), square root calculation, and relative error calculation.

Intensified Region Peak Extraction Package (47-0055)

Determines the peak channel, FWHM and intensity information for each region of interest identified by intensified display. Upon determining the peak in each region, the following information is provided: peak channel energy, FWHM in energy, net area, background, peak-to-background ratio, left and right region limits, and statistical error.

Intensified Region Isotope Identification Package (47-0056)

Provides a report identifying the isotope, half-life, energy and percent abundance for each peak determined during the intensified region peak extraction process. Each isotope is identified on the basis of finding an energy line which corresponds to an isotope in the isotope library.

Automatic Peak Search Package (47-0057)

Automatically determines the centroid, FWHM and intensity information for each peak in the marker defined portion of the data spectrum. Upon determining each peak, the following information is provided: peak centroid energy, FWHM in energy, net area, background, peak-to-background ratio, left and right peak limits, and statistical error.

Automatic Isotope Identification Package (47-0058)

Provides a report identifying the isotope, half-life, decay, energy, percent abundance, percent efficiency and activity for each peak determined during the automatic peak search process which corresponds to an energy line of an isotope in the isotope library.

Digital Ratio Package (47-0071)

Permits monitoring up to 12 digital ratios between net areas, gross areas or combinations of net and gross areas in overlapping or non-overlapping regions in any memory group. The net or gross area of any region bracketed by left and right markers can be specified as either the numerator or denominator for any of the 12 digital ratios. The ratios are dynamically computed for monitoring live during data acquisitions. The package also permits generating a summary report at an optional hardcopy peripheral device.

CHAPTER II
INSTALLATION

GENERAL

The user should familiarize himself with the information contained in this section before attempting to install or operate the ND600 System.

UNPACKING AND INSPECTION

Carefully unpack the ND600 Electronics Enclosure, ND600 Terminal and peripherals, saving the shipping cartons for possible re-shipment. Refer to the instruction manuals on the respective peripherals for specific information relating to unpacking and inspecting these units. Carefully examine each unit for possible damage to controls, indicators and connectors. If damage incurred during transit is apparent, notify the delivering carrier and then notify the nearest Nuclear Data representative, or the Nuclear Data home office.

NOTE: The delivering carrier must be notified within 24 hours after receipt of the equipment to insure reimbursement for any damage incurred during transit.

ND600 Electronics Enclosure

Remove the front panel, top and rear cover retaining screws, remove front panel, top and rear covers and examine each plug-in system component board installed in the ND600 Electronic Enclosure for damage. If no damage is apparent, carefully push-in on each circuit board and interboard connector to ensure proper contact between the board/chassis connector and cable connector/board connector which may have shaken loose during transit. Leave front panel, top and rear covers off the unit until installation and interconnection procedures are completed.

ND600 Terminal

Remove the retaining screws (two at the bottom front and two at the rear) holding the top to the base of the ND600 Terminal, carefully pull forward on the top and lift it off the base. Be careful not to damage the cable which extends through the cable slot at the rear of the

ND600 Terminal and attaches to the Keyboard by allowing the cable sufficient slack to slide through the cable slot when lifting the top from the base. With the top of the ND600 Terminal removed, examine the internal circuitry for damage. If no damage is apparent, carefully push-in each internal circuit board and interconnecting cable connector (including the one attached to the keyboard) to ensure they are properly seated. If any ADC's are to be installed in the ND600 Terminal, leave the top off the base until the ADC installation is completed. If not, carefully replace the top of the base, pulling the slack in the keyboard cable through the cable slot, and replace the four retaining screws.

VENTILLATION

Locate the ND600 Electronics Enclosure so that there is free air space at the sides and rear of the unit. The ND600 Electronic Enclosure is equipped with cooling fans; however, if it is totally enclosed in an unventilated area, there will be insufficient heat dissipation which will result in damage to the unit.

CAUTION: Do not operate the ND600 Electronics Enclosure without the front panel, top and rear covers installed as this will hamper operation of the cooling fans and result in damage to the unit.

If the ND600 Electronics Enclosure is mounted with other units in an enclosed rack type cabinet, forced air cooling may be required. When possible those units with high heat dissipation should be mounted at the top of the cabinet.

POWER SOURCE

The ND600 System requires a 115 Vac (strapping for 230 Vac is available on request), 60/50 Hz source which is free of excessive noise or fluctuations. A voltage stabilizing transformer can be inserted between the ac source and the ND600 System where available power is subject to large fluctuations. Noise produced by various types of electrical equipment can be eliminated or greatly reduced by connecting a suitable filter between the ac source and the interfering equipment.

ADC INSTALLATION

With the top removed from the base of the ND600 Terminal, install an ADC module into its 4-wide NIM enclosure as follows:

NOTE: One ADC module is normally supplied with, and installed in the ND600 Terminal at the factory prior to shipment of the system. However, if the ADC module is ordered separately, the following installation procedure must be performed.

1. Insert the ADC module into the 4-wide NIM enclosure of the ND600 Terminal in such a manner as to mate the 42-pin male power connector on the rear of the module with a 42-pin female power connector at the rear of the 4-wide NIM enclosure.

2. Fasten the ADC module to the front of the 4-wide NIM enclosure with the two retaining screws on the module front panel.

3. Lead the 26-pin female connector on the ribbon cable extending from the rear of the ADC module through the cable slot located at the bottom rear of the terminal base, pulling the slack in the ADC cable through the cable slot.

4. After completing installation of the ADC module, replace the top of the ND600 Terminal on the base, pulling the slack in the keyboard cable through the cable slot and replace the four retaining screws.

OPTIONAL SYSTEM COMPONENT BOARD INSTALLATION

If an optional system component board (additional memory, firmware option or input/output peripheral interface option) is ordered with the system, it is normally installed in the ND600 Electronics Enclosure prior to shipment from the factory. However, if the optional system component board is ordered separately, it is necessary to install it into an available connector in the ND600 Electronics Enclosure.

1. Insert the system component board into an available connector in the ND600 Electronics Enclosure such that the component side of the board being inserted is at the top.

2. Connect any interface cables which are provided for interconnecting to an optional module or peripheral to the system component board.

NOTE: To insure proper interconnection between the system component boards and any associated peripherals, refer to the appropriate installation procedure outlined in the corresponding chapters of this instruction manual.

SYSTEM INTERCONNECTIONS

The basic ND600 System consists of two units, the ND600 Electronics Enclosure and the ND600 Terminal. All ND600 System Component Boards plug into either the front or rear board housing of the ND600 Electronics Enclosure. Basic system component boards to which external connection is required include the DMA board, DMB board and ACX (or ACT) board, each of which is installed in the rear board housing of the ND600 Electronics Enclosure. The Terminal keyboard is interconnected to the DMA board. The Terminal display is interconnected to the DMB Board. The analog to digital converter (ADC) module is interconnected to the ACX (or ACT) board.

Installation procedures for interconnecting the ND600 Terminal, ADC module and optional X-Y plotter to the appropriate ND600 System Component Boards installed in the ND600 Electronics Enclosure are provided in the following paragraphs. Installation Procedures for firmware options or input/output peripheral interface options are provided in the corresponding chapters of this instruction manual.

ND600 Terminal Installation

1. Locate the ND600 Terminal on top or adjacent to the ND600 Electronics Enclosure (or adjacent to the cabinet in which the ND600 Electronics Enclosure is installed).

NOTE: The interconnecting cables between the ND600 Terminal Keyboard and the ADC module (installed in the ND600 Terminal 4-wide NIM enclosure) are normally connected internally to the ND600 Terminal and lead through the cable slot at the bottom rear of the terminal base prior to shipment from the factory.

2. Interconnect the ND600 Terminal Keyboard to the DMA board installed in the rear board housing of the ND600 Electronics Enclosure by inserting the 20-pin female connector on one of the ribbon cables extending from the cable slot at the bottom rear of the ND600 Terminal into the 20-pin male connector on the DMA board (rear center connector, component side, viewing the ND600 Electronics Enclosure from the rear) such that the color mark on the ribbon cable is at the right.

3. Interconnect the ADC module installed in the ND600 Terminal 4-wide NIM enclosure to the ACX board installed in the rear board housing of the ND600 Electronics Enclosure by inserting the 26-pin female connector (designated ADC) on one of the ribbon cables extending from the cable slot at the bottom rear of the ND600 Terminal into the 26-pin male connector (designated ADC) on the ACX (or ACT) board such that the color mark on the ribbon cable is at the right.

4. Connect the display interface ribbon cable (contains a 26-pin female connector on one end and a 25-pin male connector on the other end) between ND600 Terminal and the DMB board installed in the rear board housing of the ND600 Electronics Enclosure as follows:

NOTE: If an X-Y Plotter is ordered with the ND600 System, the display interface ribbon cable is replaced by a display/plotter interface ribbon cable which permits interconnecting both the ND600 Terminal Display and the X-Y Plotter to the ND600 Electronics Enclosure. Refer to the X-Y Plotter Interconnection procedure.

a. Insert the 26-pin female connector on the ribbon cable into the 26-pin male connector (designated DISPLAY) on the DMB board (rear center connector, component side, viewing the ND600 Electronics Enclosure from rear) such that the color mark on the ribbon cable is at the right.

b. Insert the 25-pin male connector on the ribbon cable into the 25-pin female connector (designated DISP IN) at the right rear of the ND600 Terminal.

5. Connect an ac line cord from the ac line receptacle (designated AC INPUT) on the rear of the ND600 Terminal to a conveniently located 115 Vac outlet.

X-Y Plotter Interconnection

If an optional X-Y Plotter was ordered with the ND600 System, interconnect it to the ND600 Electronics Enclosure as follows:

1. Remove the display interface ribbon cable (installed in step 4 of the ND600 Terminal Installation procedure) and connect the display/plotter interface ribbon cable (contains a 26-pin female connector on one end, a 25-pin male connector in the middle and another 25-pin male connector at the other end) between the ND600 Terminal, X-Y Plotter and the DMB board installed in the rear board housing of the ND600 Electronics Enclosure as follows:

a. Insert the 26-pin female connector on the ribbon cable into the 26-pin male connector (designated DISPLAY) on the DMB board (rear center connector, component side, viewing the ND600 Electronics Enclosure from the rear) such that the color mark on the ribbon cable is at the right.

b. Insert one of the 25-pin male connectors on the ribbon cable into the 25-pin female connector (designated DISP IN) of the right rear of the ND600 Terminal.

c. Insert the other 25-pin male connector on the ribbon cable into the 25-pin female connector on the bottom front of the X-Y Plotter.

2. Connect the ac line cord supplied with the X-Y Plotter from the ac line receptacle on the bottom front of the X-Y plotter to a conveniently located 115 Vac outlet.

NOTE: The X-Y Plotter must be calibrated for proper operation with the ND600 System. Refer to Chapter IV for the X-Y Plotter Calibration procedure.

Power Connection

After completing system installation, replace the front panel, top and rear covers of the ND600 Electronics Enclosures, and connect an ac line cord from the ac line receptacle on the rear of the ND600 Electronics Enclosure to a conveniently located 115 Vac outlet.

CAUTION: Do not operate the ND600 System without the front panel, top and rear covers installed as this will hamper operation of the cooling fans and may result in damage to the unit.

CHAPTER III
CONTROL, INDICATOR AND CONNECTOR DESCRIPTIONS

GENERAL

This section contains detailed descriptions of the controls, indicators and connectors on the ND600 Terminal and the ND600 Electronics Enclosure.

ND600 TERMINAL ALPHANUMERIC STATUS DISPLAY

ND600 displays anyone of four separate pages of alphanumeric data simultaneously with spectral data at a fast, flickerfree 100 kHz rate. Each page contains parameter data pertinent to basic operational functions of the ND600. Page 1 contains the parameters normally associated with visually monitoring spectral data. Page 2 contains the parameters relating to set-up and performance of data acquisition. Page 3 contains the data manipulation parameters. Page 4 contains the parameters available for set-up of an auto job sequence.

Parameter data which varies with operational functions, such as elapsed time, channel contents or count totals, is periodically updated by the system. Parameter data which is user selected, such as an operational mode, numerical value or mathematical manipulation, is altered by positioning the display cursor to the desired parameter and then entering the new parameter data at the operand pushbutton array, or by sequencing to the desired parameter entry via the NXTV pushbutton.

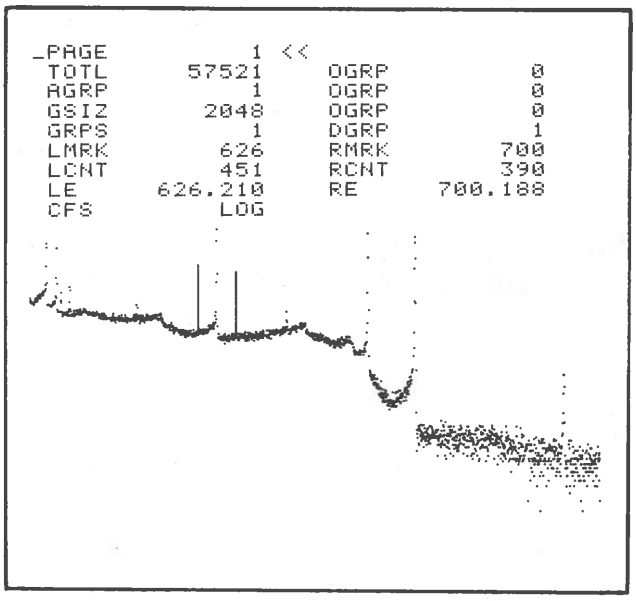

PAGE 1 – Display Parameters

TOTL	Total counts between markers, including left, excluding right marker channel.	OGRP	Overlap group numbers.
AGRP	Current acquire group number.	OGRP	
GSIZ	Current group size, i.e. number of channels/group (Note 1).	OGRP	
GRPS	Number of groups (Note 2).	DGRP	Current display group number.
LMRK	Left marker channel number.	RMRK	Right marker channel number.
LCNT	Left marker channel content.	RCNT	Right marker channel content.
LE	Left marker channel energy.	RE	Right marker channel energy.
CFS	Current counts full scale value.		

NOTE 1: The group size (GSIZ) is in binary increments from 32 to 8192 channels depending upon system memory configuration. If the number of channels entered for the GSIZ parameter is not an integer binary multiple, it is rounded up to the next available integer binary multiple. For example, if 1000 were entered for the GSIZ parameter, it would be rounded to 1024.

NOTE 2: The number of groups (GRPS) is in binary increments from 1 to 256 groups depending upon system memory configuration. GSIZ X GRPS = number of channels in the system memory configuration (2048, 4096, or 8192). If the number of groups entered for the GRPS parameter is not an integer binary multiple, it is rounded up to the next available integer binary multiple. For example, if 7 were entered for the GRPS parameter, it would be rounded to 8.

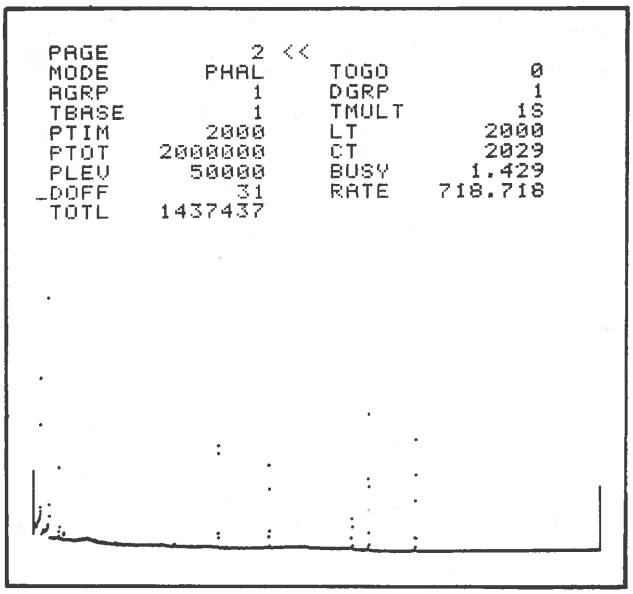

PAGE 2 — Data Acquisition Parameters

MODE Current data acquisition mode.
- PHAC PHA clock time mode.
- PHAL PHA live time mode.
- MCS Multichannel scaling mode.
- LIST List Mode.

TOGO Preset time remaining in PHAC or PHAL modes; preset number of passes remaining in MCS mode.

AGRP Current acquire group number.

DGRP Current display group number.

TBASE Time base (1 to 9). TBASE X TMULT = MCS dwell time.

TMULT Time multiplier (10 µsec to 100 sec, 1 min or External).

PTIM Preset time for PHAC or PHAL modes; preset number of passes for MCS mode (1 to 65K). 65535 PTIM X TMULT = PHA preset time.

LT Current elapsed live time in time units entered for TMULT.

PTOT Preset total counts between markers for terminating data acquisition (1 to 4 billion). $2_1 \cdot 10^9$

CT Current elapsed clock time in time units entered for TMULT.

PLEV Preset level (counts) in any channel for terminating acquisition (1 to 1 million).

BUSY System busy status in percent.

DOFF ADC digital offset (0 to 8K channels).

RATE Effective input count rate between markers.

TOTL Total counts between markers, including left, excluding right marker channel.

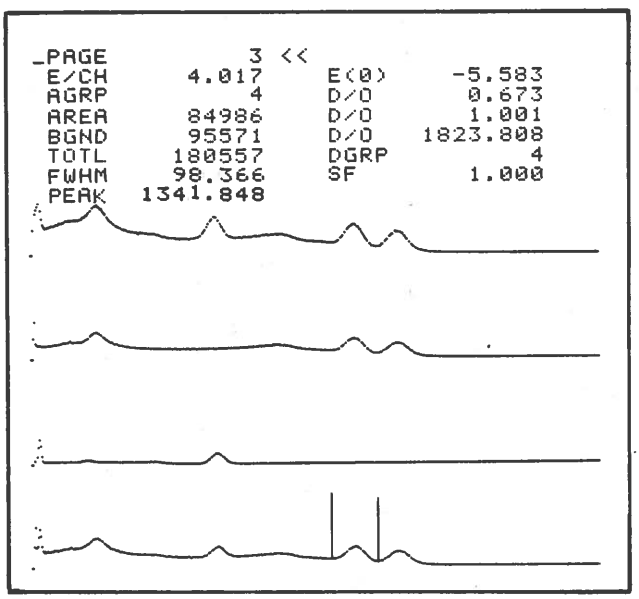

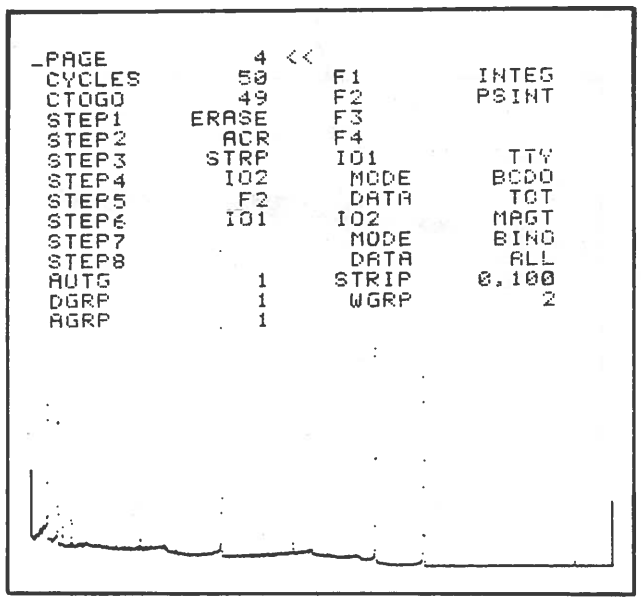

PAGE 3 – Data Manipulation Parameters

E/CH — Calibrated energy per channel.

AGRP — Current acquire group number.

AREA — Net area (total counts minus background counts) between markers.

BGND — Background counts between markers.

TOTL — Total counts between markers, including left, excluding right marker channel.

FWHM — Full width at half maximum value in energy.

PEAK — Peak channel between markers in energy.

E(0) — Calibrated energy offset.

D/O — Ratio(s) of gross counts between markers in current display group and respective overlap group(s).

D/O — Ratio(s) of net counts (total minus background) between markers in current display group and respective overlap group(s) is obtained by depressing the minus(-) pushbutton

D/O — at the operand pushbutton array and then the AREA BGND pushbutton.

DGRP — Current display group number.

SF — Strip factor for spectrum stripping operation performed by depressing STRIP pushbutton.

PAGE 4 — Auto Job Parameters

CYCLES — Preset number of auto job cycles (1 to 65K)

CTOGO — Preset number of auto job cycles remaining.

STEP1, STEP2, STEP3, STEP4, STEP5, STEP6, STEP7, STEP8 — Operations performed in steps 1 to 8 of auto job sequence.

- ERASE — Erase operation.
- ACR — Acquire operation.
- STRP — Strip operation.
- PLOT — Plot operation.
- NXTG — Increment AUTG by 1.
- F1, F2, F3, F4 — Operational function specified for F1, F2, F3 or F4.
- IO1, IO2 — Input/output operation specified for IO1 or IO2.

AUTG — Current auto group number.

DGRP — Current display group number.

AGRP — Current acquire group number.

F1, F2, F3, F4 — Optional firmware controlled operational functions which are performed when F1, F2, F3 or F4 pushbutton is depressed, or when specified as steps in an auto job sequence.

- INTEG
- DIFF
- PSRCH
- Etc.

IO1, IO2 — Optional input/output devices used for data input/output when IO1 or IO2 pushbutton is depressed, or when IO1 or IO2 operation is specified as a step in an auto job sequence.

- TTY — Teletype.
- MAGT — 7 of 9-track magnetic tape.
- LP — Line Printer.
- PT — High speed paper tape reader/punch.
- SU1, SU2, SU3 — Available for future special units, such as SDCC, etc.

MODE — Input/output mode (IO1 or IO2).

- BCDI — BCD formatted input.
- BCDO — BCD formatted output.
- BINI — Binary formatted input.
- BINO — Binary formatted output.

DATA — Input/output data (IO1 or IO2).

- ALL — Content of all channels in group.
- MRKR — Content of channels between markers.
- ROI — Content of channels in intensified regions.
- TOT — Intensified region count totals.
- STAT — Current status page.

STRIP — Auto job additive (+) or subtractive (-) spectrum strip mode and factor.

WGRP — Work group for auto job spectrum strip operation.

WGRP: WGRP X ($\pm$ STRIP) + AUTG ➔ AUTG

-WGRP: AUTG X ($\mp$ STRIP) + WGRP ➔ WGRP

ND600 TERMINAL PUSHBUTTON KEYBOARD

The ND600 Terminal's 44-pushbutton interactive keyboard is functionally grouped for ease of operation. Eight Display pushbuttons control data display. 16 Function pushbuttons allows selection of data acquisition, manipulation and input/output functions. Four Status pushbuttons select and control status display. 16 Operand pushbuttons permit numerical entry, mode selection and mathematical manipulation.

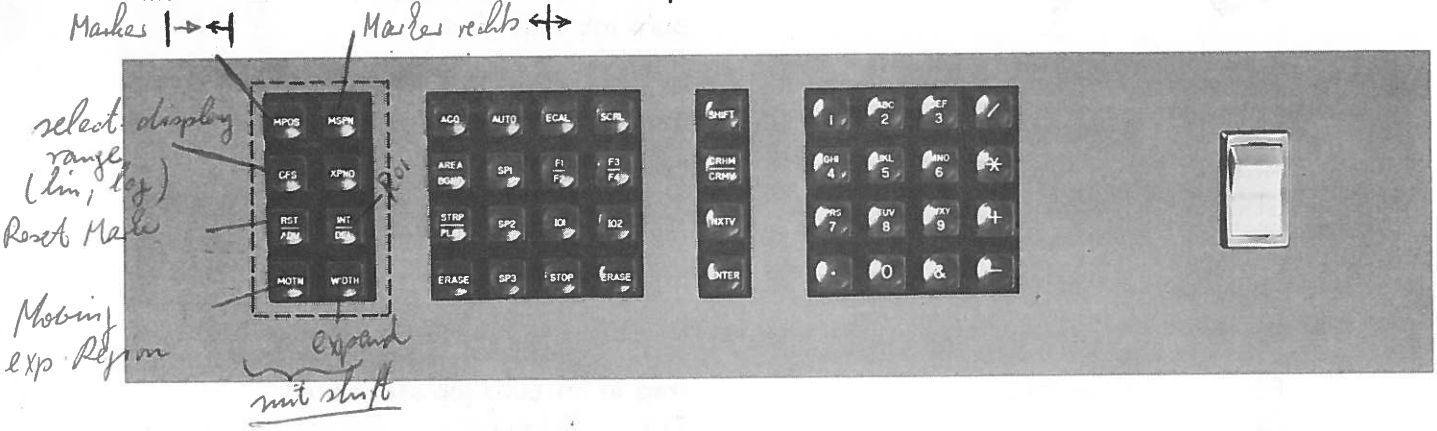

Display Pushbuttons

MPOS — The MPOS pushbutton permits moving the left and right markers (vertical lines imposed upon the spectrum display) to the left or right on the display. Holding the MPOS pushbutton depressed moves the left and right markers in the direction selected by the SHIFT pushbutton. The rate of movement is a function of the length of time the MPOS pushbutton is held depressed. However, a momentary depression will only move the left and right markers one channel. The left and right marker channel numbers, contents and energies are displayed on Status Page 1.

MSPN — The MSPN pushbutton permits moving the right marker to the left or right on the display, decreasing or increasing the number of channels between the left and right markers. Holding the MSPN pushbutton depressed moves the right marker in the direction specified by the SHIFT pushbutton. The rate of movement is a function of the length of time the MSPN pushbutton is held depressed. However, a momentary depression will only move the right marker one channel.

CFS — The CFS pushbutton permits selecting the linear display range (counts full scale) or logarithmic display. Depressing the CFS pushbutton increases the counts full scale value by a factor of two when the right (>>) direction is selected by the SHIFT pushbutton, or decreases the counts full scale by a factor of two when the left (<<) direction is selected by the SHIFT pushbutton. The range of counts full scale values is from 32 to 1M in binary increments. Logarithmic display is selected by depressing the CFS pushbutton after the minimum counts full scale value (32) is reached when the left (<<) direction is selected by the SHIFT pushbutton, or after the maximum counts full scale value (1M) is reached when the right (>>) direction is selected by the SHIFT pushbutton.

XPND — Depressing the XPND pushbutton expands the display defined by the left and right markers to horizontal full scale. Once expanded, the display can be returned to normal (display of the full group) by depressing the XPND pushbutton a second time.

RST — Depressing the RST/ADV pushbutton when the right (>>) direction is selected by the SHIFT pushbutton, resets the markers to the first and last channels of the current display group.

ADV — Depressing the RST/ADV pushbutton when the left (<<) direction is selected by the SHIFT pushbutton sequentially advances the markers to the next assigned region of interest to the right on the display. After the last assigned region of interest on the right selection reverts to the first assigned region on the left of the display.

INT — Depressing the INT/DEL pushbutton when the right (>>) direction is selected by the SHIFT pushbutton enters the channels between the left and right markers as an assigned regions of interest and intensifies the display of the marker defined channels, including left, excluding right marker channel.

DEL — Depressing the INT/DEL pushbutton when the left (<<) direction is selected by the SHIFT pushbutton deletes any previously assigned region(s) or portions of a region between the left and right markers and clears the intensified display between the left and right markers.

MOTN — The MOTN pushbutton permits moving the expanded display to the right or left. Holding the MOTN pushbutton depressed moves the expanded display horizontally in the direction specified by the SHIFT pushbutton. The rate of movement is a function of the length of time the MOTN pushbutton is held depressed. However, a momentary depression will only move the expanded segment one channel.

WIDTH — The WIDTH pushbutton permits horizontally expanding or contracting the display. Holding the WIDTH pushbutton depressed horizontally contracts the display when the left (<<) direction is selected by the SHIFT pushbutton, or horizontally expands the display when the right (>>) direction is selected by the SHIFT pushbutton. Horizontal expansion increases the spacing between channels, causing the number of channels displayed to decrease, while horizontal contraction decreases the spacing between channels, causing the number of channels displayed to increase. The rate of expansion or contraction is a function of the length of time the WIDTH pushbutton is held depressed. However, a momentary depression will only expand or contract the display by one channel.

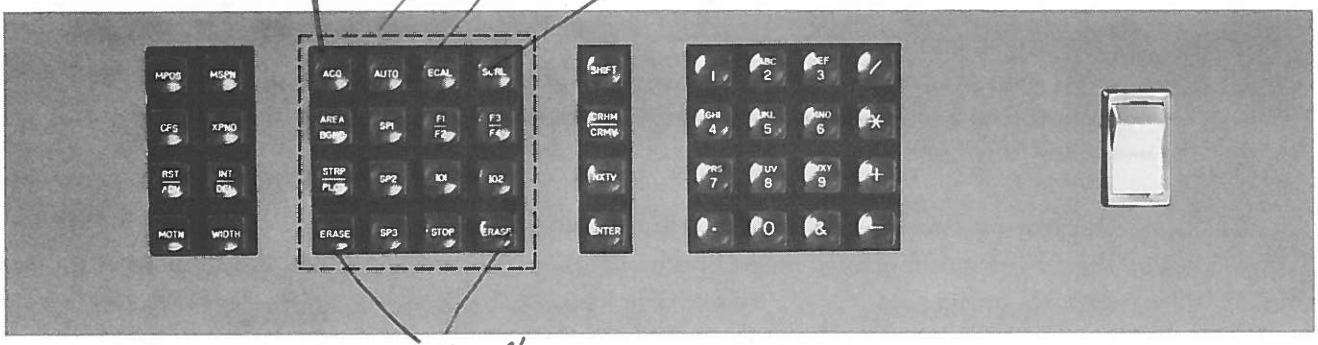

Function Pushbuttons

ACQ — Alternately starts, pauses or stops data acquisition in the selected mode. Depressing the ACQ pushbutton once starts data acquisition. Depressing the ACQ pushbutton a second time pauses data acquisition, allowing it to continue when the ACQ pushbutton is depressed a third time. During the time data acquisition is in progress, the letter "A" is flashed on the display. When data acquisition is paused, depressing the minus (-) pushbutton at the operand pushbutton array and then the ACQ pushbutton stops data acquisition. Data acquisition can be preset to stop automatically after reaching a preset live or clock time (preset number of passes in MCS), after reaching a preset count total in the channels between the markers, or after reaching a preset count level in any channel. ADC digital offset from 0 to 8191 channels may also be selected for PHA acquisition. The desired acquisition mode, PHA preset time (MCS passes), preset count total, preset count level, digital offset, and MCS dwell time are entered via the operand pushbutton array and displayed as acquisition parameters (Status Page 2). During PHA acquisition, the system automatically computes and displays the elapsed live and clock times, the preset time (passes) remaining, the count total and effective count rate in the channels between the markers, and the system busy status in percent.

AUTO — Initiates the preselected auto job sequence. Depressing the AUTO pushbutton initiates the sequence of up to eight auto job operations and automatically repeats the sequence the specified number of times. Entering a group number at the operand pushbutton array and then depressing the AUTO pushbutton sets the auto group (group in which the auto job operations are performed) to the group number entered and then initiates the sequence of auto job operations. The auto job is terminated upon completion of the last operation of the last specified auto job cycle or when the STOP pushbutton is depressed. Operations which can be included in the sequence are erase, acquire, spectrum strip, plot, next group, any of the four operational functions or the input/output operations. The auto group, strip factor, work group, the operational functions, erase, acquire, spectrum strip, plot, next group and input/output operations and the preset number of auto job cycles are entered via the operand pushbutton array and displayed as auto job parameters (Status Page 4). During auto job, the preset number of cycles remaining is displayed as an auto job parameter (Status Page 4).

ECAL

Selects energy calibrate mode permitting entry of the known energies for two known reference energy peaks. Depressing the ECAL enters the energy calibrate mode as indicated by the letter "E" being Flashed on the display. In this mode, energy calibration is performed as follows:

1. Select Status Page 1 and position the left and right markers at the respective low and high reference energy peaks.

2. Position the display cursor at the LE parameter, enter the known low energy value at the operand pushbutton array and depress the ENTER pushbutton.

3. Position the display cursor at the RE parameter, enter the known high energy value at the operand pushbutton array and depress the ENTER pushbutton.

4. Exit the energy calibrate mode by depressing the ECAL pushbutton a second time. This removes the flashing "E" from the display, causes system to compute the energy per channel (slope) and zero energy intercept (offset), and updates the display of the E/CH and E(0) parameters (Status Page 3) to the respective computed values.

SCRL

Depressing the SCRL pushbutton statically displays the numeric content of up to 56 channels, starting with the left marker channel; the content of the channels in up to six consecutive intensified regions within the current marker defined portion of the spectrum; or the count totals of up to 12 consecutive intensified regions within the current marker defined portion of the spectrum. All channels, intensified region channels or intensified region totals are specified by selecting ALL, ROI or TOT, respectively, as the DATA parameter for IO1 (Status Page 4). The numeric display is updated as the markers are moved to select another portion of the spectrum or during data acquisition when channel contents and region totals are changing. Spectral data display simultaneous with numeric Scroll display can be selected by momentarily depressing the WIDTH pushbutton. Scroll display is terminated by depressing the SCRL pushbutton a second time.

AREA BGND

Depressing the AREA BGND pushbutton computes the net area (total counts minus background counts), background counts, FWHM energy, and peak channel energy between the left and right markers and displays these values for the AREA, BGND, FWHM and PEAK parameters, respectively (Status Page 3). Depressing the minus (-) pushbutton at the operand pushbutton array and then the AREA BGND pushbutton computes the ratio(s) of the net counts (total counts minus background counts) between the markers in the current display group and the respective overlap group(s) and displays the value(s) for the respective D/O parameter(s) (Status Page 3).

SP1, SP2, SP3 — Spare pushbuttons available for future operational functions.

F1/F2, F3/F4 — Depressing the F1/F2 or F3/F4 pushbutton when the right (>>) direction is selected by the SHIFT pushbutton performs the operational functions specified for the F1 or F3 parameter (Status Page 4), respectively. Depressing the F1/F2 or F3/F4 pushbutton when the left (<<) direction is selected by the SHIFT pushbutton performs the operational function specified for the F2 or F4 parameter (Status Page 4), respectively.

NOTE: Pushbuttons F1/F2 and F3/F4 are only operational when one or more of the firmware option packages are ordered with the system and an operational function contained in these packages is specified for the respective F1, F2, F3 or F4 parameter (Status Page 4).

STRP — Multiplies a selected group by the strip factor (SF) and adds it to, or subtracts it from the current display group. The strip factor (SF) is entered via the operation pushbutton array and displayed as a data manipulation parameter (Status Page 3). Entering a group number at the operand pushbutton array and then depressing the STRP/PLOT pushbutton when the right (>>) direction is selected by the SHIFT pushbutton, multiplies the selected group by the strip factor and adds it to the current display group. Depressing the minus (-) pushbutton prior to entering a group number at the operand pushbutton array and then depressing the STRP/PLOT pushbutton when the right (>>) direction is selected by the SHIFT pushbutton, multiplies the selected group by the strip factor and subtracts it from the current display group.

PLOT — Depressing the STRP/PLOT pushbutton when the left (<<) direction is selected by the SHIFT pushbutton, plots the current spectral data display and the current alphanumeric parameter display (current status page or scroll data) at the X-Y plotter. Output to the X-Y plotter is terminated by depressing the STRP/PLOT pushbutton a second time when the left (<<) direction is selected by the SHIFT pushbutton. Depressing the minus (-) pushbutton at the operand pushbutton array and then the STRP/PLOT pushbutton when the left (<<) direction is selected by the SHIFT pushbutton, alternately displays and supplies a (0,0) and full scale (X,Y) point for plotter calibration. Output of the plotter calibration points is terminated by depressing the STRP/PLOT pushbutton a second time when the left (<<) direction is selected by the SHIFT pushbutton.

IO1, IO2 — Depressing the IO1 or IO2 pushbutton performs the selected data input/output operation at the input/output device specified for IO1 or IO2, respectively. The input/output device, input/output mode and input/output data for IO1 and IO2 are entered via the operand pushbutton array or selected via the NXTV pushbutton as auto analysis parameters (Status Page 4).

NOTE: Pushbuttons IO1 and IO2 are only operational when one or more input/output peripheral interface option is ordered with the system and the desired input/output device, mode and data is specified for the IO1 or IO2 parameter (Status Page 4). If no I/O device is specified when the IO1 or IO2 pushbutton is depressed, the selected data input/output operation defaults to the ND600 Terminal operand pushbutton array/CRT display.

ERASE — Simultaneously depressing both ERASE pushbuttons clears all channels of the current display group.

STOP — Depressing the STOP pushbutton terminates auto analysis or any input/output operation currently in progress.

NOTE: Depressing the STOP pushbutton does not terminate data acquisition.

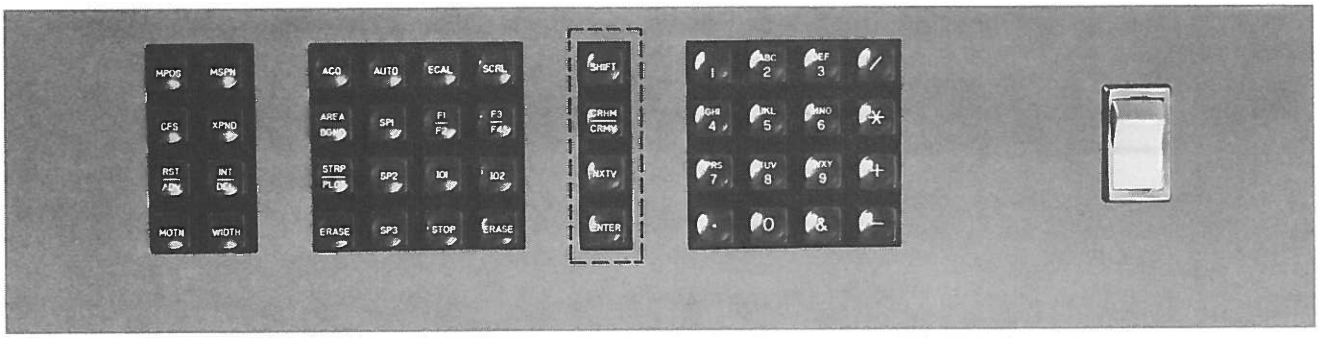

Status Pushbuttons

SHIFT — Depressing the SHIFT pushbutton alternately selects display of a double left (<<)/right (>>) caret (one flashing, one static) to specify the lower/upper function of a dual function pushbutton, or to specify the direction of display parameter movement (left, decrease or contract/right, increase or expand).

CRSR — Depressing the CRSR pushbutton when the right (>>) direction is selected by the SHIFT pushbutton, moves the display cursor to the next status parameter to the left or up, line by line. After the first parameter (PAGE) of the currently displayed status page is selected, selection reverts to the last parameter. Depressing the CRSR pushbutton, when the left (<<) direction is selected by the SHIFT pushbutton, moves the display cursor to the next status parameter to the right or down, line by line. After the last parameter of the currently displayed status page is selected, selection reverts to the first parameter (PAGE). Depressing the minus (-) pushbutton at the operand pushbutton array and then depressing the CRSR pushbutton, sets the display cursor to the first parameter (PAGE) of the currently displayed status page.

NXTV — Holding the NXTV pushbutton depressed sequentially displays the list of parameter entries available for the status parameter selected by the display cursor. After the last parameter entry for the status parameter is displayed, selection reverts to the first parameter entry (except for the PAGE parameter). Entering minus (-) at the operand pushbutton array and then momentarily depressing the NXTV pushbutton, backs up the display of the list by one parameter entry. However, if the NXTV pushbutton is held depressed, display of the list is again sequentially advanced.

ENTER — Depressing the ENTER pushbutton enters the parameter value selected at the operand pushbutton array for the status parameter selected by the display cursor.

NOTE: Depressing the ENTER pushbutton when no parameter value was entered at the operand pushbutton array deletes the parameter value of the status parameter selected by the display cursor. If the parameter value required a numeric entry at the operand pushbutton array and no parameter value was entered, depressing the ENTER pushbutton sets the parameter value to zero.

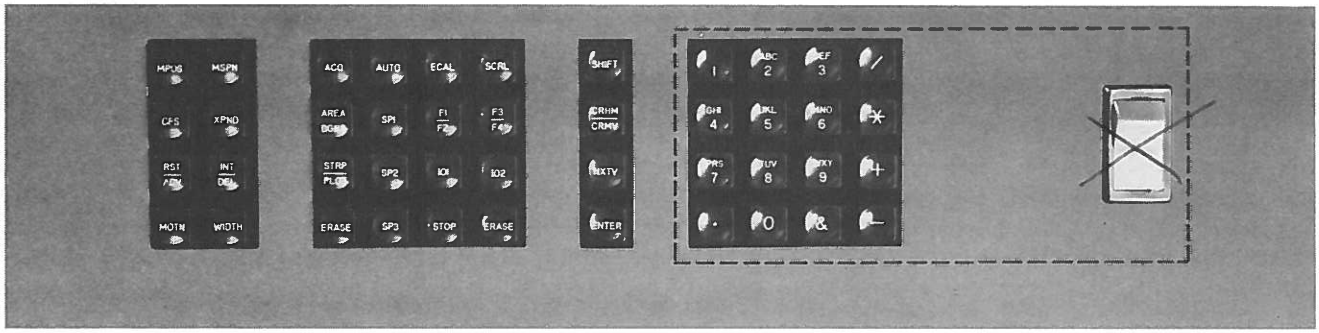

Operand Pushbutton Array

This 16-pushbutton array permits entry of numerical values, operational codes and mathematical operators to define data acquisition, display, manipulation and input/output functions. The telephone format alpha characters on number pushbuttons 2-9 permit entry of functions using understandable mnemonic codes. For example, entering PHAC specifies the PHA Clock Time Acquisition Mode.

Entries made at the operand pushbutton array (numerical values, numeric equivalents of mnemonic operational codes, and mathematical operators) are displayed in the order of entry just below the display of the current status page. This allows the operator to verify their correctness before they are entered by depressing the ENTER pushbutton.

Power On/Off Rocker Switch

Controls application of the ac line voltage to the display CRT and NIM power supply of the ND600 Terminal. When the upper portion of the rocker switch is depressed, power is applied. When the lower portion is depressed, power is removed.

NOTE: On later units, the switch will be located on the rear panel of the ND600 Terminal.

ND600 TERMINAL CRT CONTROLS

INTENSITY	Adjusts the brightness of the CRT display.
FOCUS	Adjusts the sharpness of the CRT display.
↕ POSITION	This control, which is located on the rear of the terminal, adjusts the vertical position of the alphnumeric and spectral data display on the CRT screen.
↔ POSITION	This control, which is located on the rear of the terminal, adjusts the horizontal position of the alphanumeric and spectral data display on the CRT screen.

ND600 ELECTRONICS ENCLOSURE (REAR PANEL)

POWER OFF/ON — Controls application of the ac line voltage to the ND600 Electronics Enclosure. When set to POWER ON, power is applied to the circuits of the ND600 System. When set to POWER OFF, power is removed.

J1 (MSINP) — An input used in multichannel scaling for incrementing the count in each channel. Requires positive pulses, +2.4 to +5V in amplitude with a minimum duration of 30 nsec. Maximum pulse repetition rate is 15 MHz. Input impedance is 75 ohms.

J2 (MSSTA*) — An input used to start a multichannel scaling pass. Requires a +3 to 0V pulse with a minimum duration of 0.5 µsec. Start occurs on the negative or positive transition of the pulse depending upon the setting of switch SW3 on the ACT-A board. If SW3 is set to ON, start occurs on the negative transition of the pulse. IF SW3 is set to OFF, start occurs on the positive transition of the pulse. Input impedance is 220 ohms.

NOTE: A multiple pass, recurrent mode of operation can be selected by setting SW3 to OFF and leaving the start signal either disconnected or at a positive level.

J3 (EXTTB) — An input used to provide an external clock/time base for determining dwell time per channel during multichannel scaling. Requires positive pulses, +2.4 to +5V in amplitude with a minimum duration of 0.5 µsec. Maximum pulse repetition rate is 100 kHz. Clocking occurs on the negative or positive transition of the pulse depending upon the setting of switch SW4 on the ACT-A board. If SW4 is set to OFF, clocking or channel advance occurs on the negative transition of the pulse. If SW4 is set to ON, clocking occurs on the positive transition of the pulse. To use the external clock/time base, TBASE parameter is set to 1 and TMULT parameter is set to EXT.

NOTE: An external time base may also be substituted for the internal clock time base in PHA. When an external clock time is selected for PHA, the live time clock scales at one second intervals with correction introduced at the 10 MHz level. Live time correction can be disabled by setting switch SW7 on the ACT-A board to ON.

J4 (ACQEN) — An input used to enable or hold off acquisition. When switch SW6 on the ACT-A board is set to OFF, this input is normally open (biased at +3V) to enable acquisition. When this input is brought to ground (0V), acquisition is disabled. Setting switch SW6 to ON inverts the acquisition enable/disable function.

J5 (CHNG*) A TTL compatible output signal level which is at +5V during acquisition (i.e., when static or flashing A is displayed on the CRT). Upon termination of acquisition in the auto analysis mode, this level changes to 0V. The transition of this level from +5 to 0V can be used to advance an external sample changer to the next sample.

J6 Switch SW5 on the ACT-A board selectively enables one of two internal signals for output at BNC J6. When SW5 is set to ON, J6 provides a 10 MHz pulse train for system test purposes. When SW5 is set to OFF, J6 provides a pulse upon completion of a multichannel scaling pass. This pulse is TTL compatible, active low, approximately 50 nsec in duration. The circuitry feeding J6 can drive coax cable terminated with 50 ohms.

J7, J8, J9 Spare BNC's.

MODE 2 ACQUISITION

MODE 2 Acquisition is activated by setting either switch SW2 or SW8 on the ACT-A board to ON, or by externally supplying signal DEVEN* to the ACT-A board (50-pin DXT connector, pin 15). Setting the MODE parameter (Status Page 2) to MCS or either of the PHA modes (PHAC or PHAL) when MODE 2 Acquisition is activated, selects MCS MODE 2 and PHA MODE 2, respectively.

MCS MODE 2 enables addition of a 12-bit data word on the ADC data input lines (signals ADC00* - ADC11* where ADC00* is the least significant bit) to the current channel location. Sequential channel advance is controlled by either the internal or an external time base.

PHA MODE 2 enables addition of a 20-bit data word (signals DX04* - DX23*, where signal DX23* is the least significant bit) to the channel location defined by the ADC data input lines (signals ADC00* - ADC12*).

In both of the above modes, sweep synchronization must be controlled via a signal supplied to the J4 (ACQEN*) BNC not the J2 (MSSTA*) BNC. Both modes require a service time of 50 μsec per storage cycle.

CHAPTER IV
OPERATING PROCEDURES

INTRODUCTION

From the point of view of the scientist using the multichannel analyzer, the most important portion of the analyzer is the analog-to-digital converter which produces, in response to each input pulse, a number whose magnitude is a linear function of the peak amplitude of the input pulse.

The basic method used for conversion is a Wilkinson-type converter which employs a circuit which causes a capacitor to become charged to a voltage proportional to the peak voltage of the input pulse. Following this charging operation, the capacitor is linearly discharged, with the time required for this discharge therefore a linear function of the input pulse magnitude. During the discharge, pulses from a periodic pulse generator are counted by means of a simple scaler; the state of the scaler at the end of the process indicating in digital form the magnitude of the input pulse.

This description of the Wilkinson conversion method may also be used in describing the operation of the ADC which is used in the ND600 Analyzer System. This description is, of course, not complete, in that nothing has been said of such things as coincidence gating, generation of "end of conversion" signals, and the like. For a preliminary understanding of the complete analyzer, however, no further discussion is needed of the ADC, in order to understand the overall structure of the pulse height analyzer.

DEFINITION OF TERMS AND DESCRIPTION OF COMMON SPECTRAL FEATURES

Before discussing the principles of radiation analysis, it will be helpful first to define, with explanatory remarks, the terms to be used in the discussion.

Some of these terms emerge from a description of the spectrum shown in Figure 4-1 which shows the distribution of energy of gamma radiation detected by means of a scintillation crystal, NAI (T1), which is one of the most commonly utilized detectors. While the general shape of the Cs137 spectrum is peculiar to this form of detector, the observations usually apply to other detectors.

The presentation is in logarithmic form, wherein the vertical position of each point is at a level which is a linear function of the logarithm of the number of counts recorded in the corresponding analyzer channel. Various features of the spectrum are indicated by Figure 4-2, the legend underneath the figure, and the following explanation.

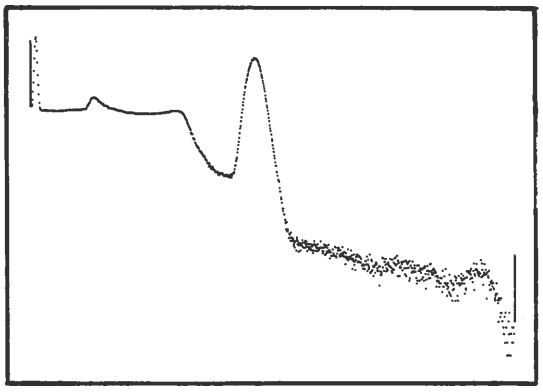

Figure 4-1. Typical 1024 channel Cs137 spectrum taken with energy scale set at approximately 1.3 MeV full scale.

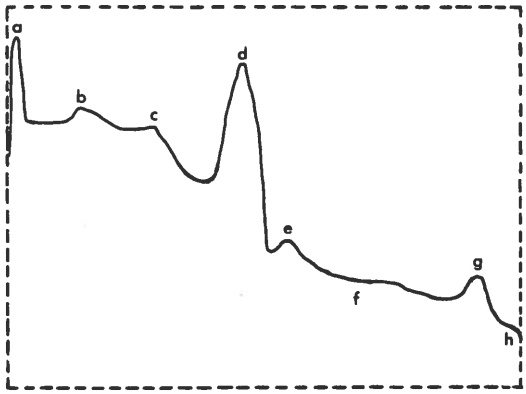

Figure 4-2. Principle features of typical Cs137 spectrum shown in Figure 4-1.

a. 32 keV Barium X-ray line.
b. Backscatter peak
c. Compton edge.
d. 662 keV Cs137 photopeak.
e. 749 keV photopeak of Cs134 impurity.
f. Continuum due to accidental self-concidences producing partial sum pulses.
g. Accident sum coincidence peak.
h. Detail due to background radiation.

Barium X-Ray, 32 keV

This X-ray is useful from the operator's point of view in setting the analyzer zero energy position. It can be removed from the spectrum by use of an absorber such as a one-millimeter thick iron disk. There should be a flat region on the low energy side of this line, extending back to the photomultiplier noise region. Typical noise, at room temperature, does not extend beyond the equivalent of 10 keV. Slightly incorrect amplifier adjustments can cause this noisy region to extend up to the low energy side of the X-ray line, at high counting rates. Amplifier misadjustments can be decreasing the counting rate. At low counting rates amplifier misadjustments produce less apparent noise, whereas photomultiplier noise is not affected appreciably by counting rate and becomes proportionately a greater part of all recorded information.

Backscatter Peak

This broad line is produced by gamma photons which are scattered back at about 180° from surrounding material. The amount of scattering is a function of the distance of the source from the material, descreasing with increasing distance. The proportion of backscattered gammas entering the crystal to the number of gammas directly received, for a fixed sample-to-surrounding-shield distance obviously decreases as the distance from the source to the detector decreases. The shielding around the detector and source should not be nearer than approximately one foot, and the source should not be more than two or three inches from the detector.

Compton Distribution

Although the Cesium 137 source emits a nearly monochromatic gamma, the sodium iodide crystal does not absorb all of the energy of all of the gamma photons entering the crystal. The amount of energy absorbed in the crystal is quite random, except that there is a minimum amount of energy with which any gamma may escape after interacting. The probability of any gamma, which has lost only part of its energy in an interaction with an atom within the crystal, losing all or part of its remaining energy in interactions subsequent to the initial "collision" increases with crystal size. The resolution of the crystal-photomultiplier combination usually decreases somewhat as the crystal size increases, but the slight loss in resolution is much less important than the effect of a large number of gammas escaping the crystal after losing only part of their energies.

0.662 MeV Photopeak

Those gammas which lose all of their energies within the crystal produce a large number of scintillations in the crystal. The number of light photons produced is, on the average, proportional to the gamma energy absorbed, but unfortunately only a small percentage of light photons produce photoelectrons at the photomultiplier cathode. Since the number of scintillations and the number of photoelectrons produced is subject to statistical variations, the pulse height produced at the photomultiplier anode differs from individual gamma photons, despite the fact that all of the absorbed gamma photons were virtually identical in energy. The width of the photopeak, at half height, is approximately equal to 2 $\sqrt{N}$, where N is the average number of photoelectrons produced at the phototube cathode. A typical width, at half height, for the cesium 137 photopeak, is 53 keV.

0.794 MeV Cesium 134 Photopeak

Accidental Self-coincidence Continuum

At any counting rate, there is a finite probability of two gammas entering the crystal at nearly the same time. Even if these gammas are of identical energies, there is a certain chance that one, or neither, will lose all of their energies, or that both will be totally absorbed. There is a greater chance that they will enter at slightly different

times, perhaps a microsecond apart, than nearly coincidentally. There will always be a photomultiplier output pulse which is greater than if only one of the gammas had entered, if the two are coincident within a microsecond. The "sum" pulse produces the apparent continuum beyond the photopeak, and in fact produces a continuum at lower energies also, obscured by the non-coincident gamma counts. The number of counts in this continuum is directly proportional to the source intensity, for a given isotope. It is obvious that not only is this continuum capable of completely obscuring very weak lines, but what is quite as important in some cases is the fact that counts appearing in this continuum represent counts which have been "swept out" of some other region of the spectrum by the accidental self-coincidences. Analyzers capable of perfect, dead time corrected, timing of experiments are frequently accused of incorrect timing because of the absence of counts in a line, swept out by accidental coincidences. Errors of a percent can occur at counting rates of 10,000 pulses per second while the accuracy of the timing should be better than one percent. The sweepout effect must be considered during tests of timing accuracy or during quantitative measurements of activity.

Accidental Self-coincidence Sum Peak

Calculation of the shape of the self-coincidence component of the complete spectrum would be difficult, since the amplifier and analyzer characteristics enter the situation. It is not difficult to see, however, that it is not unreasonable to expect that two completely absorbed gammas virtually in coincidence will occur frequently enough to produce a sum peak at the region corresponding to 1.324 MeV. Such "accidental" or quasium peaks can readily be distinguished from true sum peaks by changing the counting rate without changing the source-to-detector position (use a weaker sample). True sum peaks do not vary in intensity, relative to other lines in the spectrum, as a function of source intensity.

Background Detail

The detector used in this measurement was not shielded.

PRINCIPLES OF RADIATION ANALYSIS

In this section will be discussed the numerous concepts and instrument requirements which are encountered in the analysis of the energy distribution of events detected by various radiation detectors. The discussion will be general in the sense that it will usually not refer to the use of Nuclear Data analyzers but to matters encountered in the use of any pulse height analyzer. It should not be taken to represent universally accepted interpretations, but it is a reasonably objective discussion.

In any interpretation of a multichannel analyzer spectrum, it is important that all the effects of experimental conditions be carefully considered. For example, in the spectrum shown in Figure 4-1, experimental conditions can alter the shape of the spectrum in many ways. The amount of X-radiation detected depends upon the material between

the source and the sodium iodide crystal, and the backscatter peak magnitude depends upon the nature and location of the surrounding material. The reasons for which these changes in condition can alter the spectral shape are for the most part beyond the scope of this discussion. But it is important to appreciate that conditions which might appear irrelevant to those not well acquainted with the techniques, can markedly affect the spectrum shape. Not only can experimental results be misinterpreted, if the experimental conditions are improperly controlled, but the operation of the analyzer cannot properly be evaluated unless test conditions are quite well reproduced.

The effect of counting rate, that is to say, source intensity, upon the shape of the spectrum is evident from comparative measurements made under the same conditions except for source intensity. The apparent continuum of radiation beyond the photopeak is at a higher level for the case of higher counting rate than for the low counting rate measurement. This is to be expected for the following reasons.

The probability of two events being nearly coincident, by accident, at any given counting rate can readily be calculated. If the input pulses are one microsecond wide, after amplification and shaping, then at 10,000 events per second at the radiation detector, about one percent of the events will be to some degree improperly reported by the detector. It is not always important that the number of accidental self-coincidences be minimized, but in some measurements if such coincidences occur once per hundred pulses, the error may be important. What is more important is there may well be information of interest obscurred by the presence of large number of "accidentals". Where accurate quantitative measurements are involved, and whenever experimental conditions permit, analysis should be at a sufficiently low counting rate to reduce the number of accidental coincidences to an acceptably low level. The effects produced by accidental self-coincidence are commonly referred to as pulse pile-up effects.

More frequently than in the past, automatic data reduction techniques are utilized in interpreting accumulated data. The method most commonly used is to subtract, point by point, one or more components of the spectrum by use of a previously measured or computer-derived standard spectrum. If the standard spectrum was compiled at low counting rate, then the remainder of the complex spectrum, after subtracting out a single component may be in error if the complex spectrum was measured at high counting rates. The same sort of error will be made if the source-detector geometry has been changed from that used in accumulating the standard. This is further evidence that for highly accurate work, source intensities should be kept as low as economics and other experimental factors permit. Carefully standardized detector-source geometrics, and standardized energy scales are recommended in applications involving activation analysis.

A large proportion of the experiments made with this type instrument do not involve gamma analysis, of course, and in some cases nuclear particles (protons, neutrons, deuterons, etc.), or dust, rather than gamma radiation is involved. But, in as much as the input signals are of the same general shape and randomness as those encountered in gamma analysis, the requirements upon the analyzer are roughly the same.

Analog to Digital Converter

Conversion Gain Selection. One factor to consider in the selection of the proper conversion gain is storage capacity of the analyzer memory being used. Since the number of address advance pulses for a full scale (8 volt) input signal corresponds to the Conversion Gain switch positions of 256, 512, 1024, 2048, 4096 and 8192, it may seem feasible to select the switch position corresponding to the memory size, i.e., for a 1024 channel memory, set the switch at 1024, for a 2048 channel memory, set the switch at 2048, etc. This is true in some experiments but not necessarily in others. For example, if the energy of interest does not exceed four volts, it would be better to select a conversion gain of 2048 with a 1024 channel memory size since the spectrum peaks would be spread out over the full memory rather than half as would be the case if a conversion gain of 1024 were chosen.

Another factor to consider is resolution. With the Conversion Gain switch set at 1024, each channel represents 8 millivolts for a full scale 8 volt input. This means the voltage levels can be resolved within 8 millivolts of each other, hence the term resolution. As the conversion gain is lowered (voltage per channel increased), the resolution decreases accordingly. Therefore, if the experiment being performed requires high resolution to obtain the desired accuracy, it may be advantageous to use a higher conversion gain setting.

Still another factor to consider is speed. Since the analysis time for a full scale input pulse with the Conversion Gain switch set at 1024 is twice as long as it is with the switch set at 512, it may be feasible to use a lower conversion gain setting when speed rather than resolution is desired. However, since the average analysis time rather than the maximum is usually used in evaluating the selection of the proper conversion gain, the percentage of increase in speed is considerably less and the loss in resolution may be enough to make the increase in speed meaningless. Therefore, first consider how these factors will affect the experiment being performed and then select the conversion gain which is most applicable.

Lower Level Discriminator Adjustment. In some experiments, intense noise or low energy radiation may be present. To reduce the effect of dead time, which is a result of noise analysis, the THRESHOLD (LLD) control must be adjusted above the level of the noise. The THRESHOLD (LLD) control biases a discriminator circuit such that signals below the bias level imposed by this control are not presented to the ADC for analysis. For those signals which exceed the bias level, the bias is removed to permit passage of the entire signal. Therefore, a large signal would be analyzed into exactly the same counting channel, independent of the bias, but small signals would not be analyzed.

A percent dead time meter is a useful tool in determining whether or not the ADC is preoccupied with the useless analysis of noise. This allows the user to determine whether or not the setting of the THRESHOLD (LLD) control affects the indicated percent dead time.

When there is no appreciable noise mixed with the input signal, a minimum THRESHOLD (LLD) control setting equivalent to 30 to 40mV is usually appropriate. For highest linearity in the lower energy regions, the THRESHOLD (LLD) control should be set at the minimum value. However, if there is an apparent increase in noise, the minimum setting should be increased accordingly.

Upper Level Discriminator Adjustment. The setting of the ULD control (may be loctaed on the front panel or internal) selects the triggering level of the upper level discriminator circuit. Input pulses which exceed the bias setting imposed by this control will cause the linear gate of the ADC to close, prohibiting the analysis of the input pulse. For most experiments, this control is set to maximum (approximately 8.8V), but can be set as desired iment depending upon experiment requirements.

Zero Level Adjustment. The Zero control is used primarily for precise adjustment of energy zero to correspond to the lower boundry of channel zero. It will be found that alteration of the Conversion Gain switch or input coupling (AD/DC) switch changes the energy zero position. It is therefore recommended that the proper setting of the ZERO control to locate the zero energy intercept be correctly determined each time a different conversion gain or input coupling mode is selected. It is likely that a calibration performance check once a month will be adequate for most applications, but this must be determined by experience.

ND600 Terminal

The ND600 Terminal is the system's display and operational control center. It contains the display CRT, 44-pushbutton interactive keyboard and four-wide NIM enclosure and power supply.

The CRT provides display of four separate pages of alphanumeric data simultaneously with spectral data. Each page contains parameter data pertinent to basic operational functions of the ND600. Page 1 contains parameters normally associated with visually monitoring spectral data. Page 2 contains parameters relating to set-up and performance of data acquisition. Page 3 contains the data manipulation parameters. Page 4 contains the parameters available for set-up of an auto-job sequence.

The 44-pushbutton interactive keyboard is functionally grouped for ease of operation. An eight-pushbutton array controls data display, a 16-pushbutton array allows quick selection of data acquisition, manipulation and input/output functions, a four-pushbutton array selects and controls status display, and another 16-pushbuttons array permits numerical entry, mode selection and mathematical manipulation.

The 4-wide NIM enclosure and power supply houses and powers the ADC and other front-end signal conditioning modules and places them in close proximity to the CRT display and pushbutton keyboard.

DATA ACQUISITION

A brief definition of data acquisition is that mode in which the ND600 Analyzer System is able to accept and accumulate new information. The three acquisition modes are pulse height analysis (amplitude analysis), multichannel scaling (time analysis) and sequential listing.

Pulse Height Analysis

Analysis of signals on an amplitude basis enables the acquisition of data which represents radiation intensity as a function of either energy or velocity. Other relationships that can be expressed by number of counts or sampling per unit of voltage amplitude can also be acquired. In certain applications, additional external equipment may be required.

During amplitude analysis, the converter generates a train of pulses with the number of pulses directly proportional to the amplitude of an analyzed input signal. The pulses are counted by the channel scaler in the ADC and the resultant number is then transferred to the address register in the Data Handling Unit. This address is then used to index a storage address in the memory. A count of one is then added to, or subtracted from, the indexed storage channel, depending upon whether add or subtract operation has been selected by the experimenter.

The following operating procedures describe data acquisition in the pulse height analysis mode. Included are initial set-up procedures for PHA spectrum storage, energy calibration and alphanumeric status page selection and parameter entry. Also included is a procedure for PHA spectrum storage for a preset clock time. When performing the pulse height analysis procedures, the NaI detector and ND520 PAD are connected to the ADC by connecting BNC cables between the NAI detector and the ND520 PREAMP IN BNC and between the ND520 AMP OUT BNC and the ND575 SIGNAL BNC.

Initial System Set-Up and Spectrum Storage

The following procedures provide step-by step instructions to ensure the ND600 Analyzer System is ready for normal operation. These procedures should be performed as a matter of routine before operating the ND600 Analyzer System.

1. Set ADC and PAD controls to initial positions as follows:

a. ND575 ADC Module

Control	Initial Position
CONV GAIN	2K
ULD	Fully clockwise (if internal, it is preset fully clockwise at the factory).
THRESHOLD(LLD)	Fully counterclockwise.
ZERO	Fully counterclockwise.
ACQ/OFF/STRB	OFF
DC/AC	AC (down position)
COIN/OFF/ANTI	OFF

b. ND520 PAD Module

Control	Initial Position
COARSE GAIN	4
FINE GAIN	Mid range.
DISC	10.0

2. After the ADC and PAD controls have been initially set, initiate acquisition as follows:

a. Set the POWER rocker switches on ND600 Electronics Enclosure rear panel and ND600 terminal keyboard to POWER ON.

b. Adjust the INTENSITY control on the ND600 Terminal until the display is visible on the CRT screen. Then adjust the FOCUS control for the desired display sharpness.

NOTE: When power is applied, the display is initialized to Status Page 1 and 2048 data channels with the left and right markers positioned at channels 1 and 2047, respectively.

c. Simultaneously depress both ERASE pushbuttons to clear the contents of all data channels to zero.

d. Depress the SHIFT pushbutton to select the left (<<)direction and then depress the INT/DEL pushbutton to delete any intensified channels.

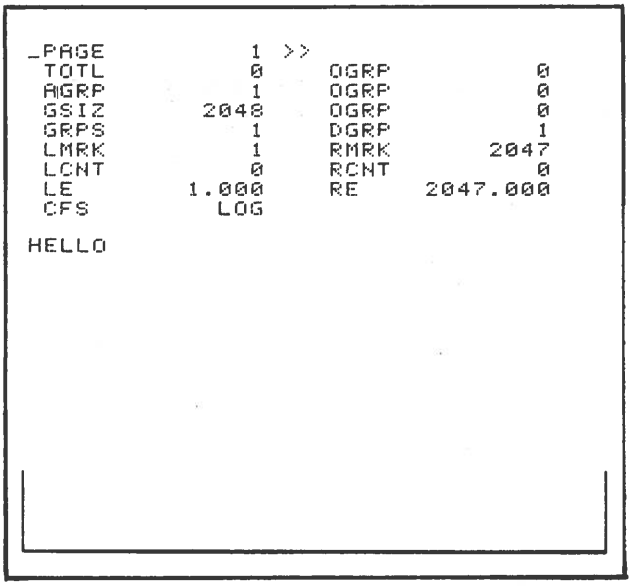

Initial display of Status Page 1 and 2048 data channels with the left and right markers positioned at channel 1 and 2047, respectively.

e. Disconnect the BNC cable from the ND575 SIGNAL BNC and set the ND575 ACQ/OFF/STRB switch to STRB.

f. Depress the ACQ pushbutton.

NOTE: When power is applied, the acquisition mode (MODE parameter, Status Page 2) is initialized to PHA Live Time (PHAL) and acquisition time is initialized to infinity seconds, i.e., the PTIM and TMULT parameters (Status Page 2) are set to zero (0) and one second (1S), respectively.

g. Adjust the ND575 ZERO control until storage is observed in channel one (1).

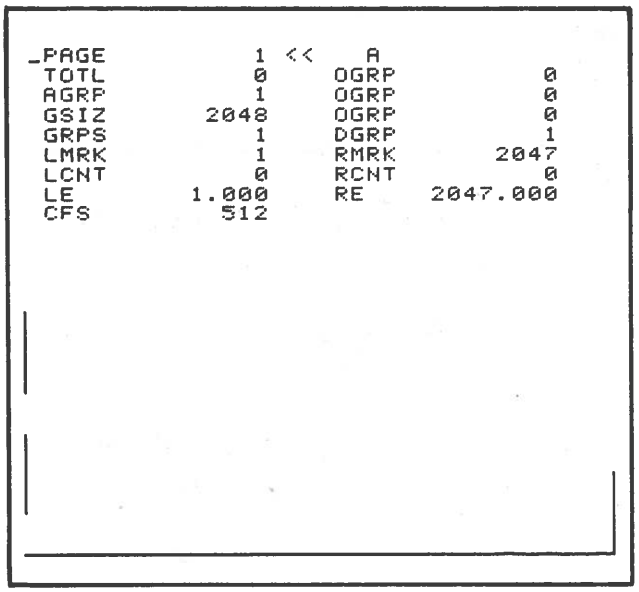

2048 channel display showing storage in channel 1.

h. Set ND575 ACQ/OFF/STROBE switch to ACQ.

i. Re-connect the BNC cable from the ND520 AMP OUT BNC to the ND575 SIGNAL BNC.

j. Adjust the ND575 THRESHOLD (LLD) control clockwise until storage of a spectrum is observed. The system is now in operation and the ND575 ADC is properly zeroed.

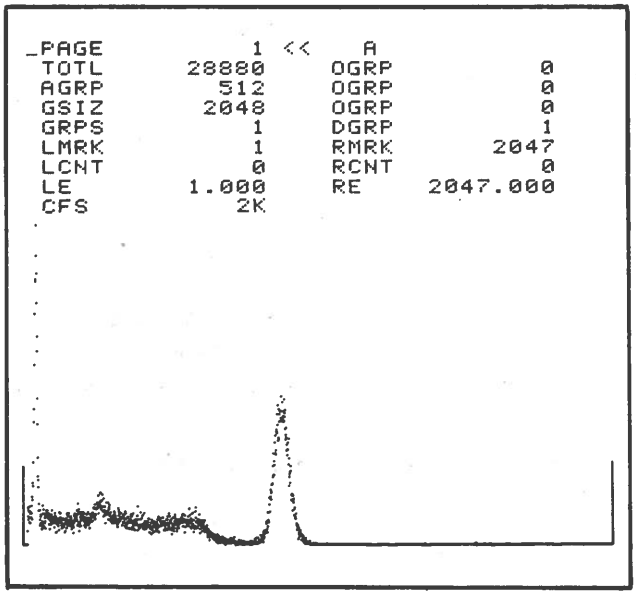

2048 channel display showing storage of a Cs137 spectrum.

NOTE: If acquired data is never to be directly compared with other data runs, i.e., channel by channel comparison or spectrum stripping, ADC zero can be set at the highest value which ensures a positive intercept for all conversion gains. If data is to be compared directly or stripped from other data, such as reference standards, precise front-end calibration as described in the following paragraphs is required.

System Calibration

Using the ND600 marker pushbuttons, the ND520 amplifier gain controls and the ND575 ZERO control, the system can be calibrated for direct reading in keV/channel. The following is a typical procedure for system calibration at 1 keV/channel. This procedure assumes the Initial System Set-Up and Spectrum Storage procedure has been performed to verify proper system operation, i.e., power is on, and all controls are set to initial positions. This procedure also assumes the front end equipment (particularly the detector) is fairly linear over the 0 to 1 MeV range. Since NaI detectors are not very linear, better calibration accuracy could be obtained using a solid state GeLi detector, but for exemplatory purposes a NaI detector will suffice. Cs137 will be used as the calibration source.

1. Depress minus (-) pushbutton and then ACQ pushbutton.

2. Set ND575 CONV Gain switch to 1024.

3. Position the display cursor to the GSIZ parameter (Status Page 1) using the CRSR pushbutton, enter 1024 at the operand pushbutton array and depress the ENTER pushbutton. This selects a storage group size of 1024 channels.

NOTE: The display group (DGRP) and the acquire group (AGRP) parameters are initialized to 1 when power is applied.

4. Using the MPOS and MSPN pushbuttons, position the left and right markers at channels 32 and 662, respectively.

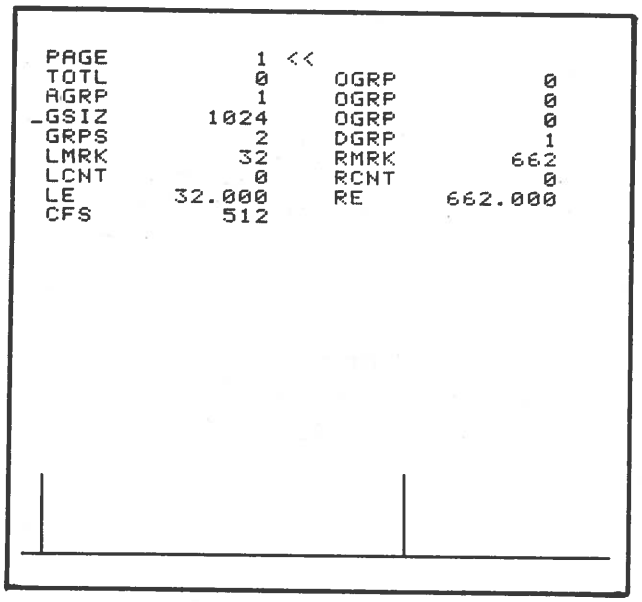

1024 channel display showing left and right markers positioned at channels 32 and 662, respectively.

5. Depress ACQ pushbutton.

6. Adjust ND520 COARSE and FINE GAIN controls so that 0.662 MeV Cs137 photopeak falls at channel 662 (right marker). After each gain adjustment allow sufficient data accumulation time to determine peak position and then depress both ERASE pushbuttons.

7. Adjust ND575 ZERO control and the ND520 FINE GAIN control so that both the 0.032 MeV X-ray peak and the 0.662 MeV Cs137 photopeak fall at the proper channel locations. The system is now calibrated for 1 keV/channel.

8. After satisfactory calibration is achieved, depress the ACQ pushbutton, the minus(-) pushbutton and then the ACQ pushbutton again.

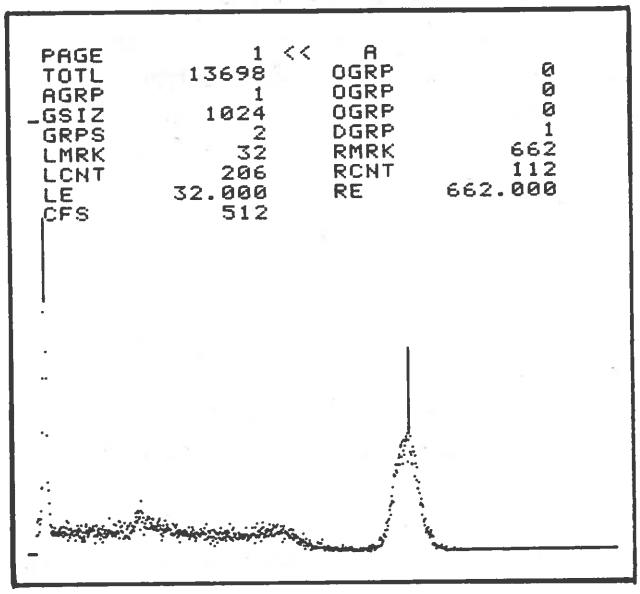

1024 channel display showing 32 keV X-ray peak and 662 keV Cs137 photopeak falling at left and right markers, respectively, after achieving satisfactory calibration.

NOTE: The procedure for an energy calibration of 1 keV/channel with a CONV GAIN Switch setting of 1024 was described above. A similar procedure can be performed for energy calibration of 4, 2, 0.5, 0.25 and 0.125 keV/channel with respective CONV GAIN switch settings of 256, 512, 2048, 4096 and 8192.

Alphanumeric Status Page and Parameter Entry

Any of eight status pages can be selected for display of alphanumeric parameter data simultaneous with spectral data. Status Pages 1, 2, 3 and 4 each contain alphanumeric parameter data pertinent to basic operational functions of the system. Status Page 0 is completely blank and is used primarily during acquisition and readout when display of alphanumeric data is not desired or when outputting to an S-Y plotter. Status Pages 5, 6 and 7 are also blank except for the PAGE parameter. The blank status pages are available for alphanumeric parameter data associated with certain firmware options or for user entry of special alphanumeric parameter data appliable to a particular experiment, such as dates, titles or other alphanumeric information a user desires to further identify a particular experiment.

The procedure for status page selection is as follows:

1. Depress the minus (-) pushbutton at the operand pushbutton array and then depress the CRSR pushbutton to set the display cursor to the PAGE parameter of the currently displayed status page.

2. If the status page desired is a higher numbered page than the current status page, depress the NXTV pushbutton until the desired status page is displayed.

3. If the status page desired is a lower numbered page (or a higher numbered page) than the current status page, enter the number of the desired page at the operand pushbutton array and then depress the ENTER pushbutton. When the ENTER pushbutton is depressed, the selected status page is displayed. If the ENTER pushbutton is depressed without an entry at the operand pushbutton array, Status Page 0 (no status display) is selected.

When power is applied to the ND600 System, the display is initialized to Status Page 1 with each of its parameters set to an initial value. When power is applied, the parameters of Status Pages 2, 3 and 4 are also set to initial values. The initialized state of Status Pages 1, 2, 3 and 4 is shown below:

```
_PAGE          1 <<
 TOTL          0      OGRP          0
 AGRP          1      OGRP          0
 GSIZ       2048      OGRP          0
 GRPS          1      DGRP          1
 LMRK          1      RMRK       2047
 LCNT          0      RCNT          0
 LE        1.000      RE     2047.000
 CFS         LOG
```

Status Page 1

```
_PAGE          2 <<
 MODE       PHAL      TOGO          0
 AGRP          1      DGRP          1
 TBASE         1      TMULT        1S
 PTIM          0      LT            0
 PTOT          0      CT            0
 PLEV          0      BUSY      0.000
 DOFF          0      RATE      0.000
 TOTL          0
```

Status Page 2

```
_PAGE          3 <<
 E/CH      1.000      E(0)      0.000
 AGRP          1      D/O       0.000
 AREA          0      D/O       0.000
 BGND          0      D/O       0.000
 TOTL          0      DGRP          1
 FWHM      0.000      SF        1.000
 PEAK      0.000
```

Status Page 3

```
_PAGE          4 <<
 CYCLES        1      F1
 CTOGO         0      F2
 STEP1                F3
 STEP2                F4
 STEP3                IO1          TTY
 STEP4                 MODE       BCDO
 STEP5                 DATA        ALL
 STEP6                IO2
 STEP7                 MODE
 STEP8                 DATA
 AUTG          1      STRIP     0.000
 DGRP          1       WGRP         0
 AGRP          1
```

Status Page 4

Parameter data on Status Page 1, 2, 3 and 4 which varies with operational functions, such as elapsed time, channel contents or count totals, is periodically updated by the system. Parameter data which is user selected, such as an operational mode, numerical value or mathematical manipulation is altered as follows:

1. Position the display cursor to the desired parameter.

a. If the status parameter to be altered is near the top of the current status page, depress the SHIFT pushbutton to select the left (<<) direction and depress the CRSR pushbutton until the display cursor is adjacent to the desired parameter. Each time the CRSR pushbutton is depressed, the display cursor will move to the next parameter to the right or down, line by line. After selection of the last parameter of the current status page, selection reverts to the first (PAGE) parameter.

b. If the status parameter to be altered is near the bottom of the current status page, depress the SHIFT pushbutton to select the right (>>) direction and depress the CRSR pushbutton until the display cursor is adjacent to the desired parameter. Each time the CRSR pushbutton is depressed, the display cursor will move to the next parameter to the left or up, line by line. After selection of the first (PAGE) parameter, selection reverts to the last parameter of the current status page.

2. Enter the new value for the selected parameter.

a. If the parameter value to be altered is a numerical value, sequentially enter the digits of the number at the operand pushbutton array, preceded by a minus (-) if the value is negative, insert a decimal point (.) where required if the value is a decimal fraction, and then depress the ENTER pushbutton. Entries at the operand pushbutton array are displayed as they are entered in the line following the last line of the current status page for verification of their correctness prior to depressing the ENTER pushbutton. For most numerical entries, the number can be up to 6 digits, exclusive of sign and decimal point. For decimal entries, at least one digit must precede the decimal point (e.g. 0.436).

b. If the parameter value to be altered is for a parameter which is defined by a list of alphanumeric codes (such as an acquisition mode, time multiplier, I/O device, etc.) or by a list of integer values (such as, a status page number, group size, acquire or display group number, etc.), it may be selected by depressing the NXTV pushbutton until the desired value is displayed for the parameter selected by the display cursor. Holding the NXTV pushbutton depressed sequentially displays the list of parameter value for the parameter selected by the display cursor. After the last parameter value in the list is displayed, selection reverts to the first parameter value (except for the PAGE parameter). Entering minus (-) at the operand pushbutton array and then momentarily depressing the NXTV pushbutton permits backing up display of the list by one parameter value. However, if the NXTV pushbutton is held depressed, display of the list is again sequentially advanced.

NOTE: The telephone format alpha characters on number pushbuttons 2-9 of the operand pushbutton array permit entry of functions in understandable mnemonic codes. For example, PHA Clock Time Acquisition is specified for the MODE parameter (Status Page 2) by sequentially depressing the number pushbuttons containing the alpha characters PHAC and then depressing the ENTER pushbutton. The numerical equivalent of the mnemonic code (i.e. the numbers of the pushbuttons corresponding to the alpha characters) is displayed in the line following the last line of the current status page for verification of its correctness prior to depressing the ENTER pushbutton.

PHA Spectrum Storage for a Preset Clock Time

The following is a typical procedure for acquiring 1024 channels of data in the pulse height analysis mode for a preset clock time of 60 seconds. Memory group 2 will be selected for data storage. This procedure assumes the Initial System Set-up and Spectrum Storage procedure has been performed to verify proper system operation, i.e., power is on and all controls are set to initial positions.

1. Enter Stop Mode by depressing the ND600 STOP pushbutton.

NOTE: If system is still in the acquire mode as indicated by display of a flashing "A", depress the ACQ pushbutton, the minus (-) pushbutton and then depress the ACQ pushbutton again. If a static "A" is displayed, depress the minus (-) pushbutton and then the ACQ pushbutton.

2. Select an ADC conversion gain of 1024 channels by setting the ND575 CONV GAIN switch to 1024.

3. Select memory storage group size of 1024 channels.

a. Select Status Page 1.

b. Set the display cursor to GSIZ parameter using the CRSR pushbutton.

c. Enter 1024 at the operand pushbutton array and depress the ENTER pushbutton.

4. Select group 2 as the acquire and display group.

a. Select Status Page 2.

b. Set the display cursor to the AGRP parameter using the CRSR pushbutton.

c. Enter 2 at the operand pushbutton array and depress the ENTER pushbutton.

d. Set the display cursor to the DGRP parameter using the CRSR pushbutton.

e. Enter 2 at the operand pushbutton array and depress the ENTER pushbutton.

5. Erase the selected memory group by simultaneously depressing both ND600 ERASE pushbuttons.

6. Select the PHA Clock Time Mode of Acquisition.

a. Set the display cursor to the MODE parameter using the CRSR pushbutton.

b. Depress the NXTV pushbutton until PHAC is displayed for the MODE parameter.

7. Select a preset acquisition time of 60 seconds.

a. Set the display cursor to the TMULT parameter using the CRSR pushbutton.

b. Depress the NXTV pushbutton until 1S is displayed for the TMULT parameter.

c. Set the display cursor to the PTIM parameter using the CRSR pushbutton.

d. Enter 60 at the operand pushbutton array and depress ENTER pushbutton.

8. Start data acquisition by depressing the ACQ pushbutton. The ND600 will now acquire data for 60 seconds (clock time) and then automatically stop acquiring data. During acquisition the character "A" is flashed on the display to indicate the ND600 is in the acquire mode.

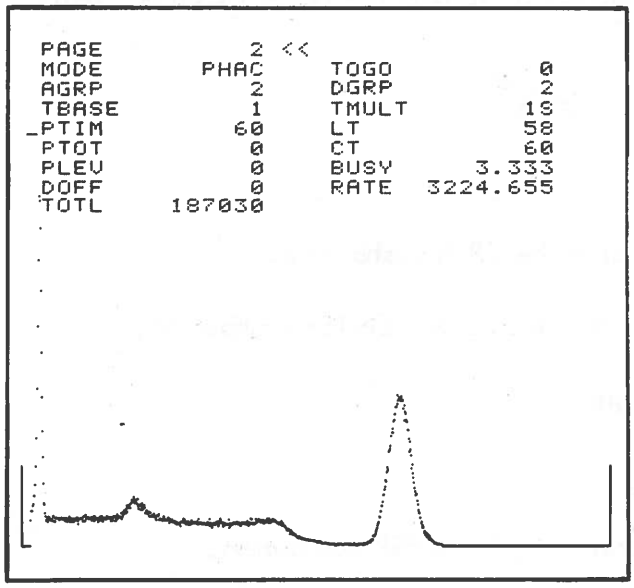

Display of Status Page 2 and resultant 1024 channel Cs137 spectrum after acquiring for 60 seconds in the PHA clock time mode. Counts full scale is 4K.

Multichannel Scaling

Analysis of signals on a time basis enables the acquisition of data which represents radiation intensity as a function of time. Data which represents other relationships that can be expressed by the number of counts per unit of time can also be acquired when appropriate external equipment is employed.

Multichannel scaling is comparable to counting in a series of scalers. Up to one million counts can be totalized and stored in each channel of the memory. The address register can either be advanced by the internal or an external time base generator to enable data accumulation in each channel for a fixed period of time (dwell time).

The following two operating procedures describe data acquisition in the multichannel scaling mode. One is a procedure for performing a single multichannel scaling pass. The other is a procedure for performing recurrent multichannel scaling passes. When performing these multichannel scaling procedures, the NaI detector and ND520 PAD are

connected to the ND600 unit by connecting BNC cables between the NaI detector and the ND520 PREAMP IN BNC and between the ND520 DISC OUT BNC and the ND600 J1 (MSINP) BNC (rear panel). These procedures assume the Initial System Set-Up and Spectrum Storage Procedure has been performed to verify proper system operation, i.e., power is on and all controls are set to initial positions.

Multichannel Scaling (Single Pass)

The following is a typical procedure for performing a single multichannel scaling pass in a 1024 channel memory group at a dwell time of 10 msec per channel. The multichannel scaling pass is initiated by a +3 to 0V start pulse applied to the ND600 J2 (MSSTA*) BNC (rear panel) from the external equipment.

NOTE: Each multichannel scaling pass can be initiated simply by depressing the ACQ pushbutton rather than applying an external start pulse if a shorting BNC is inserted in the ND600 J2 (MSSTA*) BNC.

1. Enter the Stop Mode by depressing the ND600 STOP pushbutton.

2. Select a memory storage group of 1024 channels.

a. Select Status Page 1.

b. Set the display cursor to the GSIZ parameter using the CRSR pushbutton.

c. Enter 1024 at the operand pushbutton array and depress the ENTER pushbutton.

NOTE: The display group (DGRP) and acquire group (AGRP) parameters are initialized to 1 when power is applied.

3. Erase selected memory group by simultaneously depressing both ND600 ERASE pushbuttons.

4. Select the Multichannel Scaling Mode.

a. Select Status Page 2

b. Set the display cursor to MODE parameter using the CRSR pushbutton.

c. Select the MCS mode using the NXTV pushbutton.

5. Select a dwell time per channel of 10 msec.

a. Set the display cursor to the TBASE parameter using the CRSR pushbutton.

b. Enter 1 at operand pushbutton array and depress the ENTER pushbutton.

c. Set the display cursor to the TMULT parameter using the CRSR pushbutton.

d. Select a time multiplier of 10MS using the NXTV pushbutton.

6. Select a single MCS pass.

a. Set the display cursor to the PTIM parameter using the CRSR pushbutton.

b. Enter 1 at the operand pushbutton array and depress the ENTER pushbutton.

7. Start data acquisition by depressing ND600 ACQ pushbutton. The multichannel scaling pass will begin when the start pulse is applied. When the pass is completed, the ND600 will automatically stop acquiring data.

8. When multichannel scaling pass is completed, set the CFS parameter (Status Page 1) to the desired viewing level using the CFS pushbutton and view the resultant spectrum on the display CRT.

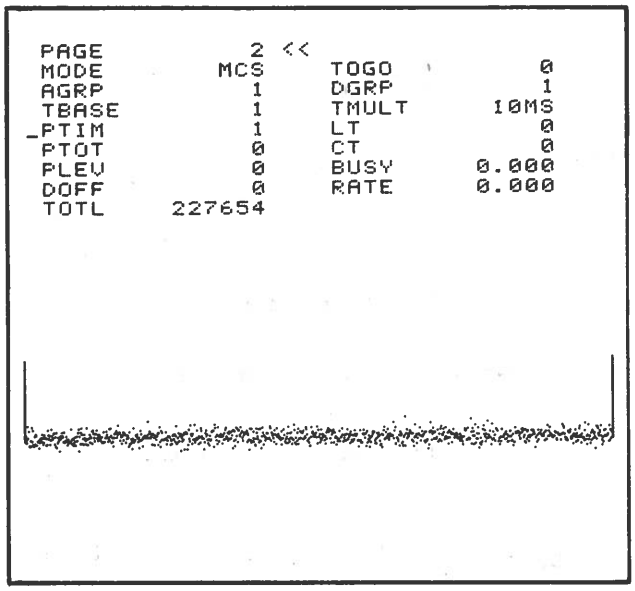

Display of Status Page 2 and resultant 1024 channel spectrum after a single multichannel scaling pass. Counts full scale is 1K.

Multichannel Scaling (Preset Recurrent Passes)

The following is a typical procedure for performing a preset number of recurrent multichannel passes in a 1024 channel memory group at a dwell time of 10 msec per channel. Data acquired in each subsequent pass is added to the data stored in the previous pass. Each multichannel scaling pass is initiated by a +3 to 0V start pulse applied to the ND600 J2 (MSSTA*) BNC (rear panel) from the external equipment.

NOTE: A preset number of multichannel scaling passes can be initiated simply by depressing the ACQ pushbutton rather than applying a separate start pulse to initiate each pass if a shorting BNC is inserted in the ND600 J2 (MSSTA*) BNC.

1. Enter the STOP mode by depressing the ND600 STOP pushbutton.

2. Select a memory storage group of 1024 channels.

a. Select Status Page 1.

b. Set the display cursor to the GSIZ parameter using the CRSR pushbutton.

c. Enter 1024 at the operand pushbutton array and depress the ENTER pushbutton.

NOTE: The display group (DGRP) and acquire group (AGRP) parameters are initialized to 1 when power is applied

3. Erase selected memory group by simultaneously depressing both ND600 ERASE pushbuttons.

4. Select the Multichannel Scaling Mode.

a. Select Status Page 2.

b. Set the display cursor to the MODE parameter using the CRSR pushbutton.

c. Select the MCS mode using the NXTV pushbutton.

5. Select a dwell time per channel of 10 msec.

a. Set the display cursor to the TBASE parameter using the CRSR pushbutton.

b. Enter 1 at the operand pushbutton array and depress the ENTER pushbutton.

c. Set the display cursor to the TMULT parameter using the CRSR pushbutton.

d. Select a time multiplier of 10MS using the NXTV pushbutton.

6. Select 10 recurrent passes.

a. Set the display cursor to the PTIM parameter using the CRSR pushbutton.

b. Enter 10 at the operand pushbutton array and depress the ENTER pushbutton.

7. Start data acquisition by depressing the ND600 ACQ pushbutton. The first multichannel scaling pass is initiated when the start pulse is applied. Upon completion of the first pass, the ND600 awaits the arrival of the next start pulse. Each subsequent pass is initiated when another start pulse is applied. The counts obtained on each subsequent pass are added to those stored in the selected memory group on the previous passes.

8. Observe and count the number of passes on the oscilloscope. When the last (10th) of the preset number of passes is completed, the ND600 will automatically stop acquiring data. Set the CFS parameter (Status Page 1) to the desired viewing level using the CFS pushbutton and view the resultant spectrum on the display CRT.

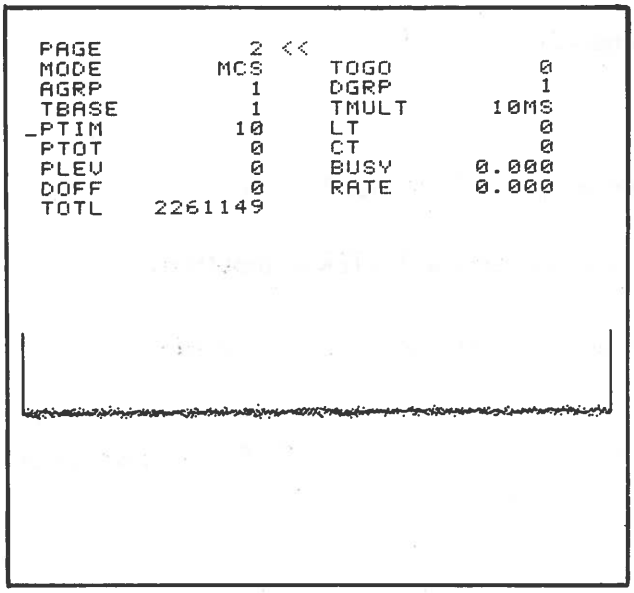

Display of Status Page 2 and resultant 1024 channel spectrum after ten multichannel scaling passes. Counts full scale is 8K.

Sequential Listing

During sequential listing, events (words) from the ADC are stored as 12-bit digital words in sequential memory locations, i.e., the first event is stored in channel zero, the second in channel one, etc. The 12-bit data words can be accepted up to a maximum rate of 100 kHz.

The List Mode of Acquisition provides precise amplitude versus time digitization of slowly varying analog inputs. It also permits use of the memory as a buffer in conjunction with an external digital computer or magnetic tape.

NOTE: If the ADC is used to sample slowly varying analog inputs, the digitized data for list entry can be controlled by the ADC internal autostrobe circuitry at a nominal rate of 7,500 samples per second.

DATA SUBTRACTION

Data can be subtracted from a cleared memory group or from previously accumulated data which is stored in memory group. The subtraction operation is accomplished by setting the display cursor to the AGRP parameter, entering minus (-) and the acquire group number at the operand pushbutton array and then depressing the ENTER pushbutton. Data subtraction from a cleared memory group can be used to remove background from a spectrum. This is accomplished by first acquiring the background, storing this information in one memory group, and then transferring this information to a second memory group. The resultant spectrum represents the desired spectrum less background. Since the background is stored in a second memory group, there is no need to re-acquire it each time another spectrum analysis process is performed.

Data subtraction from previous stored data can be used to identify an unknown spectrum. This is accomplished by subtracting a known spectrum and observing whether or not the subtraction process removes the identifying peaks. The preset level (PLEV parameter, Status Page 2) which is initialized to 0, prevents underflows from occurring when subtracting one spectrum from another as any channel reaching 0 terminates acquisition and prohibits restart.

SPECTRUM COMPARISON

Data stored in up to four memory groups can be overlapped and displayed either at fixed vertical displacements (stacked) or with a common baseline (superimposed) for spectral comparison. The procedure for overlapping two memory groups at fixed vertical displacement is as follows:

1. Select group 4 as the current display group (memory group to which another memory group is to be compared).

a. Select Status Page 1.

b. Set the display cursor to the DGRP parameter using the CRSR pushbutton.

c. Enter 4 at the operand pushbutton array and depress the ENTER pushbutton.

2. Select group 3 as the overlap group (memory group to be displayed at fixed vertical displacement to the current display group).

a. Set the display cursor to the first OGRP parameter (right hand column, top line).

b. Enter 3 at the operand pushbutton array and depress the ENTER pushbutton.

3. Observe the two overlapped spectra at the display CRT. Display of the selected overlap group can be distinguished from the current display group as it has no visible markers or intensified regions.

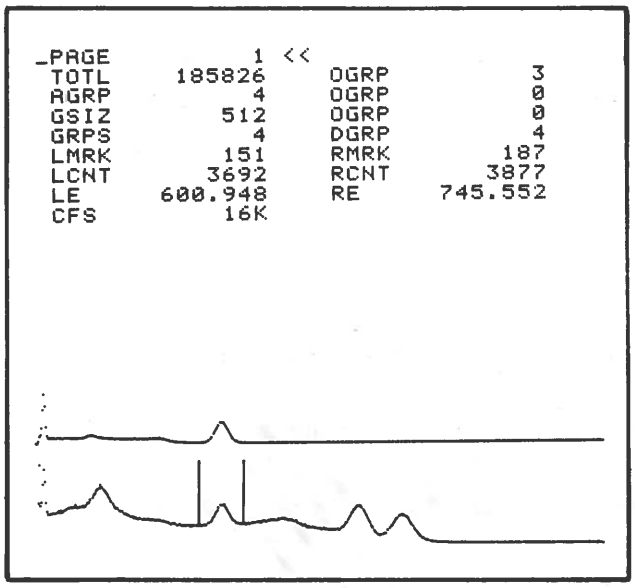

Display of Status Page 1 with 512 channel overlapped spectral data display of Co60 spectrum in overlap group 3 vertically displaced relative to Cs137 and Co60 composite spectrum in current display group 4.

NOTE: Overlapped display with a common baseline is selected by setting the display cursor to the DGRP parameter, entering minus (-) at the operand pushbutton array and then depressing the ENTER pushbutton. When overlapped display with a common baseline is selected, an "S" is displayed following the DGRP parameter to indicate suppression of the display offset. Return to overlapped display at fixed vertical displacement is selected by setting the display cursor to the DGRP parameter, entering minus (-) at the operand pushbutton array and then depressing the ENTER pushbutton.

4. Select Status Page 3 and observe the value displayed for the first D/O parameter (right hand column, second line from top). This value is the ratio of gross counts between the markers in the current display group and the overlap group. The D/O parameters are only updated when the AREA BGND pushbutton is depressed.

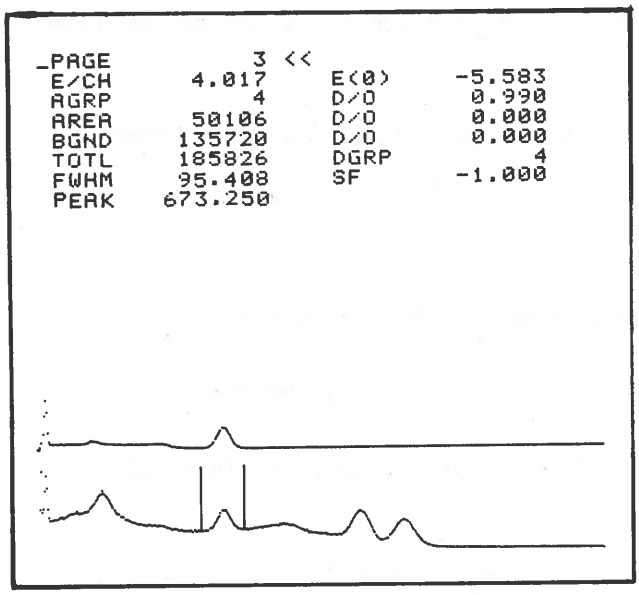

Display of Status Page 3 with 512 channel overlapped spectral data display of Co60 spectrum in overlap group 3 vertically displaced relative to Cs137 and Co60 composite spectrum in current display group 4.

NOTE: The value displayed for the D/O parameter can be changed to the ratio of net counts (total counts minus background counts) between the markers in the current display group and the overlap group by depressing the minus (-) pushbutton at the operand pushbutton array and then depress the AREA BGND pushbutton.

SPECTRUM STRIPPING

Data stored in one memory group can be multiplied by a selected strip factor and added to or subtracted from the data in any other memory group. The procedure is as follows:

1. Select group 4 as the current display group (memory group to/from which another memory group is to be added/subtracted).

a. Select Status Page 3.

b. Set the display cursor to the DGRP parameter using the CRSR pushbutton.

c. Enter 4 at the operand pushbutton array and depress the ENTER pushbutton.

2. Select -1 as the strip factor. The minus (-) specifies subtractive stripping with one (1) as the strip factor.

a. Set the display cursor to the strip factor (SF) parameter (Status Page 3) using the CRSR pushbutton.

b. Enter -1 at the operand pushbutton array and depress the ENTER pushbutton.

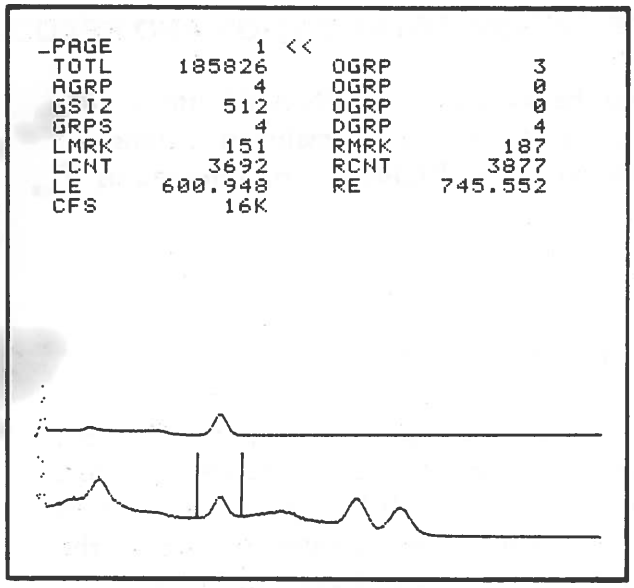

Display of Status Page 1 with 512 channel overlapped spectral data display of Co60 spectrum in overlap group 3 vertically displayed relative to Cs137 and Co60 composite spectrum in current display group 4.

3. Select the right (>>) direction using the SHIFT pushbutton.

4. Enter 3 at the operand pushbutton array to select group 3 as the strip group and depress the STRP/PLOT pushbutton. Data stored in strip group 3 is multiplied by -1 and added to the data stored in current display group 4.

NOTE: Subtractive spectrum stripping can either be specified by entering a negative (-) strip factor or by entering a minus (-) and then the strip group number at the operand pushbutton array.

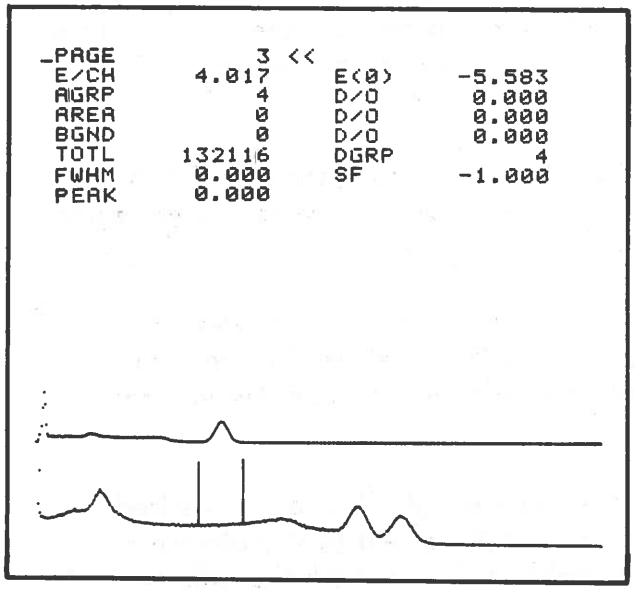

Display of Status Page 3 with 512 channel overlapped spectral data display after subtracting Co60 spectrum in overlap (strip) group 3 from Cs137 and Co60 composite spectrum in current display group 4.

REGION OF INTEREST SELECTION, INTENSIFICATION, TOTALIZATION AND READOUT

A specific region of interest can be selected using the MPOS and MSPN pushbuttons. The selected region of interest can then be entered as one of the multiple assigned regions of interest, totalized and/or readout. A specific region of the display can be selected as follows:

1. Select Status Page 1.

2. Depress the SHIFT pushbutton to select the right (>>) direction.

3. Depress the RST/ADV pushbutton to position the left and right markers at the first and last channels of the current display group. Observe the status display of the left and right marker channel numbers. The channel number of the left marker (LMRK parameter) should be 1 and the channel marker of the right marker (RMRK) parameter should be equal to the number of channels in the current display group minus one or the last channel in the current display group.

4. Depress the SHIFT pushbutton to select the right (>>) direction.

5. Hold the MPOS pushbutton depressed and observe the status display of the left marker channel number (LMRK parameter). When the left marker coincides with the left limit of the desired region of interest, release the MPOS pushbutton.

6. Depress the SHIFT pushbutton to select the left (<<) direction.

7. Hold the MSPN pushbutton depressed and observe the status display of the right marker channel number (RMRK parameter). When its channel number is approximately equal to the number of channels to be contained in the desired region of interest, release the MSPN pushbutton.

NOTE: After the desired region of interest is coarsely bracketed using the MPOS and MSPN pushbuttons, the XPND pushbutton may be depressed to expand the bracketed region to facilitate the fine adjustment of the left and right limits in steps 8 and 9.

8. If the left marker is positioned to the left or right of the left limit of the desired region, depress the SHIFT pushbutton to select the right (>>) or left (<<) direction, respectively, and depress the MPOS pushbutton until the left marker coincides with the left limit.

9. If the right marker is positioned to the left or right of the right limit of the desired region, depress the SHIFT pushbutton to select the right (>>) or left (< <) direction, respectively, and depress the MSPN until the right marker coincides with the right limit.

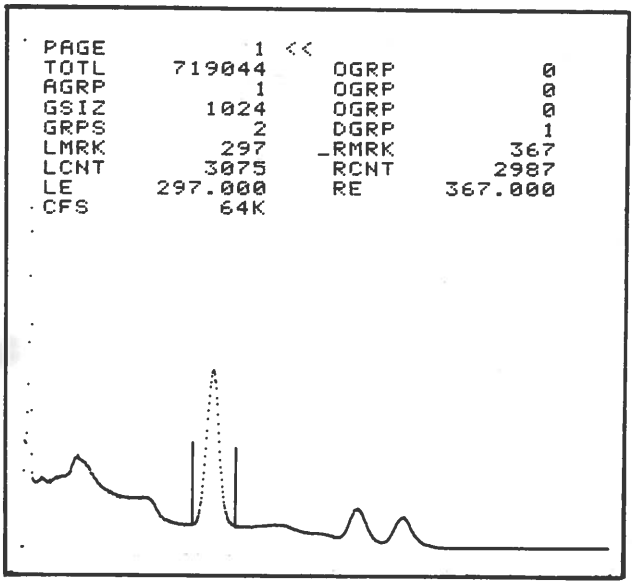

Display of Status Page 1 and 1024 channel Cs137 and Co60 composite spectrum after positioning left and right markers at the left and right limits of Cs137 photopeak, respectively.

NOTE: The left and right markers can be set directly to any specified channel or energy value by positioning the display cursor to the respective marker channel (LMRK or RMRK parameter) or marker energy (LE and RE parameters), entering the desired channel number or energy value at the operand pushbutton array, and then depressing the ENTER pushbutton.

The selected region of interest can be entered as one of the multiple assigned regions of interest as follows:

1. Depress the SHIFT pushbutton to select the right (>>) direction.

2. Depress the INT/DEL pushbutton. This intensifies the display of the channels within the selected region of interest (between the markers), assigning the channels as a region of interest. The channels will remain assigned as a region (intensified) even though the markers are subsequently moved.

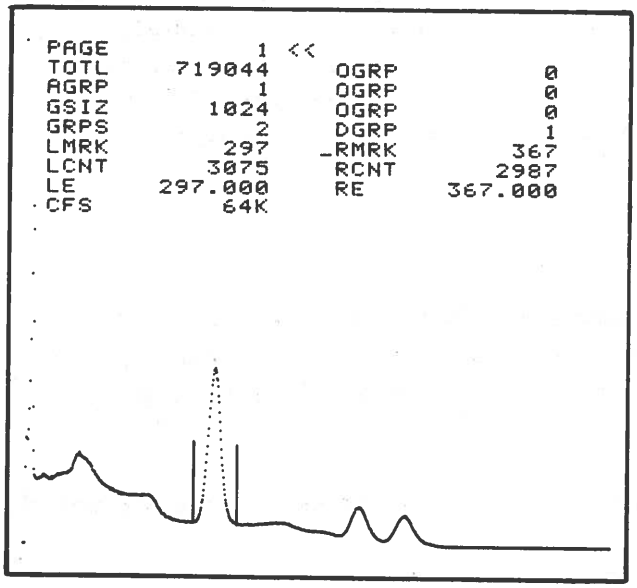

Display of Status Page 1 and 1024 channel Cs137 and Co60 composite spectrum after selecting and intensifying the first region of interest (Cs137 photopeak).

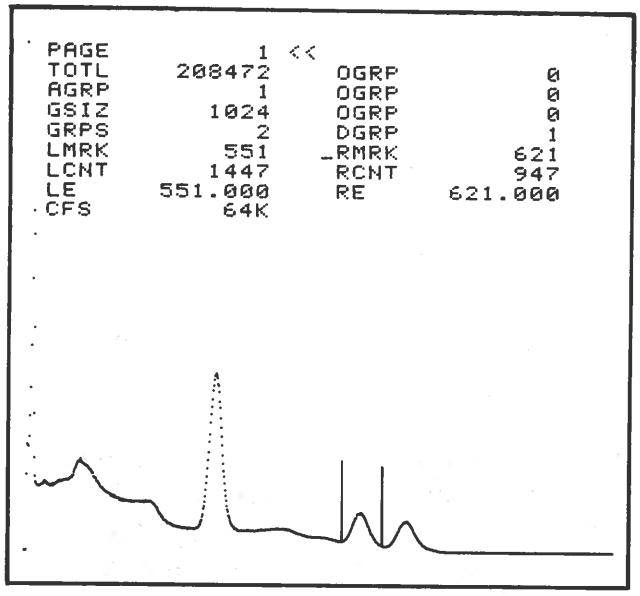

Display of Status Page 1 and 1024 channel Cs137 and Co60 composite spectrum after selecting and intensifying the second region of interest (first Co60 photopeak).

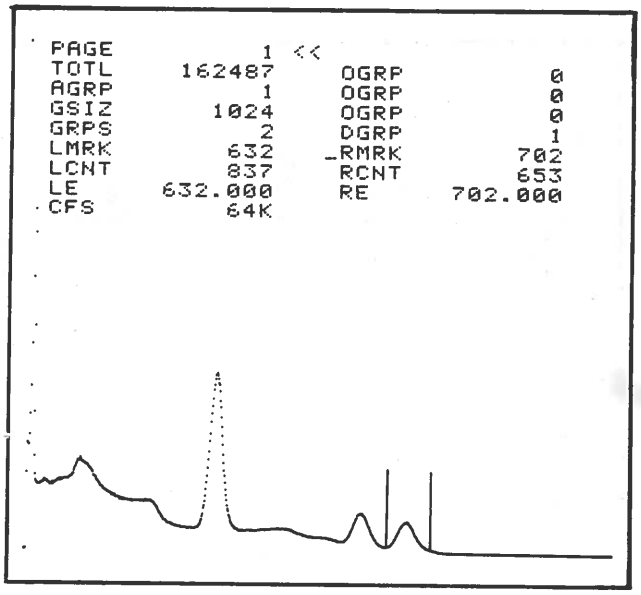

Display of Status Page 1 and 1024 channel Cs137 and Co60 composite spectrum after selecting and intensifying the third region of interest (second Co60 photopeak).

3. To remove the intensified channels from the display, bracket the channels with the markers, depress the SHIFT pushbutton to select the left (<<) direction and depress the INT/DEL pushbutton. The markers can be set to bracket all regions by depressing the SHIFT pushbutton to select the right (>>) direction and then depressing the RST/ADV pushbutton, or sequentially advanced to bracket any single region by depressing the SHIFT pushbutton to select the left (<<) direction and then depressing the RST/ADV pushbutton.

The total counts in the channels within the region of interest currently bracketed by the markers are displayed for the TOTL parameter (Status Page 1, 2, or 3). The total counts in each region is quickly determined by depressing the SHIFT pushbutton to select the left (<<) direction, depressing the RST/ADV pushbutton and observing the TOTL parameter as markers are advanced to each assigned region in ascending energy sequence. The net area (total counts minus background counts), the background counts, the full-width at half maximum amplitude and the peak channel energy within the region of interest bracketed by the markers can be obtained as follows:

1. Select Status Page 3.

2. Depress the AREA BGND pushbutton. This updates the display of the AREA, BGND, FWHM and PEAK parameters to reflect the net total counts (net area), background counts, the full width at half maximum amplitude and the peak channel energy within the region of interest currently bracketed by the markers.

NOTE: AREA + BGND = TOTL if acquisition is not in progress and the markers are not moved.

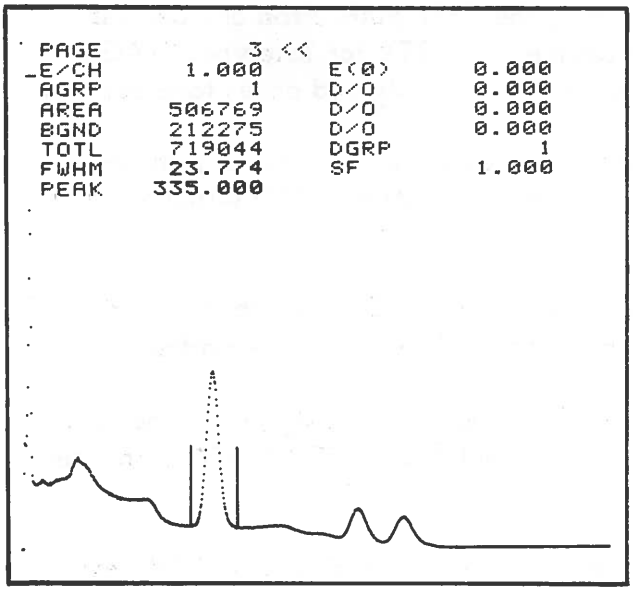

Display of Status Page 3 and 1024 channel Cs 137 and Co60 composite spectrum showing area, background, FWHM and peak energy of first intensified region (Cs 137 photopeak).

3. To update the status display to reflect the net total counts (AREA parameter), the background counts (BGND parameter), the full width at half maximum amplitude (FWHM parameter) and the peak channel energy (PEAK parameter) in the next sequential region (if more than one is assigned), depress the SHIFT pushbutton to select the left (<<) direction, depress the RST/ADV pushbutton to advance the markers to the next sequential region and then depress the AREA BGND pushbutton to update the display of the AREA, BGND, FWHM and PEAK parameters to reflect the net area, background, FWHM and peak energy within the region bracketed by the markers.

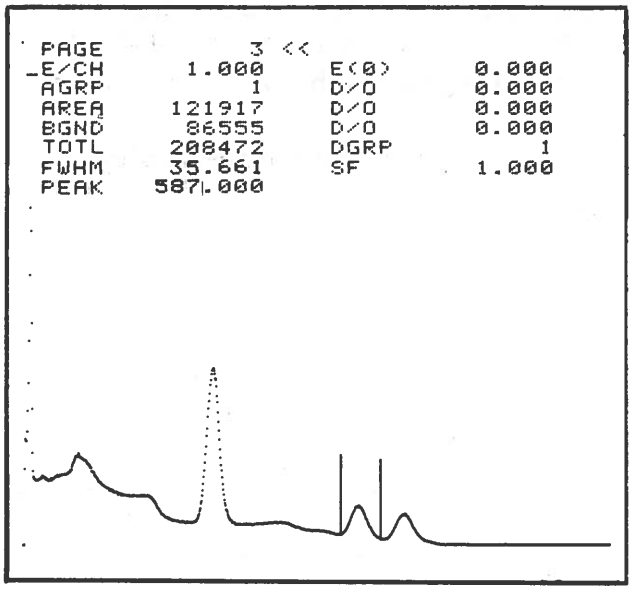

Display of Status Page 3 and 1024 channel Cs 137 and Co60 composite spectrum showing area, background, FWHM and peak energy of second intensified region (first Co60 photopeak).

The region of interest bracketed by the markers can be readout as follows:

1. Select Status Page 4.

2. Select the input/output device, mode and data for IO1 as follows:

NOTE: If IO2 is desired, substitute IO2 for IO1 in the following steps.

a. Set the display cursor to the IO1 parameter using the CRSR pushbutton and depress NXTV pushbutton to select desired input/output device code (TTY for Teletype, MAGT for 7 or 9-track magnetic tape, LP for line printer or PT for high speed paper tape punch).

b. Set the display cursor to the IO1/MODE parameter using the CRSR pushbutton and depress NXTV pushbutton to select BCDO (BCD formatted output) or BINO (binary formatted output) as desired.

c. Set the display cursor to the IO1/DATA parameter using the CRSR pushbutton and depress NXTV pushbutton to select MRKS (Content of channels between the markers).

NOTE: The content of channels in each region (if more than one is assigned) or the total counts in the channels in each region can be selected by setting the IO1/DATA parameter to ROI or TOT, respectively.

3. Depress the IO1 pushbutton. The content of each channel in the region of interest bracketed by the markers is readout to the I/O device specified for IO1.

DISPLAY EXPANSION AND POSITIONING

Display expansion is useful to permit closer examination of narrow spectral peaks such as encountered in spectra acquired using a solid state detector. It also helps in visually resolving multiple peaks of similar energies and in precisely setting regions of interest for peak integration and peak data readout.

ND600 provides two flexible methods of expanding selected segments of the spectral data display. One method uses the MPOS and MSPN pushbuttons to bracket the desired segment and the XPND pushbutton to expand the selected segment to horizontal full scale.

1. Using the MPOS and MSPN pushbuttons, bracket a desired segment of the display.

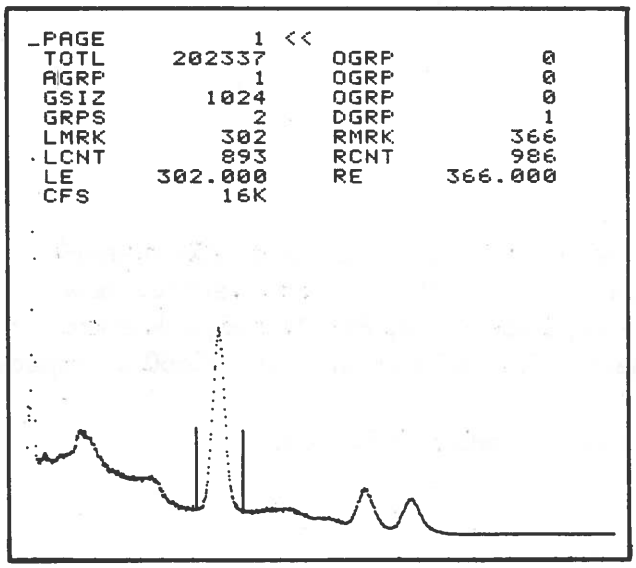

1024 channel display of Cs137 and Co60 composite spectrum after positioning the left and right markers at the left and right limits of the Cs137 photopeak, respectively.

2. Depress the XPND pushbutton to expand the bracketed segment to horizontal full scale.

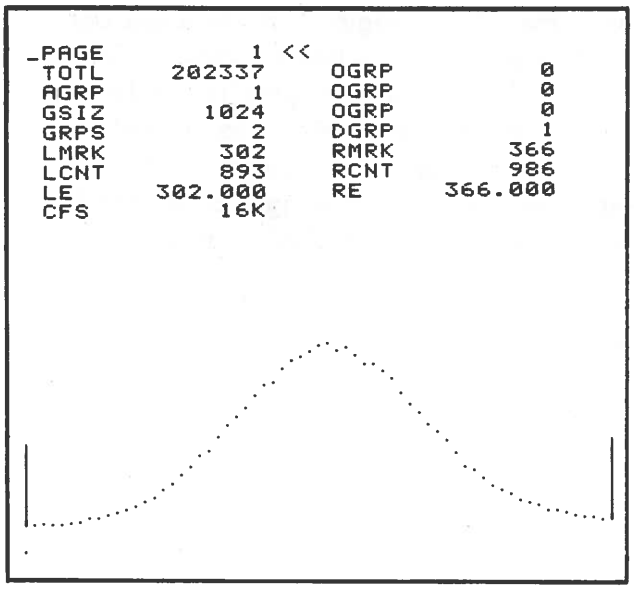

Full scale horizontal expansion of Cs137 photopeak.

3. Return the expanded display to normal (display of the full group) by depressing the XPND pushbutton a second time.

The other method uses the WDTH pushbutton to expand the display to as few as two channels full scale and the MOTN pushbutton to position the expanded segment in either direction across the entire display group.

1. Depress the SHIFT pushbutton to select the right (>>) direction and then hold the WIDTH pushbutton depressed until the desired degree of display expansion is attained. The display can be expanded to display as few as two channels full scale.

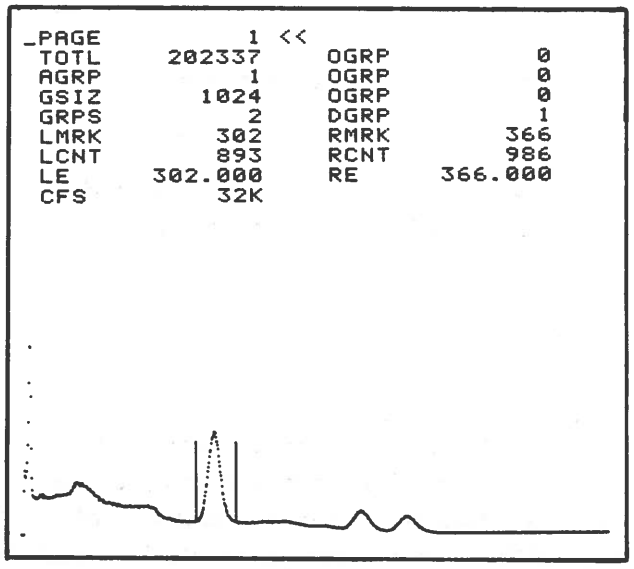

1024 channel display of Cs137 and Co60 composite spectrum with the left and right markers positioned at the left and right limits of the Cs137 photopeak, respectively.

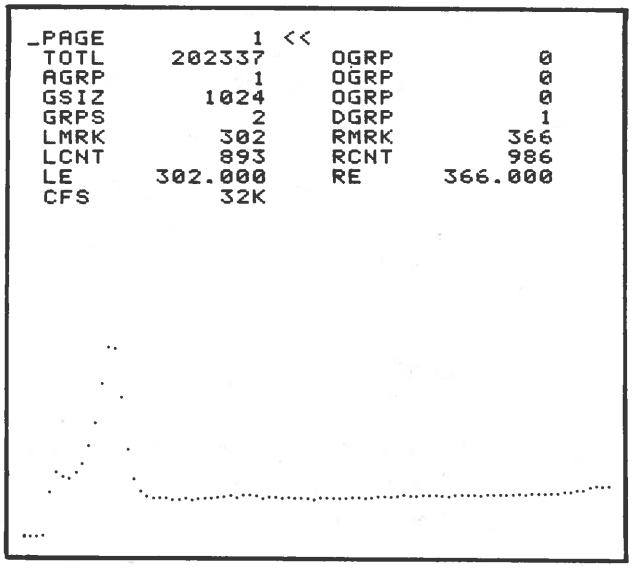

Expanded display after depressing WIDTH pushbutton. Note that display expansion has caused the marker bracketed Cs137 photopeak to move off the display.

2. Depress the MOTN pushbutton depressed until the desired segment of the expanded segment is brought into view. Depressing the MOTN pushbutton when the right (>>) direction is selected by the SHIFT pushbutton, moves the expanded display to the left across the face of the CRT to select an expanded segment to the right on the current display group. Depressing the MOTN pushbutton when the left (<<) direction is selected by the SHIFT pushbutton, moves the expanded display to the right across the face of the CRT to select an expanded segment to the left on the current display group.

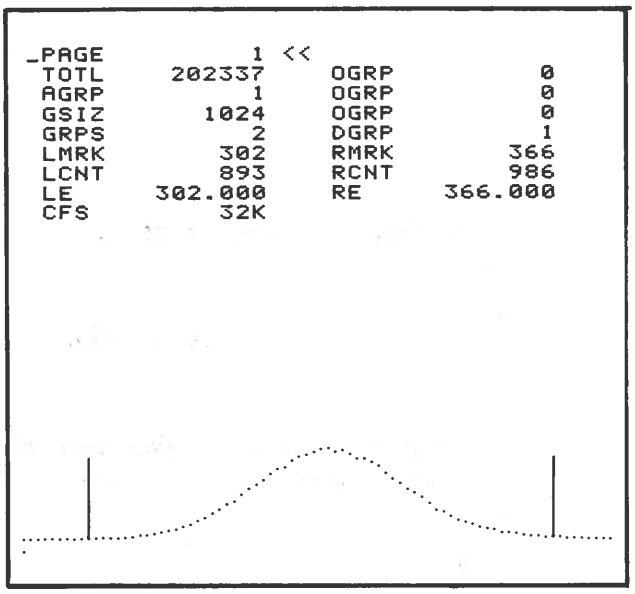

Expanded display after depressing the MOTN pushbutton to bring the expanded Cs137 photopeak into view.

3. Closely examine the expanded display to visually resolve any multiple peaks or to select a specific region of interest. The selected region of interest can then be defined for totalization or readout using the markers.

4. Return the display to normal (display of the full group) by depressing the XPND pushbutton.

Both methods allow close examination of any segment of the spectrum and can be used independently, or concurrently, such as using an expanded display to position the markers for precise region of interest selection.

SCROLL DISPLAY

The Scroll Display mode provides static CRT display of the numeric contents of up to 56 channels, starting with the left marker channel. It also provides numeric display of the contents of the channels in up to six consecutive intensified regions or the count totals in up to 12 consecutive intensified regions which are within the current marker defined portion of the spectrum. The numeric display is periodically updated as the markers are moved to select another portion of the spectrum or during data acquisition when channel contents and region totals are changing. Spectral data display simultaneous with scroll display can also be selected. Scroll display mode data is selected by the IO1/DATA parameter (Status Page 4). The procedure for selecting the scroll display mode is as follows:

1. Select the desired display group for scroll display as follows:

a. Select Status Page 1.

b. Set the display cursor to the DGRP parameter using the CRSR pushbutton.

c. Enter the desired display group number at the operand pushbutton array and depress the ENTER pushbutton.

2. Select up to 56 marker channels, the channels within up to six consecutive intensified regions within the marker defined portion of the spectrum, or the count totals in up to 12 consecutive intensified regions within the marker defined portion of the spectrum for scoll display as follows:

a. Select Status Page 4.

b. Set the display cursor to the IO1/DATA parameter using the CRSR pushbutton.

c. Depress the NXTV pushbutton to select MRKS, ROI or TOT as desired. MRKR specifies up to 56 marker channels, ROI specifies the region channels and TOT specifies the region totals.

3. Depress the SCRL pushbutton. This provides display of the numeric contents of either the marker channels, region channels or region totals as selected for the IO1/DATA parameter.

4. If spectral data display simultaneous with scroll display of numeric data is desired, momentarily depress the WIDTH pushbutton.

5. Depress the SCRL pushbutton a second time to terminate the scroll display and return to normal display.

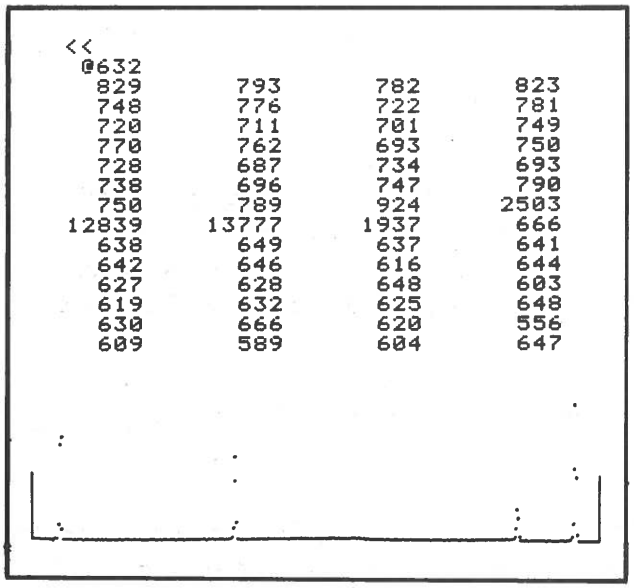

Scroll display of the numeric contents of the first 56 channels within the current marker defined portion of the spectrum. The number preceded by @ is the left marker channel number.

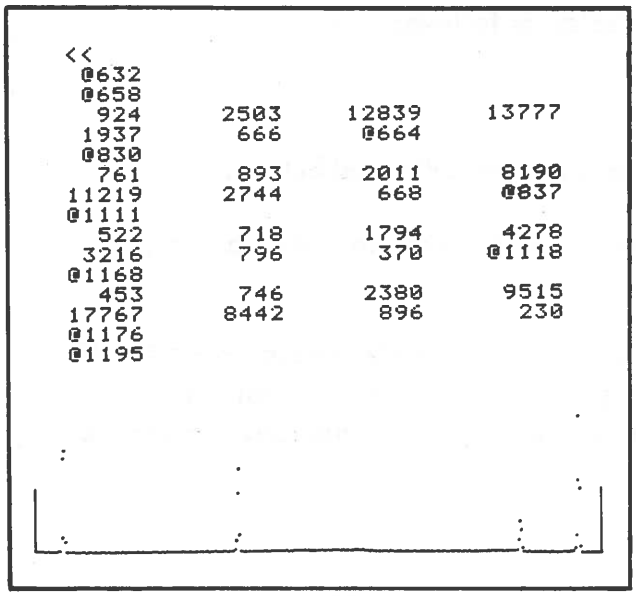

Scroll display of the numeric contents of four intensified regions within the current marker defined portion of the spectrum. The numbers preceded by @ are channel numbers (left marker, first and last channel of each region, right marker).

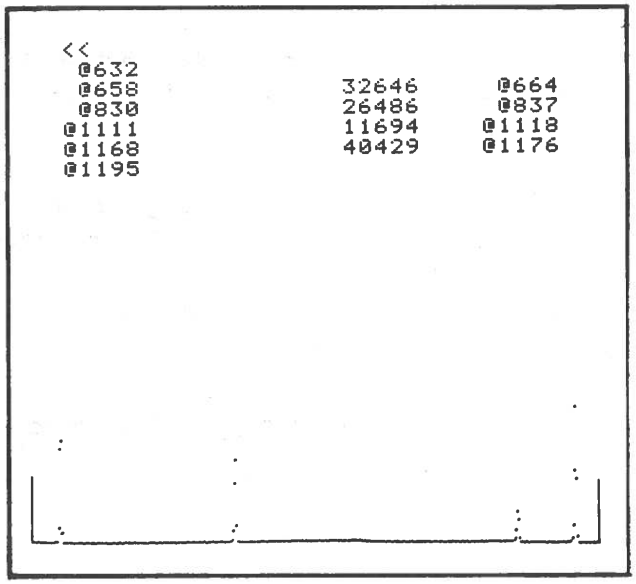

Scroll display of the total counts in four intensified regions within the current marker defined portion of the spectrum. The numbers preceded by @ are channel numbers (left marker, first and last channel of each region, right marker).

AUTOMATIC ENERGY CALIBRATION

The built-in energy calibrate function permits precise calibration of any acquired gamma energy spectrum over any energy scale. The system is initially calibrated at 1 keV per channel and automatically computes and displays the energy values of the marker channels. Thus, by selectively positioning the markers, the energy value of any peak or channel can be read directly from the display.

NOTE: The energy calibration function may be used for any calibration units, i.e, energy, time, mass, wavelength, etc.

The calibrated energy scale is based upon the known energy values for two known reference energy peaks. The known energy can be obtained from a calibration source such as Cs137 acquired before or concurrent with the unknown spectrum.

Calibration of the system for any energy scale can be performed either by selecting the energy calibrate mode or by changing the values of the E/CH and E(0) calibration parameters (Status Page 3). The energy calibrate mode is selected by depressing the

ECAL pushbutton. In this mode, calibration is performed by positioning the left and right markers at the known low and high reference energy peaks in the spectrum and then entering the known energy values for the LE and RE parameters (Status Page 1), respectively. After entry of the two known reference energies, the system computes the energy per channel (slope) and zero energy intercept (offset) and updates the display of the E/CH and E (0) parameters (Status Page 3) to the respective computed values.

The following is a procedure for energy calibration. This procedure assumes that a spectrum with several identifiable peaks has been acquired using Nuclear Spectroscopic Standards (in this case, Cs137 and Co60) and that the detector, amplifier and ADC are accurate and linear over the observed energy range. In this procedure, the 661.2 keV photopeak of Cs137 and the 1332 keV photopeak of Co60 will be used as the low and high energy reference peaks, respectively.

1. Select Status Page 1.

2. Using the MPOS and MSPN pushbuttons, position the left number at the low energy reference peak (661.2 keV) and the right marker at the high energy reference peak (1332 keV).

3. Depress the ECAL pushbutton. This causes the system to enter the energy calibrate mode as indicated by the character "E" being flashed on the display.

4. Set the display cursor to select the LE parameter using the CRSR pushbutton.

5. Enter the low energy reference value (661.2) at the operand pushbutton array and then depress the ENTER pushbutton.

6. Set the display cursor to select the RE parameter using the CRSR pushbutton.

7. Enter the high energy reference value (1332) at the operand pushbutton array and then depress the ENTER pushbutton.

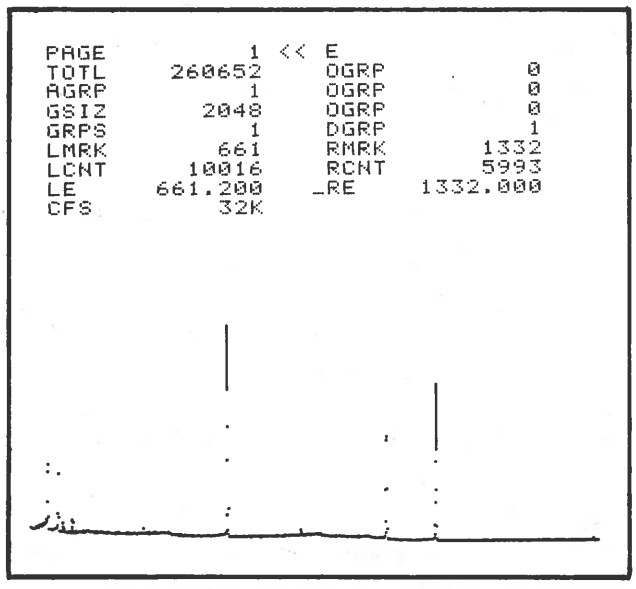

Display of Status Page 1 and 2048 channel Cs137 and Co60 composite spectrum after positioning the left and right markers at the respective low and high energy reference peaks and then entering the low (661.2 keV) and high (1332 keV) energy reference values for the LE and RE parameters, respectively.

8. Depress the ECAL pushbutton again. This exits the energy calibrate mode as indicated by removal of the flashing "E" from the display, computes the energy per channel (slope) and the zero energy intercept (offset) and updates the display of the E/CH and E (0) parameters (Status Page 3) to the respective computed values.

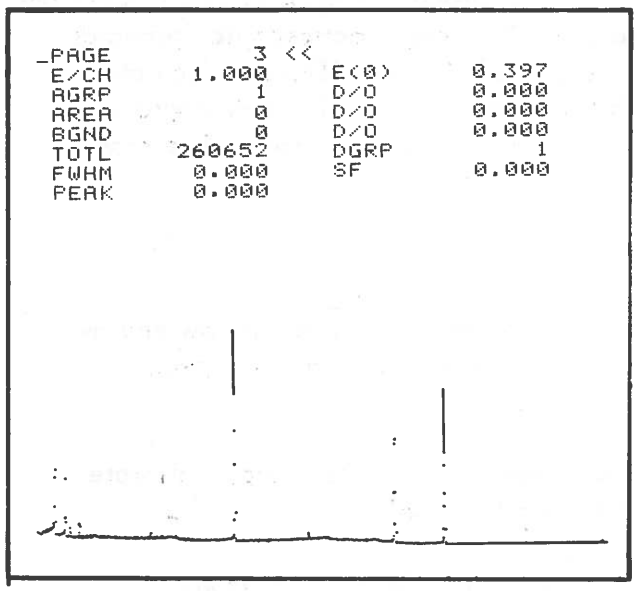

Display of Status Page 3 showing the values computed for the E/CH and E (0) parameters after performing the energy calibration procedure.

NOTE: Although the display of the E/CH and E(0) parameter only shows three digits below the decimal points, the system internally maintains seven significant digits above and below the decimal point.

9. By positioning the left or right marker to any channel in the spectrum, the energy value of that channel is computed and displayed as a Page 1 Status Parameter (LE for the left marker and RE for the right marker). The energy values computed are displayed in the energy units of the energy reference values entered. For example, if the energy reference values entered are in keV as they were in the above procedure (661.2 keV and 1332 keV), the values for the LE and RE parameter (Status Page 1) and the E/CH and E (0) parameters (Status Page 3) are displayed in keV. The energy values computed for the left and right markers are also adjusted for the digital offset selected for the DOFF parameter (Status Page 2), i.e. the digital offset is added to the respective marker channel number prior to computing its energy value.

NOTE: The left or right marker can be positioned to any channel either by using the MPOS and MSPN pushbuttons or by setting the display cursor to select either the LMRK or RMRK parameter (Status Page 1), entering the desired channel number at the operand pushbutton array and then depressing the ENTER pushbutton. The left or right marker can also be positioned to any energy value by setting the display cursor to select either the LE or RE parameter (Status Page 1), entering the desired energy value at the operand pushbutton array and then depressing the ENTER pushbutton.

The microcomputer logic automatically computes the energy per channel (slope) and the zero energy intercept (offset) based upon the values entered for the low and high energy reference peaks. The formula for calculation of the slope is as follows:

$$E/CH = \frac{\Delta E}{\Delta X} = \frac{E2-E1}{X2-X1}$$

where =

E/CH	=	energy per channel (slope)
E1	=	energy value entered for the low energy reference peak (LE parameter)
E2	=	energy value entered for the high energy reference peak (RE parameter)
X1	=	channel number of the left marker (LMRK parameter)
X2	=	channel number of the right marker (RMRK parameter)

The formula for calculation of the offset is as follows:

$$E(0) = E2-E/CH\ (X2 + D)$$

where

E (0)	=	zero energy intercept (offset), i.e., energy at channel zero.
E2	=	energy value entered for the high energy reference peak (RE parameter)
E/CH	=	energy per channel (slope) calculated above
X2	=	channel number of the right marker (RMRK parameter)
D	=	digital offset selected for the DOFF parameter (Status Page 2)

The formula for calculation of the left or right marker channel energy (LE or RE parameter) is as follows:

$$E = (X+D)\ (E/CH) + E\ (0)$$

where

E	=	energy calculated for the LE or RE parameter
X	=	channel number of the left or right marker
D	=	digital offset selected for the DOFF parameter (Status Page 2)
E/CH	=	energy per channel (slope) calculated above
E (0)	=	zero energy intercept (offset) calculated above

AUTO JOB

The Auto Job routine permits entry and execution of up to eight separate operations which can be automatically repeated from 1 to 65,535 times. Operations which can be included in the sequence are ERASE, acquire (ACR), spectrum strip (STRP), PLOT, next group (NXTG), the operational functions (F1, F2, F3, F4) or the input/output operations (IO1, IO2). The auto group, strip factor, work group, the operational functions, erase, acquire, spectrum strip, plot, next group and input/output operations, and the preset number of auto job cycles are entered using the NXTV pushbutton or via the operand pushbutton array and displayed as status parameters (Status Page 4). Execution of an auto job sequence is accomplished by depressing the AUTO pushbutton. During auto job, the system automatically displays the preset number of cycles remaining. A typical procedure for set-up and execution of an auto job sequence is as follows:

1. Select a group size of 1024 channels.

a. Select Status Page 1.

b. Set the display cursor to the GSIZ parameter using the CRSR pushbutton.

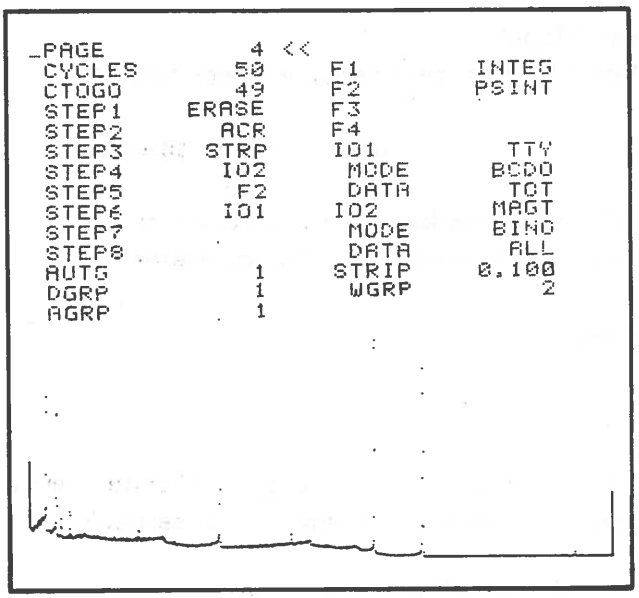

Display of Status Page 4 showing auto job set-up parameters.

c. Enter 1024 at the operand pushbutton array and then depress the ENTER pushbutton. This select two groups of 1024 channels each for a basic system memory of 2048 channels.

2. Acquire the work group spectrum in group 2 for a preset live time of 600 seconds. This spectrum will be multiplied by -0.1 and added to the spectrum in auto group 1 when the strip operation (STEP 3) is performed in the auto job sequence.

NOTE: This spectrum could represent the ambient background radiation in the absence of samples acquired at 10 times the counting time for each sample (600 seconds versus 60 seconds which will be used for auto job).

a. Select Status Page 2.

b. Set the display cursor to the MODE parameter using the CRSR pushbutton.

c. Depress the NXTV pushbutton to select PHAL.

d. Set the display cursor to the AGRP parameter using the CRSR pushbutton.

e. Depress the NXTV pushbutton to select 2 as the acquire group number.

f. Set the display cursor to the DGRP parameter using the CRSR pushbutton.

g. Depress the NXTV pushbutton to select group 2 as the display group number.

h. Set the display cursor to the TMULT parameter using the CRSR pushbutton.

i. Depress the NXTV pushbutton to select 1S (one second).

j. Set the display cursor to the PTIM parameter using the CRSR pushbutton.

k. Enter the preset time (in this case, 600) at the operand pushbutton array and then depress the ENTER pushbutton.

l. Depress the ACQ pushbutton to acquire a spectrum in group 2 for a preset live time of 600 seconds. Upon completion of 600 seconds (live time) acquisition automatically terminates.

m. Upon completion of acquisition in group 2, select a preset live time of 60 seconds for the auto job acquire (ACR) operation by entering 60 at the operand pushbutton array and then depressing the ENTER pushbutton.

3. Select Status Page 4.

4. Set the display cursor to the CYCLES parameter using the CRSR pushbutton.

5. Enter the number of auto job cycles (in this case, 50) at the operand pushbutton array and depress the ENTER pushbutton.

6. Set the display cursor to the STEP 1 parameter using the CRSR pushbutton.

7. Depress the NXTV pushbutton to select the operations to be performed for step 1 of the auto job sequence (in this case, ERASE).

8. Set the display cursor to the STEP 2 parameter using the CRSR pushbutton.

9. Depress the NXTV pushbutton to select the operation to be performed for step 2 of the auto job sequence (in this case, ACR).

NOTE: Data acquisition during auto job is performed in the mode currently selected for the MODE parameter (Status Page 2).

10. Set the display cursor to the STEP 3 parameter using the CRSR pushbutton.

11. Depress the NXTV pushbutton to select the operation to be performed for step 3 of the auto job sequence (in this case, STRP).

12. Set the display cursor to the STEP 4 parameter using the CRSR pushbutton.

13. Depress the NXTV pushbutton to select the operation to be performed for step 4 of the auto job sequence (in this case, IO2).

14. Set the display cursor to the STEP 5 parameter using the CRSR pushbutton.

15. Depress the NXTV pushbutton to select the operation to be performed for step 5 of the auto job sequence (in this case, F2).

16. Set the display cursor to the STEP 6 parameter using the CRSR pushbutton.

17. Depress the NXTV pushbutton to select the operation to be performed for step 6 of the auto job sequence (in this case, IO1).

NOTE: No operations are to be performed for step 7 and 8 of the auto job sequence, therefore the STEP 7 and STEP 8 parameters are left blank.

18. Set the display cursor to the AUTG parameter using the CRSR pushbutton.

19. Enter the auto group number (in this case, 1) at the operand pushbutton array and then depress the ENTER pushbutton.

NOTE: The auto group is the group in which all input/output and data processing operations of the auto job sequence are performed. The auto group can be entered prior to executing the auto job sequence, irregardless of the current status page, by entering the desired group number at the operand pushbutton array and then depressing the AUTO pushbutton. The auto group can also be incremented by one during execution of the auto job sequence by entering NXTG as an operation in the sequence.

20. Select peak search intensify (PSINT) as the operational function for F2.

a. Set the display cursor to the F2 parameter using the CRSR pushbutton.

b. Enter the function select code for PSINT (in this case, 502) at the operand pushbutton array and depress the ENTER pushbutton.

21. Select readout of totals in BCD format to the Teletype for IO1.

a. Set the display cursor to the IO1 parameter using the CRSR pushbutton.

b. Depress the NXTV pushbutton to select TTY.

c. Set the display cursor to the IO1/MODE parameter using the CRSR pushbutton.

d. Depress the NXTV pushbutton to select BCDO.

e. Set the display cursor to the IO1/DATA parameter using the CRSR pushbutton.

f. Depress the NXTV pushbutton to select TOT.

22. Select readout of all data in binary format to magnetic tape for IO2.

a. Set the display cursor to the IO2 parameter using the CRSR pushbutton.

b. Depress the NXTV pushbutton to select MAGT.

c. Set the display cursor to the IO2/MODE parameter using the CRSR pushbutton.

d. Depress the NXTV pushbutton to select BINO.

e. Set the display cursor to the IO2/DATA parameter using the CRSR pushbutton.

f. Depress the NXTV pushbutton to select ALL.

23. Set the display cursor to the SF parameter using the CRSR pushbutton.

24. Enter the strip factor (in this case, -0.1) at the operand pushbutton array and then depress the ENTER pushbutton.

25. Set the display cursor to the WGRP parameter using the CRSR pushbutton.

26. Enter the work group number (in this case, 2) at the operand pushbutton array and then depress the ENTER pushbutton.

27. Set the display cursor to the DGRP parameter using the CRSR pushbutton and select group 1 (which is also the auto group) for display during auto job by entering 1 at the operand pushbutton array and depressing the ENTER pushbutton.

28. Set the display cursor to the AGRP parameter using the CRSR pushbutton and select group 1 as the acquire group for auto job by entering 1 at the operand pushbutton array and depressing the ENTER pushbutton.

29. Depress the AUTO pushbutton. The system will now perform the following sequence of auto job operations and automatically repeat the sequence 50 times. Upon completion of the 50th sequence, auto job automatically terminates. Auto job can be terminated at any time by depressing the STOP pushbutton.

a. Erase auto group 1.

b. Acquire for a preset live time of 60 seconds in group 1.

c. Multiply the spectrum stored in work group 2 by 0.1 and add it to the spectrum stored in group 1 to obtain a background corrected spectrum.

d. Readout the spectrum in auto group 1 to magnetic tape.

e. Perform a peak search on the spectrum in auto group 1, intensifying each peak region and printing the peak search report at the Teletype.

f. Readout the total counts in each intensified region of auto group 1 to the Teletype.

g. Repeat steps a to f 50 times.

NOTE: The input/output and functional operations specified in this auto job sequence require that the corresponding input/output interfaces and firmware options be included in the system in order for this auto job sequence to be performed as described.

PLOTTER READOUT

The ND600 is capable of driving several types of X-Y Plotters. The following procedure describes its use with the HP7041A X-Y Plotter. It is first necessary to calibrate the X-Y Plotter before normal operation can be performed. Therefore, the calibration procedure is described prior to the normal operating procedure. These procedures assume the Initial System Set-up and Spectrum Storage procedure has been performed to verify proper system operation, i.e. all power is on and all controls are set to initial position. They further assume the X-Y Plotter is properly interconnected to the ND600, set-up for point plotting and inked. Refer to Chapter II for interconnection and the X-Y Plotter Instruction Manual for its operating characteristics.

Calibration Procedure

1. Set controls at the 7041A X-Y Plotter as follows:

a. Set the NULL DETECTOR ON/OFF switch to ON.

b. Set the NULL DETECTOR RECORDER switch to NO MUTE.

c. Set the NULL DETECTOR PLOT RATE switch to EXT.

d. Set the LINE switch to ON.

e. Place a sheet of 8.5 -in. x 11-in. or 11-in. x 17-in. plotter paper (as desired) on the X-Y Plotter.

f. When the sheet is properly aligned, set the CHART switch to HOLD.

g. Set the SCALE switch to 8.5 x 11 or 11 x 17 according to the plotter paper size being used.

h. Set the PEN switch to LIFT.

2. Select the display group to be plotted as follows:

a. Select Status Page 1.

b. Set the display cursor to the DGRP parameter using the CRSR pushbutton.

c. Enter the desired display group number at the operand pushbutton array and depress the ENTER pushbutton.

3. Depress the SHIFT pushbutton to select the left (<<) direction.

4. Depress the minus (-) pushbutton at the operand pushbutton array and then depress the STRP/PLOT pushbutton. This alternately supplies (0,0) and full scale X,Y calibration voltages to the X-Y Plotter.

5. Adjust the plotter X and Y ZERO SET and SENSITIVITY controls to position the pen cartridge at the desired (0,0) and full scale X,Y points on the recorder paper, respectively.

6. Repeat step 5 as often as necessary to attain satisfactory calibration. When satisfactory calibration is attained, depress the STRP/PLOT pushbutton again, or depress the STOP pushbutton.

Readout Procedure

1. Repeat step 2 of the Calibration Procedure to select the display group to be plotted.

2. Select the desired Status Page to be plotted with the spectral data in the current display group. If no alphanumeric status data is to be plotted, select Status Page 0.

NOTE: The numeric scroll display specified for the IO1/DATA parameter (Status Page 4) may be selected for plotting by depressing the SCRL pushbutton. Plots of both the numeric scroll display and the spectral data in the current display group can be attained by momentarily depressing the WIDTH pushbutton after depressing the SCRL pushbutton.

3. Depress the SHIFT pushbutton to select the left (<<) direction.

4. Depress the STRP/PLOT pushbutton. The current alphanumeric parameter display (current status page or scroll display) and the current spectral data display are plotted at the X-Y Plotter. Output to the X-Y plotter can be terminated at any time by depressing the STRP/PLOT pushbutton a second time.

NOTE: During plotter readout of spectral data, a marker is displayed at the channel currently being plotted.

STATUS DISPLAY INPUT/OUTPUT

Up to 36 characters of user selected information can be entered at the operand pushbutton array and displayed on any of the eight available status pages. The 36 characters can be any special parameter data which can be defined using the number (0-9) and special character (/, *, +, -, ., or &) pushbuttons of the operand pushbutton array and the ENTER pushbutton to specify a space, such as a date, time, or other numerical information the user desires to identify or label a particular experiment. The procedure for entry of information from the operand pushbutton array is as follows:

1. Select Status Page 4.

2. Set the display cursor to the IO1 parameter using the CRSR pushbutton.

3. Depress the ENTER pushbutton to "blank" the parameter value for IO1, i.e. to select the ND600 Terminal operand pushbutton array/CRT display as the input/output device for IO1.

4. Set the display cursor to the IO1/MODE parameter using the CRSR pushbutton.

5. Depress the NXTV pushbutton to select BCD1.

6. Set the display cursor to the IO1/DATA parameter using the CRSR pushbutton.

7. Depress the NXTV pushbutton to select STAT.

8. Select the Status Page on which the information entered is to be displayed (in this case, Status Page 4).

9. Depress the IO1 pushbutton. This selects the BCD readin mode to the CRT status display from the operand pushbutton array. This mode is indicated by a colon (:) and a caret (<) being flashed on the display in the two lines below the last line of alphanumeric data contained on the selected status page. After entry into this mode any sequence of pushbutton characters available on the operand pushbutton array may be entered using the ENTER

pushbutton where desired, to provide a space. For example, to enter and display a date, such as 10/30/76, sequentially depress the 1, 0, /, 3, 0, /, 7 and 6 pushbuttons at the operand pushbutton array. The information is displayed as entered in the two redundant lines. Up to 36 characters can be entered and displayed in the first line. If more than 36 characters are entered, the excess characters will overlap those previously entered, starting with the first character of the line. The second line displays up to 27 of the entered characters with excess character entries causing the first character entries in the line to shift off the display to the left.

NOTE: The two lines can be removed from the display at any time by depressing the STOP pushbutton. If the information entered and displayed in the two lines is to be retained for readout to an X-Y plotter, avoid depressing the STOP pushbutton before performing the plot operation as this will require re-entry of the information into the status display.

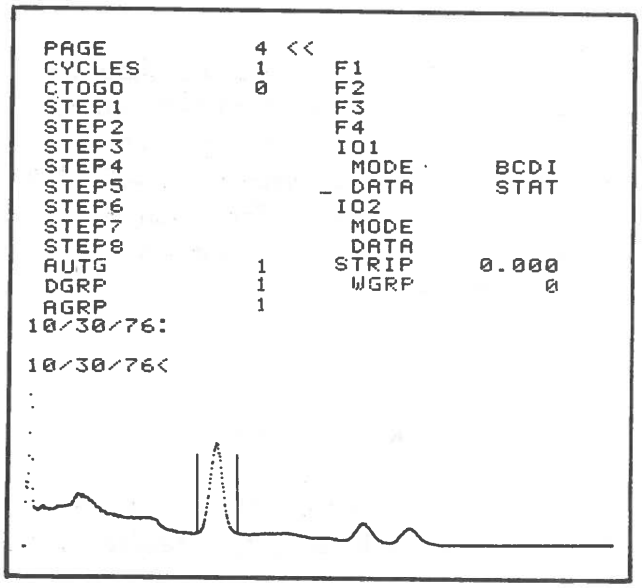

Display of Status Page 4 showing the date (10/30/76) displayed in two redundant lines after entry at the operand pushbutton array.

The operand pushbutton array can also be used to enter numerical information into any data channel or any sequential group of data channels. The procedure for inputting numerical information from the operand pushbutton array is as follows:

1. Select Status Page 4.

2. Set the display cursor to the IO1 parameter using the CRSR pushbutton.

3. Depress the ENTER pushbutton to "blank" the parameter value for IO1, i.e. to select the ND600 Terminal operand pushbutton array/CRT display as the input/output device for IO1.

4. Set the display cursor to the IO1/MODE parameter using the CRSR pushbutton.

5. Depress the NXTV pushbutton to select BCDI.

6. Set the display cursor to IO1/DATA parameter using the CRSR pushbutton.

7. Depress the NXTV pushbutton to select MRKR.

8. Select Status Page 1 and set the left marker to the first channel into which numerical information is to be entered.

9. Depress the IO1 pushbutton. This selects the BCD read-in mode to the marker channels from the operand pushbutton array. This mode is indicated by a caret (<) being flashed on the display in the line below the last line of alphanumeric data contained on the selected status page.

10. Sequentially enter the numerical value for each data channel starting with the left marker channel, depressing the ENTER pushbutton after each value. For example, to enter 10, 20, 30, 40 and 50 into the first five marker defined channels respectively, enter 10 at the operand pushbutton array and depress the ENTER pushbutton; enter 20, depress ENTER; enter 30, depress ENTER; enter 40, depress ENTER; enter 50 and depress ENTER. The values are displayed as entered in the line below the last line of alphanumeric data contained on the selected status page and also as a display point in the channel in which they are entered. This mode can be exited at any time by depressing the stop pushbutton. This removes the flashing caret (<) and line of numerical entries from the display. However, the values entered into the data channels will remain until the ERASE pushbuttons are simultaneously depressed.

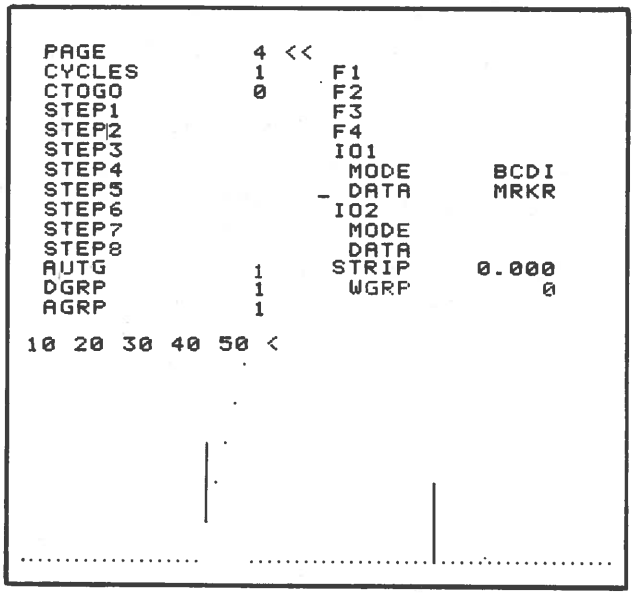

Display of Status Page 4 showing the five numerical value entries and the resultant display of the data channels between the markers.

The status display can also be specified as the output device for BCD readout of contents of all channels, the contents of the channels between the markers, the contents of the channels in each intensified region or the region totals. The procedure for selecting the status display as the BCD readout device is as follows:

NOTE: Use of the Scroll display mode is preferred to this method of BCD readout as the data presentation is more clearly formatted. However, if the user desires to visually scan through the contents of a selected group of data channels, this method is appropriate.

1. Select Status Page 4.

2. Set the display cursor to the IO1 parameter using the cursor pushbutton.

3. Depress the ENTER pushbutton to "blank" the parameter value for IO1, i.e. to select the CRT display as the input/output device for IO1.

4. Set the display cursor to the IO1/MODE parameter using the CRSR pushbutton.

5. Depress the NXTV pushbutton to select BCDO.

6. Set the display cursor to the IO1/DATA parameter using the CRSR pushbutton.

7. Depress the NXTV pushbutton to select the desired readout data (ALL, MRKR, ROI or TOT).

8. Depress the IO1 pushbutton. The contents of the data channels selected is sequentially displayed in up to six lines on the CRT with channel identification for the first channel, every 100th channel, and the last channel. After six lines are displayed, the data displayed on the first line is rolled off the CRT while the data in subsequent channels appears in the sixth line. This method of display continues until all specified data has been displayed. The CRT readout mode can be paused by depressing the minus (-) pushbutton, and then allowed to continue by depressing the minus (-) pushbutton again. The CRT readout mode can be terminated at any time by depressing the STOP pushbutton.

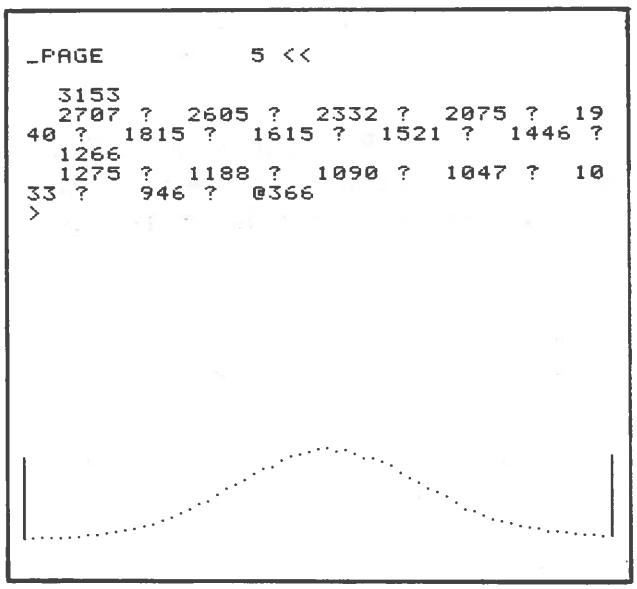

BCD readout to CRT display of marker channel contents.

CHAPTER V
ND600 DATA MANIPULATION PACKAGE (47-0054)

DESCRIPTION

The ND600 Data Manipulation Package provides the ND600 System with the following firmware controlled operational functions: Addition of a constant to, or subtraction of a constant from the data spectrum, integration, differentiation, data transfer, data smooth, square root calculation, relative error calculation, and spectrum compression. Any of the data manipulation functions can be assigned to either the F1, F2, F3 or F4 parameter (Status Page 4) by positioning the display cursor to the desired "F" parameter, entering the 3-digit select code of the selected function at the operand pushbutton array and then depressing the ENTER pushbutton. When the ENTER pushbutton is depressed, the mnemonic code of the selected function is displayed for the selected "F" parameter (Status Page 4). When any one of the data manipulation functions is assigned to a particular "F" parameter, each of the other data manipulation functions can be sequentially selected for that parameter by depressing the NXTV pushbutton. The 3-digit select code and mnemonic code for each of the data manipulation functions are as follows:

Select Code	Mnemonic Code	Function
200	ADD	Add a constant to, or subtract a constant from (i.e., add a negative constant to) each channel in the current display group.
201	INTEG	Integrate the area defined by the left and right markers in the current display group and store the integral curve in the marker defined area.
202	DIFF	Differentiate the area defined by the left and right markers in the current display group and store the differential curve in the marker defined area.

Select Code	Mnemonic Code	Function
203	XFER	Transfer the data spectrum from any specified group into the current display group.
204	SMOOTH	Perform a five-point coefficient smooth on the data spectrum in the current display group.
205	SQRT	Calculate the square root of the data spectrum in the current display group.
206	REL ERR	Calculate the relative counting error of the data spectrum in the current display group.
207	COMPRESS	Compress the data spectrum in the current display group by a factor of two.

All the data manipulation functions except ADD and XFER can be performed either by depressing the corresponding "F" pushbutton or as steps in an auto job sequence. The ADD and XFER Functions require entry of a value at the operand pushbutton array prior to depressing the "F" pushbutton, and therefore cannot be performed during auto job. The ADD function requires entry of a positive or negative (-) constant. The XFER function requires entry of the source group number. Functions selected as steps in an auto job sequence are always performed on the data spectrum in the current acquisition group rather than the current display group.

NOTE: The REL ERR function can also be performed on the data spectrum in any specified group by first entering the desired group number at the operand pushbutton array and then depressing the corresponding "F" pushbutton. The data spectrum in the specified group is first transferred to the current display group and then the REL ERR function is performed.

INSTALLATION

The ND600 Data Manipulation package consists of two 512 x 8 EPROM's (one firmware pair) which must be installed on the Firmware Option board (70-2434).

TECHNICAL SPECIFICATIONS

NUCLEAR DATA INC
Golf and Meacham Roads
Schaumburg, Illinois 60196
Telephone (312) 884-3621

ND600 Data Manipulation Package (47-0054)

The ND600 Data Manipulation Package provides the ND600 System with the following capabilities: Addition of a constant to, or subtraction of a constant from the data spectrum, integration, differentiation, data transfer, data smooth, square root calculation, relative error calculation, and spectrum compression. Any of the data manipulation functions can be assigned to any of the "F" status parameters, by entering its select code (20X). When any one of the functions is assigned to a particular "F" parameter, each of the other functions can be sequentially selected for that parameter by depressing the NXTV pushbutton.

ADD Function (200)

Adds a constant to, or subtracts a constant from (i.e., adds a negative constant to) each channel in the current display group.

INTEG Function (201)

Integrates the area defined by the left and right markers in the current display group and stores the integral curve in the marker defined area.

DIFF Function (202)

Differentiates the area defined by the left and right markers in the current display group and stores the differential curve in the marker defined area.

XFER Function (203)

Transfers the data spectrum from any specified group into the current display group.

SMOOTH Function (204)

Performs a five-point coefficient smooth on the data spectrum in the current display group.

SQRT Function (205)

Calculates the square root of the data spectrum in the current display group.

REL ERR Function (206)

Calculates the relative counting error of the data spectrum in the current display group.

COMPRESS Function (207)

Compresses the data spectrum in the current display group by a factor of two.

All the data manipulation functions except ADD and XFER can be performed either by depressing the corresponding "F" pushbutton or as steps in an auto analysis sequence. The ADD and XFER Functions require entry of a value and therefore cannot be performed during auto analysis. The ADD function requires entry of a positive or negative (—) constant. The XFER function requires entry of the source group number. Functions selected as steps in an auto analysis sequence are performed on the data spectrum in the current acquisition group rather than the current display group.

THE REL ERR function can also be performed on the data spectrum in any specified group by entering the desired group number and then depressing the corresponding "F" pushbutton. The data spectrum in the specified group is first transferred to the current display group and then the REL ERR function is performed.

The ND600 Data Manipulation package consists of two 512 x 8 EPROM's (one firmware pair) which require the Firmware Option board (70-2434) for installation.

NUCLEAR DATA INC

Specifications subject to change.
Printed in U. S. A. 10/77 PS 1033 2.5

Sales and Service Facilities United States and Canada

Atlanta, Georgia
Tel: 404/284-1747

Boston, Mass.
Tel: 617/535-5665

Cleveland, Ohio
Tel: 216/331-5145

Denver, Colorado
Tel: 303/755-6607

Los Angeles, Calif.
Tel: 714/898-7760

New York, New York
Tel: 212/962-3666

San Francisco, Calif.
Tel: 415/483-9200

Schaumburg, Illinois
Tel: 312/884-3600

Washington, D.C.
Tel: 301/345-6766

Europe

Frankfurt, Germany
Tel: 529952

London, England
Tel: 22733, 25357

Uppsala, Sweden
Tel: (018) 15-25-15

Other Sales and Service Representatives located throughout the world. Please write or call Schaumburg, Illinois for your local representative.

CHAPTER VI
ND600 INTENSIFIED REGION PEAK EXTRACTION PACKAGE (47-0055)

DESCRIPTION

The ND600 Intensified Region Peak Extraction Package provides the ND600 System with the capability of determining the peak channel, FWHM and intensity information for each intensified region of interest between the left and right markers in the current display group. Upon determining the peak channel in each region, the following information is outputted at the input/output device selected for the IO1 parameter (Status Page 4): the peak number (from left to right), the channel location of the left limit of the region, the number of channels in the region, the peak channel energy, the FWHM in energy, the background counts in the region, the area (total counts in the region minus the background counts), the percent error (square root of the area plus two times the background, divided by the area), the counts per second (area divided by current elapsed live time in seconds), and the peak to background ratio (peak channel height divided by the background height).

The intensified region peak extraction function can be assigned to either the F1, F2, F3 or F4 parameter (Status Page 4) by positioning the display cursor to the desired "F" parameter, entering its 3-digit select code (100) at the operand pushbutton array, and then depressing the ENTER pushbutton. When the ENTER pushbutton is depressed, the function's mnemonic code (XTRCT) is displayed for the selected "F" parameter (Status Page 4).

The XTRCT function can be performed either by depressing the corresponding "F" pushbutton or as a step in an auto job sequence. When the XTRCT function is selected as a step in an auto job sequence, it is performed on the data spectrum in the current acquisition group rather than the current display group. The XTRCT function can be terminated at any time by depressing the STOP pushbutton.

The following is an example of performing the XTRCT function on a 2048-channel GeLi spectrum with five previously assigned peak regions of interest. In this example, the XTRCT function was assigned to the F1 parameter (Status Page 4) and performed by depressing the F1 pushbutton with the line printer (LP) assigned to the IO1 parameter (Status Page 4) for output of the intensified region peak extraction report.

NOTE: When the IO1 parameter (Status Page 4) is blanked to select output to the CRT display, the intensified region peak extraction report is displayed following the last line of the current status page.

PN	LEFT	PW	PEAK	FWHM	BGND	AREA	%ER	CTS/SEC	PK/BGND
1	178	14	185.00	3.022	4914	22117	0.81	1843.083	19.765
2	202	10	207.00	3.057	2210	3493	2.55	291.083	4.874
3	980	18	990.00	3.391	612	6570	1.34	547.500	50.917
4	1745	14	1753.00	3.817	126	847	3.91	70.583	21.288
5	1983	13	1990.00	4.552	58	706	4.06	58.833	31.547

INSTALLATION

The Intensified Region Peak Extraction Package consists of two 512 x 8 EPROM's (one firmware pair) which must be installed on the Firmware Option board (70-2434).

TECHNICAL SPECIFICATIONS

NUCLEAR DATA INC
Golf and Meacham Roads
Schaumburg, Illinois 60196
Telephone (312) 884-3621

ND600 Intensified Region Peak Extraction Package (47-0055)

The ND600 Intensified Region Peak Extraction Package provides the ND600 System with the capability of determining the peak channel, FWHM and intensity information for each intensified region of interest between the left and right markers in the current display group. Upon determining the peak channel in each region, the following information is outputted at the IO1 device: the peak number (from left to right), the channel location of the left limit of the region, the number of channels in the region, the peak channel energy, the FWHM in energy, the background counts in the region, the area (total counts in the region minus the background counts), the percent error (square root of the area plus two times the background, divided by the area), the counts per second (area divided by current elapsed live time in seconds), and the peak to background ratio (peak channel height divided by the background height).

The intensified region peak extraction (XTRCT) function can be assigned to any of the "F" status parameters by entering its select code (100). The XTRCT function can be performed either by depressing the corresponding "F" pushbutton or as a step in an auto analysis sequence. When the XTRCT function is selected as a step on an auto analysis sequence, it is performed on the data spectrum in the current acquisition group rather than the current display group.

The Intensified Region Peak Extraction Package consists of four 512 x 8 EPROM's (two firmware pairs) which require the Firmware Option board (70-2434) for installation.

Sample Printout of Peak Extraction Report on a 2048-channel GeLi spectrum with five previously assigned peak regions of interest.

PN	LM	MW	PKE	FWHM	BGND	AREA	%ER	CTS/SEC	PK/BGND
1	178	14	185.00	3.022	4914	22117	0.81	1843.083	19.765
2	202	10	207.00	3.057	2210	3493	2.55	291.083	4.874
3	980	18	990.00	3.391	612	6570	1.34	547.500	50.917
4	1745	14	1753.00	3.817	126	847	3.91	70.583	21.288
5	1983	13	1990.00	4.552	58	706	4.06	58.833	31.547

NUCLEAR DATA INC

Specifications subject to change
Printed in U.S.A. 10/77 PS 1034 2.5

Sales and Service Facilities United States and Canada

Atlanta, Georgia
Tel: 404/284-1747

Boston, Mass.
Tel: 617/535-5665

Cleveland, Ohio
Tel: 216/331-5145

Denver, Colorado
Tel: 303/755-6607

Los Angeles, Calif.
Tel: 714/898-7760

New York, New York
Tel: 212/962-3666

San Francisco, Calif.
Tel: 415/483-9200

Schaumburg, Illinois
Tel: 312/884-3600

Washington, D.C.
Tel: 301/345-6766

Europe

Frankfurt, Germany
Tel: 529952

London, England
Tel: 22733, 25357

Uppsala, Sweden
Tel: (018) 15-25-15

Other Sales and Service Representatives located throughout the world. Please write or call Schaumburg, Illinois for your local representative.

CHAPTER VII
ND600 INTENSIFIED REGION ISOTOPE IDENTIFICATION PACKAGE (47-0056)

DESCRIPTION

The ND600 Intensified Region Isotope Identification Package provides a report identifying the isotope, half-life, energy and percent abundance for each peak determined during the intensified region peak extraction process. Each isotope is identified on the basis of finding an energy line which corresponds to the isotope in the isotope library. The intensified region isotope identification package requires that the ND600 System include the ND600 Intensified Region Peak Extraction Package (47-0055) and either the Standard or Special Isotope Library Firmware.

The Intensified Region Isotope Identification Package provides three firmware controlled operational functions: isotope identification setup, output isotope identification report, and list isotope library table. Any of the intensified region isotope identification functions can be assigned to either the F1, F2, F3 or F4 parameter (Status Page 4) by positioning the display cursor to the desired "F" parameter, entering the 3-digit select code of the selected function at the operand pushbutton array and then depressing the ENTER pushbutton. When the ENTER pushbutton is depressed, the mnemonic code of the selected function is displayed for the selected "F" parameter (Status Page 4). When anyone of the intensified region isotope identification functions is assigned to a particular "F" parameter, each of the other intensified region isotope identification functions can be sequentially selected for that parameter by depressing the NXTV pushbutton. The 3-digit select code and mnemonic code for each of the intensified region isotope identification functions are as follows:

Select Code	Mnemonic Code	Function
400	SETUP ID	Permits entering a value in keV which represents an acceptable tolerance (±) between the calculated energy and the actual energy listed in the isotope library when generating an isotope identification report.

Select Code	Mnemonic Code	Function
401	ID	Outputs the intensified region peak extraction report and then the intensified region isotope identification report at the input/output device selected for the IO1 parameter (Status Page 4).
402	LIST TAB	Lists the isotope library table at the input/output device selected for the IO1 parameter (Status Page 4).

The SETUP ID function is selected for the F1 parameter (Status Page 4) and performed as follows:

1. Select Status Page 4.

2. Set the display cursor to the F1 parameter using the CRSR pushbutton.

3. Enter 400 at the operand pushbutton array and depress the ENTER pushbutton. SETUP ID is displayed for the F1 parameter.

4. Set the display cursor to the PAGE parameter using the CRSR pushbutton.

5. Enter 7 at the operand pushbutton array and depress the ENTER pushbutton. Status Page 7 is displayed.

6. Depress the SHIFT pushbutton to select the right (>>) direction and depress the F1/F2 pushbutton. The set-up intensified region isotope identification parameters are displayed as follows:

```
_PAGE          7 >>              IRID
 TOL       2.000
```

NOTE: The energy tolerance is initialized to 2.000 keV when power is applied, but can be changed to any value desired. For example, to change the energy tolerance to 1.5 keV perform the following:

7. Set the display cursor to the TOL parameter using the CRSR pushbutton.

8. Enter 1.5 at the operand pushbutton array and depress the ENTER pushbutton. 1.500 is displayed for the TOL parameter.

NOTE: After entering the desired energy tolerance, the system is ready to perform the ID function. The ID function can be selected for the F1 parameter by depressing the NXTV pushbutton or for any other "F" parameter by entering its 3 digit select code at the operand pushbutton array and then depressing the ENTER pushbutton.

The ID function can be performed either by depressing the corresponding "F" pushbutton or as a step in an auto job sequence. When the ID function is selected as a step in an auto job sequence, it is performed on the data spectrum in the current acquisition group rather than the current display group. The ID function can be terminated at any time by depressing the STOP pushbutton.

The following is an example of performing the ID function on a 2048-channel GeLi spectrum with five previously assigned peak regions of interest. In this example, the ID function was assigned to the F1 parameter (Status Page 4) and performed by depressing the F1 pushbutton with the line printer (LP) assigned to the IO1 parameter (Status Page 4) for output of the intensified region peak extraction report and then the intensified region isotope identification report.

NOTE: When the IO1 parameter (Status Page 4) is blanked to select the CRT display, the two reports are displayed following the last line of the current status page.

PN	LEFT	PW	PEAK	FWHM	BGND	AREA	%ER	CTS/SEC	PK/BGND
1	178	14	122.65	2.026	6937	30612	0.69	1800.706	19.380
2	202	10	137.39	2.033	3080	4846	2.16	285.059	4.767
3	980	18	662.00	2.303	918	9078	1.15	534.000	46.136
4	1745	14	1173.21	2.457	189	1159	3.38	68.176	19.777
5	1983	13	1332.00	2.916	104	976	3.53	57.412	26.553

ISOTOPE	HLIFE	ENERGY	%ABUND
CO-57	272.40D	122.100	85.60
		136.400	11.10
CO-60	5.26Y	1173.200	99.90
		1332.500	100.00
SE-75	120.40D	136.000	57.00
CS-137	30.00Y	661.600	100.00
EU-152	12.70Y	121.800	37.00

The LIST TAB function is performed by depressing the corresponding "F" pushbutton. The LIST TAB function can be terminated at any time by depressing the STOP pushbutton.

The printout of the standard library table on the following pages was obtained by assigning the LIST TAB function to the F1 parameter (Status Page 4) and depressing the F1 pushbutton with the line printer (LP) assigned to the IO1 parameter (Status Page 4).

ISOTOPE	HLIFE	ENERGY	%ABUND
BE-7	53.30D	477.600	10.30
NA-22	2.60Y	1274.600	99.95
NA-24	15.00H	1368.500	100.00
		2754.100	99.85
CL-38	37.30M	1642.400	32.80
		2167.500	44.00
AR-41	1.83H	1293.600	99.00
K-40	1.26001E+09Y	1460.700	10.70
K-42	12.40H	1524.700	17.90
SC-46	83.90D	889.300	100.00
		1120.500	100.00
CR-51	27.80D	320.100	9.90
MN-54	314.00D	834.800	100.00
MN-56	2.57H	846.600	99.00
		1811.200	30.00
		2112.600	15.50
FE-59	44.60D	1099.300	56.00
		142.500	0.80
		192.200	2.80
		1291.500	44.00
CO-57	270.00D	122.100	85.60
		136.400	10.60
CO-58	71.30D	810.000	99.40
CO-60	5.26Y	1173.200	99.90
		1332.500	100.00
CU-66	5.10M	1039.200	9.00
ZN-65	244.00D	1115.400	50.60
AS-76	26.40H	559.200	43.00
		1215.800	5.00
SE-75	120.40D	264.600	59.10
		136.000	55.60
		279.600	25.00
BR-82	35.40H	776.700	83.00
		554.300	72.00
		619.100	43.00
KR-88	2.80H	196.100	37.80
		166.000	6.80
		834.700	13.00
		1529.800	11.30
RB-89	14.90M	1030.700	60.00
		658.800	10.70
		948.500	10.00
		1246.400	46.60
SR-85	64.00D	514.000	99.30
SR-91	9.70H	1024.200	33.00
		653.000	12.00
		749.800	24.00
Y-88	106.70D	898.000	93.40
		1836.100	99.40
ZR-95	65.00D	756.900	54.80
		724.200	43.60
NB-94	20000.30Y	871.000	100.00
		702.000	100.00
NB-95	35.10D	765.800	99.80

RU-103	39.60D	496.900	89.00
		610.000	5.40
RU-106	367.00D	621.800	9.80
AG-110M	260.00D	657.700	94.40
		763.800	22.60
		884.700	75.10
		937.500	34.40
		1384.200	26.10
		1505.000	14.00
CD-109	450.00D	87.800	100.00
SN-113	115.20D	391.700	100.00
SB-122	2.80D	564.000	63.00
SB-124	60.40D	1691.000	48.30
		602.600	98.20
SB-125	2.77Y	427.950	29.60
		176.290	6.30
		463.510	10.00
		600.770	18.40
		606.820	5.20
		636.150	11.20
I-131	8.04D	364.500	82.40
		284.300	5.80
		637.000	6.90
I-132	2.30H	667.700	99.20
		522.600	16.40
		630.200	14.00
		772.600	75.90
		954.500	17.90
I-133	20.30H	529.500	89.00
		875.300	4.40
I-135	6.70H	1131.600	26.80
		526.500	16.40
		1038.800	10.00
		1260.500	34.90
		1457.600	10.00
		1678.300	11.80
CS-134	2.10Y	795.800	86.00
		569.300	16.00
		604.700	98.10
CS-137	30.00Y	661.600	84.60
BA-133	7.20Y	356.200	100.00
		81.000	55.00
		276.400	12.00
		303.100	30.60
		384.100	14.20
BA-140	12.79D	537.300	23.80
		162.900	6.20
		304.900	4.50
LA-140	40.22H	1596.600	95.60
		328.600	21.00
		486.800	45.00
		815.800	23.10
		925.200	6.90

CE-139	140.00D	165.900	80.00
CE-141	32.40D	145.500	49.00
CE-144	284.00D	133.500	10.80
		696.500	1.50
SM-153	46.80H	103.200	28.40
EU-152	14.00Y	1407.900	24.30
		121.800	33.20
		344.200	31.40
		778.800	15.20
		964.000	17.30
		1086.000	10.00
		1112.000	16.40
EU-154	7.84Y	1274.800	33.60
		123.100	40.50
		723.300	19.10
		873.200	11.30
		996.300	10.70
		1004.800	17.60
EU-155	5.00Y	105.300	22.40
		86.500	33.50
HF-181	42.50D	482.200	83.00
		133.100	41.00
		345.700	12.00
W-187	23.90H	685.700	32.00
		134.200	10.10
		479.300	26.60
AU-198	2.70D	411.800	95.50
HG-203	46.60D	279.200	81.50
BI-214	16.02Y	609.300	47.00
		1120.400	17.00
		1238.300	6.00
		1764.000	17.00
RA-226	1600.02Y	609.400	43.00
		295.200	18.00
		352.000	35.00
		1120.400	14.00
		1764.700	16.60
PA-233	27.40D	311.900	38.00
		98.400	13.50
		300.100	6.60
NP-239	2.35D	277.900	12.10
		99.500	11.00
		103.700	18.00
		106.400	22.80
		228.100	9.50

INSTALLATION

The Intensified Region Isotope Identification Package consists of two 512 x 8 EPROM's (one firmware pair) which must be installed on the Firmware Option board (70-2434). The Standard Isotope Library consists of four 512 x 8 EPROM's (two firmware pairs) which must be installed on the Firmware Option board (70-2434).

NOTE: The Intensified Region Isotope Identification Package requires that the Intensified Region Peak Extraction Package (47-0055) and either the Standard or Special Isotope Library Firmware be installed on the Firmware Option board (70-2434).

CHAPTER VIII
ND600 AUTOMATIC PEAK SEARCH PACKAGE (47-0057)

The ND600 Automatic Peak Search Package automatically determines the centroid FWHM and intensity information for each peak in the marker defined portion of the data spectrum stored in the current display group. The values are determined using a peak extraction process which is based on the values entered for the full width half maximum and sensitivity parameters. Upon extraction of each peak the following information is outputted at the input/output device selected for the IO1 parameter (Status Page 4): the peak number from left to right, the channel location of the left limit of the peak, the peak width in channels, the peak centroid energy, the FWHM in energy, the background counts in the peak, the peak area (total counts in the peak minus the background counts), the percent error in the area calculation (square root of the area plus two times the background, divided by the area), and the counts per second (area divided by the current elapsed live time in seconds). In addition to output of the peak search information, the spectral display of each peak can be automatically intensified as the peak is extracted to permit visual identification of each extracted peak on the spectral display.

The Automatic Peak Search Package provides four firmware controlled operational functions: set up peak search, peak search, peak search intensify and calculate variable FWHM curve coefficients. Any of the automatic peak search functions can be assigned to either the F1, F2, F3 or F4 parameter (Status Page 4) by positioning the display cursor to the desired "F" parameter, entering the 3-digit select code of the selected function at the operand pushbuttons array and then depressing the ENTER pushbutton. When the ENTER pushbutton is depressed, the mnemonic code of the selected function is displayed for the selected "F" parameter (Status Page 4). When anyone of the automatic peak search functions is assigned to a particular "F" parameter, each of the other automatic peak search functions can be sequentially selected for that parameter by depressing the NXTV pushbutton. The 3-digit select code and mnemonic code for each automatic peak search function are as follows:

Select Code	Mnemonic Code	Function
500	SETPS	Permits entry and display of the setup peak search parameters (Status Page 7). Included are the coefficients of the variable FWHM curve, the run number, the sensitivity level, and two energy versus FWHM values for defining the variable FWHM curve.
501	PSRCH	Automatically determines the centroid, FWHM and intensity information for each peak in the marker defined portion of the data spectrum and outputs the peak search information at the input/output device selected for the IO1 parameter (Status Page 4).
502	PSINT	Automatically determines the centroid, FWHM and intensity information for each peak in the marker defined portion of the data spectrum, intensifies the spectral display of each peak, and outputs the peak search information at the input/output device selected for the IO1 parameter (Status Page 4).
503	VFWHM	Calculates the coefficients of the variable FWHM curve based on the values entered for the energy versus FWHM parameter (Status Page 7). This curve is used to improve performance when processing NaI spectral peaks.

Setup Peak Search Function

The SETPS function is selected for the F1 parameter (Status Page 4) and performed as follows:

1. Select Status Page 4.

2. Set the display cursor to the F1 parameter using the CRSR pushbutton.

3. Enter 500 at the operand pushbutton array and depress the F1 pushbutton. SET PS is displayed for the F1 parameter.

4. Set the display cursor to the PAGE parameter using the CRSR pushbutton.

5. Enter 7 at the operand pushbutton array and depress the ENTER pushbutton. Status Page 7 is displayed.

6. Depress the SHIFT pushbutton to select the right (>>) direction and depress the F1/F2 pushbutton. The setup peak search parameters are displayed as follows:

APS Status Parameter Display

```
_PAGE          7 <<              APS
 HW(0)    3.000      HW/E     0.000
 RUN          3      SENS     3.000
 EN1      0.000      HW1      3.000
 EN2      0.000      HW2      0.000
```

APS Status Parameter Descriptions

Parameter	Description
HW(0)	The HW(0) parameter is initialized to 5.000 when power is applied but can be changed to any value desired. The HW(0) parameter sets the average number of channels at the full width half maximum points of the GeLi peaks to be determined during the peak extraction process. When processing GeLi spectral peaks, an estimation of the HW(0) parameters can be obtained by observing several GeLi peaks in an expanded displayed, actually counting the number of channels at the full width half maximum points of the GeLi peaks and entering the average number for the HW(0) parameter. When processing NaI spectral peaks, the calculate variable FWHM curve coefficients function can be used to determine the HW(0) parameter (an estimate of the number of channels at the full width half maximum points of NaI peaks at channel 0 or the zero intercept of the variable FWHM curve).
HW(E)	The HW(E) parameter is initialized to 0.000 when power is applied but can be changed to any value desired. When processing GeLi spectral peaks, the HW(E) parameter is set equal to 0. When processing NaI spectral peaks, the calculate variable FWHM curve coefficients function can be used to determine the HW(E) parameter (the rate of change in the number of channels at the full width half maximum points of NaI peaks with respect to the square root of energy or the slope of the variable FWHM curve).

Parameter	Description
RUN	The run number (RUN) parameter is initially set to 0 but can be set to any number from 0 to 65,535. The currently displayed run number is incremented by one whenever the PSRCH or PSINT function is performed.
SENS	The SENS parameter is initialized to a value of 7.500 when power is applied but can be changed to any value desired. The SENS parameters sets the sensitivity level of the peak extraction process with respect to background. To increase sensitivity, i.e., to extract peaks that slightly exceed the average background content, decrease the value of the SENS parameter. Maximum sensitivity is obtained by a SENS parameter value of 1.000. To decrease sensitivity, i.e., to extract only large peaks, increase the value of the SENS parameter.
EN1, EN2 HW1, HW2	The energy (EN1, EN2) versus Full width half maximum (HW1, HW2) parameters, except the HW1 parameter, are initially set to 0. The HW1 parameter is initialized to the value of the HW(0) parameter (5.000). Values entered for these parameters define two points (EN, HW) on the variable FWHM curve.

A value for any of the APS status parameters is entered as follows:

1. Set the display cursor to the desired parameter using the CRSR pushbutton.

2. Enter an appropriate value for the selected parameter at the operand pushbutton array and depress the ENTER pushbutton. The value entered is displayed for the selected parameter.

Peak Search Function

The PSRCH function can be selected for the F1 parameter by depressing the NXTV pushbutton or for any other "F" parameter by entering its 3-digit select code (501) at the operand pushbutton array and then depressing the ENTER pushbutton.

The PSRCH function can be performed by depressing the corresponding "F" pushbutton or as a step in an auto job sequence. When the PSRCH function is selected as a step in an auto job sequence, it is performed on the data spectrum in the current auto group rather than the current display group. The PSRCH function can be terminated at any time by depressing the STOP pushbutton.

The following is an example of performing the PSRCH Function on the marker defined portion (from 21.737 to 2040.460 keV) of a 2048-channel GeLi spectrum and finding 17 peaks. In this example, the PSRCH function was assigned to the F1 parameter

(Status Page 4) and performed by depressing the F1 pushbutton with the line printer (LP) assigned to the IO1 parameter (Status Page 4) for output of the peak search report. The HW(0) parameter was set to a value of 3.000. The SENS parameter is set to a value of 3.000.

NOTE: When the IO1 parameter (Status Page 4) is blanked to select output to the CRT display, the peak search report is displayed following the last line of the current status page.

Peak Search Report

```
RUN # =            3
SRCH FRM     21.737  TO          2040.460
LT     = 1000.00000  CT     = 1017.00000
HW(0) = 3.00000000  HW/E   = 0.00000000
SENS   = 3.00000000
```

PN	LEFT	PW	CENT	FWHM	BKGND	AREA	%ER	CTS/SEC
1	82	11	87.83	1.865	17259	34958	0.75	34.95800000
2	117	9	121.94	1.740	11858	32210	0.73	32.20950000
3	131	10	136.34	1.144	11440	3905	4.19	3.905000000
4	161	9	165.73	1.918	9671	8483	1.97	8.482500000
5	251	8	254.76	1.334	7576	586	21.41	0.586000000
6	275	8	278.81	1.407	7176	437	27.83	0.437000000
7	308	5	310.33	1.659	4130	237	38.89	0.237000000
8	387	10	391.42	1.305	7535	6801	2.17	6.801000000
9	508	14	512.78	1.643	8687	1731	7.99	1.731000000
10	658	10	661.27	1.565	5950	23901	0.79	23.90100000
11	812	8	813.40	1.928	4120	427	21.80	0.427000000
12	895	10	897.65	1.843	6190	11614	1.33	11.61400000
13	1171	11	1172.88	2.285	2469	32474	0.60	32.47350000
14	1274	8	1274.29	2.524	656	32114.56		0.032000000
15	1331	11	1332.21	2.346	1062	28046	0.62	28.04550000
16	1460	11	1460.71	3.078	611	129	28.59	0.128500000
17	1836	12	1836.10	2.751	198	5539	1.39	5.539000000

```
PEAK SEARCH DONE
```

Peak Search Report Parameter Descriptions

Parameter	Description
RUN#	Current run number.
SRCH FRM/TO	Energy in keV of the left/right marker channels.
LT	Current elapsed live time in seconds.
CT	Current elapsed clock time in seconds.
HW(0)	Average number of channels at the full width half maximum points of GeLi peak or an estimate of the number of channels at the full width half maximum points of NaI peaks at channel 0 (zero intercept of the variable FWHM curve).
HW/E	Rate of change in the number of channels at the full width half maximum points of NaI peaks with respect to the square root of energy (slope of the variable FWHM curve; equals 0 for GeLi peaks).
SENS	Sensitivity level of peak extraction process with respect to background.
PN	Sequential number of peak (from left to right) within marker defined area.
LEFT	Channel location of the left limit of the peak.
PW	Peak width in channels.
CENT	Energy of peak centroid in keV.
FWHM	Full width half maximum of peak in keV.
BKGND	Background counts within peak area.
AREA	Net area (total counts minus background counts) of peak.
%ER	Percent error in area calculation determined by taking the square root of the area plus two times the background, divided by the area.
CTS/SEC	Counts per second calculated by dividing the area by the current elapsed live time in seconds.

Peak Search Intensify Function

The PSINT function can be selected for the F1 parameter by depressing the NXTV pushbutton or for any other "F" parameter by entering its 3-digit select code (502) at the operand pushbutton array and then depressing the ENTER pushbutton.

The PSINT function can be performed by depressing the corresponding "F" pushbutton or as a step in an auto job sequence. When the PSINT function is selected as a step in an auto job sequence, it is performed on the data spectrum in the current auto group rather than the current display group. The PSINT function can be terminated at any time by depressing the STOP pushbutton.

When PSINT function is performed, it outputs the automatic peak search report in the same manner as the PSRCH function. In addition, the PSINT function provides visual identification of each peak as it is extracted by automatically intensifying each peak on the spectral display.

NOTE: The PSINT function de-intensifies the channel preceding the left limit of each peak. Thus, the start channel of each peak (including dublets) can be readily identified using the RGN ADV pushbutton.

Calculate Variable FWHM Curve Coefficients Function.

The VFWHM function can be selected for the F1 parameter by depressing the NXTV push-button or for any "F" parameter by entering its 3-digit code (503) at the operand pushbutton array and then depressing the ENTER pushbutton.

The VFWHM function is performed by depressing the corresponding "F" pushbutton. When the VFWHM function is performed, it calculates and displays the values for the coefficient (HW(0), HW/E) parameters (Status Page 7) of the variable FWHM curve based on the values entered for the energy (EN1, EN2) versus full width half maximum (HW1, HW2) parameters (Status Page 7).

The formula for variable FWHM curve is:

$$HW = HW/E * \sqrt{EN} + HW(0)$$

where:

HW	=	Full width half maximum in channels.
HW/E	=	Δ HW/$\Delta \sqrt{EN}$ (rate of change in HW with respect to the square root of EN).
EN	=	Energy in keV.
HW(0)	=	Full width half maximum at channel 0.

INSTALLATION

The Automatic Peak Search Package consists of twelve 512 x 8 EPROM's (six firmware pairs) which must be installed on the Firmware Option board (70-2434).

TECHNICAL SPECIFICATIONS

NUCLEAR DATA INC
Golf and Meacham Roads
Schaumburg, Illinois 60196
Telephone (312) 884-3621

ND600 Automatic Peak Search Package (47-0057)

The ND600 Automatic Peak Search Package automatically determines the centroid FWHM and intensity information for each peak in the marker defined portion of the data spectrum stored in the current display group. The values are determined using a peak extraction process which is based on the values entered for the full width half maximum and sensitivity parameters. Upon extraction of each peak the following information is outputted at the IO1 device: the peak number from left to right, the channel location of the left limit of the peak, the peak width in channels, the peak centroid energy, the FWHM in energy, the background counts in the peak, the peak area (total counts in the peak minus the background counts), the percent error in the area calculation (square root of the area plus two times the background, divided by the area), and the counts per second (area divided by the current elapsed live time in seconds). In addition to output of the peak search information, the spectral display of each peak can be automatically intensified as the peak is extracted to permit visual identification of each extracted peak on the spectral display.

The Automatic Peak Search Package provides three functions: set up peak search, peak search and peak search intensify. Any of the functions can be assigned to any of the "F" status parameters by entering its select code (50X) and performed by depressing the corresponding "F" pushbutton. The PSRCH and the PSINT functions can also be performed as steps in an auto analysis sequence. Functions selected as steps in an auto analysis sequence are performed on the data spectrum in the current acquisition group rather than the current display group. When anyone of the functions is assigned to a particular "F" parameter, each of the other functions can be sequentially selected for that parameter by depressing the NXTV pushbutton.

SETPS Function (500)

Permits entering values for the HW and SENS parameters (Status Page 7). The HW parameter sets the average number of channels at the full width half maximum points of the peaks to be determined during the peak extraction process. The SENS parameter sets the sensitivity level of the peak extraction process with respect to background.

PSRCH Function (501)

Automatically determines the centroid, FWHM and intensity information for each peak in the marker defined portion of the data spectrum and outputs the peak search information at the IO1 device.

PSINT Function (502)

Automatically determines the centroid, FWHM and intensity information for each peak in the marker defined portion of the data spectrum, intensifies the spectral display of each peak, and outputs the peak search information at the IO1 device.

The Automatic Peak Search Package consists of twelve 512 x 8 EPROM's (six firmware pairs) which require the Firmware Option Board (70-2434) for installation.

Peak Search Report

```
SEARCH FROM     55.052   TO            1868.970
LT     =   2000.0000000  CT     =   2051.0000000
HW     =   5.0000000000  SENS   =   4.0000000000

 PN LEFT    PW     CENT   FWHM      BKGND       AREA    %ER     CTS/SEC

  1  158    31    87.65  1.08       43832      72530  0.55  36.26480000
  2  236    11   121.85  1.05       12998      64059  0.47  32.02960000
  3  266     9   136.31  1.12        8970       7817  2.05   3.908660000
  4  324    10   165.66  1.03        8958      17802  1.06   8.901000000
  5  504     7   255.04  1.23        5282       1215  8.93   0.607438000
  6  551     9   278.92  1.18        7046        892 13.72   0.445969000
  7  614     8   310.14  1.21        5622        509 21.31   0.254339000
  8  775    11   391.34  1.27        7221      13951  1.21   6.975590000
  9 1020    10   513.57  1.29        5587       2989  3.98   1.494560000
 10 1314    13   661.18  1.49        6508      48248  0.51  24.12390000
 11 1620    10   813.49  1.63        4512        891 11.17   0.445667000
 12 1786    14   897.52  1.71        8002      23059  0.86  11.52950000
 13 2334    19  1172.71  2.03        4261      64016  0.42  32.00790000
 14 2540    12  1274.22  2.18         756        197 21.01   0.098375000
 15 2620    53  1331.89  2.13        4106      56961  0.45  28.48030000
 16 2913    11  1460.05  1.85         556        172 20.79   0.086175000
 17 3660    20  1835.84  2.53          90      11412  0.94   5.706000000

TOTAL NBR PEAKS =     17
```

Peak Search Report Parameter Descriptions

SEARCH FROM/TO—Energy in keV of left/right marker channel.

LT—Current elapsed live time in seconds.

CT—Current elapsed clock time in seconds.

HW—Average number of channels at full width half maximum points of peaks to be determined during peak extraction process.

SENS—Sensitivity level of peak extraction process with respect to background.

PN—Sequential number of peak (from left to right) within marker defined area.

LEFT—Channel location of the left limit of the peak.

PW—Peak width in channels.

CENT—Energy of peak centroid in keV.

FWHM—Full width half maximum of peak in keV.

BKGND—Background counts within peak area.

AREA—Net area (total counts minus background counts) of peak.

%ER—Percent error in area calculation determined by taking the square root of the area plus two times the background, divided by the area.

CTS/SEC—Counts per second calculated by dividing the area by the current elapsed live time in seconds.

TOTAL NBR PEAKS—Total number of peaks found during automatic peak search process.

NUCLEAR DATA INC

Specifications subject to change.
Printed in U.S.A. 10/77 PS 1036 2.5

Sales and Service Facilities United States and Canada

Atlanta, Georgia
Tel: 404/284-1747

Boston, Mass.
Tel: 617/535-5665

Cleveland, Ohio
Tel: 216/331-5145

Denver, Colorado
Tel: 303/755-6607

Los Angeles, Calif.
Tel: 714/898-7760

New York, New York
Tel: 212/962-3666

San Francisco, Calif.
Tel: 415/483-9200

Schaumburg, Illinois
Tel: 312/884-3600

Washington, D.C.
Tel: 301/345-6766

Europe

Frankfurt, Germany
Tel: 529952

London, England
Tel: 22733, 25357

Uppsala, Sweden
Tel: (018) 15-25-15

Other Sales and Service Representatives located throughout the world. Please write or call Schaumburg, Illinois for your local representative.

CHAPTER IX
ND600 AUTOMATIC ISOTOPE IDENTIFICATION PACKAGE (47-0058)

DESCRIPTION

The ND600 Automatic Isotope Identification Package provides a report identifying the isotope, half-life, decay, energy, percent abundance, percent efficiency and activity for each peak determined during the automatic peak extraction process which corresponds to an energy line of an isotope in the isotope library. The automatic isotope identification package requires that the ND600 System include the ND600 Automatic Peak Search Package (47-0057) and either the Standard or Special Isotope Library Firmware.

The Automatic Isotope Identification Package provides five firmware controlled operational functions: automatic isotope identification setup, output isotope identification report, list isotope library table, calculate efficiency curve coefficients, and graph efficiency curve. Any of the automatic isotope identification functions can be assigned to either the F1, F2, F3 or F4 parameter (Status Page 4) by positioning the display cursor to the desired "F" parameter, entering the 3-digit select code of the selected function at the operand pushbutton array and then depressing the ENTER pushbutton. When the ENTER pushbutton is depressed, the mnemonic code of the selected function is displayed for the selected "F" parameter (Status Page 4). When anyone of the automatic isotope identification functions is assigned to a particular "F" parameter, each of the other automatic isotope identification functions can be sequentially selected for that parameter by depressing the NXTV pushbutton. The 3-digit select code and mnemonic code for each of the automatic isotope identification functions are as follows:

Select Code	Mnemonic Code	Function
600	AID	Permits entry and display of the isotope identification set-up parameters (Status Page 7). Included are the display and acquire group numbers, the energy break point and six energy versus efficiency values for defining a dual parabola detector efficiency curve, the coefficients of the dual parabola curve, the energy tolerance, the hold time and the sample units.

Select Code	Mnemonic Code	Function
601	ISO ID	Outputs the automatic peak search report and then the automatic isotope identification report at the input/output device selected for the IO1 parameter (Status Page 4).
602	LIST TAB	Lists the isotope library table at the input/output device selected for the IO1 parameter (Status Page 4).
603	COEFFS	Calculates the coefficients of the dual parabola detector efficiency curve based upon the values entered for the energy versus efficiency parameters (Status Page 7).
604	GRAPH	Displays a graph of the dual parabola detector efficiency curve in spectral data channels 1-N where N is any number of channels from 1 to 4096.

Automatic Isotope Identification Setup Function

The AID function is selected for the F1 parameter (Status Page 4) and performed as follows:

1. Select Status Page 4.

2. Set the display cursor to the F1 parameter using the CRSR pushbutton.

3. Enter 600 at the operand pushbutton array and depress the ENTER pushbutton. AID is displayed for the F1 parameter.

4. Set the display cursor to the PAGE parameter using the CRSR pushbutton.

5. Enter 7 at the operand pushbutton array and depress the ENTER pushbutton. Status Page 7 is displayed.

6. Depress the SHIFT pushbutton to select the right (>>) direction and depress the F1/F2 pushbutton. The automatic isotope identification set up parameters are displayed as follows:

AID Status Parameter Display

```
_PAGE          7 >>              AID
 DGRP          1     AGRP          1
 ETOL      2.000     EBP     276.0000
 EN1      87.800     EF1        4.595
 EN2     165.900     EF2        3.733
 EN3     279.200     EF3        2.053
 EN4     391.700     EF4        1.254
 EN5     661.600     EF5        0.634
 EN6    1173.200     EF6        0.337
 A1      -17.8747    A2      10.38780
 B1      6.486250    B2      -3.55073
 C1      -0.71066    C2      0.180465
 HT    350.5000D     SAM        1.000
```

AID Status Parameter Descriptions

Parameter	Description
DGRP, AGRP	The display group (DGRP) and acquire group (AGRP) parameters are initialized to group 1 when power is applied. Either can be changed to any valid group number desired. NOTE: The ISO ID function is performed on the data spectrum in the current display group when initiated by depressing the corresponding "F" pushbutton or on the data spectrum in the current acquire group when performed as a step in an auto job sequence.
ETOL	The energy tolerance (ETOL) parameter is initially set to 2.000 keV and represents an acceptable tolerance ($\pm$) between the calculated energy and the actual energy listed in the isotope library when generating the isotope identification report.
EBP	The energy break point (EBP) parameter is initialized to 350.0000 keV and defines the point at which transition from the lower to upper parabola occurs.
EN1-EN6 EF1-EF6	The energy (EN1-EN6) versus efficiency (EF1-EF6) parameters are initially set to 0. Values entered for these parameter define six points (EN, EF) on the dual parabola detector efficiency curve. The six points should be entered for ascending energy values with the second entry (EN2, EF2) having the highest efficiency of the first three. The first three points (EN1, EF1; EN2, EF2; EN3, EF3) define the lower

Parameter	Description
	parabola and therefore must be below the value of the EBP parameter. The second three entries (EN4, EF4; EN5, EF5; EN6, EF6) define the upper parabola and therefore must be above the EBP parameter (preferably above 500 keV).
A1, B1, C1 A2, B2, C2	The coefficient (A1, B1, C1, A2, B2, B2, C2) parameters are initially set to 0. If the coefficients of the lower ($A1 + B1x + C1\ x^2$) and upper ($A2 + B2x + C2x^2$) parabolas are known, the dual parabola detector efficiency curve can be defined by entering the known coefficient values for the corresponding A1, B1, C1, A2, B2 and C2 parameters. The coefficients of the dual parabola detector efficiency curve can be determined based on the values entered for the energy (EN1-EN6) versus efficiency (EF1-EF6) parameters by performing the COEFFS function.
HT	The hold time (HT) parameter is initially set to 0. The value entered for the HT parameter is the time differential in seconds (S), minutes (M), hours (H), days (D) or years (Y) between the time the analysis sample was collected and the time that data acquisition on the analysis sample was performed with the time unit (S, M, H, D or Y) selected by depressing the NXTV pushbutton. This value is converted to seconds and used in calculation of the decay listed for the identified isotopes in the isotope identification report.
SAM	The sample size (SAM) parameter is initially set to 1. The value entered for the SAM parameter is the sample size in units and must be greater than 0. This value is used in calculation of the activity in microcuries per unit of sample volume listed for the identified isotopes in the isotope identification report.

A value for any of the AID status parameters is entered as follows:

1. Set the display cursor to the desired parameter using the CRSR pushbutton.

2. Enter an appropriate value for the selected parameter at the operand pushbutton array and depress the ENTER pushbutton. The value entered is displayed for the selected parameter.

Output Isotope Identification Report Function

The ISO ID function can be selected for the F1 parameter by depressing the NXTV pushbutton or for any "F" parameter by entering its 3-digit select code (601) at the operand pushbutton array and then depressing the ENTER pushbutton.

The ISO ID function can be performed either by depressing the corresponding "F" pushbutton or as a step in an auto job sequence. When the ISO ID function is selected as a step in an auto job sequence, it is performed on the data spectrum in the current acquisition group rather than the current display group. The ISO ID function can be terminated at any time by depressing the STOP pushbutton.

The following is an example of performing the ISO ID function on the marker defined portion (from 21.737 to 2040.460 keV) of a 2048-channel GeLi spectrum. In this example, the ISO ID function was assigned to the F1 parameter (Status Page 4) and performed by depressing the F1 pushbutton with the line printer (LP) assigned to the IO1 parameter (Status Page 4) for output of the peak search report and then the isotope identification report.

NOTE: When the IO1 parameter (Status Page 4) is blanked to select the CRT display, the two reports are displayed following the last line of the current status page.

Peak Search and Isotope Identification Reports

```
RUN # =              3
SRCH FRM     21.737  TO          2040.460
LT     = 1000.00000  CT     = 1017.00000
HW(0) = 3.00000000  HW/E   = 0.00000000
SENS   = 3.00000000

 PN LEFT   PW     CENT     FWHM      BKGND      AREA    %ER     CTS/SEC

  1   82   11    87.83    1.865      17259     34958   0.75  34.95800000
  2  117    9   121.94    1.740      11858     32210   0.73  32.20950000
  3  131   10   136.34    1.144      11440      3905   4.19  3.905000000
  4  161    9   165.73    1.918       9671      8483   1.97  8.482500000
  5  251    8   254.76    1.334       7576       586  21.41  0.586000000
  6  275    8   278.81    1.407       7176       437  27.83  0.437000000
  7  308    5   310.33    1.659       4130       237  38.89  0.237000000
  8  387   10   391.42    1.305       7535      6801   2.17  6.801000000
  9  508   14   512.78    1.643       8687      1731   7.99  1.731000000
 10  658   10   661.27    1.565       5950     23901   0.79  23.90100000
 11  812    8   813.40    1.928       4120       427  21.80  0.427000000
 12  895   10   897.65    1.843       6190     11614   1.33  11.61400000
 13 1171   11  1172.88    2.285       2469     32474   0.60  32.47350000
 14 1274    8  1274.29    2.524        656     32114.56  0.032000000
 15 1331   11  1332.21    2.346       1062     28046   0.62  28.04550000
 16 1460   11. 1460.71    3.078        611       129  28.59  0.128500000
 17 1836   12  1836.10    2.751        198      5539   1.39  5.539000000

PEAK SEARCH DONE
```

ISOTOPE	HLIFE	DECAY	ENERGY	%ABUND	% EFF	UC/US
NA-22	2.60Y	7.74133E-01	1274.600	99.95	0.3105780	0.000360497
K-40	1.26001E+09Y	1.00000E+00	1460.700	10.70	0.2730360	0.011887700
CO-57	270.00D	4.06641E-01	122.100	85.60	4.4332700	0.056520600
			136.400	10.60		
CO-60	5.26Y	8.81132E-01	1173.200	99.90	0.3369990	0.292979000
			1332.500	100.00		
SE-75	120.40D		136.000	55.60		
			279.600	25.00		
KR-88	2.80H		166.000	6.80		
SR-85	64.00D	2.24574E-02	514.000	99.30	0.8696940	0.241311000
Y-88	106.70D	1.02592E-01	898.000	93.40	0.4459740	0.735042000
			1836.100	99.40		
CD-109	450.00D	5.82808E-01	87.800	100.00	4.5949700	0.035302100
SN-113	115.20D	1.21360E-01	391.700	100.00	1.2540000	0.120804000
CS-137	30.00Y	9.78057E-01	661.600	84.60	0.6339990	0.128276000
CE-139	140.00D	1.76334E-01	165.900	80.00	3.7330000	0.043523000
EU-152	14.00Y		121.800	33.20		
EU-154	7.84Y	9.18602E-01	1274.800	33.60	0.3105310	0.000899244
			123.100	40.50		
EU-155	5.00Y		86.500	33.50		
HG-203	46.60D	5.44182E-03	279.200	81.50	2.0536000	0.129651000
PA-233	27.40D	1.40969E-04	311.900	38.00	1.7396500	6.873100000
NP-239	2.35D	0.00000E+00	277.900	12.10	2.0682100	> E+37

A1	= -17.8747000000	A2	= 10.38780000000
B1	= 6.486250000000	B2	= -3.55073000000
C1	= -0.71066300000	C2	= 0.180465000000
EBP	= 276.000	ENTOL	= 2.000
HTIM	= 30283200.00000	SAM	= 1.000000000000

NOTE: The DECAY, %EFF and UC/US parameters are only computed for the prime line of each isotope, i.e., the first line entered in the library for the isotope. The upper and lower limits of computed values listed in the output report are 10^{37} and 10^{-37}, respectively. Values above or below these limits are listed as >E+37 or <E-37, respectively.

Peak Search Report Parameter Descriptions

Parameter	Description
RUN #	Current run number.
SRCH FRM/TO	Energy in keV of left/right marker channels.
LT	Current elapsed live time in seconds.
CT	Current elapsed clock time in seconds.
HW(0)	Average number of channels at the full width half maximum points of GeLi peaks or an estimate of the number of channels at the full width half maximum points of the NaI peaks at channel 0 (zero intercept of the variable FWHM curve).
HW/E	Rate of change in the number of channels at the full width half maximum points of NaI peaks with respect to the square root of energy (slope of the available FWHM curve; equals 0 for GeLi peaks).
SENS	Sensitivity level of peak extraction process with respect to background.
PN	Sequential number of peak (from left to right) within marker defined area.
LEFT	Channel location of the left limit of the peak.
PW	Peak width in channels.
CENT	Energy of peak centroid in keV.
FWHM	Full width half maximum of peak in keV.
BKGND	Background counts within peak area.
AREA	Net area (total counts minus background counts) of peak.
%ER	Percent error in area calculation determined by taking the square root of the area plus two times the background, divided by the area.
CTS/SEC	Counts per second calculated by dividing the area by the current elapsed live time in seconds.

Isotope Identification Report Parameter Descriptions

Parameter	Description
ISOTOPE	Isotope identified.
HLIFE	Half life of identified isotope in seconds (S), minutes (M), hours (H), days (D), years (Y), or billions of years (B) from Isotope Library.
DECAY	Calculated decay of identified isotope in the fraction of atoms remaining. The equation for calculation of decay (D) is as follows: $D = A/A_0 = e^{-KT}$ where A_0 = Number of radioactive nuclei at time = 0. A = Number of radioactive nuclei remaining to decay at the end of the total collection time (T): where T = $H + C$. H = Hold time in seconds. C = Elapsed clock or real time of acquisition in seconds. K = Radioactive decay constant = $\ln 2/H_L$ H_L = Half life of identified isotope in seconds.
ENERGY	Energy line of identified isotope from isotope library.
%ABUND	Percent abundance of energy line from isotope library.
%EFF	Percent efficiency of the detector at the energy line listed based on a fit to the predetermined dual parabola detector efficiency curve. The efficiency curves ($Eff = A + Bx + Cx^2$) are parabolas on log log scale, i.e., Eff = ln Eff and x = ln x. The derivation of the equation is: $Eff = e^{A + B(\ln x) + C(\ln x)^2}$ $\ln Eff = A + B(\ln x) + C(\ln x)^2$ $Eff = A + Bx + Cx^2$

UC/US

Calculated activity of identified isotope in μC per unit of sample volume. The equation for calculation of activity (α) is as follows:

$$\alpha = C\ A_p\ Ke^{K(C+H)}/LYNGV\ (e^{KC}-1)$$

where

C	=	Elapsed clock or real time of acquisition in seconds.
A_p	=	Net area of peak (total counts minus background counts.
K	=	Radioactive decay factor = $\ln 2/H_L$.
H_L	=	Half life of identified isotope in seconds.
H	=	Hold time in seconds.
L	=	Elapsed live time of acquisition in seconds.
Y	=	Abundance (% ABUND/100).
N	=	Efficiency (% EFF/100) of detector at centroid energy.
G	=	Conversion factor = 3.7×10^4 disintegrations/sec/μC.
V	=	Sample size or volume in units.

NOTE: If $KC < 10^{-8}$, the following approximation is used to calculate activity (α):

$$\alpha = Ape^{K(C+H)}/LYNGV$$

A1, B1, C1
A2, B2, C2

Coefficients of lower ($A1 + B1x + C1x^2$) and upper ($A2 + B2x + C2\ x^2$) parabolas used for determining detector efficiency.

EBP

Energy break point of dual parabola detector efficiency curve in keV.

ENTOL

Energy tolerance (+) in keV between the calculated energy and actual energy listed in the isotope library.

HTIM

Hold time in seconds between the time the analysis sample was collected and the time that data acquisition on the analysis sample was performed.

SAM

Sample size in units of volume.

List Isotope Library Table Function

The LIST TAB function can be selected for the F1 parameter by depressing the NXTV pushbutton or for any "F" parameter by entering its 3-digit select code (602) at the operand pushbutton array and then depressing the ENTER pushbutton.

The LIST TAB function is performed by depressing the corresponding "F" pushbutton. The LIST TAB function can be terminated at any time by depressing the STOP pushbutton.

The printout of the standard isotope library table on the following pages was obtained by assigning the LIST TAB function to the F1 parameter (Status Page 4) and depressing the F1 pushbutton with the line printer (LP) assigned to the IO1 parameter (Status Page 4).

ISOTOPE	HLIFE	ENERGY	%ABUND
BE-7	53.30D	477.600	10.30
NA-22	2.60Y	1274.600	99.95
NA-24	15.00H	1368.500	100.00
		2754.100	99.85
CL-38	37.30M	1642.400	32.80
		2167.500	44.00
AR-41	1.83H	1293.600	99.00
K-40	1260011520.Y	1460.700	10.70
K-42	12.40H	1524.700	17.90
SC-46	83.90D	889.300	100.00
		1120.500	100.00
CR-51	27.80D	320.100	9.90
MN-54	314.00D	834.800	100.00
MN-56	2.57H	846.600	99.00
		1811.200	30.00
		2112.600	15.50
FE-59	44.60D	1099.300	56.00
		142.500	0.80
		192.200	2.80
		1291.500	44.00
CO-57	270.00D	122.100	85.60
		136.400	10.60
CO-58	71.30D	810.000	99.40
CO-60	5.26Y	1173.200	99.90
		1332.500	100.00
CU-66	5.10M	1039.200	9.00
ZN-65	244.00D	1115.400	50.60
AS-76	26.40H	559.200	43.00
		1215.800	5.00
SE-75	120.40D	264.600	59.10
		136.000	55.60
		279.600	25.00
BR-82	35.40H	776.700	83.00
		554.300	72.00
		619.100	43.00

KR-88	2.80H	196.100	37.80
		166.000	6.80
		834.700	13.00
		1529.800	11.30
RB-89	14.90M	1030.700	60.00
		658.800	10.70
		948.500	10.00
		1246.400	46.60
SR-85	64.00D	514.000	99.30
SR-91	9.70H	1024.200	33.00
		653.000	12.00
		749.800	24.00
Y-88	106.70D	898.000	93.40
		1836.100	99.40
ZR-95	65.00D	756.900	54.80
		724.200	43.60
NB-94	20000.25Y	871.000	100.00
		702.000	100.00
NB-95	35.10D	765.800	99.80
RU-103	39.60D	496.900	89.00
		610.000	5.40
RU-106	367.00D	621.800	9.80
AG-110M	260.00D	657.700	94.40
		763.800	22.60
		884.700	75.10
		937.500	34.40
		1384.200	26.10
		1505.000	14.00
CD-109	450.00D	87.800	100.00
SN-113	115.20D	391.700	100.00
SB-122	2.80D	564.000	63.00
SB-124	60.40D	1691.000	48.30
		602.600	98.20
SB-125	2.77Y	427.950	29.60
		176.290	6.30
		463.510	10.00
		600.770	18.40
		606.820	5.20
		636.150	11.20
I-131	8.04D	364.500	82.40
		284.300	5.80
		637.000	6.90
I-132	2.30H	667.700	99.20
		522.600	16.40
		630.200	14.00
		772.600	75.90
		954.500	17.90
I-133	20.30H	529.500	89.00
		875.300	4.40
I-135	6.70H	1131.600	26.80
		526.500	16.40
		1038.800	10.00
		1260.500	34.90
		1457.600	10.00
		1678.300	11.80

CS-134	2.10Y	795.800	86.00
		569.300	16.00
		604.700	98.10
CS-137	30.00Y	661.600	84.60
BA-133	7.20Y	356.200	100.00
		81.000	55.00
		276.400	12.00
		303.100	30.60
		384.100	14.20
BA-140	12.79D	537.300	23.80
		162.900	6.20
		304.900	4.50
LA-140	40.22H	1596.600	95.60
		328.600	21.00
		486.800	45.00
		815.800	23.10
		925.200	6.90
CE-139	140.00D	165.900	80.00
CE-141	32.40D	145.500	49.00
CE-144	284.00D	133.500	10.80
		696.500	1.50
SM-153	46.80H	103.200	28.40
EU-152	14.00Y	1407.900	24.30
		121.800	33.20
		344.200	31.40
		778.800	15.20
		964.000	17.30
		1086.000	10.00
		1112.000	16.40
EU-154	7.84Y	1274.800	33.60
		123.100	40.50
		723.300	19.10
		873.200	11.30
		996.300	10.70
		1004.800	17.60
EU-155	5.00Y	105.300	22.40
		86.500	33.50
HF-181	42.50D	482.200	83.00
		133.100	41.00
		345.700	12.00
W-187	23.90H	685.700	32.00
		134.200	10.10
		479.300	26.60
AU-198	2.70D	411.800	95.50
HG-203	46.60D	279.200	81.50
BI-214	16.02Y	609.300	47.00
		1120.400	17.00
		1238.300	6.00
		1764.000	17.00
RA-226	1600.02Y	609.400	43.00
		295.200	18.00
		352.000	35.00
		1120.400	14.00
		1764.700	16.60

PA-233	27.40D	311.900	38.00
		98.400	13.50
		300.100	6.60
NP-239	2.35D	277.900	12.10
		99.500	11.00
		103.700	18.00
		106.400	22.80
		228.100	9.50

Calculate Efficiency Curve Coefficients Function

The COEFFS function can be selected for the F1 parameter by depressing the NXTV pushbutton or for any "F" parameter by entering its 3-digit select code (603) at the operand pushbutton array and then depressing the ENTER pushbutton.

The COEFFS function is performed by depressing the corresponding "F" pushbutton. When the COEFFS function is performed, it calculates and displays the values for the coefficient (A1, B1, C1, A2, B2, C2) parameters (Status Page 7) of the lower ($A1$ and $B1\,x + C1\,x^2$) and upper ($A2 + B2\,x + C2\,x^2$) parabolas based on values entered for the energy (EN1-EN6) versus efficiency (EF1-EF6) parameters (Status Page 7).

An example of Status Page 7 showing the entered and calculated values is as follows:

_PAGE	7 >>		AID
DGRP	1	AGRP	1
ETOL	2.000	EBP	276.0000
EN1	87.800	EF1	4.595
EN2	165.900	EF2	3.733
EN3	279.200	EF3	2.053
EN4	391.700	EF4	1.254
EN5	661.600	EF5	0.634
EN6	1173.200	EF6	0.337
A1	-17.8747	A2	10.38780
B1	6.486250	B2	-3.55073
C1	-0.71066	C2	0.180465
HT	350.5000D	SAM	1.000

Graph Efficiency Curve Function

The GRAPH function can be selected for the F1 parameter by depressing the NXTV pushbutton or for any "F" parameter by entering its 3-digit select code (604) at the operand pushbutton array and then depressing the ENTER pushbutton.

The GRAPH function is performed by entering a compression ratio number at the operand pushbutton array and then depressing the "F" pushbutton corresponding to the "F" parameter to which the GRAPH function is assigned. The compression ratio number can be any number from 1 to 4096 and represents the ratio between the energy scale of data spectrum display and the graph display, i.e., 1 = 1:1, 2 = 2:1, 3 = 3:1, 4 = 4:4, etc. A 1:1 compression ratio is automatically selected; therefore, entry of a 1 prior to depressing the "F" pushbutton is not required. The compression ratio number selects the number of data channels to be used for display of the graph of the energy versus efficiency curve. For example, entering 16 selects a 16:1 compression ratio or a 256-point graph for a 4096-channel spectrum (4096/16 = 256) and is adequate to provide a good graphic representation of the energy versus efficiency curve. When the GRAPH function is performed with a compression ratio of 16:1 selected, a graph of the dual parabola detector efficiency curve is plotted in the first 256 data channels starting at channel 1. Each point displayed represents energy on the horizontal (each point equalling 16 times the energy per channel) versus efficiency on the vertical (1,000,000 counts vertical = 100%).

NOTE: For an expanded display of the energy versus efficiency curve, bracket the first 256 channels of the spectral display with the markers and depress the XPND pushbutton.

INSTALLATION

The Automatic Isotope Identification Package consists of six 512 x 8 EPROM's (three firmware pairs) which must be installed on the Firmware Option board (70-2434). The Standard Isotope Library consists of four 512 x 8 EPROM's (two firmware pairs) which must be installed on the Firmware Option board (70-2434).

NOTE: The Automatic Isotope Identification Package requires that the Automatic Peak Search Package (47-0057) and either the Standard or Special Isotope Library Firmware be installed on the Firmware Option board (70-2434).

TECHNICAL SPECIFICATIONS

NUCLEAR DATA INC
Golf and Meacham Roads
Schaumburg, Illinois 60196
Telephone (312) 884-3621

ND600 Automatic Isotope Identification Package (47-0058)

The ND600 Automatic Isotope Identification Package provides a report identifying the isotope, half-life, decay, energy, percent abundance, percent efficiency and activity for each peak determined during the automatic peak extraction process which corresponds to an energy line of an isotope in the isotope library.

The Automatic Isotope Identification Package provides five functions: automatic isotope identification setup, output isotope identification report, list isotope library table, calculate efficiency curve coefficients, and graph efficiency curve. Any of the functions can be assigned to any of the "F" status parameters by entering its select code (60X) and performed by depressing the corresponding "F" pushbutton. The ISO ID function can also be performed as a step in an auto analysis sequence. When any one of the functions is assigned to a particular "F" parameter, each of the other functions can be sequentially selected for that parameter by depressing the NXTV pushbutton.

AID Function (600)

Permits entry and display of the isotope identification set-up paramters (Status Page 7). Included are the display and acquire group numbers, the run number, the energy break point and six energy versus efficiency values for defining a dual parabola detector efficiency curve, the coefficients of the dual parabola curve, the energy tolerance, the hold time and the sample units.

ISO ID Function (601)

Outputs the automatic peak search report and then the automatic isotope identification report at the IO1 device.

LIST TAB Function (602)

Lists the isotope library table at the IO1 device.

COEFFS Function (603)

Calculates the coefficients of the dual parabola detector efficiency curve based the values entered for the energy versus efficiency parameters (Status Page 7).

GRAPH Function (604)

Displays a graph of the dual parabola detector efficiency curve in spectral data channels 1-N where N is any number of channels from 1 to 4096.

The Automatic Isotope Identification Package consists of six 512 x 8 EPROM's (three firmware pairs) which require the Firmware Option board (70-2434) for installation. The Standard Isotope Library consists of four 512 x 8 EPROM's (two firmware pairs) which require the Firmware Option board (70-2434) for installation.

AID Status Parameter Display

_PAGE	7 <<		AID
DGRP	1	AGRP	1
RUN	7.000	EBP	350.0000
EN1	87.800	EF1	4.595
EN2	165.900	EF2	3.733
EN3	279.200	EF3	2.053
EN4	391.700	EF4	1.254
EN5	661.600	EF5	0.634
EN6	1173.200	EF6	0.337
A1	-17.8745	A2	10.38780
B1	6.486160	B2	-3.55073
C1	-0.71065	C2	0.180465
ETOL	1.000	HT	350.5000D
SAM	1.000		

AID Status Parameter Descriptions

DGRP, AGRP—Current display and acquire group.

RUN—Current run number.

EBP—Energy break point in keV which defines the point at which transition from the lower to upper parabola occurs.

EN1-EN6, EF1-EF6—Energy (EN1-EN6) versus efficiency (EF1-EF6) values which define six points (EN, EF) on the dual parabola detector efficiency curve.

A1, B1, C1, A2, B2, C2—Coefficients of the lower ($A1 + B1x + C1x^2$) and upper ($A2 + B2x + C2x^2$) parabolas used for determing detector efficiency.

ETOL—Energy tolerance (±) in keV between the calculated energy and the actual energy listed in the isotope library when generating the isotope identification report.

HT—Hold time in seconds (S), minutes (M), hours (H), days (D) or years (Y) between the time the analysis sample was collected and the time that data acquisitior on the analysis sample was performed.

SAM—Sample size in units of volume.

Standard Isotope Library Table (47-0082)

ISOTOPE	HLIFE	ENERGY	%ABUND
BE-7	53.30D	477.600	10.30
NA-22	2.60Y	1274.600	99.95
NA-24	15.00H	1368.500	100.00
		2754.100	99.85
CL-38	37.30M	1642.400	32.80
		2167.500	44.00
AR-41	1.83H	1293.600	99.00
K-40	1.26001E+09Y	1460.700	10.70
K-42	12.40H	1524.700	17.90
SC-46	83.90D	889.300	100.00
		1120.500	100.00
CR-51	27.80D	320.100	9.90
MN-54	314.00D	834.800	100.00
MN-56	2.57H	846.600	99.00
		1811.200	30.00
		2112.600	15.50
FE-59	44.60D	1099.300	56.00
		142.500	0.80
		192.200	2.80
		1291.500	44.00
CO-57	270.00D	122.100	85.60
		136.400	10.60
CO-58	71.30D	810.000	99.40
CO-60	5.26Y	1173.200	99.90
		1332.500	100.00
CU-66	5.10M	1039.200	9.00
ZN-65	244.00D	1115.400	50.60
AS-76	26.40H	559.200	43.00
		1215.800	5.00
SE-75	120.40D	264.600	59.10
		136.000	55.60
		279.600	25.00
BR-82	35.40H	776.700	83.00
		554.300	72.00
		619.100	43.00
KR-88	2.80H	196.100	37.80
		166.000	6.80
		834.700	13.00
		1529.800	11.30
RB-89	14.90M	1030.700	60.00
		658.800	10.70
		948.500	10.00
		1246.400	46.60
SR-85	64.00D	514.000	99.30
SR-91	9.70H	1024.200	33.00
		653.000	12.00
		749.800	24.00
Y-88	106.70D	898.000	93.40
		1836.100	99.40
ZR-95	65.00D	756.900	54.80
		724.200	43.60
NB-94	20000.30Y	871.000	100.00
		702.000	100.00
NB-95	35.10D	765.800	99.80
RU-103	39.60D	496.900	89.00
		610.000	5.40
RU-106	367.00D	621.800	9.80
AG-110M	260.00D	657.700	94.40
		763.800	22.60
		884.700	75.10
		937.500	34.40
		1384.200	26.10
		1505.000	14.00
CD-109	450.00D	87.800	100.00
SN-113	115.20D	391.700	100.00
SB-122	2.80D	564.000	63.00
SB-124	60.40D	1691.000	48.30
		602.600	98.20
I-131	8.04D	364.500	82.40
		284.300	5.80
		637.000	6.90
I-132	2.30H	667.700	99.20
		522.600	16.40
		630.200	14.00
		772.600	75.90
		954.500	17.90
I-133	20.30H	529.500	89.00
		875.300	4.40
I-135	6.70H	1131.600	26.80
		526.500	16.40
		1038.800	10.00
		1260.500	34.90
		1457.600	10.00
		1678.300	11.80
CS-134	2.10Y	795.800	86.00
		569.300	16.00
		604.700	98.10
CS-137	30.00Y	661.600	84.60
BA-133	7.20Y	356.200	100.00
		81.000	55.00
		276.400	12.00
		303.100	30.60
		384.100	14.20
BA-140	12.79D	537.300	23.80
		162.900	6.20
		304.900	4.50
LA-140	40.22H	1596.600	95.60
		328.600	21.00
		486.800	45.00
		815.800	23.10
		925.200	6.90
CE-139	140.00D	165.900	80.00
CE-141	32.40D	145.500	49.00
CE-144	284.00D	133.500	10.80
		696.500	1.50
SM-153	46.80H	103.200	28.40
EU-152	14.00Y	1407.900	24.30
		121.800	33.20
		344.200	31.40
		778.800	15.20
		964.000	17.30
		1086.000	10.00
		1112.000	16.40
EU-154	7.84Y	1274.800	33.60
		123.100	40.50
		723.300	19.10
		873.200	11.30
		996.300	10.70
		1004.800	17.60
EU-155	5.00Y	105.300	22.40
		86.500	33.50
HF-181	42.50D	482.200	83.00
		133.100	41.00
		345.700	12.00
W-187	23.90H	685.700	32.00
		134.200	10.10
		479.300	26.60
AU-198	2.70D	411.800	95.50
HG-203	46.60D	279.200	81.50
BI-214	16.02Y	609.300	47.00
		1120.400	17.00
		1238.300	6.00
		1764.000	17.00
RA-226	1600.02Y	609.400	43.00
		295.200	18.00
		352.000	35.00
		1120.400	14.00
		1764.700	16.60
PA-233	27.40D	311.900	38.00
		98.400	13.50
		300.100	6.60
NP-239	2.35D	277.900	12.10
		99.500	11.00
		103.700	18.00
		106.400	22.80
		228.100	9.50

Specifications subject to change.
Printed in U.S.A. 10/77 PS 1037 2.5

NUCLEAR DATA INC

Sales and Service Facilities United States and Canada

Atlanta, Georgia
Tel: 404/284-1747

Boston, Mass.
Tel: 617/535-5665

Cleveland, Ohio
Tel: 216/331-5145

Denver, Colorado
Tel: 303/755-6607

Los Angeles, Calif.
Tel: 714/898-7760

New York, New York
Tel: 212/962-3666

San Francisco, Calif.
Tel: 415/483-9200

Schaumburg, Illinois
Tel: 312/884-3600

Washington, D.C.
Tel: 301/345-6766

Europe

Frankfurt, Germany
Tel: 529952

London, England
Tel: 22733, 25357

Uppsala, Sweden
Tel: (018) 15-25-15

Other Sales and Service Representatives located throughout the world. Please write or call Schaumburg, Illinois for your local representative.

CHAPTER X
ND600 DIGITAL RATIOS PACKAGE (47-0071)

DESCRIPTION

The ND600 Digital Ratios Package permits monitoring up to 12 digital ratios between net areas, gross areas or combinations of net and gross areas in overlapping or non-overlapping regions in any memory group. Either the net or gross area of any region bracketed by the left and right markers can be specified as either the numerator or denominator for any of the 12 digital ratios. The ratios are dynamically computed for monitoring live during data acquisition. The package also permits generating a summary report at an optional hardcopy peripheral device.

The Digital Ratios Package provides three firmware controlled operational functions: digital ratios setup, output digital ratios list, and freeze status update. Any of the digital ratios functions can be assigned to either the F1, F2, F3 or F4 parameter (Status Page 4) by positioning the display cursor to the desired "F" parameter, entering the 3-digit select code of the selected function at the operand pushbutton array and then depressing the ENTER pushbutton. When the ENTER pushbutton is depressed, the mnemonic code of the selected function is displayed for the selected "F" parameter (Status Page 4). When any one of the digital ratios functions is assigned to a particular "F" parameter, each of the other digital ratios functions can be sequentially selected for that parameter by depressing the NXTV pushbutton. The 3-digit select code and mnemonic code for each of the digital ratios functions are as follows:

Select Code	Mnemonic Code	Function
300	DIGITAL RATIOS	Activates the DIG RATIO status display (PAGE 7) to permit specifying either the net or gross area of any region bracketed by the left and right markers as either the numerator or denominator of any of the 12 digital ratios, deleting any one or all defined ratios or restoring the markers to bracket the numerator or denominator region of any ratio.

Select Code	Mnemonic Code	Function
301	RATIO LIST	Outputs the digital ratios list at the input/output device selected for the 101 parameter (Status Page 4).
302	FREEZE	Permits visual monitoring of digital ratios during accumulation by freezing the periodic update of the status display.

INSTALLATION

The Digital Ratios Packages consists of four 512 x 8 EPROM's (two firmware pairs) which must be installed on the Firmware Option board (70-2434).

OPERATION

DIGITAL RATIOS Function

The DIGITAL RATIOS function is selected for the F1 parameter (Status Page 4) and performed as follows:

1. Select Status Page 4.

2. Set the display cursor to the F1 parameter using the CRSR pushbutton.

3. Enter 300 at the operand pushbutton array and depress the ENTER pushbutton. DIGITAL RATIOS is displayed for the F1 parameter.

4. Set the display cursor to the PAGE parameter using the CRSR pushbutton.

5. Enter 7 at the operand pushbutton array and depress the ENTER pushbutton. Status Page 7 is displayed.

6. Depress the SHIFT pushbutton to select the right (>>) direction and depress the F1/F2 pushbutton. The DIGITAL RATIOS parameters as shown and described below are displayed on Status Page 7.

DIGITAL RATIOS Status Parameter Display

```
_PAGE          7 >>          DIG RATIO
NO RATIO LMRK NUM AREA LMRK DEN AREA
 1 0.818  178N    22117  178G    27031
 2 0.612  202N     3493  202G     5703
 3 7.381  980G     7182 1745G      973
 4 0.129 1745N      847  980N     6570
 6 0.325  980G     7182  178N    22117
 7 0.266  980G     7182  178G    27031
 8 0.297  980N     6570  178N    22117
10 0.036 1745G      973  178G    27031
11 0.532  202N     3493  980N     6570
12 0.325  980G     7182  178N    22117
 LMRK          1     RMRK       2047
 DGRP          1
```

DIGITAL RATIOS Status Parameter Descriptions

Parameter	Description
NO	Ratio number 1 - 12.
RATIO	Ratio value in fixed decimal notation (0.000 to 99999).
LMRK	Numerator region left marker channel number and N or G for net or gross area; respectively.
NUM AREA	Numerator region area (1 to 10^8-1). A value of 10^8 will displace N or G character.
LMRK	Denominator region left marker channel number and N or G for net or gross area, respectively.
DEN AREA	Denominator region area (1 to 10^8-1). A value of 10^8 will displace N or G character.

Parameter	Description
LMRK	Current left marker channel number.
RMRK	Current right marker channel number.
DGRP	Current display group number.

DIGITAL RATIOS Set-up

After selecting and entering the DIGITAL RATIOS function as described above, any overlapping or non-overlapping region in any group can be selected and entered either as the numerator or denominator for any of the 12 ratios as follows:

1. Set the display cursor to the DGRP parameter using the CRSR pushbutton.

2. Enter the desired display group number at the operand pushbutton array and depress the ENTER pushbutton.

3. Bracket the desired spectral region with the markers.

NOTE: The markers can be positioned to bracket any spectral region using the MPOS and MSPN pushbutton; or by setting the display cursor first to the LMRK and then the RMRK parameter, entering the respective left and right channel number at the operand pushbutton array and depressing the ENTER pushbutton after each marker channel number entry.

4. Set the display cursor to the desired ratio NO parameter using the CRSR pushbutton.

5. Define the net or gross area of the spectral region bracketed by the markers as the numerator or denominator of the selected ratio by entering one of the following two-letter codes at the operand pushbutton array, and then depressing the ENTER pushbutton.

a. Enter NN (66) to define the net area of the spectral region as the numerator of the ratio.

b. Enter GN (46) to define the gross area of the spectral region as the numerator of the ratio.

c. Enter ND (63) to define the net area of the spectral region as the denominator of the ratio.

d. Enter GD (43) to define the gross area of the spectral region as the denominator of the spectral region.

6. Repeat steps 3, 4 and 5 to define the net or gross areas of numerator and denominator regions to each ratio desired. Up to 12 ratios can be defined and the definitions can be performed in any order desired. Peak ratios can be obtained by setting the markers to select regions of one channel width, i.e., by setting the left marker at the peak channel and the right marker in the adjacent channel. However, these regions must be defined either as the gross numerator (GN) or gross denominator (GD) of a ratio.

NOTE: If the spectral regions to be defined are located within more than one memory group, repeat steps 1 and 2 whenever a change in display group is desired.

7. Delete any defined ratio by setting the display cursor to the desired ratio NO parameter, depressing the minus (-) pushbutton and entering R (7) at the operand pushbutton array, and then depressing the ENTER pushbutton.

8. Delete all defined ratios by setting the display cursor to any ratio NO parameter, depressing the minus (-) pushbutton and entering A (2) at the operand pushbutton array, and then depressing the ENTER pushbutton.

9. Restore the markers to bracket the spectral region in any group which was originally used to define the numerator or denominator of any ratio by setting the display cursor to the desired ratio NO parameter, entering either of the following two-letter codes at the operand pushbutton array, and then depressing the ENTER pushbutton.

a. Enter RN (76) to restore the markers to bracket the numerator region of the ratio.

b. Enter RD (73) to restore the markers to bracket the denominator region of the ratio.

RATIO LIST Function

The RATIO LIST function is performed by depressing the corresponding "F" pushbutton. The RATIO LIST function can be terminated at any time by depressing the STOP pushbutton.

The following is an example of the summary report generated by the RATIO LIST function. In this example, the RATIO LIST function was assigned to the F1 parameter (Status Page 4) and performed by depressing the F1 pushbutton with line printer (LP) assigned to the IO1 parameter (Status Page 4) for output of the RATIO LIST summary report.

NOTE: When the IO1 parameter (Status Page 4) is blanked to select the CRT display, the summary report is displayed following the last line of the current status page. However, due to the number of characters per line limitation of the CRT display, the summary report will be in an overlapped and staggered array.

Summary Report

DIGITAL RATIOS

		NUMERATOR					DENOMINATOR				
NO	RATIO	GRP	LMRK	MW	PEAK N/G	AREA	GRP	LMRK	MW	PEAK N/G	AREA
1	0.131	2	42	14	51.000N	5386	2	42	14	51.000G	40995
2	0.081	2	59	12	65.000N	2295	2	59	12	65.000G	28323
3	0.818	3	50	13	57.000N	153321	3	50	13	57.000G	187426
4	0.575	4	10	10	15.000N	22931	4	10	10	15.000G	39846
5	0.896	16	22	18	30.000N	45334	16	22	18	30.000G	50617
6	0.835	28	17	16	25.000N	5695	28	17	16	25.000G	6823
7	0.916	31	59	21	70.000N	5298	31	59	21	70.000G	5781
8	0.129	31	59	21	70.000N	5298	2	42	14	51.000G	40995
9	22.05	16	22	18	30.000G	50617	2	59	12	65.000N	2295
10	35.37	3	50	13	57.000G	187426	31	59	21	70.000N	5298
11	0.204	31	59	21	70.000G	5781	2	59	12	65.000G	28323
12	0.001	2	59	12	65.000N	2295	1	12046	185.000G		2126195

Summary Report Parameter Descriptions

Parameter	Description
NO	Ratio number 1 - 12.
RATIOS	Ratio value in fixed decimal notation (0.000 - 99999).
NUMERATOR/GRP	Numerator region group number.
NUMERATOR/LMRK	Numerator region left marker channel number.
NUMERATOR/MW	Numerator region marker channel width in number of channels.
NUMERATOR/PEAK	Numerator region peak channel location in fixed decimal notation (0.001 - 9999.999).
NUMERATOR N/G	Numerator region net (N) or gross (G) area indicator.
NUMERATOR AREA	Numerator region area (1 to 10^9-1). A value of 10^9 will displace N or G indicator.

Parameter	Description
DENOMINATOR/GRP	Denominator region group number.
DENOMINATOR/LMRK	Denominator region left marker channel number.
DENOMINATOR/MW	Denominator region marker channel width in number of channels.
DENOMINATOR/PEAK	Denominator region peak channel location in fixed decimal notation (0.001 - 9999.999.)
DENOMINATOR N/G	Denominator region net (N) or gross (G) area indicator.
DENOMINATOR AREA	Denominator region area (1 to 10^9-1). A value of 10^9 will displace N or G indicator.

FREEZE Function

The FREEZE Function is performed by depressing the corresponding "F" pushbutton. When the FREEZE function is activated, it locks out the periodic update of the status display to permit live monitoring of the digital ratios during data acquisition.

CAUTION: Since the FREEZE function locks out the periodic update of the status display, care must be exercised in its use as various parameter values and system functional displays may not reflect their true current state.

The FREEZE function can be positively terminated by depressing the STOP pushbutton. If the SHIFT pushbutton is not depressed to change the direction after the FREEZE function is activated, depressing the corresponding "F" pushbutton a second time will also terminate the FREEZE function.

TECHNICAL SPECIFICATIONS

NUCLEAR DATA INC
Golf and Meacham Roads
Schaumburg, Illinois 60196
Telephone (312) 884-3621

ND600 Digital Ratios Package (47-0071)

The ND600 Digital Ratios Package permits monitoring up to 12 digital ratios between net areas, gross areas or combinations of net and gross areas in overlapping or non-overlapping regions in any memory group. Either the net or gross area of any region bracketed by the left and right markers can be specified as either the numerator or denominator for any of the 12 digital ratios. The ratios are dynamically computed for monitoring live during data acquistion. The package also permits generating a summary report at an optional hardcopy peripheral device.

The Digital Ratios Package provides three functions: digital ratios setup, output digital ratios list, and freeze status update. Any of the digital ratios functions can be assigned to any of the "F" status parameters by entering its select code (30X) and performed by depressing the corresponding "F" pushbutton. When any one of the functions is assigned to a particular "F" parameter, each of the other functions can be sequentially selected for that parameter by depressing the NXTV pushbutton.

DIG RATIO Function (300)

Activates the DIG RATIO Status Display (PAGE 7) to permit specifying either the net or gross area of any region bracketed by the left and right markers as either the numerator or denominator of any of the 12 digital ratios, deleting any one or all defined ratios or restoring the markers to bracket the numerator or denominator region of any ratio.

RATIO LIST Function (301)

Outputs the digital ratios summary report at the IO1 device.

FREEZE Function (302)

Permits visual monitoring of the digital ratios during data acquisition by freezing the periodic update of the status display.

The Digital Ratios Package consists of four 512 x 8 EPROM's (two firmware pairs) which require the Firmware Option Board (70-2434) for installation.

Digital Ratios Status Parameter Display

```
_PAGE          7 >>          DIG RATIO
NO  RATIO LMRK NUM AREA LMRK DEN AREA
 1  0.818  178N    22117  178G    27031
 2  0.612  202N     3493  202G     5703
 3  7.381  980G     7182 1745G      973
 4  0.129 1745N      847  980N     6570
 6  0.325  980G     7182  178N    22117
 7  0.266  980G     7182  178G    27031
 8  0.297  980N     6570  178N    22117
10  0.036 1745G      973  178G    27031
11  0.532  202N     3493  980N     6570
12  0.325  980G     7182  178N    22117
 LMRK          1     RMRK        2047
 DGRP          1
```

Digital Ratios Status Parameter Descriptions

NO—Ratio number 1-12.

RATIO—Ratio value in fixed decimal notation (0.000 to 99999).

LMRK—Numerator region left marker channel number and N or G for net or gross area, respectively.

NUM AREA—Numerator region area (1 to 10^8-1). A value of 10^8 will displace N or G character.

LMRK—Denominator region left marker channel number and N or G for net or gross area, respectively.

DEN AREA—Denominator region area (1 to 10^8-1). A value of 10^8 will displace N or G character.

LMRK—Current left marker channel number.

RMRK—Current right number channel number.

DGRP—Current display group number.

Digital Ratios Summary Report

DIGITAL RATIOS

		NUMERATOR					DENOMINATOR					
NO	RATIO	GRP	LMRK	MW	PEAK	N/G	AREA	GRP	LMRK	MW	PEAK	N/G	AREA
1	0.131	2	42	14	51.000	N	5386	2	42	14	51.000	G	40995
2	0.081	2	59	12	65.000	N	2295	2	59	12	65.000	G	28323
3	0.818	3	50	13	57.000	N	153321	3	50	13	57.000	G	187426
4	0.575	4	10	10	15.000	N	22931	4	10	10	15.000	G	39846
5	0.896	16	22	18	30.000	N	45334	16	22	18	30.000	G	50617
6	0.835	28	17	16	25.000	N	5695	28	17	16	25.000	G	6823
7	0.916	31	59	21	70.000	N	5298	31	59	21	70.000	G	5781
8	0.129	31	59	21	70.000	N	5298	2	42	14	51.000	G	40995
9	22.05	16	22	18	30.000	G	50617	2	59	12	65.000	N	2295
10	35.37	3	50	13	57.000	G	187426	31	59	21	70.000	N	5298
11	0.204	31	59	21	70.000	G	5781	2	59	12	65.000	G	28323
12	0.001	2	59	12	65.000	N	2295	1	12046		185.000	G	2126195

Digital Ratios Summary Report Parameter Descriptions

NO—Ratio number 1-12.

RATIOS—Ratio value in fixed decimal notation (0.000-99999).

NUMERATOR/GRP—Numerator region group number.

NUMERATOR/KMRK—Numerator region left marker channel number.

NUMERATOR/MW—Numerator region marker channel width in number of channels.

NUMERATOR/PEAK—Numerator region peak channel location in fixed decimal notation (0.001-9999.999).

NUMERATOR N/G—Numerator region net (N) or gross (G) area indicator.

NUMERATOR AREA—Numerator region area (1 to 10^9-1). A value of 10^9 will displace N or G indicator.

DENOMINATOR/GRP—Denominator region group number.

DENOMINATOR/LMRK—Denominator region left marker channel number.

DENOMINATOR/MW—Denominator region marker channel width in number of channels.

DENOMINATOR/PEAK—Denominator region peak channel location in fixed decimal notation (0.001-9999.999).

DENOMINATOR N/G—Denominator region net (N) or gross (G) area indicator.

DENOMINATOR AREA—Denominator region area (1 to 10^9-1). A value of 10^9 will displace N or G indicator.

NUCLEAR DATA INC

Specifications subject to change.
Printed in U.S.A. 10/77 PS 1038 2.5

Sales and Service Facilities United States and Canada

Atlanta, Georgia
Tel: 404/284-1747

Boston, Mass.
Tel: 617/535-5665

Cleveland, Ohio
Tel: 216/331-5145

Denver, Colorado
Tel: 303/755-6607

Los Angeles, Calif.
Tel: 714/898-7760

New York, New York
Tel: 212/962-3666

San Francisco, Calif.
Tel: 415/483-9200

Schaumburg, Illinois
Tel: 312/884-3600

Washington, D.C.
Tel: 301/345-6766

Europe

Frankfurt, Germany
Tel: 529952

London, England
Tel: 22733, 25357

Uppsala, Sweden
Tel: (018) 15-25-15

Other Sales and Service Representatives located throughout the world. Please write or call Schaumburg, Illinois for your local representative.

CHAPTER XI
ND600 SERIAL INPUT/OUTPUT INTERFACE (70-2437)

DESCRIPTION

The ND600 Serial Input/Output Interface permits serial input/output data transfer between the ND600 System and any one of the following input/output peripheral devices: Teletype Model 33ASR Automatic Send/Receive Set, Texas Instruments Model 743 or 733 Terminal Printer or Digital Equipment Corporation Model LA36 Writer. It also permits serial output of all status page information and any of the various tables and reports generated by optional ND600 Firmware Packages. The interface also serves as a serial data communicator/controller interface to permit data, control and status transfer between ND600 Systems or between the ND600 System and another system. Input/output transfer rates are selectable from 50 to 9600 baud (depending upon device) via EIA RS-232-C Data Terminal Transmit/Receive Type D discipline.

Data input can be from the Teletype keyboard and/or paper tape reader, the TI terminal printer keyboard and/or magnetic tape cassette (733 ASR), or the DEC writer keyboard. Data output is to the Teletype printer with or without punching paper tape, the TI terminal printer and/or magnetic tape cassette (733 ASR), or the DEC writer.

All interface circuitry for any one of these input/output peripheral devices is contained on a half-width printed circuit board which plugs into any of the eight available half-size board connector slots in the front board housing of the ND600 Electronics Enclosure.

The basic ND600 System contains the firmware required for supporting any one of the serial input/output devices. If more than one serial input/output interface and peripheral device is ordered with the system, or if the serial input/output interface is to be used as a serial data communicator/controller channel, one additional firmware pair is required which must be installed on the Firmware Option board (70-2434).

TECHNICAL SPECIFICATIONS

BCD Input Output Code: 8-bit BCD coded ASCII in a standard 8-level, 10-unit (11-unit for Teletype) serial time code format (one start bit, an 8-bit ASCII character, one or two stop bits) via EIA RS-232-C Data Terminal Transmit/Receive Type D discipline.

Binary Input/Output Code: Standard 10 or 11-unit serial time code (one start bit, an 8-bit word and one or two stop bits) via EIA RS-232-C Data Terminal Transmit/Receive Type D discipline.

Input/Output Rates: Teletype - 110 baud. Terminal Printer/Keyboard - 300 baud. Magnetic Tape Cassette (733ASR) - 300 baud. DEC Writer - 300 baud. Serial Data Communicator/Controller - Selectable from 50 to 2400 baud (or up to 9600 baud with hardware "handshake" discipline).

BCD Data Format: Eight characters per channel - Six BCD coded digits of data, one space character, and one rubout (delete for Teletype) character; every tenth space and rubout are replaced by carriage return and line feed. Carriage return and line feed also follow the last channel readout. Printout of non-significant zeroes is suppressed (i.e., replaced by space).

Binary Data Format: Four six-bit binary bytes per channel with each byte transferred in the serial time code as the six least significant bits of the 8-bit word. Bit 8 of the 8-bit word is always logic 1 during transfer of the least significant binary byte.

BCD Identification of Channels Containing over One Million Counts: The character "M" is encoded in the first data digit and the remainder of the count over one million in the next five digits.

BCD Readout Format for All Channels in the Current Display Group: Consists of the current elapsed acquisition live time, carriage return/line feed, first channel address, carriage return/line feed, first channel content and the content of each channel and the address of every 100th channel within the current display group. A carriage return/line feed occurs after output of the content of each channel whose address ends in nine and after output of every 100th channel address. Channel addresses are preceded by the character "@" to distinguish them from channel contents.

BCD Readout Format for Channels in Marker Defined or Intensified Regions: Consists of the current elapsed acquisition live time, carriage return/line feed, start channel address, carriage return/line feed, start channel content, the content of each channel and the address of every 100th channel up to the stop channel, Stop channel address, and carriage return/line feed for the marker defined or each intensified region within the current display group. A carriage return/line feed occurs after output of the content of each channel whose address ends in nine and after output of every 100th channel address. Channel addresses are preceded by the character "@" to distinguish them from channel contents.

BCD Readout Format for Intensified Region Totals: Consists of the current elapsed acquisition live time, carriage return/line feed, start channel address, the total number of counts in the region (two 6-digit words containing the six most and six least significant digits, respectively), stop channel address and carriage return/line feed for each intensified region within the current display group. Channel addresses are preceded by the character "@" to distinguish them from region totals.

Communicator Control Word Format: Bits 1 through 7 of the 8-bit control word are encoded to command data acquisition, data input/output, status input/output, any other keyboard command, keyboard enable/disable or display on/off.

Power Requirements: +5 Vdc @ 0.5A. +12 Vdc @ 50 mA. -12 Vdc @ 25 mA.

Dimensions: Standard half-size board (8.5-in. l. x 5.2-in. w.)

Part Number: 70-2437.

INSTALLATION

Prior to installing the Serial Input/Output Interface, refer to Chapter II, noting the installation procedure for optional system component boards and the location of the board connectors in the ND600 Electronics Enclosure. The Serial Input/Output Interface is installed as follows:

1. Carefully unpack the Serial Input/Output Interface board(s), the Firmware Option Board (if included with the shipment) and the serial input/output peripheral device(s), saving the shipping cartons for possible reshipment. Thoroughly inspect the equipment for damage after its removal from the shipping cartons. If damage incurred during transit is apparent, notify the delivering carrier and then notify the nearest Nuclear Data representative or the Nuclear Data home office.

NOTE: The delivering carrier must be notified within 24 hours after receipt of the equipment to ensure reimbursement for any damage incurred during transit.

2. Locate the serial input/output device(s) adjacent to the ND600 Electronics Enclosure (or the cabinet in which the ND600 Electronics Enclosure is installed).

3. Remove ac power from the ND600 System by setting the POWER OFF/ON switch on the rear of the ND600 Electronics Enclosure to OFF.

4. Remove the front panel, top and rear cover retaining screws and remove the front panel, top and rear covers from the ND600 Electronics Enclosure.

5. If a Firmware Option Board (70-2434) was included in the shipment, insert it into the first available full-size board connector slot from the top of the front board housing in the ND600 Electronics Enclosure such that the component side of the board is at the top.

6. Insert the Serial Input/Output Interface Board (70-2437) into any available board connector slot in the front board housing of the ND600 Electronics Enclosure such that the component side of the board is at the top.

NOTE: To ensure proper propagation of the daisy-chained interrupt signals, ascertain that the Serial Input/Output Interface board is inserted into the first available option location (lowest available option number) in accordance with the diagram shown on S70-2419 (ND-MMF) in the System Diagram Section.

7. Interconnect the Serial Input/Output Interface board to the appropriate serial input/output interface device by performing the following steps, which are applicable.

8. Connect the internal cable harness (contains a 25-pin female chassis mount connector on one end and an interface board female mating connector on the other end) between the Serial Input/Output Interface board and the rear panel of the ND600 Electronics Enclosure as follows:

NOTE: If the Serial Input/Output Interface board and device are ordered with the ND600 System, the internal cable harness is installed prior to shipment from the factory.

a. Remove the cover from the inside of one of the five connector openings or the rear panel of the ND600 Electronic Enclosure, insert the 25-pin female chassis mount connector into the opening (from the inside, connector pins facing toward the rear), fasten the connector to the rear panel and label the connector according to the device being used (TTY, TI743 or 733, DEC WRITER or RS-232).

b. Lead the interface board female mating connector on the other end of the internal cable harness across the top of the ND600 Electronics enclosure and insert the connector into the male connector on the rear of the Serial Input/Output Interface board for the device being used such that the color mark on the ribbon cable is at the right when viewing the ND600 Electronics Enclosure from the front.

Teletype Interconnection

NOTE: If the Serial Input/Output Interface board and Teletype are ordered separate from the ND600 System, connect the internal cable harness between the Serial Input/Output Interface board and the rear panel of the ND600 Electronics Enclosure as described in step 8.

9. Insert the 25-pin male connector on the ribbon cable extending from the rear of the Teletype into the 25-pin female connector designated TTY on the rear panel of the ND600 Electronics Enclosure.

10. Connect the ac line cord from the Teletype to a conveniently located ac outlet.

TI 743 or 733 Terminal Printer Interconnection

NOTE: If the Serial Input/Output Interface board and TI 743 or 733 Terminal Printer are ordered separate from the ND600 System, connect the internal cable harness between the Serial Input/Output Interface board and the rear panel of the ND600 Electronics Enclosure as described in step 8.

11. Connect the Terminal Printer interface ribbon cable (contains a 25-pin male connector on one end and either a 15-pin female connector or a female card edge connector on the other end) between the TI 743 or 733 Terminal Printer and the rear panel of the ND600 Electronics Enclosure as follows:

a. Insert the 25-pin male connector on one end of the interface ribbon cable into the 25-pin female connector designated TI 743 or 733 on the rear panel of the ND600 Electronics Enclosure.

b. Insert the 15-pin female connector or the female card edge connector on the other end of the interface ribbon cable into the 15-pin male connector or the male card edge connector on the rear of the TI 743 or 733 Terminal Printer, respectively.

12. Connect the ac line cord supplied with the TI 743 or 733 Terminal Printer from the ac line receptacle on the rear of the TI 743 or 733 Terminal Printer to a conveniently located ac outlet.

LA-36 DEC Writer Interconnection

NOTE: If the Serial Input/Output Interface board and DEC Writer are ordered separate from the ND600 System, connect the internal cable harness between the Serial Input/Output Interface board and the rear panel of the ND600 Electronics Enclosure as described in step 8.

13. Insert the 25-pin male connector on the ribbon cable extending from the bottom rear of the DEC Writer into the 25-pin female connector designated DEC WRITER on the rear panel of the ND600 Electronics Enclosure.

14. Connect the ac line cord extending from the bottom rear of the DEC Writer to a conveniently located ac outlet.

Serial Communicator/Controller Interconnection

NOTE: If the Serial Input/Output Interface board strapped for use as the Serial Communicator/Controller is ordered separate from the ND600 System, connect the internal cable harness between the Serial Input/Output Interface board and the rear panel of the ND600 Electronics Enclosure as described in step 8.

15. Insert the 25-pin male connector on the RS-232 interunit cable from the controlling device into the 25-pin female connector designated RS-232 on the rear panel of the ND600 Electronics Enclosure.

NOTE: The signals (in compliance with EIA RS-232-C specifications) available at the pins of the 25-pin male connector on the communicator interface cable is as follows:

25-pin (EIA RS-232-C Compatible) Male Connector Pin. No.	Signal
1	Protect Ground
2	Transmitted Data
3	Received Data
4	Request to Send
5	Clear to Send
6	Data Set Ready
7	Signal Ground
20	Data Terminal Ready

16. After completing interconnection of the Serial Input/Output Interface board(s) to the corresponding serial input/output peripherial device(s), replace the front panel, top and rear covers on the ND600 Electronics Enclosure.

CAUTION: Do not operate the ND600 System without the front panel, top and rear covers installed as this will hamper operation of the cooling fans and may result in damage to the system.

17. Return ac power to the ND600 System by setting the POWER OFF/ON switch on the rear of the ND600 Electronics Enclosure to ON.

OPERATION

The following are typical procedures for data readout from the ND600 System to the serial input/output peripheral device(s) and data read-in to the ND600 System from the appropriate device(s). These procedures assume the Serial Input/Output Interface board(s) and the corresponding serial input/output peripheral device(s) have been properly installed and that the user has referred to the operating instructions contained in the instruction manual on the respective device(s).

Data Readout Procedure

NOTE: Prior to performing the following procedure, load the appropriate device with fanfold or roll stock printer paper and paper tape (if device is a Teletype) as described in the instruction manual on the respective device.

1. Set the respective device on-line as follows:

Teletype

a. Set the Teletype LINE/OFF/LOCAL switch to LINE.

NOTE: If BCD formatted punched paper tape is desired in addition to hard copy, engage the Teletype punch mechanism by depressing the ON pushbutton of the Teletype paper tape punch.

743 Terminal Printer

b. Set the 743 Terminal Printer POWER switch to the rear.

c. Select 30 CPS (300 baud) by releasing the LOW SPEED key.

d. Select Full Duplex by releasing the HALF DUPLEX key.

e. Depress the ON LINE key.

733 Terminal Printer

f. Set 733 Terminal Printer POWER switch to ON and ON LINE/OFF switch to ON LINE.

g. Set internal SPEED switch to HI (300 baud) and DUPLEX switch to FULL.

NOTE: If the 733 Terminal Printer includes a magnetic tape cassette system (ASR version), select the printer by setting the PRINTER switch located on the switch panel to LINE. Refer to the operating instructions in the instruction manual on the 733 ASR Terminal Printer for selection of, and readout to, a magnetic tape cassette in addition to, or instead of, the printer.

LA36 DEC Writer

h. Set the LA36 DEC Writer PRINTER rocker switch to ON.

i. Select 300 baud by releasing the BAUD RATE/110 key and depressing the BAUD RATE/300 key.

j. Select Full Duplex by releasing the FDX HDX key.

k. Select LINE by releasing the LINE LOC key.

2. Select Status Page 4.

3. Select the input/output device, mode and data for IO1 as follows:

NOTE: If IO2 is desired, substitute IO2 for IO1 in the following steps.

4. Set the display cursor to the IO1 parameter using the CRSR pushbutton and depress the NXTV pushbutton to select TTY.

NOTE: If only one serial input/output interface and peripheral device is included in the system, that device is always assigned as the TTY device. If more than one interface and device is included, the second device is assigned as the SU1 device. The serial data communicator/controller channel is assigned as the SU2 device.

5. Set the display cursor to the IO1/MODE parameter using the CRSR pushbutton and depress the NXTV pushbutton to select BCDO (BCD formatted output).

6. Set the display cursor to the IO1/DATA parameter using the CRSR pushbutton and depress the NXTV pushbutton to select ALL (all channels in the current display group), MRKR (the channels between the markers), ROI (the channels in the intensified regions of interest), TOT (the intensified region of interest totals) or STAT (the information in the current status page).

NOTE: Only data records which are punched on paper tape or written on cassette where all channels (ALL) is selected can be properly read back into the ND600. *)

7. Depress the IO1 pushbutton. Readout of the selected data to the selected device will now begin. Readout will continue until the selected data is completely readout, at which time, readout is automatically terminated. Readout can be terminated at any time by depressing the STOP pushbutton.

NOTE: During readout of spectral data, a marker is displayed at the channel currently being read out.

8. To generate a trailer (sprocket punches only) after punching a data record on paper tape at the Teletype, set the LINE/OFF/LOCAL switch to LOCAL and depress and hold the HERE IS key for a few seconds.

*) Es geht auch, zwischen Markers einzulesen, wenn diese vorher nicht gesetzt wurden!
(vgl. S 11-12)

Sample Data Printout

```
  37
  @0
   0   1668   2907   3938   2547   1555   1381   1412   1508   1523
1749   2002   1847   1699   1595   1444   1478   1521   1571   1542
1489   1506   1548   1580   1583   1569   1668   1608   1655   1888
1903   1997   2122   2082   2121   2155   2099   1997   1833   1809
1850   1746   1670   1613   1544   1616   1461   1421   1499   1462
1462   1332   1517   1451   1397   1436   1436   1392   1354   1464
1366   1434   1467   1382   1368   1412   1395   1424   1440   1451
1430   1466   1371   1318   1361   1356   1229   1220   1077   1067
 982    982    927    901    971    906    934    887    909    853
 810    865    853    849    851    808    786    795    803    834
@100
 834    893   1007   1186   1477   1896   2460   2991   3400   3708
3808   3645   3145   2761   2207   1818   1479   1215   1093    973
 888    814    771    724    734    757    731    712    767    769
 738    794    788    789    801    804    828    789    823    833
 810    855    853    849    841    854    870    903    852    838
 822    877    838    791    831    775    746    736    665    657
 632    633    606    549    513    521    570    534    544    556
 536    519    504    513    568    554    513    502    465    403
 429    429    432    422    483    581    720    889   1093   1259
1513   1618   1786   1821   1679   1688   1459   1249   1020    841
@200
 652    510    382    305    266    217    187    211    211    227
 296    387    514    629    838   1015   1204   1241   1430   1380
1388   1282   1137    952    792    689    527    408    325    262
 191    169    138    101    105     83     85     49     63     62
  44     35     44     50     36     41     35     39     29     26
  28     35     25     36     27     35
```

Sample Region Printout

```
  37
@182
 432    422    483    581    720    889   1093   1259
1513   1618   1786   1821   1679   1688   1459   1249   1020    841
@200
 652    510    382    305    266    217    187    211    211    227
 296    387    514    629    838   1015   1204   1241   1430   1380
1388   1282   1137    952    792    689    527    408    325    262
 191   @231
```

Sample Totalization Printout

```
  37
  @1        0   12615    @6
 @99        0   45303   @123
@182        0   22885   @206
@208        0   17494   @232
```

Data Read-in Procedure

NOTE: If the serial input/output peripheral device interconnected to the ND600 System is either a Teletype or a 733 ASR Terminal Printer, a data record previously punched on paper tape at the Teletype punch or written on a magnetic tape at the 733 ASR Terminal Printer from all channels can be read into the ND600.

1. To read-in a data record punched on paper tape from the Teletype, set the START/FREE/STOP switch to FREE, load the paper tape containing the data record into the Teletype reader with the leader (sprocket punches only) above the read head, and set the START/FREE/STOP switch to START.

2. To read-in a data record written on a magnetic tape cassette from the 733 ASR Terminal printer, refer to the operating instructions in the instruction manual on the 733 ASR Terminal Printer for selection of, and read-in from a magnetic tape cassette.

3. Select Status Page 4.

4. Set the display cursor to the IO1 (or IO2, if desired) parameter using the CRSR push-button and depress the NXTV pushbutton to select TTY.

NOTE: If read-in of a data record written on a magnetic tape cassette is desired and the 733 ASR Terminal Printer is not assigned as the TTY device, depress the NXTV pushbutton to select the SU1 device.

5. Set the display cursor to the IO1 (or IO2)/MODE parameter using the CRSR pushbutton and depress the NXTV pushbutton to select BCD1 (BCD formatted input).

6. Set the display cursor to the IO1 (or IO2)/DATA parameter using the CRSR pushbutton and depress the NXTV pushbutton to select ALL.

7. Depress the IO1 (or IO2) pushbutton. Data read-in from the selected device will now begin. If the number of channels in the data record being read is equal to the number of channels in the current display group, data read-in will continue until the data record is completely read, at which time, read-in is automatically terminated. If the number of channels in the data record being read is greater than the number of channels in the current display group, data read-in automatically terminates when the selected channels are filled. Read-in can be terminated at any time by depressing the STOP pushbutton.

Keyboard Read-in Procedure

The keyboard of a serial input/output peripheral device can be used to enter and display up to 20 lines of up to 36 characters each of user selected alphanumeric information on any of the eight available status pages. The information entered can be any special parameter data which can be defined using the ASCII character keys available on the keyboard of the peripheral device, such as a date, time, title, or other information the user desires to identify or label a particular experiment. The procedure for entry of information from the keyboard of a peripheral device is as follows:

1. Select Status Page 4.

2. Set the display cursor to the IO1 (or IO2, if desired) parameter using the CRSR pushbutton and depress the NXTV pushbutton to select TTY.

NOTE: If the peripheral device from which read-in is desired is not assigned as the TTY device, depress the NXTV pushbutton to select the SU1, SU2 or SU3 device to which it is assigned.

3. Set the display cursor to the IO1 (or IO2)/MODE parameter using the CRSR pushbutton and depress the NXTV pushbutton to select BCDI (BCD read-in mode).

4. Set the display cursor to the IO1 (or IO2)/DATA parameter using the CRSR pushbutton and depress the NXTV pushbutton to select STAT (status display).

5. Select the Status Page on which information entered is to be displayed.

6. Depress the IO1 (or IO2) pushbutton. This selects the BCD read-in mode to the status display from the keyboard of the selected peripheral device. This mode is indicated by a colon (:) being flashed on the display in the first character location of the line below the last line of alphanumeric data contained on the selected status page. After entry into this mode any sequence of characters available at the keyboard of the selected peripheral device may be entered and displayed using the space key where desired and carriage return/line feed to select the next line. As characters are entered and displayed, the flashing colon (:) moves to the next character location to the right or to the next line when carriage return/line feed is entered. If more than 36 characters are entered in any line, the excess characters will overlap those previously entered starting with the first character of the line. When the last line on the selected status page is filled, entry of status information is terminated, i.e. any further character entries are ignored.

NOTE: The information entered and displayed can be removed from the current status page at any time by depressing the STOP pushbutton. If the information is to be retained for readout to an X-Y plotter, avoid depressing the STOP pushbutton until the plot operation has been performed as this will require re-entry of the information into the status display. The information entered in the status display can also be readout to the peripheral device

by assigning it as the IO1 device in the BCDI mode to STAT and as the IO2 device in the BCDO mode from STAT, or vice versa. Then, depress the IO1 pushbutton to permit entry of information into the status display from the keyboard of the peripheral device, terminate entry of information by depressing the EOT (end of transmission) key at the keyboard of the peripheral device, and depress the IO2 pushbutton to readout the status information to the peripheral device.

The keyboard of a serial input/output peripheral device can also be used to enter numerical information into any data channel or any sequential group of data channels. The procedure for inputting numerical information from the keyboard of a peripheral device is as follows:

1. Select Status Page 4.

2. Set the display cursor to the IO1 (or IO2, if desired) parameter using the CRSR pushbutton and depress the NXTV pushbutton to select TTY.

NOTE: If the peripheral device from which read-in is desired is not assigned as the TTY device, depress the NXTV pushbutton to select the SU1, SU2 or SU3 device to which it is assigned.

3. Set the display cursor to the IO1 (or IO2)/MODE parameter using the CRSR pushbutton and depress the NXTV pushbutton to select BCDI.

4. Set the display cursor to the IO1 (or IO2)/DATA parameter using the CRSR pushbutton and depress the NXTV pushbutton to select MRKR.

5. Select Status Page 1 and set the left marker to the first channel into which information is to be entered.

6. Depress the IO1 (or IO2) pushbutton. This selects the BCD read-in mode to the channels between the markers from the keyboard of the peripheral device. This mode is indicated by a colon (:) being flashed on the display in the first character location of the line below the last line of alphanumeric data contained in the current status page.

7. Sequentially enter the numerical value for each data channel starting with the left marker channel, entering a space after each value and carriage return/line feed to select the next line. The values are displayed on the line as entered and also as a display point in the channel in which they are entered. This mode can be exited at any time by depressing the STOP pushbutton. This removes the flashing colon (:) and the line(s) of numerical entries from the display. However, the values entered into the data channels will remain until the ERASE pushbuttons are simultaneously depressed.

Serial Data Communicator/Controller Channel

When the Serial Input/Output Interface board is strapped for use as a data terminal, it provides a serial data communicator/controller channel for an external device or computer to control sending and receiving of both data and commands between the controlling device and the ND600 Systems.

External control of the ND600 by an external controlling device requires generation of a program which uses commands in the same manner as an operator uses the pushbuttons to select and initiate operations at the ND600 System. As an aid in writing this controlling program, descriptions of the command codes and their use in simulating the actions of the ND600 pushbutton are included in the following paragraphs.

NOTE: The data and control word formats are described in the Technical Specifications (Page 11-3).

General Information

When the ND600 receives an external command, it sends an acknowledge code (006_8) back to the controller to signify that it has accepted this command and is ready to accept the next command. Since the time between receipt of the external command and sending of the acknowledge code varies depending on the specific command or on what the ND600 is processing at the time of the command, the external controller must wait till it receives the acknowledge code before it sends the next command. To signal completion of I/O, the ND600 sends code 074_8. However, certain commands can stop I/O before it is completed. These include the STOP command and any command that reconfigures the system, such as group size or number of groups. In this case, the ND600 sends code 075_8 to signal that I/O has been stopped abnormally.

NOTE: Codes $0 - 37_8$ are ignored completely as commands, i.e., they are never acknowledged by code 006_8.

When the ND600 is required to change certain parameters (PAGE, DGRP, LMRK, RMRK, LE, RE, OGRP, GSIZ or GRPS), the external controller must wait an additional 100 msec after receipt of the acknowledge signal before issuing any new commands. This additional time is needed for the ND600 to complete its assignment and to insure that the new commands will be properly executed.

NOTE: If desired, the Update command (171_8) can be issued in place of the 100 msec delay.

Full RS-232 control is supported by SU1 and SU2. If this is not desired, the Serial Input/Output Interface board strapping or cabling must pull signal CTS (Clear To Send) high (ND600 strapped for use as a Data Terminal) or signal RTS (Request fo Send) high (ND600 strapped for use as a Data Set). If this protocol is used and signal RTS (or CTS) eminating from the ND600 is lost, e.g., by accidentally sending faulty serial data to the ND600, recovery may be accomplished using one of the following methods:

1. Send a legal external command, i.e., SHIFT (074_8 or 075_8), or

2. Set IO1 (or IO2) to SU2; its DATA as undefined (enter 0) and then depress 2 and the IO1 (or IO2) pushbutton.

NOTE: Since signal RTS (or CTS) is only asserted during data transfers when the TTY or SU1 device is selected, it is unlikely to be lost. However, if it is, recovery is accomplished by re-initializing I/O.

The NEXT VALUE command should be used with caution as the external controller will encounter difficulty in determining the present value of a variable or parameter.

Special Routines

The following special routines insure that the desired action occurs irrespective of the current status of the ND600.

	Operation	Pushbutton Sequence	Octal Codes Sequence
1.	Stop Acquisition	-, ACQ, -, ACQ	043, 100, 043, 100
2.	Start Acquisition	-, ACQ, -, ACQ, ACQ	043, 100, 043, 100, 100
3.	Select a Status Page	-, CRSR, Page #, ENTER	043, 072, XXX, 076 NOTE: XXX is the octal code of the desired page number (refer to Table 11-1).
4.	De-expand the Display	MOTION LEFT, EXPAND	117,064

Setup For External Verification

The Serial Data Communicator/Controller facility, which is accessed via the SU2 designation (Special Unit 2) for an I/O device (IO1 or IO2 parameter, Status Page 4), provides a means of verifying proper receipt of external commands. This may be achieved by having the ND600 transmit the status page to the external controller for verification after entries have been modified. The following setup should be performed on Status Page 4 to enable the feedback. It may be performed either at the ND600 keyboard or via the external controller.

1. Set either IO1 or IO2 to SU2.

2. Set the MODE to BCDO.

3. Set the DATA to STAT.

4. Send the appropriate status page(s) to the external controller after each command or series of commands. This is performed by externally commanding IO1 or IO2. Thus, the status pages may be verified for the proper changes.

Setup For Remote Operations

The following example illustrates the external command features of the ND600 System. This example demonstrates the commands by which an external controller is able to stop any currently operating functions of the ND600, the commands necessary to setup the ND600 for returning Status Page information for verification by the external controller and the commands required to set up the ND600 in a typical auto analysis experiment using the auto-job capability to actually control acquisition, processing and I/O functions.

	Operation	Pushbutton Sequence	Octal Code Sequence
1.	Disable (Enable) keyboard to prevent modification of commands by local operator.	No pushbutton exists for this function.	175 (174)
2.	Terminate operations currently in process.		
a.	Stop auto-job, I/O or operational function.	STOP	106
b.	Stop acquisition	-, ACQ, -, ACQ	043, 100, 043, 100

NOTE: This double sequence ensures acquisition is stopped regardless of its current state.

3. Setup IO2 to send Status Page 4 to the external controller for verification.

a.	Home cursor and select Status Page 4, wait 100 msec or issue Update command.	-, CRSR, 4, ENTER	043, 072, 052, 076, 100 msec delay or 171
b.	Set IO2/DATA parameter to STAT.	CRSRUP (6 times), 7, 8, 2, 8, ENTER NOTE: STAT is entered as 7828 at operand pushbutton array).	072, 072, 072, 072, 072, 072, 055, 056, 050, 056, 076
c.	Set IO2/MODE parameter to BCDO	CRSR UP (twice), 2, 2, 3, 6, ENTER NOTE: BCDO is entered as 2236 at operand pushbutton array.	072, 072, 050, 050, 051, 054, 076

	Operation	Pushbutton Sequence	Octal Code Sequence
d.	Set IO2 parameter to SU2.	CRSR UP (twice), 7, 8, 2, ENTER NOTE: SU2 is entered as 782 at operand pushbutton array.	072, 072, 055, 056, 050, 076
e.	Send Status Page 4 to external controller for verification.	IO2	124
4.	Setup Status Page 1.		
a.	Home cursor and select Status Page 1, wait 100 msec or issue Update command.	-, CRSR, 1, ENTER	043, 072, 047, 076, 100 msec delay or 171
b.	Set GSIZ parameter to 1024, wait 100 msec or issue Update command. GRPS parameter is automatically calculated for memory size.	CRSR DOWN (5 times), 1, 0, 2, 4, ENTER	073, 073, 073, 073, 073, 047, 046, 050, 052, 076, 100 msec delay or 171
c.	Set DGRP parameter to 2, wait 100 msec or issue Update command.	CRSR DOWN (3 times), 2, ENTER	073, 073, 073, 050, 076, 100 msec delay or 171
d.	Erase group 2 in preparation for auto job.	ERASE	102
e.	Set DGRP parameter to 3, wait 100 msec or issue Update command.	3, ENTER	051, 076, 100 msec delay or 171
f.	Erase group 3 in preparation for auto job.	ERASE	102
g.	Set LMKR parameter to 40, wait 100 msec or issue Update command.	CRSR DOWN, 4, 0, ENTER	073, 052, 046, 076, 100 msec delay or 171

	Operation	Pushbutton Sequence	Octal Code Sequence
h.	Set RMKR parameter to 1023, wait 100 msec or issue Update command	CRSR DOWN, 1, 0, 2 3, ENTER	073, 047, 046, 050, 051 076, 100 msec delay or 171
i.	Send Status Page 1 to external controller for verification.	IO2	124
5.	Setup Status Page 2 for desired acquisition parameters.		
a.	Home cursor and select Status Page 2, wait 100 msec or issue Update command.	-, CRSR, 2, ENTER	043, 072, 050, 076, 100 msec delay or 171
b.	Set MODE parameter to PHAC.	CRSR DOWN, 7, 4, 2, 2, ENTER NOTE: PHAC is entered as 7422 at operand push-button array.	073, 055, 052, 050, 050, 076
c.	Set AGRP parameter	CRSR DOWN (twice), 2, ENTER.	073, 073, 050, 076
d.	Set TBASE parameter to 1.	CRSR DOWN (twice), 1, ENTER	073, 073, 047, 076
e.	Set TMULT parameter to 1S.	CRSR DOWN, 1, 7, ENTER NOTE: 1S is entered as 17 at operand pushbutton array.	073, 047, 055 076
f.	Set PTIM parameter to 100 seconds.	CRSR DOWN, 1, 0, 0, ENTER.	073, 047, 046, 046, 076
g.	Set PTOT parameter to 200,000 counts.	CRSR DOWN (twice), 2, 0 0, 0, 0, 0, ENTER	073, 073, 050, 046, 046, 046, 046, 046, 076
h.	Set PLEV parameter to 35,200 counts.	CRSR DOWN (twice), 3, 5, 2, 0, 0, ENTER	073, 073, 051, 053, 050, 046, 046, 076
i.	Set DOFF parameter to 512 channels. NOTE: ADC CONV GAIN may be set to 2K, 4K or 8K.	CRSR DOWN (twice), 5, 1, 2, ENTER	073, 073, 053, 047, 050, 076

	Operation	Pushbutton Sequence	Octal Code Sequence
j.	Send Status Page 2 to external controller for verification.	IO2	124
6.	Setup Status Page 3 for desired data manipulation parameters.		
a.	Home cursor and select Status Page 3, wait 100 msec or issue Update command.	-, CRSR, 3, ENTER	043, 072, 051, 076, 100 msec delay or 171
b.	Set E/CH parameter to 1.25 keV/channel.	CRSR DOWN, 1, ., 2, 5, ENTER	073, 047, 044, 050, 053, 076
c.	Set E(0) parameter to 640 keV. NOTE: Since DOFF = 512 and E/CH = 1.25, E (0) = 1.25 x 512 = 640	CRSR DOWN, 6, 4, 0, ENTER	073, 054, 052, 046, 076
d.	Set SF parameter to 4.35.	CRSR UP (4 times), 4, ., 3, 5, ENTER	072, 072, 072, 072 052, 044, 051, 053, 076
e.	Send Status Page 3 to external controller for verification.	IO2	124
7.	Setup Status Page 4 for desired auto-job sequence.		
a.	Home cursor and select Status Page 4, wait 100 msec or issue Update command.	-, CRSR, 4, ENTER	043, 073, 052, 076, 100 msec delay or 171
b.	Set CYCLES parameter to 250.	CRSR DOWN, 2, 5, 0, ENTER	073, 050, 053, 046, 076
c.	Set F1 parameter to SMOOTH	CRSR DOWN, 2, 0, 4, ENTER NOTE: SMOOTH is entered as 204 at operand pushbutton array.	073, 050, 046, 052 076
d.	Set F2 parameter to SQRT.	CRSR DOWN (twice), 2, 0, 5, ENTER NOTE: SQRT is entered as 205 at operand pushbutton array	073, 073, 050, 046, 053, 076

	Operation	Pushbutton Sequence	Octal Code Sequence
e.	Set STEP 1 parameter to ACR.	CRSR DOWN, 2, 2, 7, ENTER NOTE: ACR is entered as 227 at operand pushbutton array.	073, 050, 050, 055, 076
f.	Set STEP 2 parameter to STRP.	CRSR DOWN (twice), 7, 8, 7, 7, ENTER NOTE: STRP is entered as 7877 at operand pushbutton array.	073, 073, 055, 056, 055, 055, 076
g.	Set STEP 3 parameter to F1.	CRSR DOWN (twice), 3, 1, ENTER NOTE: F1 is entered as 31 at operand pushbutton array.	073, 073, 051, 047, 076
h.	Set IO1 to SU2. NOTE: IO1 is selected for transfer of the spectrum to the external controller.	CRSR DOWN, 7, 8, 2, ENTER NOTE: SU2 is entered as 782 at operand pushbutton array.	073, 055, 056, 050, 076
i.	Set STEP 4 parameter to IO1,	CRSR DOWN, 4, 6, 1, ENTER NOTE: IO1 is entered as 461 at operand pushbutton array.	073, 052, 054, 047, 076
j.	Set IO1/MODE parameter to BINO.	CRSR DOWN, 2, 4, 6, 6, ENTER NOTE: BINO is entered as 2466 at operand pushbutton array.	073, 050, 052, 054, 054, 076
k.	Set STEP 5 parameter to F2.	CRSR DOWN, 3, 2, ENTER NOTE: F2 is entered as 32 at operand pushbutton array.	073, 051, 050, 076

	Operation	Pushbutton Sequence	Octal Code Sequence
l.	Set IO1/DATA parameter to ALL.	CRSR DOWN, 2, 5, 5, ENTER NOTE: ALL is entered as 255 at operand pushbutton array.	073, 050, 053, 053, 076
m.	Set STEP 6 parameter to IO1.	CRSR DOWN, 4, 6, 1, ENTER NOTE: IO1 is entered as 461 at operand pushbutton array.	073, 052, 054, 047, 076
n.	Set STEP 7 parameter to ERASE.	CRSR DOWN (twice), 3, 7, 2, 7,3, ENTER NOTE: ERASE is entered as 37273 at operand pushbutton array.	073, 073, 051, 055, 050, 055, 051, 076
o.	Set AUTG parameter to 2.	CRSR DOWN (4 times), 2, ENTER	073, 073, 073, 073, 050, 076
p.	Set STRIP parameter to 0.1.	CRSR DOWN, 0, ., 1, ENTER	073, 046, 044, 047, 076
q.	Set WGRP parameter to -3.	CRSR DOWN (twice), -, 3, ENTER	073, 073, 043, 051 076
r.	Send Status Page 4 to external controller for verification.	IO2	124
8.	Initiate auto-job sequence. NOTE: The entered auto-job sequence will be performed 250 times.	AUTO	104

Pushbutton/Command Code Cross Reference

Table 11-1 lists the codes which permit the user to control the ND600 via an external device. These codes exclude the first 32 states in order to prevent complications when using commercial communication equipment such as Modems.

Table 11-1. ND600 Pushbutton/Command Code Cross Reference.

ND600 Pushbutton	Octal Code	Binary Code (Note 1)	Corresponding ASCII Character
*	040	00 100 000	Space
+	041	00 100 001	!
&	042	00 100 010	"
-	043	00 100 011	#
.	044	00 100 100	$
/	045	00 100 101	%
0	046	00 100 110	&
1	047	00 100 111	'
2 (ABC)	050	00 101 000	(
3 (DEF)	051	00 101 001	)
4 (GHI)	052	00 101 010	*
5 (JKL)	053	00 101 011	+
6 (MNO)	054	00 101 100	,
7 (PRS)	055	00 101 101	-
8 (TUV)	056	00 101 110	.
9 (WXY)	057	00 101 111	/
MPOS Right (>>)	060	00 110 000	0
MPOS Left (<<)	061	00 110 001	1
MSPN Right (>>)	062	00 110 010	2
MSPAN Left (<<)	063	00 110 011	3
XPND	064	00 110 100	4
XPND	065	00 110 101	5
CFS Up (>>)	066	00 110 110	6
CFS Down (<<)	067	00 110 111	7
RST (>>)	070	00 111 000	8
ADV (<<)	071	00 111 001	9
CRSR Up (>>)	072	00 111 010	:
CRSR Down (<<)	073	00 111 011	;
SHIFT Left (<<)	074	00 111 100	<
SHIFT Right (>>)	075	00 111 101	=
ENTER	076	00 111 100	>
ENTER	077	00 111 111	?
ACQ	100	01 000 000	@
ACQ	101	01 000 001	A
ERASE	102	01 000 010	B
ERASE	103	01 000 011	C
AUTO	104	01 000 100	D
AUTO	105	01 000 101	E

Table 11-1. ND600 Pushbutton/Command Code Cross Reference (Cont'd).

ND600 Pushbutton	Octal Code	Binary Code (Note 1)	Corresponding ASCII Character
STOP	106	01 000 110	F (Note 2)
STOP	107	01 000 111	G (Note 2)
SCRL	110	01 001 000	H
SCRL	111	01 001 001	I
INT (>>)	112	01 001 010	J
DEL (<<)	113	01 001 011	K
NXTV Up (>>)	114	01 001 100	L
NXTV Down (<<)	115	01 001 101	M
MOTN Right (>>)	116	01 001 110	N
MOTN Left (<<)	117	01 001 111	O
WIDTH Expand (>>)	120	01 010 000	P
WIDTH Contract (<<)	121	01 010 001	Q
IO1	122	01 010 010	R
IO1	123	01 010 011	S
IO2	124	01 010 100	T
IO2	125	01 010 101	U
STRP (>>)	126	01 010 110	V
PLOT (<<)	127	01 010 111	W
F1 (>>)	134	01 011 100	\
F2 (<<)	135	01 011 101	]
F3 (>>)	136	01 011 110	^
F4 (<<)	137	01 011 111	_
AREA BGND	142	01 100 010	b
AREA BGND	143	01 100 011	c
ECAL	144	01 100 100	d
ECAL	145	01 100 101	e
Keyboard Enable	174	01 111 100	i
Keyboard Disable	175	01 111 101	}
Display Off	172	01 111 010	z
Display On	173	01 111 011	{
Update	171	01 111 001	y
Suppress external control until ACQ or AUTO is complete	177	01 111 111	RUBOUT (Note 3)

NOTES

1. Parity is ignored; codes 0 - 37_8 are neither acted upon nor acknowledged.

2. Before attempting input into the ND600, ascertain that the STOP pushbutton is clear by depressing the SHIFT pushbutton if the STOP pushbutton was depressed last.

3. Do not issue the Suppress External Control command if the keyboard is disabled as the STOP command can not restore control under the e circumstances (i.e., if ACQ or AUTO is unending).

Table 11-2. Acquire Mode Parameters.

Mnemonic	Numeric Equivalent	Description
PHAC	7422	PHA Clock Time Control
PHAL	7425	PHA Live Time Control
MCS	627	Multichannel Scaling
LIST	5478	Sequential List

Table 11-3. Time Multiplier Parameters.

Mnemonic	Numeric Equivalent	Description
10US	1087	10 μsec
100US	10087	100 μsec
1MS	167	1 msec
10MS	1067	10 msec
100MS	10067	100 msec
1S	17	1 sec
10S	107	10 sec
100S	1007	100 sec
1M	16	1 min
EXT	398	External

Table 11-4. Auto Analysis Step Parameters.

Mnemonic	Numeric Equivalent	Description
F1	31	F1 Function
F2	32	F2 Function
F3	33	F3 Function
F4	34	F4 Function
IO1	461	IO1 Operation
IO2	462	IO2 Operation
ERASE	37273	Erase Operation
ACR	227	Acquire Operation
STRP	7877	Strip Operation
PLOT	7568	Plot Operation
NXTG	6984	Next Group Operation

Table 11-5. IO1/IO2 Parameters.

Mnemonic	Numeric Equivalent	Description
IO1/IO2 Device		
MAGT	6248	Magnetic Tape
LP	57	Line Printer
PT	78	Paper Tape Reader/Punch
SU1	781	Special Unit 1
SU2	782	Special Unit 2
SU3	783	Special Unit 3
TTY	889	Teletype
IO1/IO2 MODE		
BCDI	2234	Input BCD Data
BCDO	2236	Output BCD Data and/or Status Pages
BINI	2464	Input Binary Data
BINO	2466	Output Binary Data
IO1/IO2 DATA		
ROI	764	Content of channels in intensified regions
TOT	868	Intensified region count totals
STAT	7828	Current status page
MRKR	6757	Content of channels between markers
ALL	255	Content of all channels in group

Table 11-6. Data Manipulation Functions (47-0054).

Mnemonic	Numeric Entry	Description
ADD	200	Add a constant to each channel in the current display group.
INTEG	201	Integrate area between the markers in current display group.
DIFF	202	Differentiate area between the markers in current display group.
XFER	203	Transfer the data spectrum from specified group to current display group.
SMOOTH	204	Perform a five-point coefficient smooth on the data spectrum in the current display group.
SQRT	205	Calculate the square root of the data spectrum in the current display group.
REL ERR	206	Calculate the relative counting error of the data spectrum in the current display group.
COMPRESS	207	Compress the data spectrum in the current display group by a factor of two.

Table 11-7. Intensified Region Peak Extraction Function (47-0055).

Mnemonic	Numeric Entry	Description
XTRCT	100	Output intensified region peak extraction report at 101 device.

Table 11-8. Intensified Region Isotope Identification Functions (47-0056).

Mnemonic	Numeric Entry	Description
SETUP ID	400	Permits entry of an energy tolerance (±) between the calculated energy, and the actual energy listed in the isotope library table.
ID	401	Output intensified region peak extraction and intensified region isotope identification reports at 101 device.
LIST TAB	402	List isotope library table at 101 device.

Table 11-9. Automatic Peak Search Functions (47-0057).

Mnemonic	Numeric Entry	Description
SETPS	500	Permits entry of the peak search set-up parameters.
PSRCH	501	Output automatic peak search report at IO1 device.
PSINT	502	Intensify spectral display of each peak and output automatic peak search report at IO1 device.
VFWHM	503	Calculate coefficients of variable FWHM curve based on values entered for energy versus half-width parameters.

Table 11-10. Automatic Isotope Identification Functions (47-0058).

Mnemonic	Numeric Entry	Description
AID	600	Permits entry of the isotope identification set-up parameters.
ISO ID	601	Output automatic peak search and isotope identification reports at IO1 device.
LIST TAB	602	List isotope library table at IO1 device.
COEFFS	603	Calculate coefficients of dual parabola detector efficiency curve based on values entered for energy versus efficiency parameters.
GRAPH	604	Display graph of dual parabola detector efficiency curve.

Table 11-11. Digital Ratios Functions(47-0071).

Mnemonic	Numeric Entry	Description
DIGITAL RATIOS	300	Permits entry of the digital ratios set-up parameters.
RATIO LIST	301	Output digital ratios list at IO1 device.
FREEZE	302	Permits visually monitoring digital ratios during accumulation by freezing the periodic update of the status display.

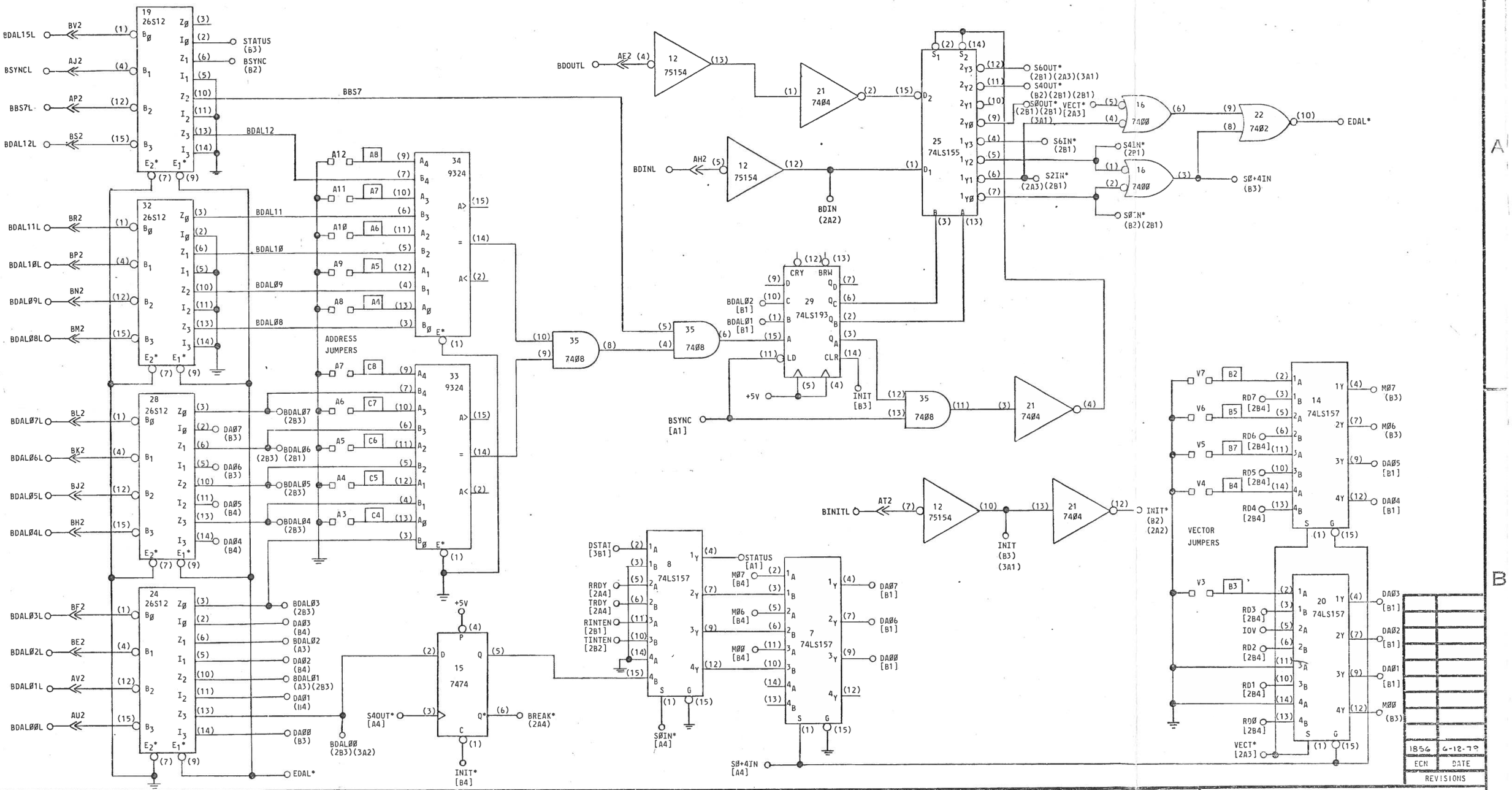

NOTES:

1 - ALL DIODES ARE G964 OR EQUIVALENT, EXCEPT AS NOTED.
2 - ALL RESISTORS ARE 1/4W, ±5%, EXCEPT AS NOTED.
3 - ALL CAPACITORS ARE pf, EXCEPT AS NOTED.
4 - I.C. VOLTAGES, EXCEPT AS NOTED:
14 PIN DIP, PIN (7) GND: PIN (14) +5V
16 PIN DIP, PIN (8) GND: PIN (16) +5V
24 PIN DIP, PIN (12) GND: PIN (24) +5V

5 - THE FOLLOWING SYMBOLS/NOTATIONS ARE USED ON THE DIAGRAM AND/OR PRINTED CIRCUIT BOARD ASSEMBLY.

IC - INTEGRATED CIRCUIT
Q - TRANSISTOR
( ) - IC PIN DESIGNATION
- CONNECTOR DESIGNATION
NC - NO CONNECTION
RESISTOR PACK
C4 - 2.2K TO +5V
SAT - SELECT AT TEST
(P1) - PRECISION RESISTORS 100PPM 1/8W, ±1% METAL FILM
- DC COMMON
- CURRENT SOURCE
- WIRE WRAP POST
- GERMANIUM DIODE
- SILICON DIODE
- ZENER DIODE
- TUNNEL DIODE
- SELENIUM DIODE
- L.E.D.

ADC* — SIGNAL NAME
[4A2] — SIGNAL SOURCE DRAWING LOCATION, OR
(4A2) — SIGNAL LOAD DRAWING LOCATION
ZONE LOCATION
SHEET NUMBER

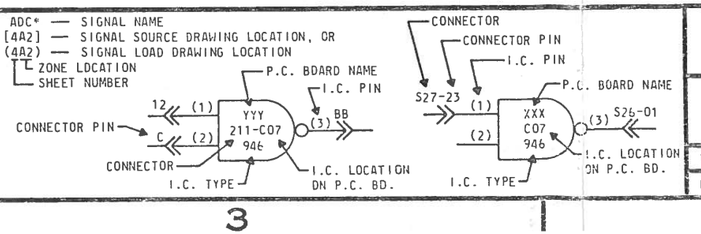

NUCLEAR DATA INC
POST OFFICE BOX 451 PALATINE, ILLINOIS 60067

LOGIC DIAGRAM
ND600/660 SERIAL INTERFACE

ND-TYM		
DRAWN BY: THJ	CHECKED BY:	SHEET 1 OF 5
DATE DRAWN: 8/23/77	APPROVED BY:	S70-2437-02

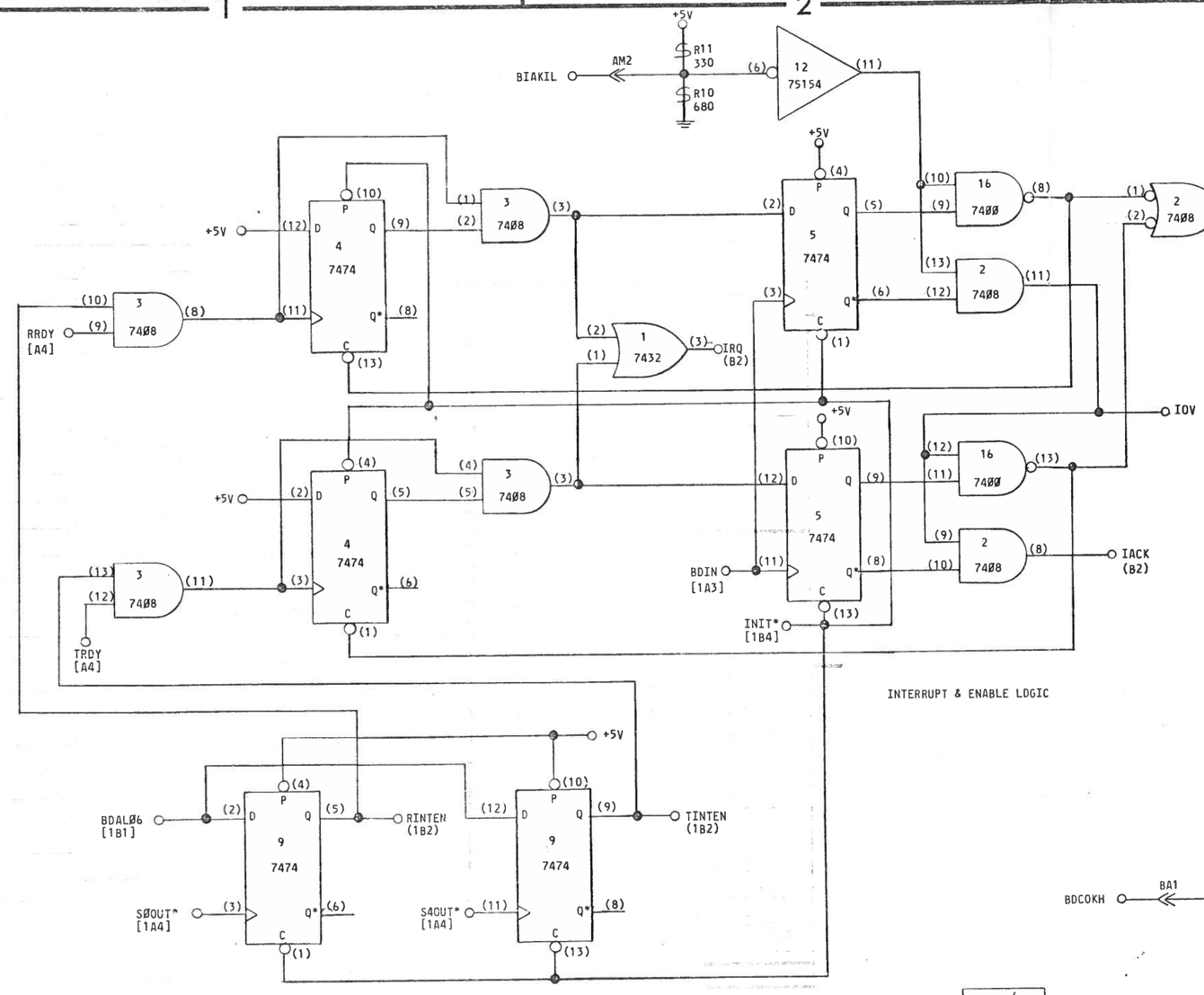

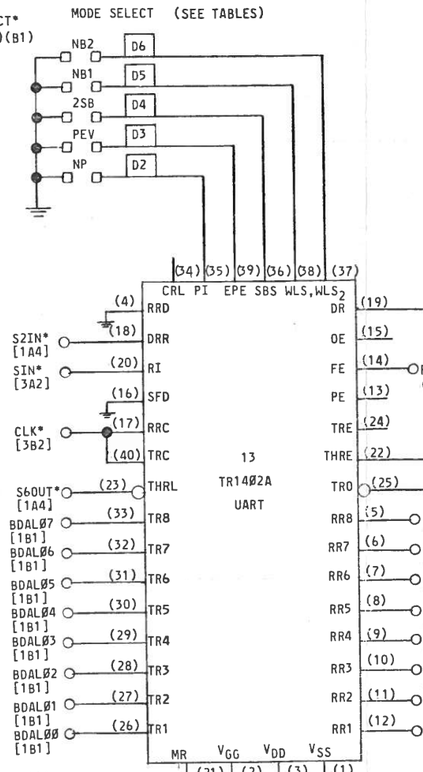

MODE SELECT	NB1	NB2	2SB	PEV	NP
NO. OF BITS: 5	I	I			
6	R	I			
7	I	I			
8	R	R			
STOP BITS: 1			I		
2			R		
PARITY: NO				X	R
ODD				I	I
EVEN				R	I

NOTE:
I = INSTALLED
R = REMOVED
X = DON'T CARE

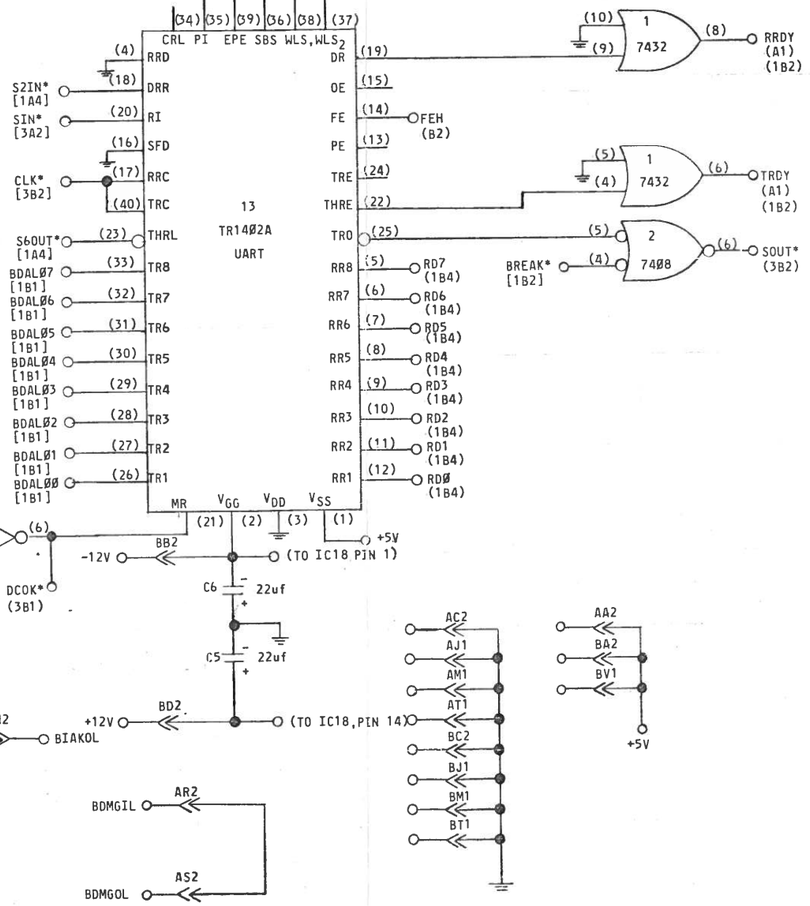

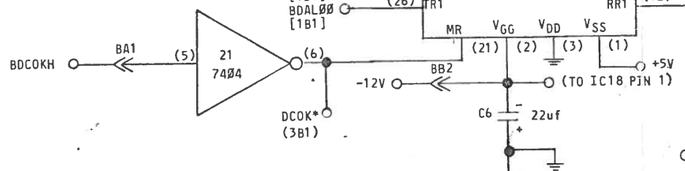

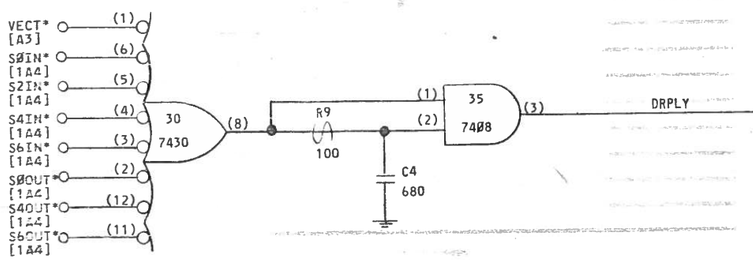

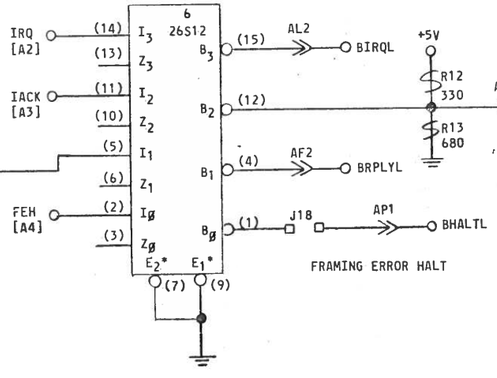

THIS DOCUMENT IS THE EXCLUSIVE PROPERTY OF NUCLEAR DATA, AND MAY NOT BE REPRODUCED, NOR MAY THE INFORMATION CONTAINED THEREIN OR DERIVABLE THEREFROM BE USED IN ANY MANNER, EXCEPT BY WRITTEN PERMISSION OF NUCLEAR DATA. THE PROPRIETARY RIGHTS TO THE AFORESAID INFORMATION, OF A PATENTABLE OR UNPATENTABLE NATURE, ARE EXPRESSLY RESERVED TO NUCLEAR DATA.

ECN	DATE
REVISIONS	

NUCLEAR DATA

LOGIC DIAGRAM
ND600/660 SERIAL INTERFACE

ND-TYM

DRAWN BY: THJ	CHECKED BY:	SHEET 2 OF 5
DATE DRAWN: 8/23/77	APPROVED BY: VdH	S70-2437-02

R4 = 22 FOR 12V RELAY
270 FOR 6V RELAY

JUMPER	DATA TERM	DATA SET
J1	RSC-2	RSC-3
J2	RSC-3	RSC-2
J3	RSC-4	RSC-5
J4	RSC-5	RSC-4
J5	RSC-6	RSC-20
J6	RSC-20	RSC-6

S6OUT* [1A4] J7 B6 (10) P Q (9) FETCH (B2)
BDAL0Ø [1B1] (12) D
SØOUT* [1A4] (11) CK Q* (8)
C (13)
15 7474

+5V (11) LD (15) A (1) B (10) C (9) D
CLK* [B2] (5)
+5V (4)
23 74LS193
CRY (12) BRW (13)
CLR (14) Q_A (3) Q_B (2) Q_C (6) Q_D (7)

SIN* [A2] (12) (13) 1 7432 (11)
INIT [1B3] (5) (6) 22 74Ø2 (4)

+12V R4 J12 RSC-17 RDREN+
+5V (8) CR2 1N4004
J13 RSC-18 RDREN-
(1) (2) 17 75453 1/2 (3) (4)

+5V R5 4.7K
RSC-19 SERIN- J1Ø CR1 1N4004 R3 220
(1) (5) 11 TIL 112 (2) (6) (4)
CL2
C1 .01
(5) 27 75154 (12) J8 J9 SIN* (2A3) (A1)
RSC-3 EIAIN J2 (4) 27 75154 (13)

RSC-16 SERIN+ CL1 R1 470 +12V

RSC-4 REQ TO SND J3 (6) 27 75154 (11)
(2) (3) 22 74Ø2 (1) DSTAT (1B2)
RSC-2Ø DATA TERM RDY J6 (7) 27 75154 (10)

SOUT* [2A4] (6) (7) 17 75453 1/2 (8) (5) (4)

-12V R2 470 CL4 RSC-15 SEROUT+

+5V R6 200
(1) (5) 10 TIL 112 (2) (6) (4)
R7 68K
Q1 2N4126
CR4 1N4004
CR3 MCL13Ø1 (SEE NOTES SHEET 1)
J11 RSC-14 SEROUT-
CL3

(2) 18 1488 (3) J1 RSC-2 EIAOUT

FETCH [A2] J14 A2 (9) 21 74Ø4 (8) FETCH* (4,5)
18 1488 (6) J4 RSC-5 CLR TO SND

(9,10) 18 1488 (8) J5 RSC-6 DATA SET RDY
(12,13) 18 1488 (11) RSC-8 CARRIER (REC'D LINE SIGNAL DET.)

RSC-7 SIGNAL GND
RSC-1 PROTECTIVE GND

C3 33
2.4576 MHZ
R8 10M
C2 33
NC (4) (9) (1) (2) (3)
ECP* CO $Q_Ø$ Q_1 Q_2
IX (7)
OX (6)
IM
31 34702
Z (10) (11) 21 74Ø4 (10) CLK* (2A3)(A1)
EXT CLK BH1 (15)
CP $S_Ø$ S_1 S_2 S_3
(5) (14) (13) (12) (11)
DCOK* [2B3]
FRØ FR1 FR2 FR3
BAUD RATE SELECTION (SEE TABLE)

THIS DOCUMENT IS THE EXCLUSIVE PROPERTY OF NUCLEAR DATA, AND MAY NOT BE REPRODUCED, NOR MAY THE INFORMATION CONTAINED THEREIN OR DERIVABLE THEREFROM BE USED IN ANY MANNER, EXCEPT BY WRITTEN PERMISSION OF NUCLEAR DATA. THE PROPRIETARY RIGHTS TO THE AFORESAID INFORMATION, OF A PATENTABLE OR UNPATENTABLE NATURE, ARE EXPRESSLY RESERVED TO NUCLEAR DATA.

ECN	DATE
REVISIONS	

NUCLEAR DATA

LOGIC DIAGRAM
ND600/660 SERIAL INTERFACE
ND-TYM

DRAWN BY: THJ	CHECKED BY:	SHEET 3 OF 5
DATE DRAWN: 8/24/77	APPROVED BY:	S70-2437-02

FIGURE 1
20mA CURRENT LOOP

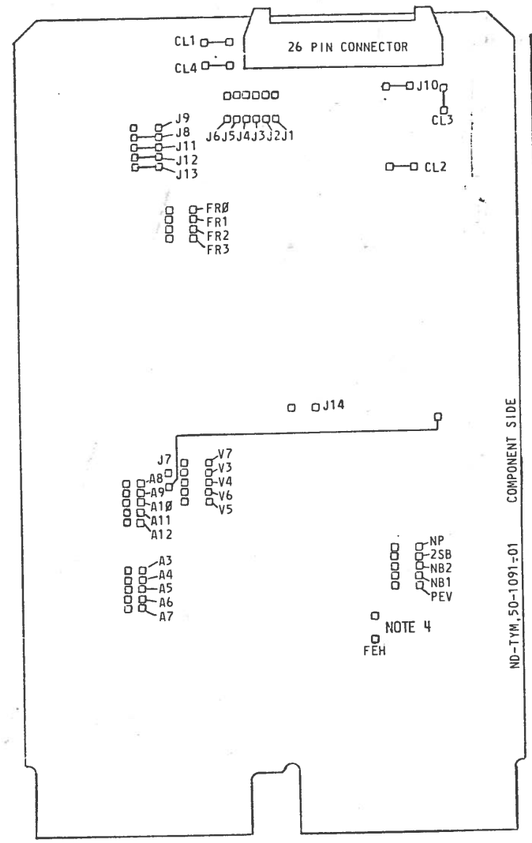

FIGURE 2
RS232 DATA SET
NOTE 5

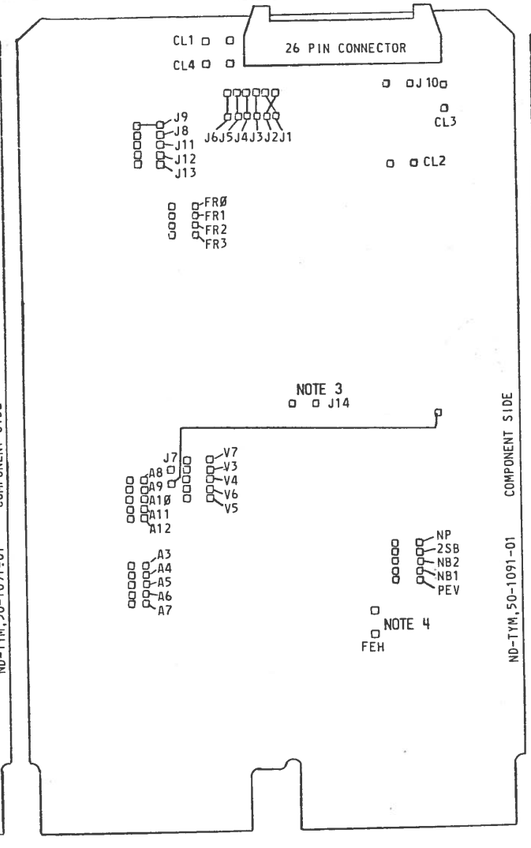

FIGURE 3
RS232 DATA TERMINAL
NOTE 5

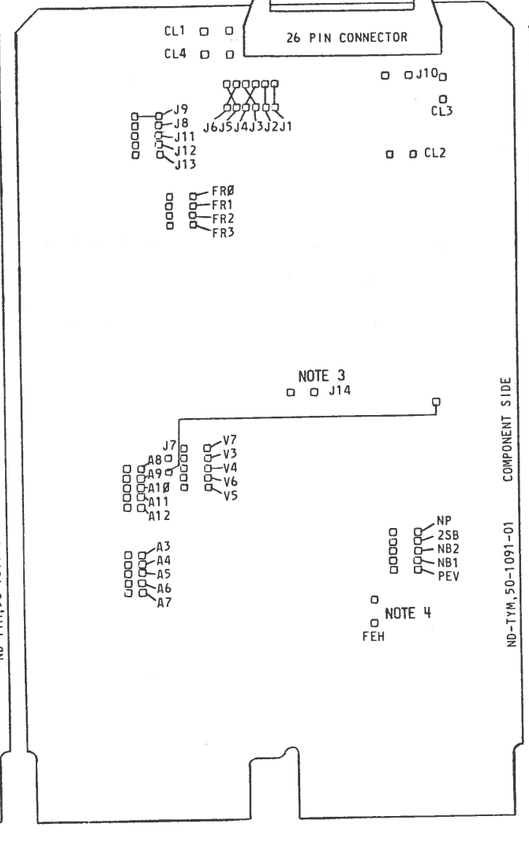

FIGURE 4

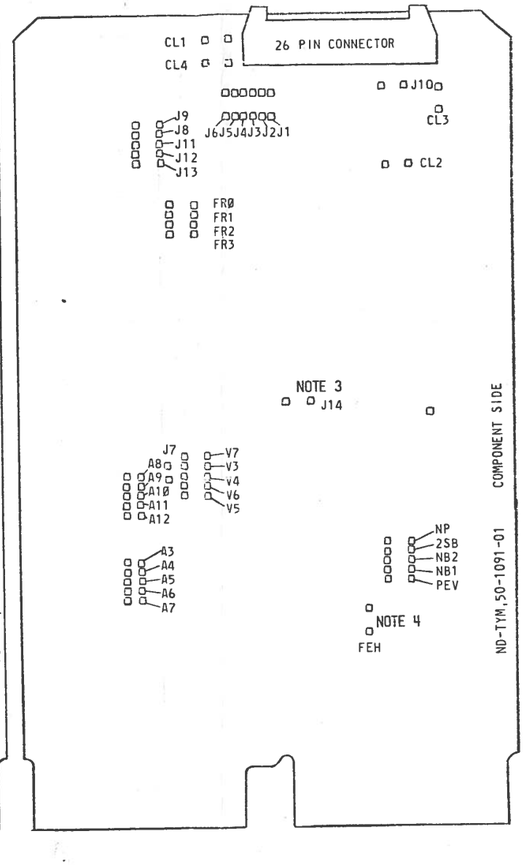

TABLE 1
BAUD RATE TABLE

BAUD RATE	FR3	FR2	FR1	FRØ
50	I	I	R	I
75	I	I	R	R
110	R	R	R	R
134.5	I	R	I	I
150	R	R	R	I
200	I	R	I	R
300	R	R	I	R
600	I	R	R	I
1200	R	I	R	R
1800	R	I	R	I
2400	I	R	R	R
2400	R	R	I	I
4800	R	I	I	R
9600	R	I	I	I
EXTERNAL (VIA PIN BH1)	I	I	I	X

NOTE: I = INSTALLED R = REMOVED X = DON'T CARE

TABLE 2
CHARACTER FORMAT TABLE

JUMPER DESIGNATION	JUMPER STATE	NOTES	FUNCTION
NP	R		NO PARITY
2SB	R	1	TWO STOP BITS
N82	R	2	EIGHT DATA BITS
NB1	R	2	
PEV	R		EVEN PARITY IF NP INSTALLED

TABLE 3
DRIVER ADDRESS AND VECTOR TABLE

DRIVER	ADDRESS →	INSTALL	VECTOR →	INSTALL
TTY	17756Ø	A7 & A3	6Ø	V7,V6 & V3
SU1	17766Ø	A6 & A3	6Ø	V7,V6 & V3
SU2	17757Ø	A7	7Ø	V7 & V6

NOTES;

1. WHEN INSTALLED = 1 STOP BIT
2. NO. OF DATA BITS

	NB1	NB2
5	I	I
6	R	I
7	I	R
8	R	R

3. J14 INSTALLED FOR DYNAMIC "CLEAR TO SEND."
4. FRAMING ERROR HALT JUMPER (FEH) NORMALLY IS NOT INSTALLED. IT IS ONLY REQUIRED FOR CONSOLE PROGRAMMING.
5. RS232 DATA SET/TERMINAL NOMENCLATURE IDENTIFIES THE TYM CONFIGURATION.

THIS DOCUMENT IS THE EXCLUSIVE PROPERTY OF NUCLEAR DATA, AND MAY NOT BE REPRODUCED, NOR MAY THE INFORMATION CONTAINED THEREIN, OR DERIVABLE THEREFROM BE USED IN ANY MANNER EXCEPT BY WRITTEN PERMISSION OF NUCLEAR DATA, OF A PATENTABLE OR INFORMATION, RIGHTS TO THE AFORESAID INFORMATION PATENTABLE NATURE, ARE EXPRESSLY RESERVED TO NUCLEAR DATA.

ECN	DATE
REVISIONS	

NUCLEAR DATA

LOGIC DIAGRAM
ND600/660 SERIAL INTERFACE
(ND-TYM) (TYPICAL STRAPPING CONFIGURATIONS)

DRAWN BY: THJ	CHECKED BY:	SHEET 4 OF 5
DATE DRAWN: 4/25/78	APPROVED BY:	S70-2437-02

RCS CONN.			
PIN	SIGNAL	PIN	SIGNAL
1	PROT. GND	14	SEROUT- [3A3]
2	EIAOUT [3B4]	15	SEROUT+ [3A3]
3	EIAIN [3A2]	16	SERIN+ [3A1]
4	REQ TO SND [3B1]	17	RDREN+ [3A3]
5	CLR TO SND [3B4]	18	RDREN- [3A3]
6	DATA SET RDY [3B4]	19	SERIN- [3A1]
7	SIGNAL GND	20	DATA TERM RDY [3B1]
8	CARRIER [3B4]	21	
9		22	
10		23	
11		24	
12		25	
13		26	

PERIPHERAL	TTY	TI7XX	TI7XX	LA36	SDCC	SDCC	RS232	
IODRVR FW	IOD1	IOD1	IOD1	IOD1	IOD1	IOD1	IOD1	
DRIVER	TTY	TTY	TTY	TTY	SU2	SU2	SU1	
BASIC CONFIGURATION	CL	DS	DS	CL	DT	DT	DS	
FIGURE	1	2	2	1	3	3	2	
BAUD RATE	110	300	1200	300	2400	9600	300	
FR3	R	R	R	R	I	R	R	
FR2	R	R	I	R	R	I	R	
FR1	R	I	R	I	R	I	I	
FR0	R	R	R	R	R	I	R	
CHARACTER FORMAT								
NP	R	R	R	R	R	R	R	
2SB	R	I	I	I	I	I	I	
NB2	R	R	R	R	R	R	R	
NB1	R	R	R	R	R	R	R	
PEV	R	R	R	R	R	R	R	
DRIVER ADDRESS 177-	560	560	560	560	570	570	660	
A7	I	I	I	I	I	I	R	
A6	R	R	R	R	R	R	I	
A3	I	I	I	I	R	R	I	
DRIVER VECTOR	60	60	60	60	70	70	60	
V7	I	I	I	I	I	I	I	
V6	I	I	I	I	I	I	I	
V3	I	I	I	I	R	R	I	
DYNAMIC CONTROL	N.A.	YES	YES	YES	YES	NO	NO	
J14	I/R	I	I	I	I	R	R	
FRAMING ERROR HALT								
FEH	R	R	R	R	R	R	R	

PIN	SIGNAL	PIN	SIGNAL	PIN	SIGNAL	PIN	SIGNAL
AA1	B SPARE 1	AA2	+5V	CA1		CA2	
AB1	B SPARE 2	AB2	-12V	CB1		CB2	
AC1	B SPARE 3	AC2	GND	CC1		CC2	
AD1	B SPARE 4	AD2	+12V	CD1		CD2	
AE1	S SPARE 1	AE2	BDDUTL [1A2]	CE1		CE2	
AF1	S SPARE 2	AF2	BRPLYL [2B3]	CF1		CF2	
AH1	S SPARE 3	AH2	BDINL [1A2]	CH1		CH2	
AJ1	GND	AJ2	BSYNCL [1A1]	CJ1		CJ2	
AK1	M SPARE A	AK2	BWTBTL	CK1		CK2	
AL1	M SPARE A	AL2	BIROL [2B3]	CL1		CL2	
AM1	GND	AM2	BIAKIL [2A2]	CM1		CM2	
AN1	BDMRL	AN2	BIAKOL [2B3]	CN1		CN2	
AP1	BHALTL [2B3]	AP2	BBS7L [1A1]	CP1		CP2	
AR1	BREFL	AR2	BDMGIL [2B3]	CR1		CR2	
AS1	P SPARE 3	AS2	BDMGOL [2B3]	CS1		CS2	
AT1	GND	AT2	BINITL [1B3]	CT1		CT2	
AU1	P SPARE 1	AU2	BDAL00L [1B1]	CU1		CU2	
AV1		AV2	BDAL01L [1B1]	CV1		CV2	
BA1	BDCOK H [2B3]	BA2	+5V	DA1		DA2	
BB1	BPOK H	BB2	-12V	DB1		DB2	
BC1	S SPARE 4	BC2	GND	DC1		DC2	
BD1	S SPARE 5	BD2	+12V	DD1		DD2	
BE1	S SPARE 6	BE2	BDAL02L [1B1]	DE1		DE2	
BF1	S SPARE 7	BF2	BDAL03L [1B1]	DF1		DF2	
BH1	EXT CLK [3B1]	BH2	BDAL04L [1B1]	DH1		DH2	
BJ1	GND	BJ2	BDAL05L [1B1]	DJ1		DJ2	
BK1	M SPARE B	BK2	BDAL06L [1B1]	DK1		DK2	
BL1	M SPARE B	BL2	BDAL07L [1B1]	DL1		DL2	
BM1	GND	BM2	BDAL08L [1A1]	DM1		DM2	
BN1	BSACKL	BN2	BDAL09L [1A1]	DN1		DN2	
BP1	B SPARE 6	BP2	BDAL10L [1A1]	DP1		DP2	
BR1	BEVNTL	BR2	BDAL11L [1A1]	DR1		DR2	
BS1	P SPARE 4	BS2	BDAL12L [1A1]	DS1		DS2	
BT1	GND	BT2	BDAL13L	DT1		DT2	
BU1	P SPARE 2	BU2	BDAL14L	DU1		DU2	
BV1	+5V	BV2	BDAL15L [1A1]	DV1		DV2	

SPARES

= C2,C3,A3,D7,D8

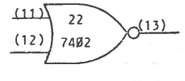

THIS DOCUMENT IS THE EXCLUSIVE PROPERTY OF NUCLEAR DATA, AND MAY NOT BE REPRODUCED, NOR MAY THE INFORMATION CONTAINED THEREIN OR DERIVABLE THEREFROM BE USED IN ANY MANNER, EXCEPT BY WRITTEN PERMISSION OF NUCLEAR DATA, OF A PATENTABLE OR UNRIGHTS TO THE AFORESAID INFORMATION, PATENTABLE NATURE, ARE EXPRESSLY RESERVED TO NUCLEAR DATA.

ECN	DATE
REVISIONS	

NUCLEAR DATA

LOGIC DIAGRAM
ND600/660 SERIAL INTERFACE

ND-TYM

DRAWN BY: THJ	CHECKED BY:	SHEET 5 OF 5
DATE DRAWN: 6/23/77	APPROVED BY:	S70-2437-02

R4 = 22 FOR 12V RELAY
270 FOR 6V RELAY

JUMPER	DATA TERM	DATA SET
J1	RSC-2	RSC-3
J2	RSC-3	RSC-2
J3	RSC-4	RSC-5
J4	RSC-5	RSC-4
J5	RSC-6	RSC-20
J6	RSC-20	RSC-6

THIS DOCUMENT IS THE EXCLUSIVE PROPERTY OF NUCLEAR DATA, AND MAY NOT BE REPRODUCED, NOR MAY THE INFORMATION CONTAINED THEREIN OR DERIVABLE THEREFROM BE USED IN ANY MANNER, EXCEPT BY WRITTEN PERMISSION OF NUCLEAR DATA. THE PROPRIETARY RIGHTS TO THE AFORESAID INFORMATION, OF A PATENTABLE OR UNPATENTABLE NATURE, ARE EXPRESSLY RESERVED TO NUCLEAR DATA.

ECN	DATE
REVISIONS	

NUCLEAR DATA

LOGIC DIAGRAM
ND600/660 SERIAL INTERFACE
ND-TYM

DRAWN BY THJ	CHECKED BY	SHEET 3 OF 5
DATE DRAWN 8/24/77	APPROVED BY	S70-2437-00

P140146 11N

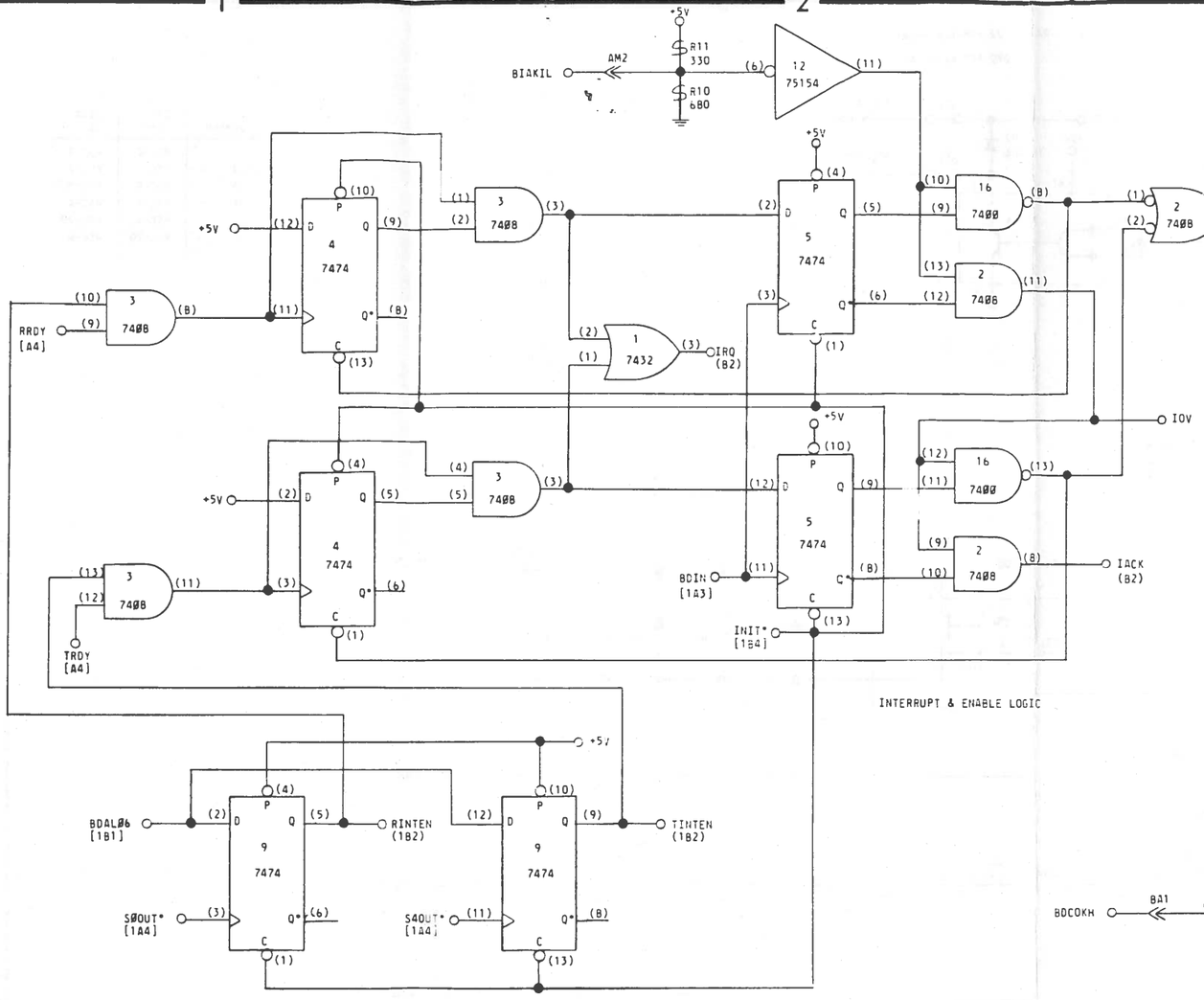

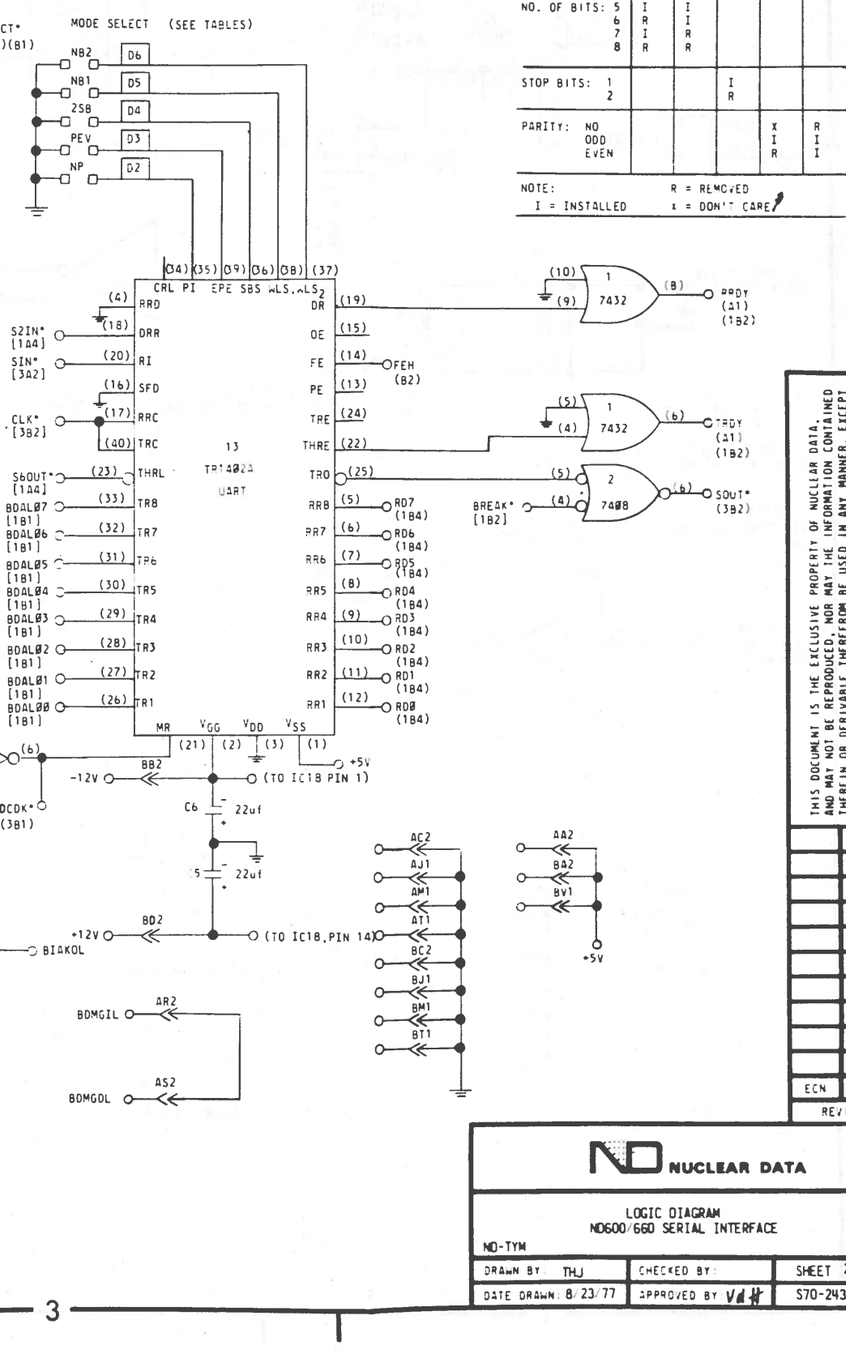

MODE SELECT	NB1	NB2	2SB	PEV	NP
NO. OF BITS: 5	I	I			
6	R	I			
7	I	R			
8	R	R			
STOP BITS: 1			I		
2			R		
PARITY: NO				X	R
ODD				I	I
EVEN				R	I

NOTE: R = REMOVED
I = INSTALLED x = DON'T CARE

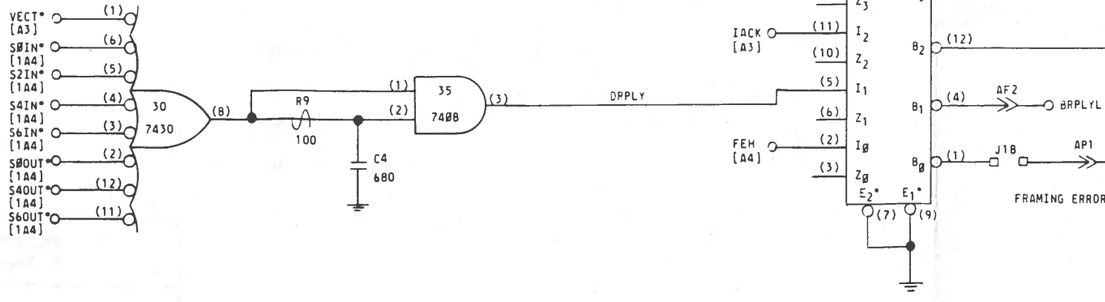

THIS DOCUMENT IS THE EXCLUSIVE PROPERTY OF NUCLEAR DATA, AND MAY NOT BE REPRODUCED, NOR MAY THE INFORMATION CONTAINED THEREIN OR DERIVABLE THEREFROM BE USED IN ANY MANNER, EXCEPT BY WRITTEN PERMISSION OF NUCLEAR DATA. THE PROPRIETARY RIGHTS TO THE AFORESAID INFORMATION, OF A PATENTABLE OR UNPATENTABLE NATURE, ARE EXPRESSLY RESERVED TO NUCLEAR DATA.

ECN	DATE
REVISIONS	

NUCLEAR DATA

LOGIC DIAGRAM
ND600/660 SERIAL INTERFACE

ND-TYM

DRAWN BY: THJ	CHECKED BY:	SHEET 2 OF 5
DATE DRAWN: 8/23/77	APPROVED BY:	S70-2437-00

PENDING ECN

FIGURE 1
20mA CURRENT LOOP

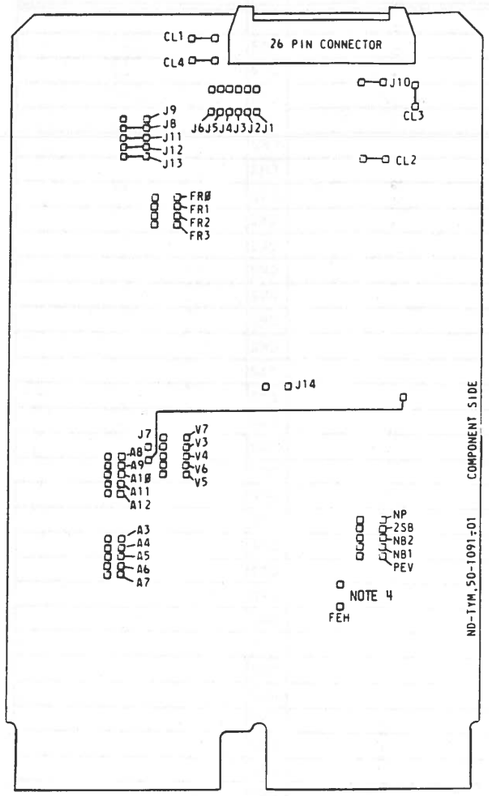

FIGURE 2
RS232 DATA SET
NOTE 5

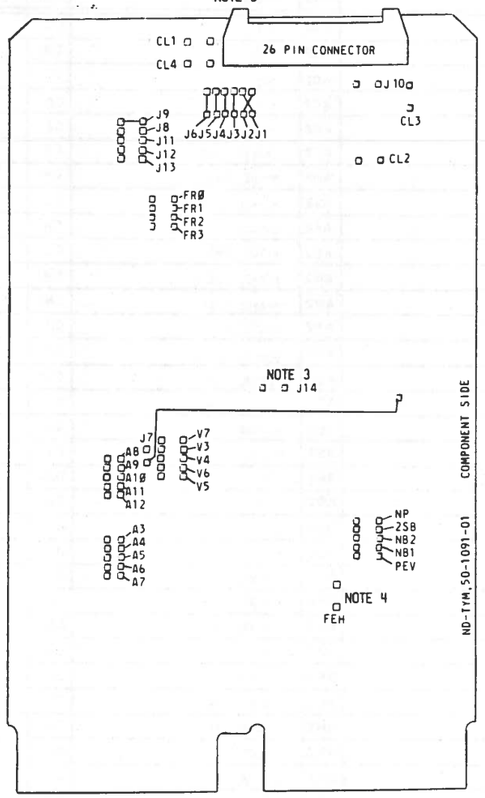

FIGURE 3
RS232 DATA TERMINAL
NOTE 5

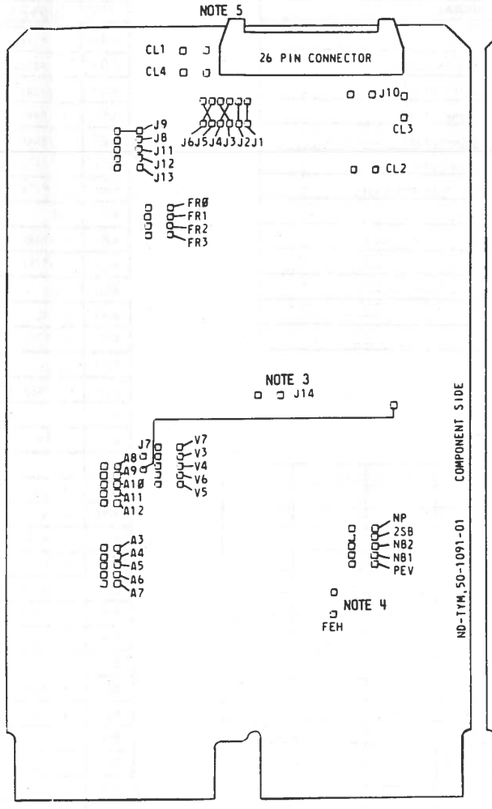

FIGURE 4

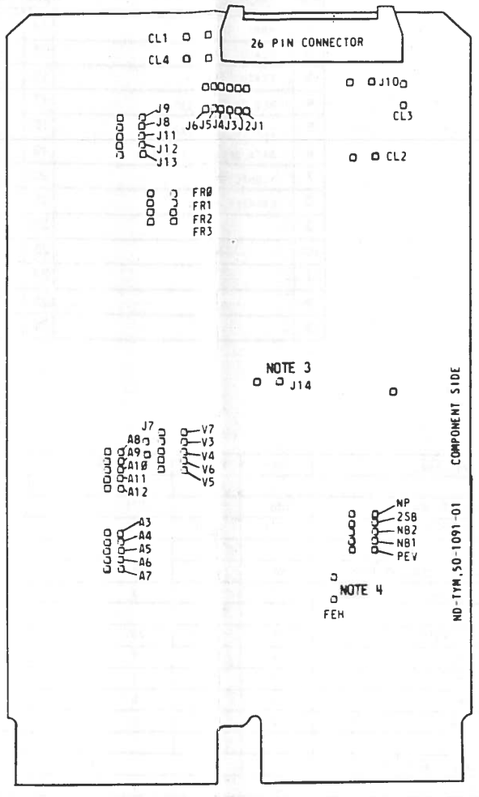

TABLE 1
BAUD RATE TABLE

BAUD RATE	FR3	FR2	FR1	FRØ
50	I	I	R	I
75	I	I	R	R
110	R	R	R	R
134.5	I	R	I	I
150	R	R	R	I
200	I	R	I	R
300	R	R	I	R
600	I	R	R	I
1200	R	I	R	R
1800	R	I	R	I
2400	I	R	R	R
2400	R	R	I	I
4800	R	I	I	R
9600	R	I	I	I
EXTERNAL (VIA PIN BH1)	I	I	I	X

NOTE: I = INSTALLED R = REMOVED X = DON'T CARE

TABLE 2
CHARACTER FORMAT TABLE

JUMPER DESIGNATION	JUMPER STATE	NOTES	FUNCTION
NP	R		NO PARITY
2SB	R	1	TWO STOP BITS
NB2	R	2	EIGHT DATA BITS
NB1	R	2	
PEV	R		EVEN PARITY IF NP INSTALLED

TABLE 3
DRIVER ADDRESS AND VECTOR TABLE

DRIVER	ADDRESS	INSTALL	VECTOR	INSTALL
TTY	177560	A7 & A3	6Ø	V7,V6 & V3
SU1	177660	A6 & A3	6Ø	V7,V6 & V3
SU2	177570	A7	7Ø	V7 & V6

NOTES;

1. WHEN INSTALLED = 1 STOP BIT
2. NO. OF DATA BITS

	NB1	NB2
5	I	I
6	R	I
7	I	R
8	R	R

3. J14 INSTALLED FOR DYNAMIC "CLEAR TO SEND "
4. FRAMING ERROR HALT JUMPER (FEH) NORMALLY IS NOT INSTALLED. IT IS ONLY REQUIRED FOR CONSOLE PROGRAMMING.
5. RS232 DATA SET/TERMINAL NOMENCLATURE IDENTIFIES THE TYM CONFIGURATION.

THIS DOCUMENT IS THE EXCLUSIVE PROPERTY OF NUCLEAR DATA, AND MAY NOT BE REPRODUCED, NOR MAY THE INFORMATION CONTAINED THEREIN BE DISCLOSED THEREFROM, USED IN ANY MANNER, EXCEPT WITH WRITTEN PERMISSION OF NUCLEAR DATA. THE PROPRIETARY RIGHTS OF THE AFORESAID INFORMATION, OF A PATENTABLE OR UNPATENTABLE NATURE, ARE EXPRESSLY RESERVED TO NUCLEAR DATA.

RCS CONN.			
PIN	SIGNAL	PIN	SIGNAL
1	PROT. GND	14	SEROUT- [3A3]
2	EIAOUT [3B4]	15	SEROUT+ [3A3]
3	EIAIN [3A2]	16	SERIN+ [3A1]
4	REQ TO SND [3B1]	17	RDREN+ [3A3]
5	CLR TO SND [3B4]	18	RDREN- [3A3]
6	DATA SET RDY [3B4]	19	SERIN- [3A1]
7	SIGNAL GND	20	DATA TERM RDY [3B1]
8	CARRIER [3B4]	21	
9		22	
10		23	
11		24	
12		25	
13		26	

PERIPHERAL	TTY	TI7XX	TI7XX	LA36	SDCC	SDCC	RS232	
IODRVR FW	IOD1	IOD1	IOD1	IOD1	IOD1	IOD1	IOD1	
DRIVER	TTY	TTY	TTY	TTY	SU2	SU2	SU1	
BASIC CONFIGURATION	CL	DS	DS	CL	DT	DT	DS	
FIGURE	1	2	2	1	3	3	2	
BAUD RATE	110	300	1200	300	2400	9600	300	
FR3	R	R	R	R	I	R	R	
FR2	R	R	I	R	R	I	R	
FR1	R	I	R	I	R	I	I	
FR0	R	R	R	R	R	I	R	
CHARACTER FORMAT								
NP	R	R	R	R	R	R	R	
2SB	R	I	I	I	I	I	I	
NB2	R	R	R	R	R	R	R	
NB1	R	R	R	R	R	R	R	
PEV	R	R	R	R	R	R	R	
DRIVER ADDRESS 177-	560	560	560	560	570	570	660	
A7	I	I	I	I	I	I	R	
A6	I	I	I	I	R	R	I	
A3	I	I	I	I	R	R	I	
DRIVER VECTOR	60	60	60	60	70	70	60	
V7	I	I	I	I	I	I	I	
V6	I	I	I	I	I	I	I	
V3	I	I	I	I	R	R	I	
DYNAMIC CONTROL	N.A.	YES	YES	YES	YES	NO	NO	
J14	I/R	I	I	I	I	R	R	
FRAMING ERROR HALT								
FEH	R	R	R	R	R	R	R	

PIN	SIGNAL	PIN	SIGNAL	PIN	SIGNAL	PIN	SIGNAL
AA1	B SPARE 1	AA2	+5V	CA1		CA2	
AB1	B SPARE 2	AB2	-12V	CB1		CB2	
AC1	B SPARE 3	AC2	GND	CC1		CC2	
AD1	B SPARE 4	AD2	+12V	CD1		CD2	
AE1	S SPARE 1	AE2	BDOUTL [1A2]	CE1		CE2	
AF1	S SPARE 2	AF2	BRPLYL [2B3]	CF1		CF2	
AH1	S SPARE 3	AH2	BDINL [1A2]	CH1		CH2	
AJ1	GND	AJ2	BSYNCL [1A1]	CJ1		CJ2	
AK1	M SPARE A	AK2	BWTBTL	CK1		CK2	
AL1	M SPARE A	AL2	BIROL [2B3]	CL1		CL2	
AM1	GND	AM2	BIAKIL [2A2]	CM1		CM2	
AN1	BDMRL	AN2	BIAKOL [2B3]	CN1		CN2	
AP1	BMAITL [2B3]	AP2	BBS7L [1A1]	CP1		CP2	
AR1	BREFL	AR2	BDMGIL [2B3]	CR1		CR2	
AS1	P SPARE 3	AS2	BDMGOL [2B3]	CS1		CS2	
AT1	GND	AT2	BINITL [1B3]	CT1		CT2	
AU1	P SPARE 1	AU2	BDAL00L [1B1]	CU1		CU2	
AV1		AV2	BDAL01L [1B1]	CV1		CV2	
BA1	BDCOK H [2B3]	BA2	+5V	DA1		DA2	
BB1	BPOK H	BB2	-12V	DB1		DB2	
BC1	S SPARE 4	BC2	GND	DC1		DC2	
BD1	S SPARE 5	BD2	+12V	DD1		DD2	
BE1	S SPARE 6	BE2	BDAL02L [1B1]	DE1		DE2	
BF1	S SPARE 7	BF2	BDAL03L [1B1]	DF1		DF2	
BH1	EXT CLK [3B1]	BH2	BDAL04L [1B1]	DH1		DH2	
BJ1	GND	BJ2	BDAL05L [1B1]	DJ1		DJ2	
BK1	M SPARE B	BK2	BDAL06L [1B1]	DK1		DK2	
BL1	M SPARE B	BL2	BDAL07L [1B1]	DL1		DL2	
BM1	GND	BM2	BDAL08L [1A1]	DM1		DM2	
BN1	BSACKL	BN2	BDAL09L [1A1]	DN1		DN2	
BP1	B SPARE 6	BP2	BDAL10L [1A1]	DP1		DP2	
BR1	BEVNTL	BR2	BDAL11L [1A1]	DR1		DR2	
BS1	P SPARE 4	BS2	BDAL12L [1A1]	DS1		DS2	
BT1	GND	BT2	BDAL13L	DT1		DT2	
BU1	P SPARE 2	BU2	BDAL14L	DU1		DU2	
BV1	+5V	BV2	BDAL15L [1A1]	DV1		DV2	

SPARES

= C2,C3,A3,D7,D8

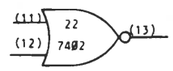

THIS DOCUMENT IS THE EXCLUSIVE PROPERTY OF NUCLEAR DATA, AND MAY NOT BE REPRODUCED, NOR MAY THE INFORMATION CONTAINED THEREIN OR DERIVABLE THEREFROM BE USED IN ANY MANNER, EXCEPT BY WRITTEN PERMISSION OF NUCLEAR DATA. OF A PATENTABLE OR UNPATENTABLE NATURE, ARE EXPRESSLY RESERVED TO NUCLEAR DATA.

ECN	DATE
REVISIONS	

NUCLEAR DATA

LOGIC DIAGRAM
ND600/660 SERIAL INTERFACE

ND-TYM

DRAWN BY: TMJ	CHECKED BY:	SHEET 5 OF 5
DATE DRAWN: 8/23/77	APPROVED BY: [illegible]	S70-2437-00

PEM MG ECN

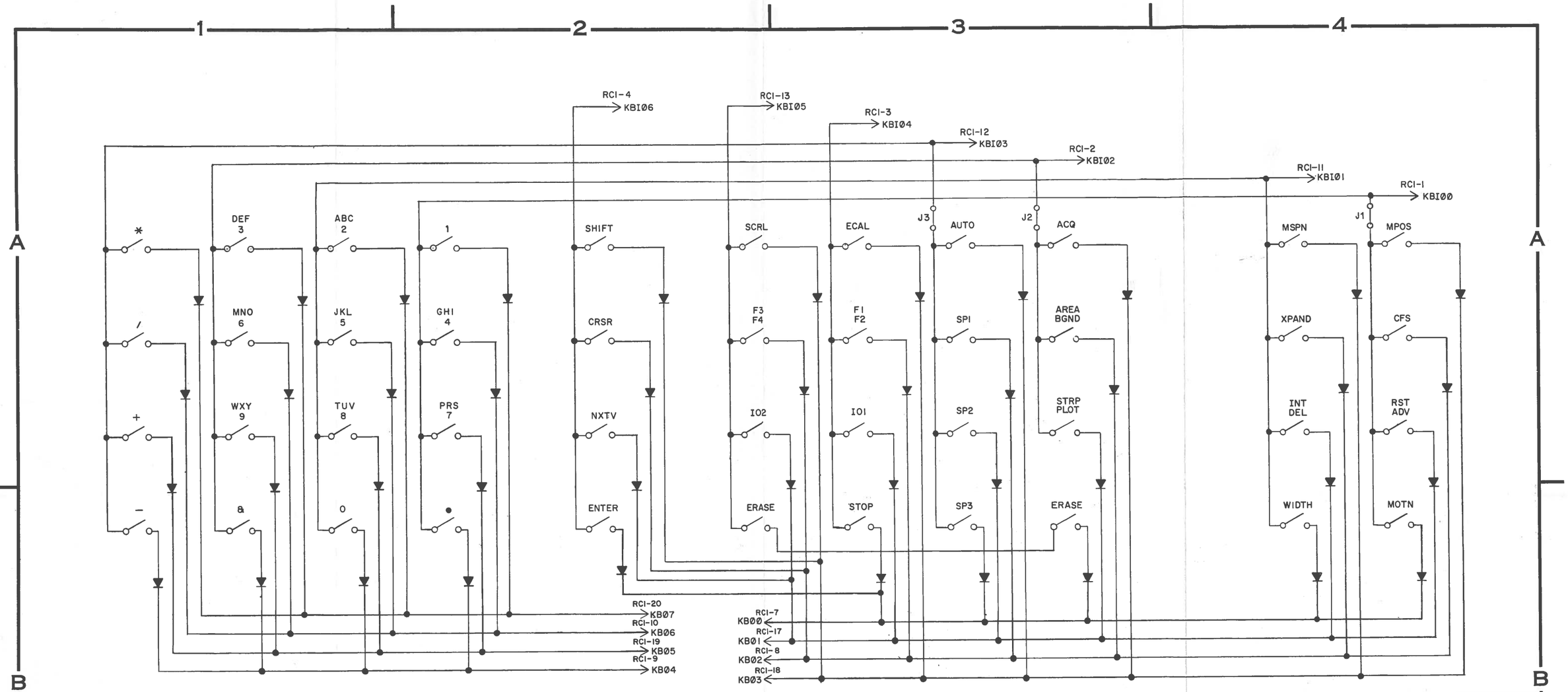

ECN	DATE
REVISIONS	

NOTES:

1 - ALL DIODES ARE G964 OR EQUIVALENT, EXCEPT AS NOTED.
2 - ALL RESISTORS ARE 1/4W, ±5%, EXCEPT AS NDTED.
3 - ALL CAPACITORS ARE pf, EXCEPT AS NOTED.
4 - I.C. VOLTAGES, EXCEPT AS NOTED:
14 PIN DIP, PIN (7) GND: PIN (14) +5V
16 PIN DIP, PIN (8) GND: PIN (16) +5V
24 PIN DIP, PIN (12) GND: PIN (24) +5V

5 - THE FOLLOWING SYMBOLS/NOTATIONS ARE USED ON THE DIAGRAM AND/OR PRINTED CIRCUIT BOARD ASSEMBLY.

IC - INTEGRATED CIRCUIT
Q - TRANSISTOR
( ) - IC PIN DESIGNATION
- CONNECTOR DESIGNATION
NC - NO CONNECTION
SAT - SELECT AT TEST
(P1) - PRECISION RESISTORS 100PPM 1/8W, ±1% METAL FILM
- DC COMMON
FB - FERRITE BEAD
- GERMANIUM DIODE
- SILICON DIODE
- ZENER DIODE
- TUNNEL DIODE
- SELENIUM DIODE

ADC* — SIGNAL NAME
[4A2] — SIGNAL SOURCE DRAWING LOCATION, OR
(4A2) — SIGNAL LOAD DRAWING LOCATION
ZONE LOCATION
SHEET NUMBER

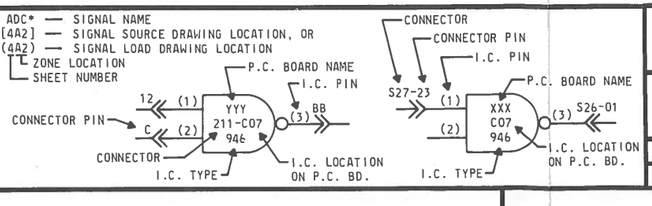

NUCLEAR DATA INC
POST OFFICE BOX 451, PALATINE, ILLINOIS 60067

SCHEMATIC DIAGRAM
ND-600 KEYBOARD
(ND-KBM)

DRAWN BY: JSP	CHECKED BY:	SHEET 1 OF 1
DATE DRAWN: 2-25-77	APPROVED BY:	S70-2436-00

PENDING ECN

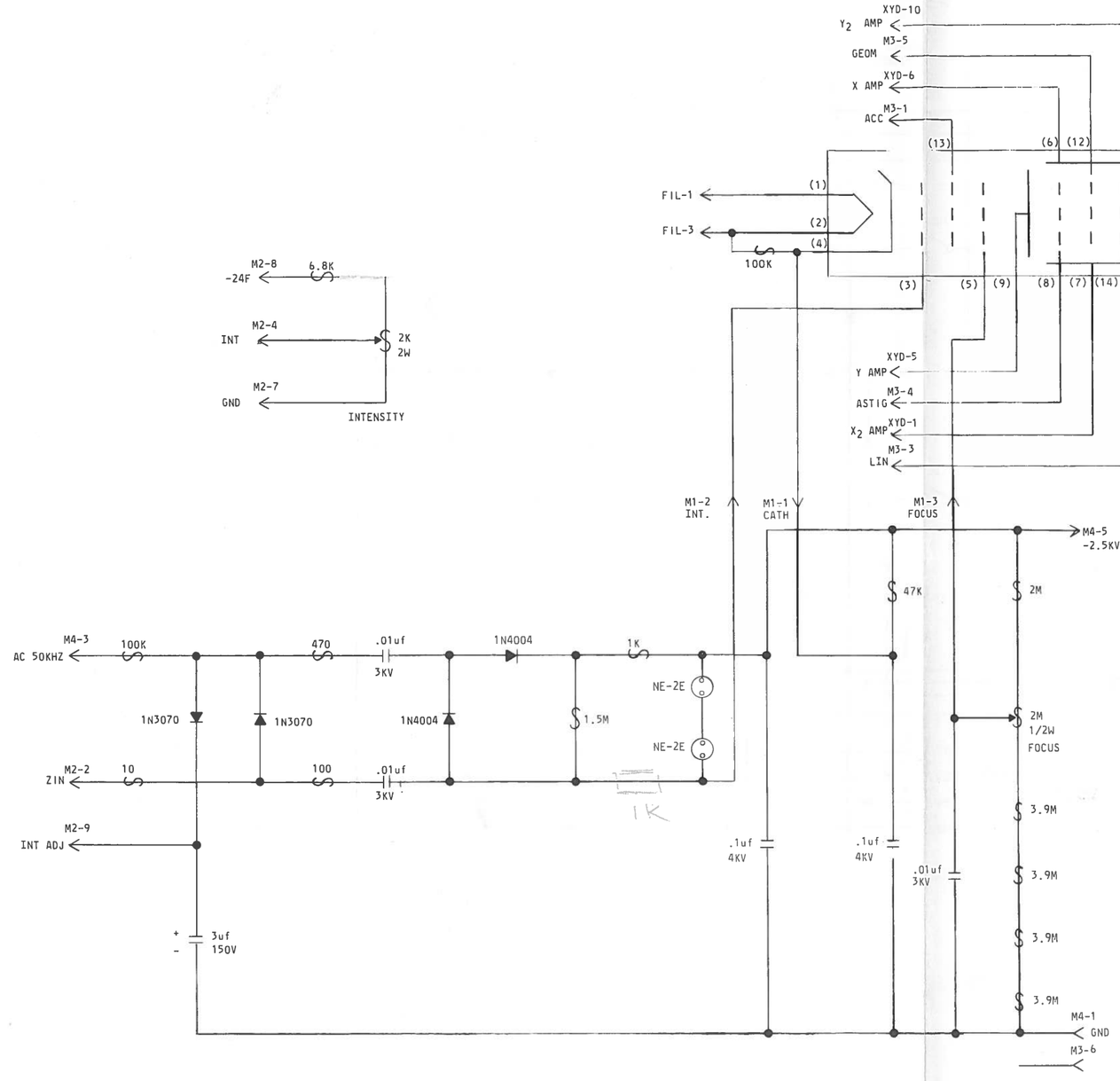

M4	HVI	(MOLEX TO HVS)
PIN	SIGNAL	
1	GND	
2		
3	AC 50 KHZ	
4		
5	-2.5 KV	

M1	HVO	(MOLEX TO CRT)
PIN	SIGNAL	
1	CATHODE	
2	INTENSITY	
3	FOCUS	
4		
5		

M3	CTO	(MOLEX TO CRT)
PIN	SIGNAL	
1	ACCELERATION	
2		
3	LINEARITY	
4	ASTIGMATISM	
5	GEOMETRY	
6		

M2	XYO		(TO XYZ)
PIN	SIGNAL	PIN	SIGNAL
1	LINEARITY	6	GND
2	Z IN	7	GND
3	ACCELERATION	8	-24F
4	INTENSITY	9	INTENSITY ADJUST
5	ASTIGMATISM	10	GEOMETRY

THIS DOCUMENT IS THE EXCLUSIVE PROPERTY OF NUCLEAR DATA, AND MAY NOT BE REPRODUCED, NOR MAY THE INFORMATION CONTAINED THEREIN OR DERIVABLE THEREFROM BE USED IN ANY MANNER, EXCEPT BY WRITTEN PERMISSION OF NUCLEAR DATA, THE PROPRIETARY RIGHTS TO THE AFORESAID INFORMATION, OF A PATENTABLE OR UNPATENTABLE NATURE, ARE EXPRESSLY RESERVED TO NUCLEAR DATA.

ECN	DATE

REVISIONS

PENDING ECN

NUCLEAR DATA

CRT CONTROL

(L88-0598)

DRAWN BY: S.F.G.	CHECKED BY:	SHEET 1 OF 1
DATE DRAWN: 5-13-76	APPROVED BY:	S70-2387-00

X & Y AMPLFIER
ONE SHOWN

(Y AMP*)

XYI-1
XYI-7*
XIN,YIN

XYI-2,6
XYI-3,8*
X,Y GND

NOTE 1
2.49K(P1) ON Y ONLY

X,Y POS-

POS-10
POS-6*

POS-5
POS-1*

GAIN

Q22 Q12* 2N5172
Q24 Q14* 2N5172
Q26 Q16* 2N5172
Q27 Q15* 2N5172
Q33 Q11* 2N5172
Q25 Q13* 2N5172
Q30 Q1B* 2N3866
Q29 Q17* 2N3866
Q28 Q21* 2N3866
Q32 Q20* D40N1
Q31 Q19* D40N1

1N5245B

XYD-6
XYD-5*
XYD-1
XYD-10*

XYO-9
INT. ADJ.

GEOM XYO-10
ASTIG XYO-5
ACCIL XYO-3
LIN XYO-1

XYP-3 -24
XYP-5 +200 (Y ONLY)
XYP-1 +24

Z AMPLIFIER

XYI-4
ZIN

XYI-5,9
Z GND

Q1 2N4249
Q2 2N4249
Q3 2N4249
Q4 2N4249
Q5 2N4249
Q10 2N5172
Q6 2N3565
Q7 2N3565
Q8 2N4928S
Q9 D40N1

1N4153
1N5525B
1N5267B
1N4148

XYO-2
Z OUT

XYO-4
INT. POT

XYP-3 -24
XYP-1 +24
XYP-5 +200 (X+Z)

NOTE 1:
1.0K ±1% (X AMP)
2.49K ±1% (Y AMP)

THIS DOCUMENT IS THE EXCLUSIVE PROPERTY OF NUCLEAR DATA, INC. AND MAY NOT BE REPRODUCED, NOR MAY THE INFORMATION CONTAINED THEREIN OR DERIVABLE THEREFROM BE USED IN ANY MANNER, EXCEPT BY WRITTEN PERMISSION OF NUCLEAR DATA, INC. THE PROPRIETARY RIGHTS TO THE AFORESAID INFORMATION, OF A PATENTABLE OR UNPATENTABLE NATURE, ARE EXPRESSLY RESERVED TO NUCLEAR DATA, INC.

ECN	DATE
1597	4-5-77
1593	2-25-77
1592	1-19-77

REVISIONS

PENDING ECN

NUCLEAR DATA INC
POST OFFICE BOX 451, PALATINE, ILLINOIS 60067

XYZ BOARD

(L88-0598)

DRAWN BY: S.F.G.	CHECKED BY:	SHEET 1 OF 2
DATE DRAWN: 4-11-75	APPROVED BY	S70-2394-03

XYP (MOLEX TO CPS)	
PIN	SIGNAL
1	+24
2	DC GND
3	-24
4	DC GND
5	+200

XYD (TO CRT DEF PLATES)			
PIN	SIGNAL	PIN	SIGNAL
1	X_2	6	X_1
2		7	
3		8	
4		9	
5	Y_1	10	Y_2

XYO (TO CRT CONTROL)			
PIN	SIGNAL	PIN	SIGNAL
1	LINEARITY	6	GND
2	ZOUT	7	GND
3	ACCELERATION	8	-24F
4	INTENSITY	9	INTENSITY AOJUST
5	ASTIGMATISM	10	GEOMETRY

POS (TO R.P. POS CONTROLS)			
PIN	SIGNAL	PIN	SIGNAL
1	Y POS -	6	Y POS +
2		7	
3	-24F	8	-24F
4		9	
5	X POS -	10	X POS +

XYI (TO R.P. INPUT CONN)			
PIN	SIGNAL	PIN	SIGNAL
1	X IN	6	GND X
2	GND X	7	Y IN
3	GND Y	8	GND Y
4	Z IN	9	GNO Z
5	GND Z	10	DC GND

THIS DOCUMENT IS THE EXCLUSIVE PROPERTY OF NUCLEAR DATA, AND MAY NOT BE REPRODUCED, NOR MAY THE INFORMATION CONTAINED THEREIN OR DERIVABLE THEREFROM BE USED IN ANY MANNER, EXCEPT BY WRITTEN PERMISSION OF NUCLEAR DATA, THE PROPRIETARY RIGHTS TO THE AFORESAID INFORMATION, OF A PATENTABLE OR UN-PATENTABLE NATURE, ARE EXPRESSLY RESERVED TO NUCLEAR DATA.

ECN	DATE
REVISIONS	

NUCLEAR DATA

XYZ BOARD

(L88-0598) (CONNECTOR TABLES)

DRAWN BY: S.F.G.	CHECKED BY:	SHEET 2 OF 2
DATE DRAWN: 5-11-76	APPROVED BY:	S70-2394-03

PENDING ECN

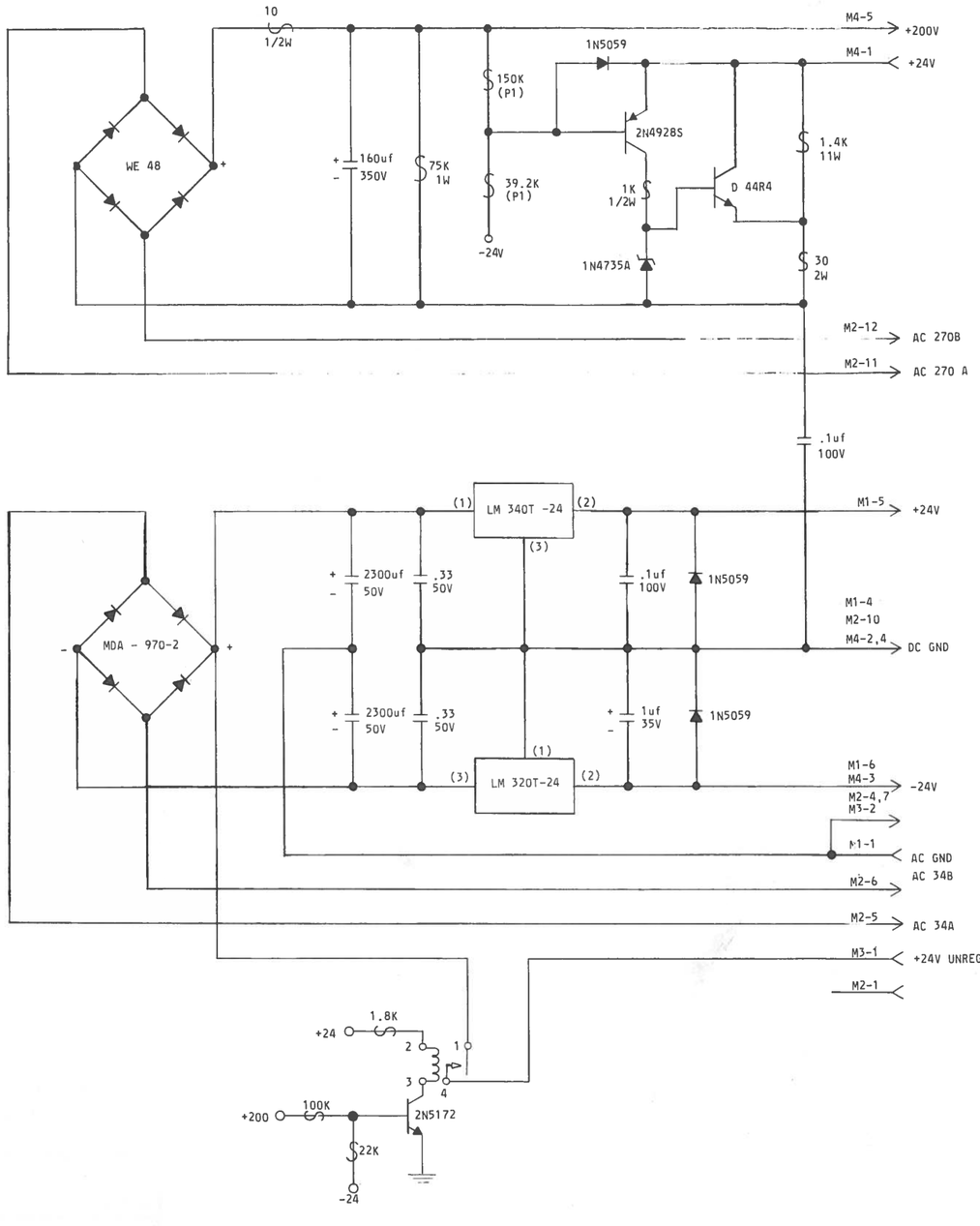

M1	PON (MOLEX TO NPS)
PIN	SIGNAL
1	AC GND
2	AC 18 A
3	AC 18 B
4	DC GND
5	+24V
6	-24V

M2	PIN (MOLEX TO TRANSFORMER)
PIN	SIGNAL
1	AC GND
2	AC GND
3	AC GND
4	AC GND
5	AC 34 A
6	AC 34 B
7	AC GND
8	AC 18 A
9	AC 18 B
10	DC GND
11	AC 270 A
12	AC 270 B

M3	PHV (MOLEX TO HVS)
PIN	SIGNAL
1	+24V UNREG
2	AC GND
3	

M4	XYP (MOLEX TO XYZ)
PIN	SIGNAL
1	+24V
2	DC GND
3	-24V
4	DC GND
5	+200V

THIS DOCUMENT IS THE EXCLUSIVE PROPERTY OF NUCLEAR DATA, AND MAY NOT BE REPRODUCED, NOR MAY THE INFORMATION CONTAINED THEREIN OR DERIVABLE THEREFROM BE USED IN ANY MANNER, EXCEPT BY WRITTEN PERMISSION OF NUCLEAR DATA, THE PROPRIETARY RIGHTS TO THE AFORESAID INFORMATION, OF A PATENTABLE OR UNPATENTABLE NATURE, ARE EXPRESSLY RESERVED TO NUCLEAR DATA.

ECN	DATE
REVISIONS	

PENDING ECN

NUCLEAR DATA

CPS BOARD

(L88-0598)

DRAWN BY: S.F.G.	CHECKED BY:	SHEET 1 OF 1
DATE DRAWN: 5-10-76	APPROVED BY:	S70-2399-00

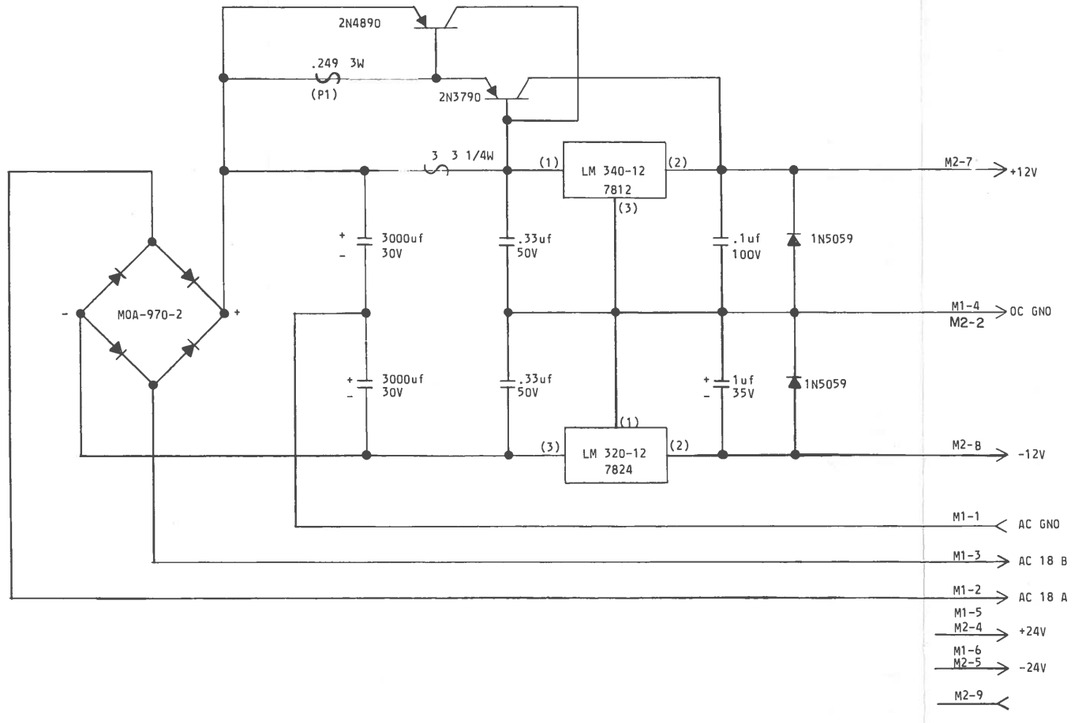

M1	PON (MOLEX TO CPS)
PIN	SIGNAL
1	AC GND
2	AC 18 A
3	AC 18 B
4	DC GND
5	+24V
6	-24V

M2	POM (MOLEX TO NIM)
PIN	SIGNAL
9	
8	-12V
7	+12V
6	
5	-24V
4	+24V
3	
2	DC GND
1	

THIS DOCUMENT IS THE EXCLUSIVE PROPERTY OF NUCLEAR DATA, AND MAY NOT BE REPRODUCED, NOR MAY THE INFORMATION CONTAINED THEREIN OR DERIVABLE THEREFROM BE USED IN ANY MANNER, EXCEPT BY WRITTEN PERMISSION OF NUCLEAR DATA, OR THE PROPRIETARY RIGHTS TO THE AFORESAID INFORMATION, OF A PATENTABLE OR UNPATENTABLE NATURE, ARE EXPRESSLY RESERVED TO NUCLEAR DATA.

ECN	DATE
REVISIONS	

NUCLEAR DATA

NPS BOARD

(L88-0598)

DRAWN BY: S.F.G.	CHECKED BY:	SHEET 1 OF 1
DATE DRAWN: 5-7-76	APPROVED BY:	S70-2400-00

PENDING ECN

CONNECTOR A			
PIN	SIGNAL	PIN	SIGNAL
A1	NC	A2	+5V
B1		B2	NC
C1		C2	GND
D1		D2	NC
E1		E2	BDOUTL J2-31 (NOT BUSED)
F1		F2	BRPLYL J2-30
H1	NC	H2	BDINL J2-29
J1	GND	J2	BSYNCL J2-28
K1	NC	K2	BWTBTL J2-27
L1	NC	L2	BIRQL J2-26
M1	GND	M2	BIAKIL J2-25
N1	BDMRL J2-34 (NOT BUSED)	N2	BIAKOL J2-24
P1	BHALTL J2-33 (NOT BUSED)	P2	BBS7L J2-23
R1	BREFL J2-32 (NOT BUSED)	R2	BDMGIL J2-22
S1	NC	S2	BDMGOL J2-21
T1	GND	T2	BINITL J2-20
U1	NC	U2	BDALØL J2-19
V1	NC	V2	BDALIL J2-18 (NOT BUSED)

CONNECTOR B			
PIN	SIGNAL	PIN	SIGNAL
A1	BDCOKH J3-34 (NOT BUSED)	A2	+5V
B1	NC	B2	NC
C1		C2	GND
D1		D2	NC
E1		E2	BDAL2L J3-31 (NOT BUSED)
F1		F2	BDAL3L J3-30
H1	NC	H2	BDAL4L J3-29
J1	GND	J2	BDAL5L J3-28
K1	NC	K2	BDAL6L J3-27
L1	NC	L2	BDAL7L J3-26
M1	GND	M2	BDAL8L J3-25
N1	BSACKL J3-33 (NOT BUSED)	N2	BDAL9L J3-24
P1	NC	P2	BDALIØL J3-23
R1	BEVNTL J3-32 (NOT BUSED)	R2	BDALIIL J3-22
S1	NC	S2	BDALI2L J3-21
T1	GND	T2	BDALI3L J3-20
U1	NC	U2	BDALI4L J3-19
V1	+5V	V2	BDALI5L J3-18 (NOT BUSED)

CONNECTOR C			
PIN	SIGNAL	PIN	SIGNAL
A1	XSPARE 1	A2	+5V
B1	XSPARE 2	B2	PSPARE
C1	XSPARE 3	C2	GND
D1	XIRQI*	D2	PSPARE
E1	XIRQ2*	E2	XDOUT*
F1	XIRQ3*	F2	XRPLY*
H1	XIRQ4*	H2	XDIN*
J1	GND	J2	XSYNC*
K1	XWAD*	K2	XWTBT*
L1	XBYAD*	L2	XSPARE 4
M1	GND	M2	XSPARE 5
N1	XIRAI*	N2	XSPARE 6
P1	XIRA2*	P2	XBS7L*
R1	XIRA3*	R2	XSPARE 7
S1	XIRA4*	S2	XSPARE 8
T1	GND	T2	XINIT*
U1	XADDR*	U2	XDALØ*
V1	+5V	V2	XDALI*

CONNECTOR D			
PIN	SIGNAL	PIN	SIGNAL
A1	XCLK	A2	+5V
B1	XSPARE 9	B2	-15V
C1	ANALOG GND	C2	GND
D1	XDMRI*	D2	+15V
E1	XDMR2*	E2	XDAL2*
F1	XDMR3*	F2	XDAL3*
H1	XDMR4*	H2	XDAL4*
J1	GND	J2	XDAL5*
K1	XDATO*	K2	XDAL6*
L1	XDATIO*	L2	XDAL7*
M1	GND	M2	XDAL8*
N1	XDMGI*	N2	XDAL9*
P1	XDMG2*	P2	XDALIØ*
R1	XDMG3*	R2	XDALII*
S1	XDMG4*	S2	XDALI2*
T1	GND	T2	XDALI3*
U1	XTMOUT*	U2	XDALI4*
V1	+5V	V2	XDALI5*

CONNECTOR J2			
PIN	SIGNAL	PIN	SIGNAL
1	GND	18	BDALIL AV2
2		19	BDALØL AU2
3		20	BINITL AT2
4		21	BDMGOL AS2
5		22	BDMGIL AR2
6		23	BBS7L AP2
7		24	BIAKOL AN2
8		25	BIAKIL AM2
9		26	BIRQL AL2
10		27	BWTBTL AK2
11		28	BSYNCL AJ2
12		29	BDINL AH2
13		30	BRPLYL AF2
14		31	BDOUTL AE2
15		32	BREFL ARI
16		33	BHALTL API
17	GND	34	BDMRL ANI

CONNECTOR J3			
PIN	SIGNAL	PIN	SIGNAL
1	GND	18	BDALI5L BV2
2		19	BDALI4L BU2
3		20	BDALI3L BT2
4		21	BDALI2L BS2
5		22	BDALIIL BR2
6		23	BDALIØL BP2
7		24	BDAL9L BN2
8		25	BDAL8L BM2
9		26	BDAL7L BL2
10		27	BDAL6L BK2
11		28	BDAL5L BJ2
12		29	BDAL4L BH2
13		30	BDAL3L BF2
14		31	BDAL2L BE2
15		32	BEVNTL BRI
16		33	BSACKL BNI
17	GND	34	BDCOKH BAI

CONNECTOR P2	
PIN	SIGNAL
1	-15V
2	ANALOG GND
3	+15V

CONNECTOR P1	
PIN	SIGNAL
1	GND
2	+5V
3	GND
4	+5V
5	GND

ND-MMB	POWER SUPPLY 39-7009		
P1	J5		
P2	J6		

PSPARE (SPARE)- NOT ASSIGNED, NOT BUSED,
CUSTOMER USAGE NOT RECOMMENDED.

XSPARE (BUS SPARE)- NOT ASSIGNED, RESERVED
FOR NUCLEAR DATA USE.
(XSPARES ARE BUSED)

THIS DOCUMENT IS THE EXCLUSIVE PROPERTY OF NUCLEAR DATA, AND MAY NOT BE REPRODUCED, NOR MAY THE INFORMATION CONTAINED THEREIN OR DERIVABLE THEREFROM BE USED IN ANY MANNER, EXCEPT BY WRITTEN PERMISSION OF NUCLEAR DATA, THE PROPRIETARY RIGHTS TO THE AFORESAID INFORMATION, OF A PATENTABLE OR UN-PATENTABLE NATURE, ARE EXPRESSLY RESERVED TO NUCLEAR DATA.

ECN	DATE

REVISIONS

PENDING ECN

NUCLEAR DATA

CONNECTOR TABLES
FOR BACKPLANE, REAR
(ND-MMB)

USED ON	DRAWN BY: RMG	CHECKED BY:	SHEET 1 OF 1
72-1375	DATE DRAWN: 3-2-77	APPROVED BY:	S70-2424-01

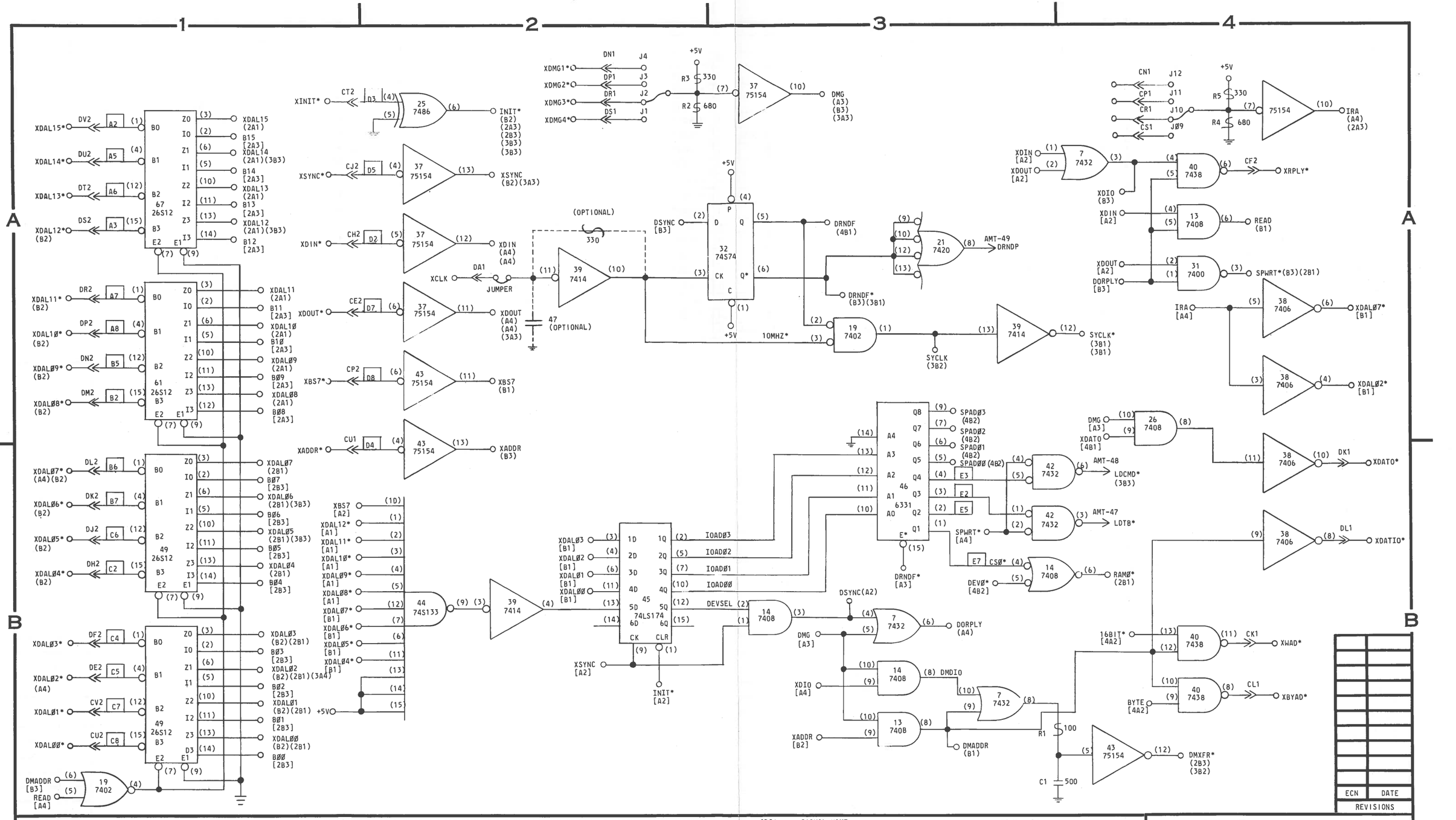
1
2
3
4
A
B
XDAL15* DV2 A2 (1) B0 Z0 (3) XDAL15 (2A1)
XDAL14* DU2 A5 (4) B1 Z1 (6) XDAL14 (2A1)(3B3)
XDAL13* DT2 A6 (12) B2 Z2 (10) XDAL13 (2A1)
XDAL12* (B2) DS2 A3 (15) B3 Z3 (13) XDAL12 (2A1)(3B3)
E2 (7) E1 (9) I0 (2) I1 (5) I2 (11) I3 (14)
67 26S12
B15 [2A3] B14 [2A3] B13 [2A3] B12 [2A3]
XDAL11* (B2) DR2 A7 (1) XDAL11 (2A1)
XDAL1Ø* (B2) DP2 A8 (4) XDALØ9* (B2) DN2 B5 (12) XDALØ8* (B2) DM2 B2 (15)
61 26S12
B11 [2A3] BØ9 [2A3] BØ8 [2A3]
XDALØ7* (A4)(B2) DL2 B6 (1) XDALØ6* (B2) DK2 B7 (4) XDALØ5* (B2) DJ2 C6 (12) XDALØ4* (B2) DH2 C2 (15)
49 26S12
BØ7 [2B3] BØ6 [2B3] BØ5 [2B3] BØ4 [2B3]
XDALØ3* DF2 C4 (1) XDALØ2* (A4) DE2 C5 (4) XDALØ1* CV2 C7 (12) XDALØØ* CU2 C8 (15)
49 26S12
BØ3 [2B3] BØ2 [2B3] BØ1 [2B3] BØØ [2B3]
DMADDR [B3] READ [A4] 19 7402
XINIT* CT2 D3 (4) (5) 25 7486 (6) INIT* (B2)(2A3)(2B3)(3B3)(3B3)
XSYNC* CJ2 D5 (4) 37 75154 (13) XSYNC (B2)(3A3)
XDIN* CH2 D2 (5) 37 75154 (12) XDIN (A4) (A4)
XDOUT* CE2 D7 (6) 37 75154 (11) XDOUT (A4) (A4) (3A3)
XBS7* CP2 D8 (6) 43 75154 (11) XBS7 (B1)
XADDR* CU1 D4 (4) 43 75154 (13) XADDR (B3)
XCLK DA1 JUMPER (11) 39 7414 (10)
(OPTIONAL) 330
47 (OPTIONAL)
DN1 J4 DP1 J3 DR1 J2 DS1 J1
XDMG1* XDMG2* XDMG3* XDMG4*
+5V R3 330 R2 680 (7) 37 75154 (10) DMG (A3) (B3) (3A3)
XBS7 [A2] XDAL12* [A1] XDAL11* [A1] XDAL1Ø* [A1] XDAL9* [A1] XDAL8* [A1] XDAL7* [B1] XDAL6* [B1] XDAL5* [B1] XDAL4* [B1] +5V
(10D) (1) (2) (3) (4) (5) (12) (7) (6) (11) (13) (14) (15)
44 74S133 (9) (3)
39 7414 (4)
XDALØ3 [B1] XDALØ2 [B1] XDALØ1 [B1] XDALØØ [B1]
1D 2D 3D 4D 5D 6D CK 1Q 2Q 3Q 4Q 5Q 6Q CLR
45 74LS174
IOADØ3 IOADØ2 IOADØ1 IOADØØ DEVSEL
XSYNC [A2] INIT* [A2]
+5V P D Q CK C 32 74S74 (4) (2) (5) (3) (6) (1)
DSYNC [B3] DRNDF (4B1) DRNDF* (B3)(3B1)
+5V 10MHZ* (2) (3) 19 7402 (1) SYCLK (3B2) (13) 39 7414 (12) SYCLK* (3B1) (3B1)
9 10 12 13 21 7420 (8) AMT-49 DRNDP
CN1 J12 CP1 J11 CR1 J10 CS1 J9
+5V R5 330 R4 680 (7) 75154 (10) IRA (A4) (2A3)
XDIN [A2] XDOUT [A2] 1 2 7 7432 3 4 5 40 7438 6 CF2 XRPLY*
XDIO (B3) XDIN [A2] 4 5 13 7408 6 READ (B1)
XDOUT [A2] DORPLY [B3] 2 1 31 7400 3 SPWRT*(B3)(2B1)
IRA [A4] 5 38 7406 6 XDALØ7* [B1]
3 38 7406 4 XDALØ2* [B1]
DMG [A3] XDATO [4B1] 10 9 26 7408 8
11 38 7406 10 DK1 XDATO*
Q8 Q7 Q6 Q5 Q4 Q3 Q2 Q1 9 7 6 5 4 3 2 1 SPADØ3 (4B2) SPADØ2 (4B2) SPADØ1 (4B2) SPADØØ (4B2)
A4 A3 A2 A1 A0 E* 14 13 12 11 10 15 46 6331
E3 E2 E5 E7 4 5 42 7432 6 AMT-48 LDCMD* (3B3)
1 2 42 7432 3 AMT-47 LDTB*
SPWRT* [A4] CSØ* 4 5 14 7408 6 RAMØ* (2B1)
DEVØ* [4B2]
DRNDF* [A3]
9 38 7406 8 DL1 XDATIO*
DSYNC(A2) DMG [A3] 3 4 5 7 7432 6 DORPLY (A4)
XDIO [A4] 10 9 14 7408 8 DMDIO
XADDR [B2] 10 9 13 7408 8
10 9 7 7432 8
DMADDR (B1)
R1 100
C1 500
5 43 75154 12 DMXFR* (2B3) (3B2)
16BIT* [4A2] 13 12 40 7438 11 CK1 XWAD*
BYTE [4A2] 10 9 40 7438 8 CL1 XBYAD*
ECN DATE
REVISIONS
NOTES:
1 - ALL DIODES ARE G964 OR EQUIVALENT, EXCEPT AS NOTED.
2 - ALL RESISTORS ARE 1/4W, ±5%, EXCEPT AS NOTED.
3 - ALL CAPACITORS ARE pf, EXCEPT AS NOTED.
4 - I.C. VOLTAGES, EXCEPT AS NOTED:
14 PIN DIP, PIN (7) GND: PIN (14) +5V
16 PIN DIP, PIN (8) GND: PIN (16) +5V
24 PIN DIP, PIN (12) GND: PIN (24) +5V
5 - THE FOLLOWING SYMBOLS/NOTATIONS ARE USED ON THE DIAGRAM AND/OR PRINTED CIRCUIT BOARD ASSEMBLY.
IC - INTEGRATED CIRCUIT
Q - TRANSISTOR
( ) - IC PIN DESIGNATION
- CONNECTOR DESIGNATION
NC - NO CONNECTION
SAT - SELECT AT TEST
(P1) - PRECISION RESISTORS 100PPM 1/8W, ±1% METAL FILM
- DC COMMON
F8 - FERRITE BEAD
A2 PULL-UP RESISTOR
- GERMANIUM DIODE
- SILICON DIODE
- ZENER DIODE
- TUNNEL DIODE
- SELENIUM DIODE
L.E.D.
ADC* — SIGNAL NAME
[4A2] — SIGNAL SOURCE DRAWING LOCATION, OR
(4A2) — SIGNAL LOAD DRAWING LOCATION
ZONE LOCATION
SHEET NUMBER
CONNECTOR PIN
CONNECTOR
I.C. TYPE
P.C. BOARD NAME
I.C. PIN
I.C. LOCATION ON P.C. BD.
YYY 211-C07 946
S27-23
S26-01
XXX C07 946
NUCLEAR DATA
LOGIC DIAGRAM
ACQUISITION CONTROLLER & DMA INTERFACE
(ND-ACM-A)
DRAWN BY: T.H.J.
CHECKED BY:
SHEET 1 OF 4
DATE DRAWN: 2-14-77
APPROVED BY:
S70-2422-00
PENDING ECN

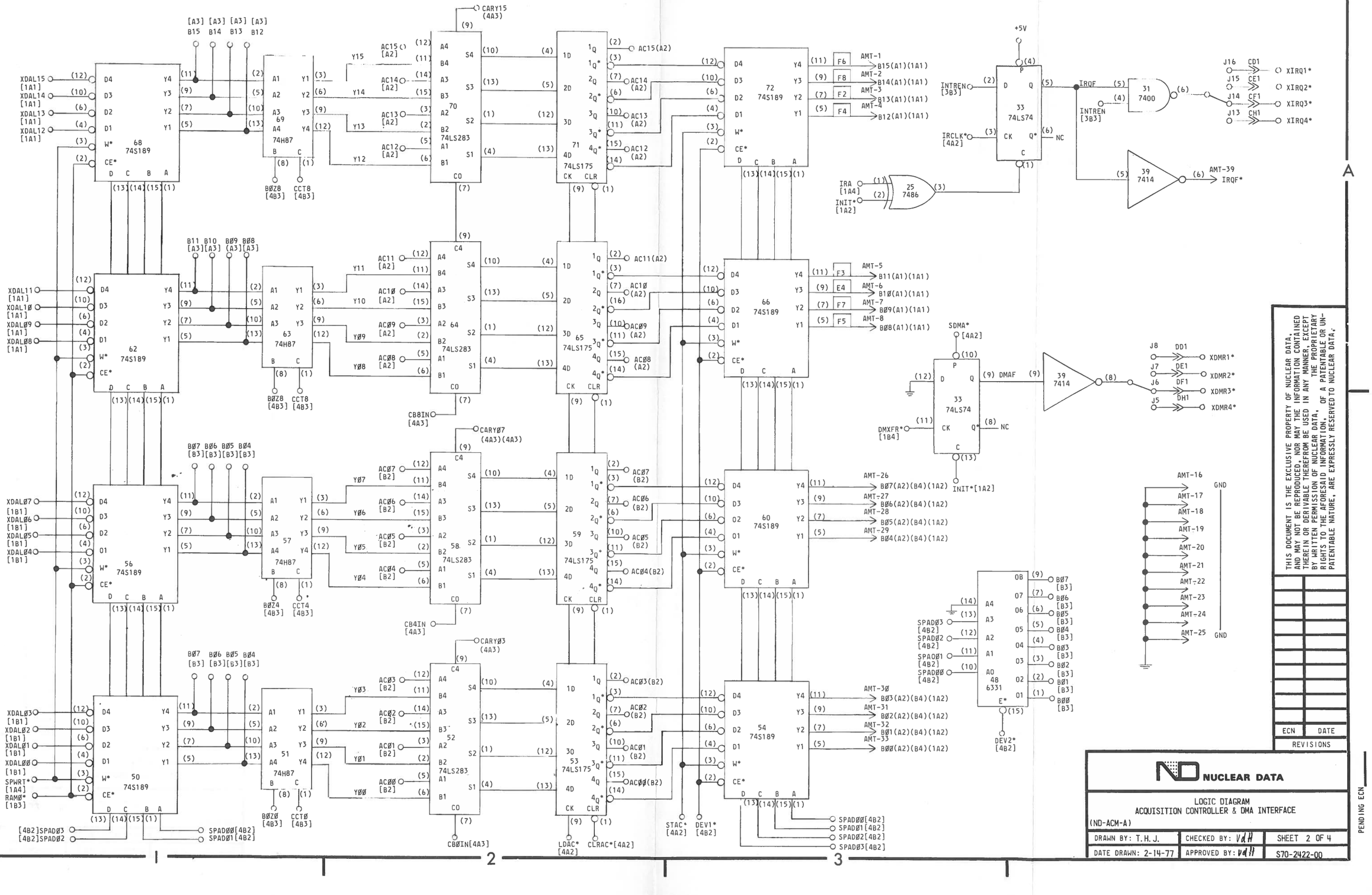

THIS DOCUMENT IS THE EXCLUSIVE PROPERTY OF NUCLEAR DATA, AND MAY NOT BE REPRODUCED, NOR MAY THE INFORMATION CONTAINED THEREIN OR DERIVABLE THEREFROM BE USED IN ANY MANNER EXCEPT BY WRITTEN PERMISSION OF NUCLEAR DATA, OF A PATENTABLE OR UNPATENTABLE NATURE, ARE EXPRESSLY RESERVED TO NUCLEAR DATA.

ECN	DATE
REVISIONS	

PENDING ECN

NUCLEAR DATA

LOGIC DIAGRAM
ACQUISITION CONTROLLER & DMA INTERFACE
(ND-ACM-A)

DRAWN BY: T.H.J.	CHECKED BY: VdH	SHEET 2 OF 4
DATE DRAWN: 2-14-77	APPROVED BY: VdH	S70-2422-00

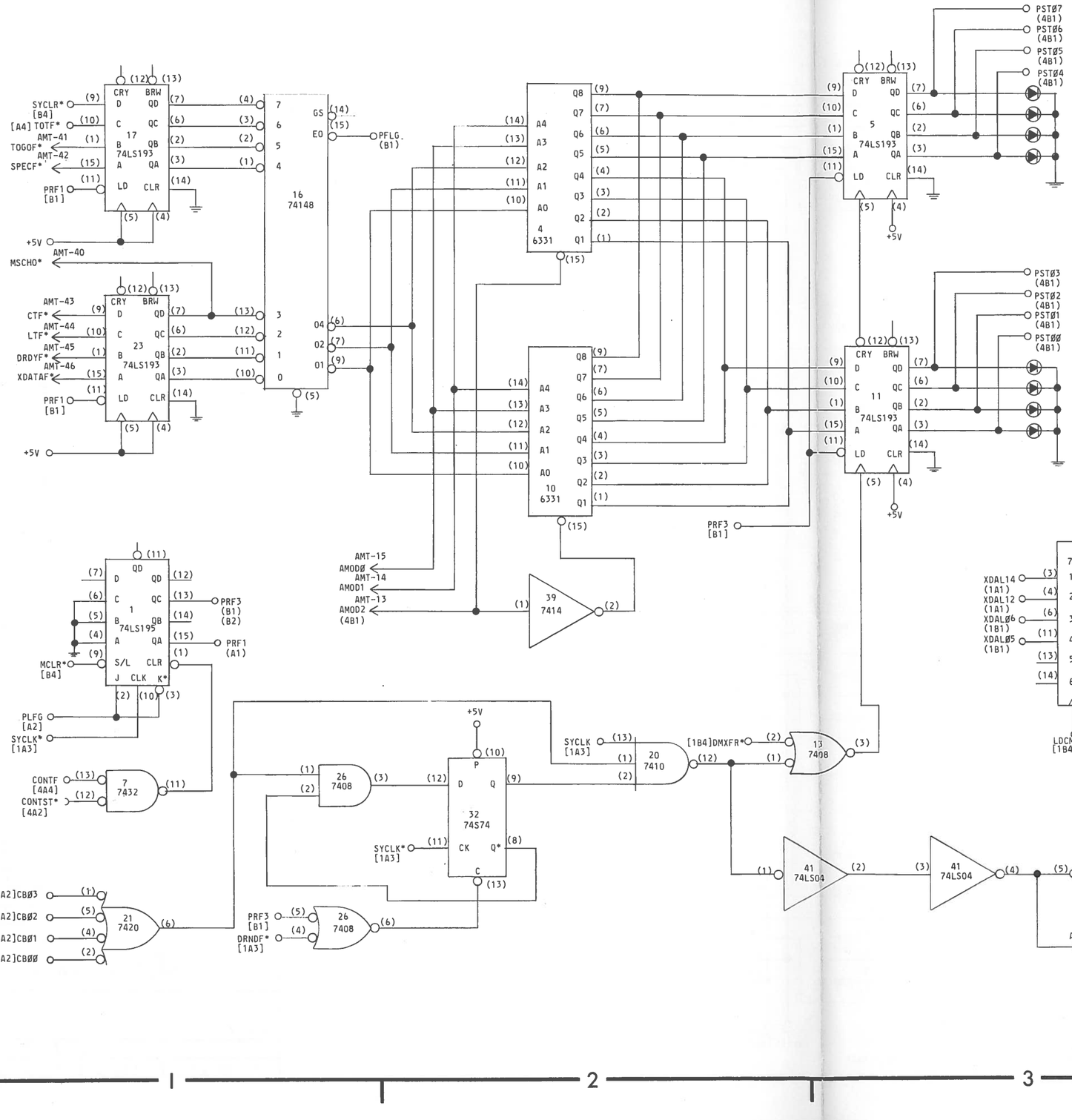

THIS DOCUMENT IS THE EXCLUSIVE PROPERTY OF NUCLEAR DATA,.:.
AND MAY NOT BE REPRODUCED, NOR MAY THE INFORMATION CONTAINED
THEREIN OR DERIVABLE THEREFROM BE USED IN ANY MANNER, EXCEPT
BY WRITTEN PERMISSION OF NUCLEAR DATA,.:. THE PROPRIETARY
RIGHTS TO THE AFORESAID INFORMATION, .:. OF A PATENTABLE OR UN-
PATENTABLE NATURE, ARE EXPRESSLY RESERVED TO NUCLEAR DATA,

ECN	DATE
REVISIONS	

PENDING ECN

NUCLEAR DATA

LOGIC DIAGRAM
ACQUISITION CONTROLLER & DMA INTERFACE
(ND-ACM-A)

DRAWN BY: T.H.J.	CHECKED BY: WH	SHEET 3 OF 4
DATE DRAWN: 2-15-77	APPROVED BY: WH	S70-2422-00

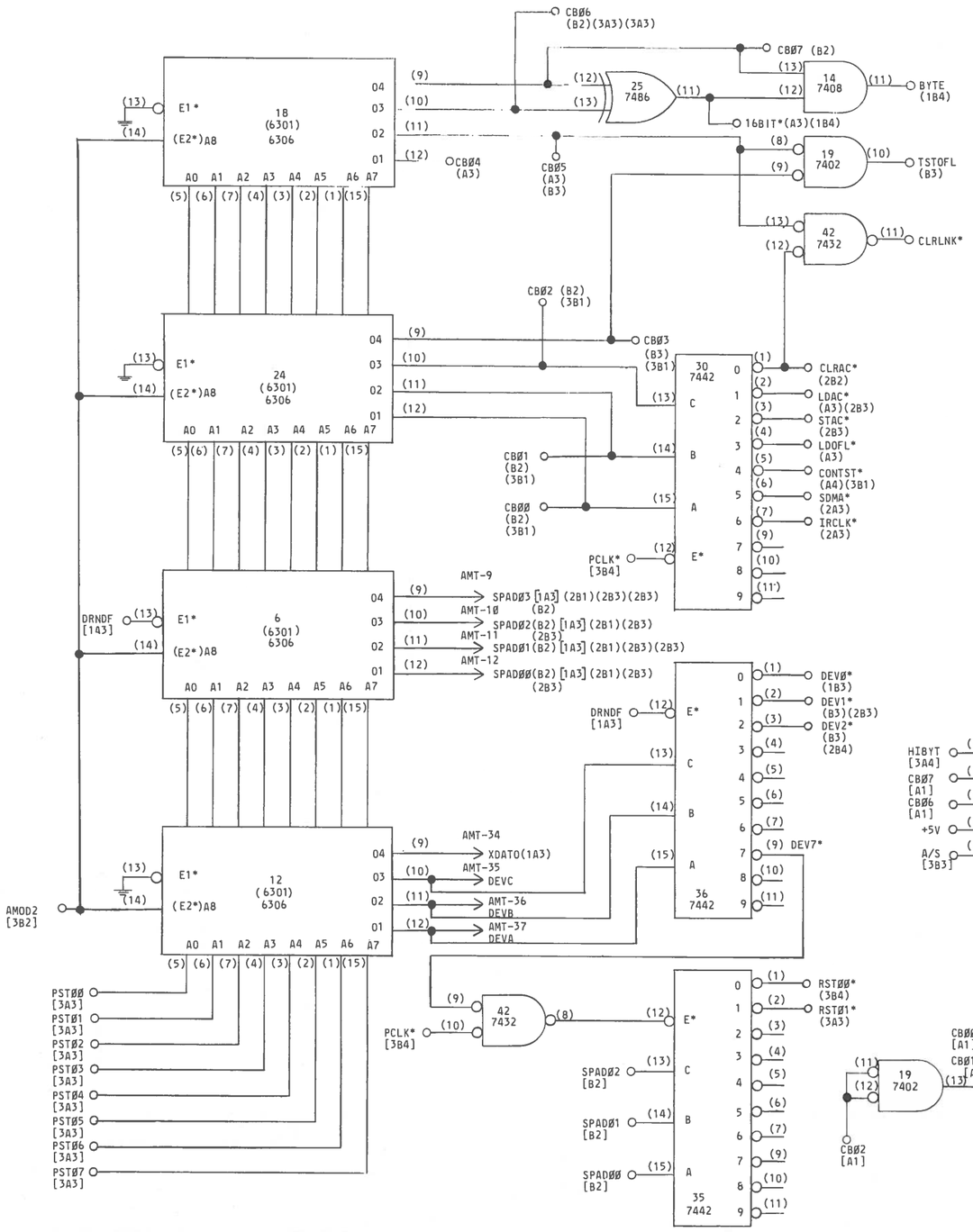

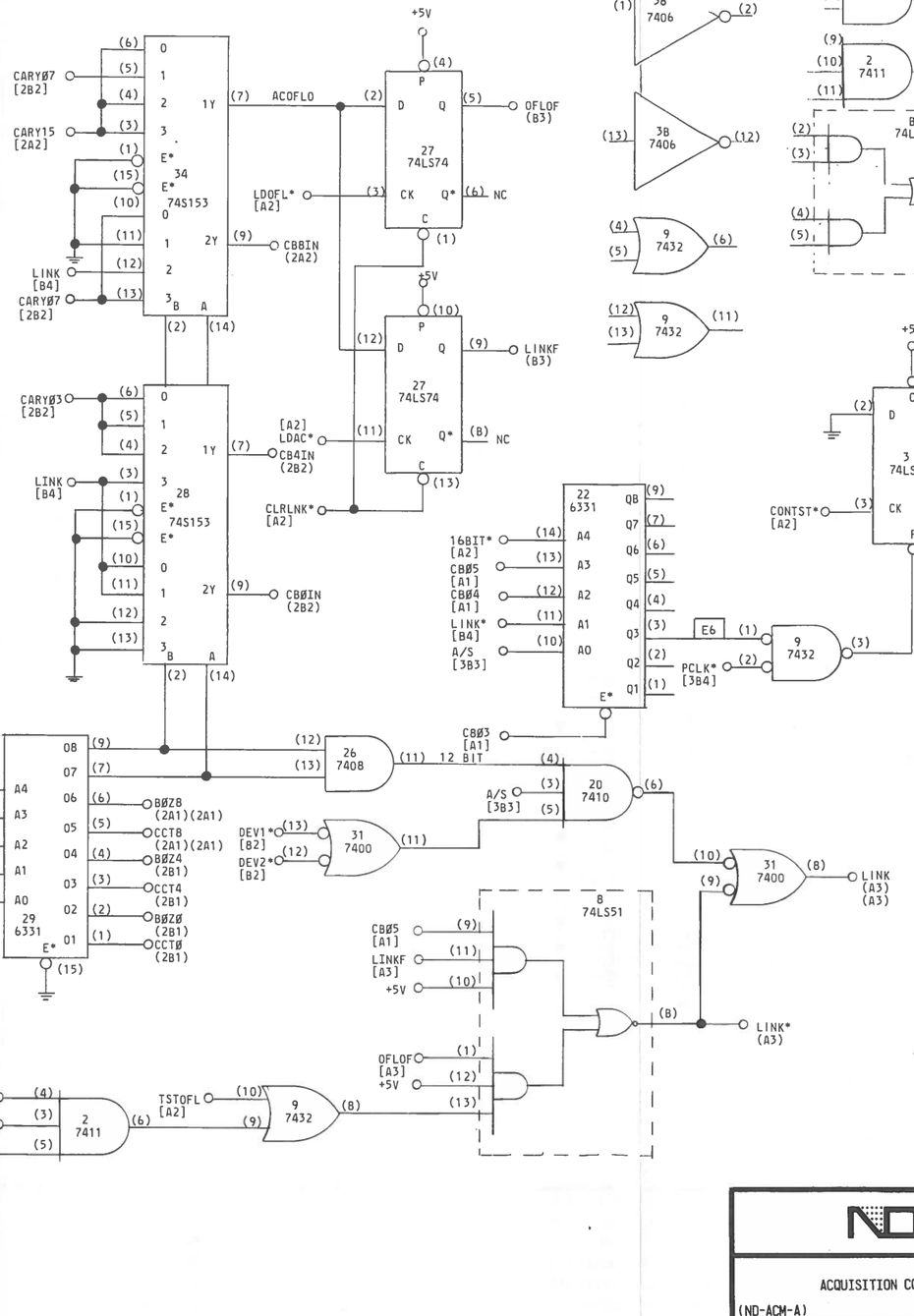

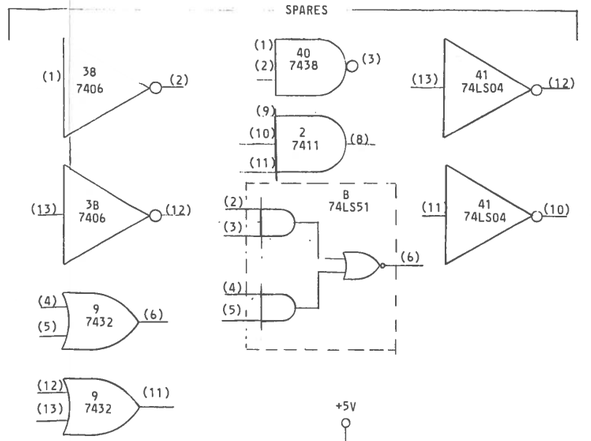

THIS DOCUMENT IS THE EXCLUSIVE PROPERTY OF NUCLEAR DATA, AND MAY NOT BE REPRODUCED, NOR MAY THE INFORMATION CONTAINED THEREIN OR DERIVABLE THEREFROM BE USED IN ANY MANNER, EXCEPT BY WRITTEN PERMISSION OF NUCLEAR DATA. THE PROPRIETARY RIGHTS TO THE AFORESAID INFORMATION, OF A PATENTABLE OR UNPATENTABLE NATURE, ARE EXPRESSLY RESERVED TO NUCLEAR DATA.

ECN	DATE

REVISIONS

PENDING ECN

NUCLEAR DATA

LOGIC DIAGRAM
ACQUISITION CONTROLLER & DMA INTERFACE

(ND-ACM-A)

DRAWN BY: T.H.J.	CHECKED BY: vdH	SHEET 4 OF 4
DATE DRAWN: 2-14-77	APPROVED BY: vdH	S70-2422-00

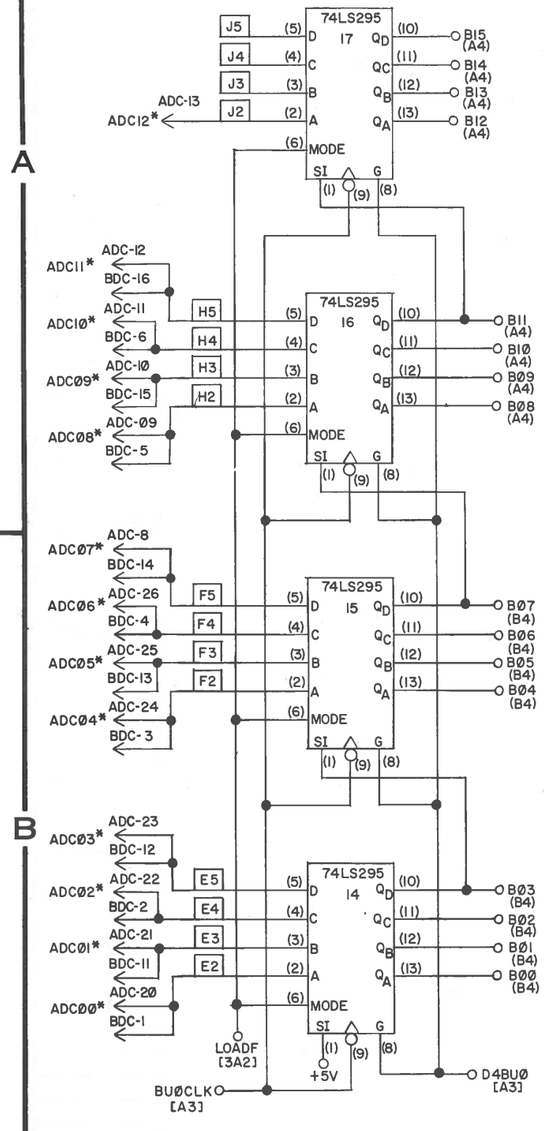

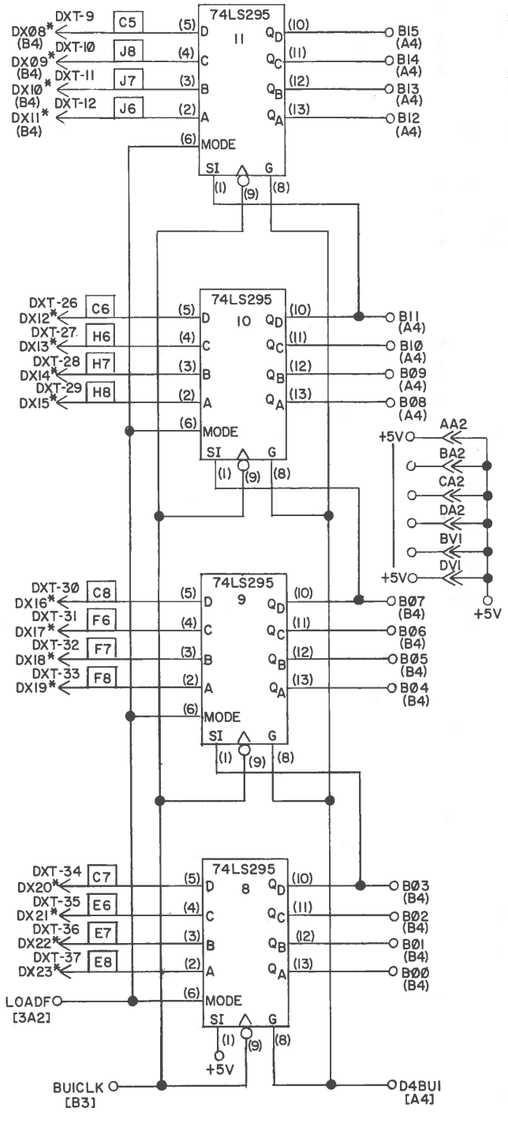

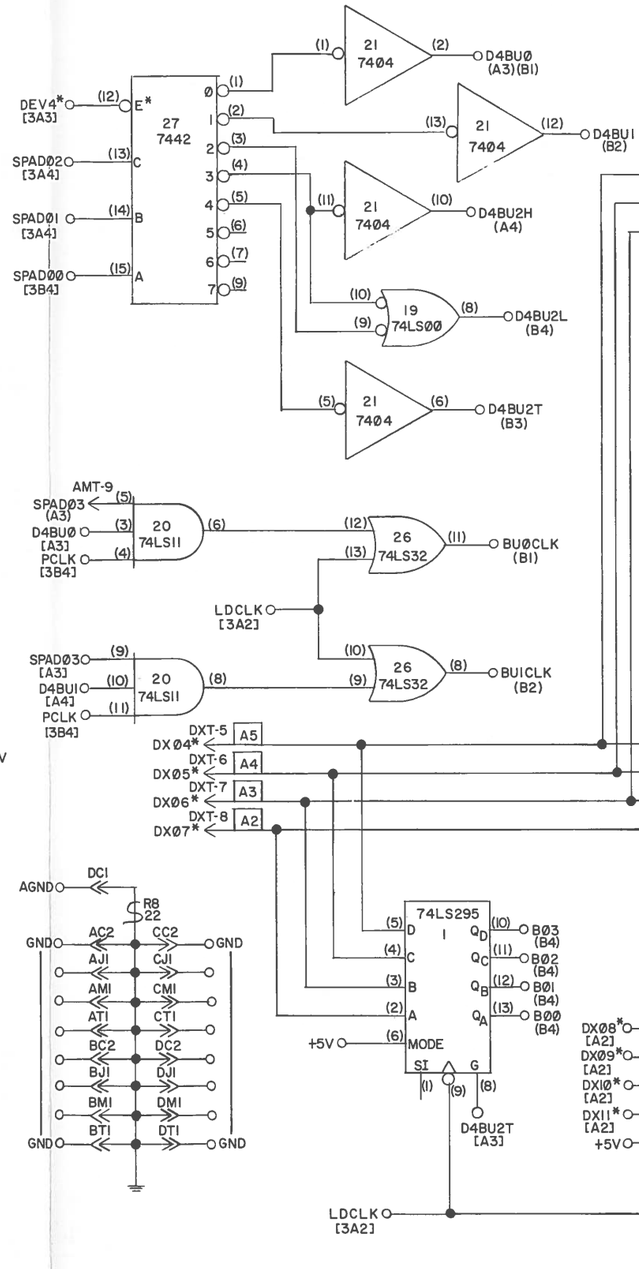

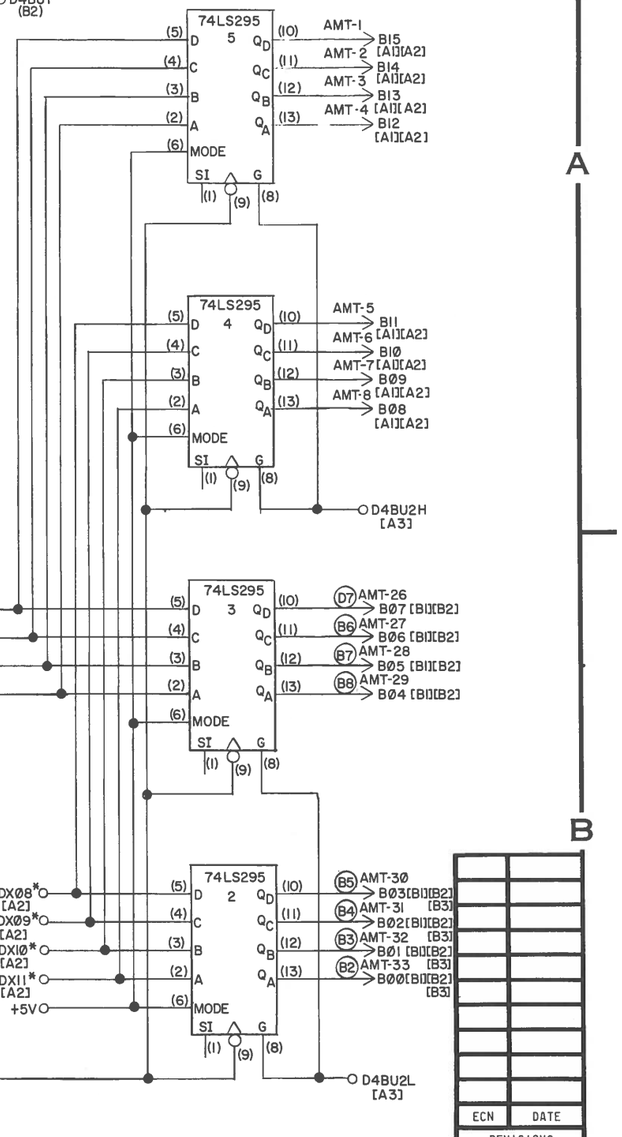

ECN	DATE
REVISIONS	

NOTES:

1 - ALL DIODES ARE G964 OR EQUIVALENT, EXCEPT AS NOTED.

2 - ALL RESISTORS ARE 1/4W, ±5%, EXCEPT AS NOTED.

3 - ALL CAPACITORS ARE pf, EXCEPT AS NOTED.

4 - I.C. VOLTAGES, EXCEPT AS NOTED:
- 14 PIN DIP, PIN (7) GND: PIN (14) +5V
- 16 PIN DIP, PIN (8) GND: PIN (16) +5V
- 24 PIN DIP, PIN (12) GND: PIN (24) +5V

5 - THE FOLLOWING SYMBOLS/NOTATIONS ARE USED ON THE DIAGRAM AND/OR PRINTED CIRCUIT BOARD ASSEMBLY.

IC - INTEGRATED CIRCUIT
Q - TRANSISTOR
( ) - IC PIN DESIGNATION
- CONNECTOR DESIGNATION
NC - NO CONNECTION
SAT - SELECT AT TEST
(P1) - PRECISION RESISTORS 100PPM 1/8W, ±1% METAL FILM
- DC COMMON
FB - FERRITE BEAD
A5 RESISTOR PACK 2.2K TO +5V
- GERMANIUM DIODE
- SILICON DIODE
- ZENER DIODE
- TUNNEL DIODE
- SELENIUM DIODE
B5 RESISTOR PACK 680 TO +5V

ADC* — SIGNAL NAME
[A2] — SIGNAL SOURCE DRAWING LOCATION, OR
(A2) — SIGNAL LOAD DRAWING LOCATION
ZONE LOCATION
SHEET NUMBER

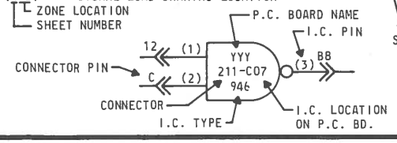

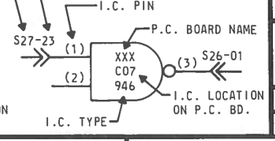

NUCLEAR DATA

LOGIC DIAGRAM
INTERFACE TO ACQUISITION MODULES
(ND-ACT)

DRAWN BY: T.H.J.	CHECKED BY: VdH	SHEET 1 OF 3
DATE DRAWN: 2-25-77	APPROVED BY: VdH	S70-2458-00

PENDING ECN

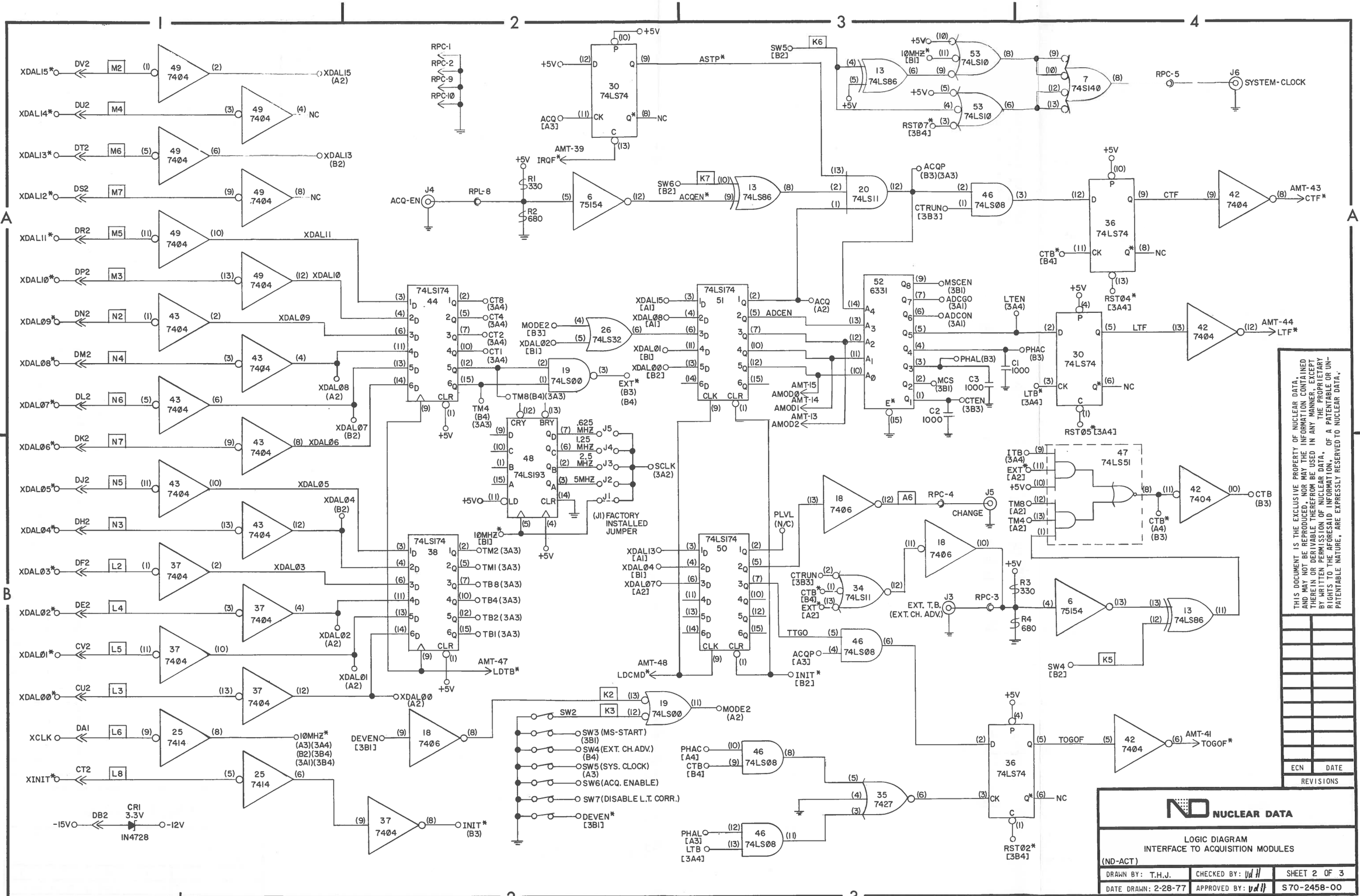

THIS DOCUMENT IS THE EXCLUSIVE PROPERTY OF NUCLEAR DATA, AND MAY NOT BE REPRODUCED, NOR MAY THE INFORMATION CONTAINED THEREIN OR DERIVABLE THEREFROM BE USED IN ANY MANNER, EXCEPT BY WRITTEN PERMISSION OF NUCLEAR DATA. THE PROPRIETARY RIGHTS TO THE AFORESAID INFORMATION, OF A PATENTABLE OR UNPATENTABLE NATURE, ARE EXPRESSLY RESERVED TO NUCLEAR DATA.

ECN	DATE
REVISIONS	

NUCLEAR DATA

LOGIC DIAGRAM
INTERFACE TO ACQUISITION MODULES
(ND-ACT)

DRAWN BY: T.H.J.	CHECKED BY: vdH	SHEET 2 OF 3
DATE DRAWN: 2-28-77	APPROVED BY: vdH	S70-2458-00

PENDING ECN

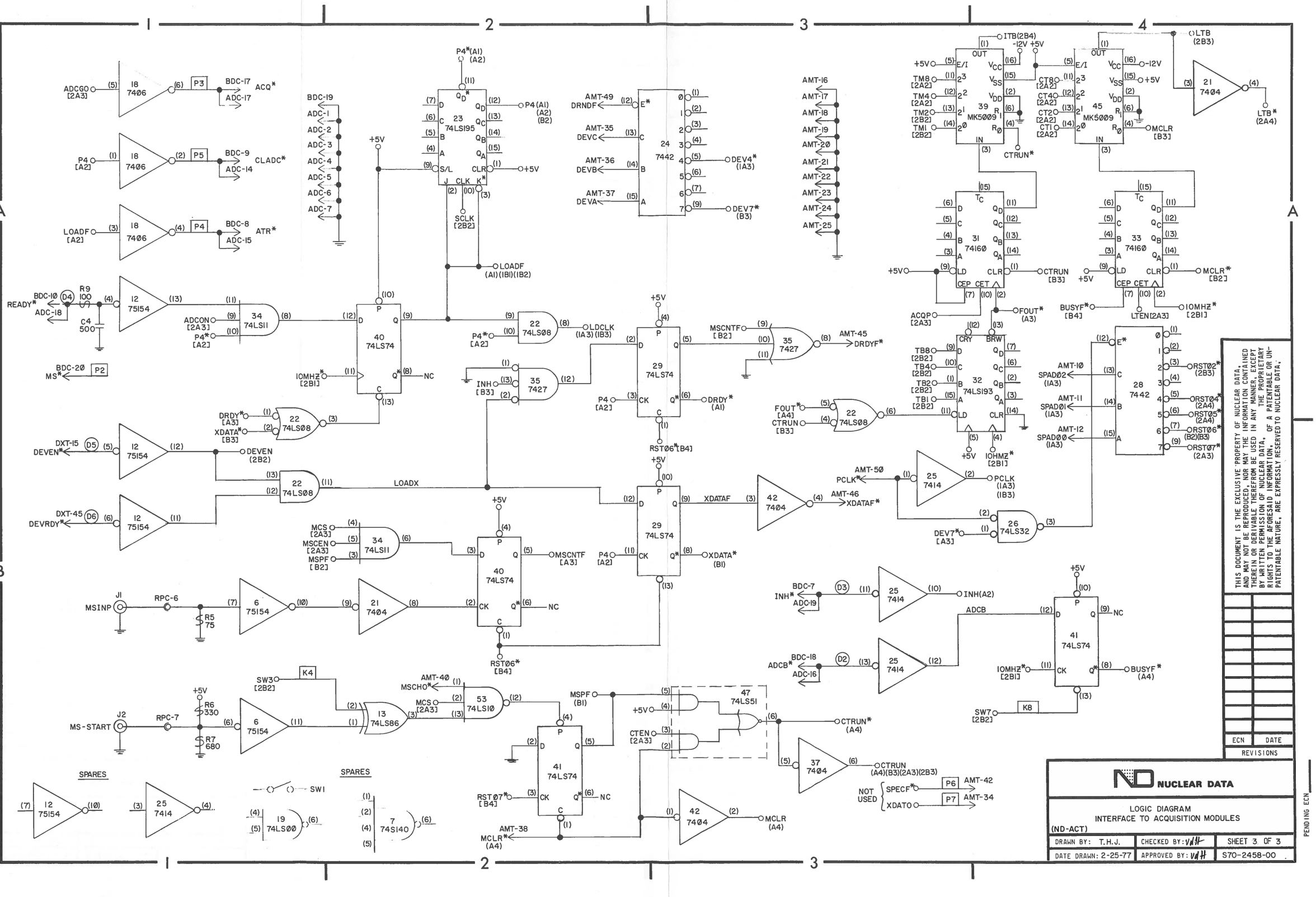

THIS DOCUMENT IS THE EXCLUSIVE PROPERTY OF NUCLEAR DATA, AND MAY NOT BE REPRODUCED, NOR MAY THE INFORMATION CONTAINED THEREIN OR DERIVABLE THEREFROM BE USED IN ANY MANNER, EXCEPT BY WRITTEN PERMISSION OF NUCLEAR DATA. THE PROPRIETARY RIGHTS TO THE AFORESAID INFORMATION, OF A PATENTABLE OR UNPATENTABLE NATURE, ARE EXPRESSLY RESERVED TO NUCLEAR DATA.

ECN	DATE
REVISIONS	

NUCLEAR DATA

LOGIC DIAGRAM
INTERFACE TO ACQUISITION MODULES
(ND-ACT)

DRAWN BY: T.H.J.	CHECKED BY: VdH	SHEET 3 OF 3
DATE DRAWN: 2-25-77	APPROVED BY: VdH	S70-2458-00

PENDING ECN

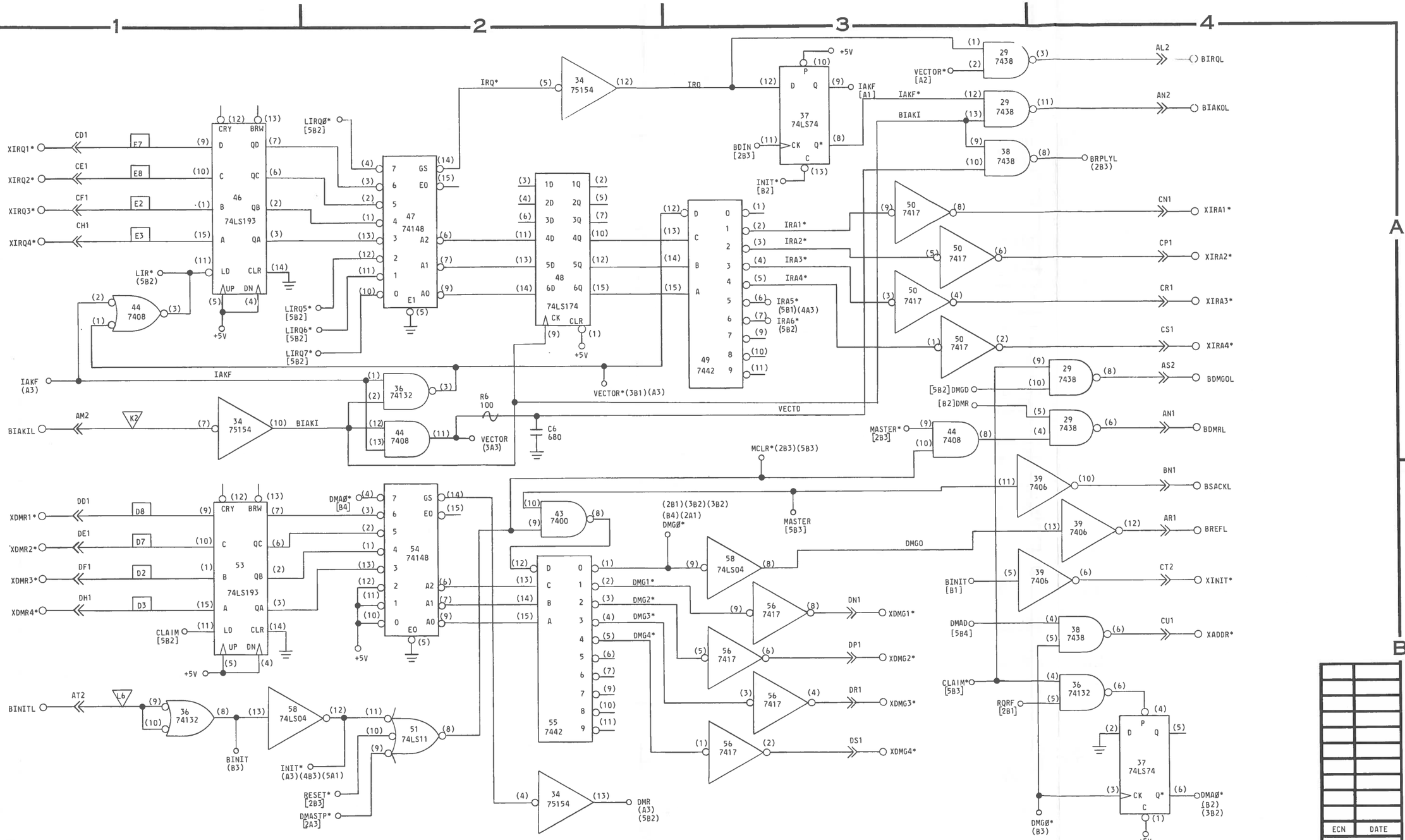

NOTES:

1 - ALL DIODES ARE G964 OR EQUIVALENT, EXCEPT AS NOTED.
2 - ALL RESISTORS ARE 1/4W, ±5%, EXCEPT AS NOTED.
3 - ALL CAPACITORS ARE pf, EXCEPT AS NOTED.
4 - I.C. VOLTAGES, EXCEPT AS NOTED:
14 PIN DIP, PIN (7) GND: PIN (14) +5V
16 PIN DIP, PIN (8) GND: PIN (16) +5V
24 PIN DIP, PIN (12) GND: PIN (24) +5V

5 - THE FOLLOWING SYMBOLS/NOTATIONS ARE USED ON THE DIAGRAM AND/OR PRINTED CIRCUIT BOARD ASSEMBLY.

IC - INTEGRATED CIRCUIT
Q - TRANSISTOR
( ) - IC PIN OESIGNATION
- CONNECTOR DESIGNATION
NC - NO CONNECTION
A5 RESISTOR PACK 680Ω TO +5V
SAT - SELECT AT TEST
(P1) - PRECISION RESISTORS 100PPM 1/8W, ±1% METAL FILM
- DC COMMON
FB - FERRITE BEAD
A1 RESISTOR PACK 180Ω TO +5V 390 TO GND
- GERMANIUM DIODE
- SILICON DIODE
- ZENER DIODE
- TUNNEL DIODE
- SELENIUM DIODE

ADC* — SIGNAL NAME
[4A2] — SIGNAL SOURCE DRAWING LOCATION, OR
(4A2) — SIGNAL LOAD DRAWING LOCATION
ZONE LOCATION
SHEET NUMBER

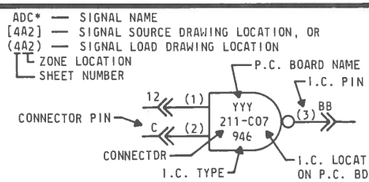

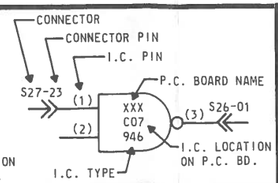

NUCLEAR DATA

LOGIC DIAGRAM
DMA CONTROLLER & KEYBOARD INTERFACE
(ND-DMA-A)

DRAWN BY: R.F.Y.	CHECKED BY:	SHEET 1 OF 5
DATE DRAWN: 3-10-77	APPROVED BY:	S70-2420-01

PENDING ECN

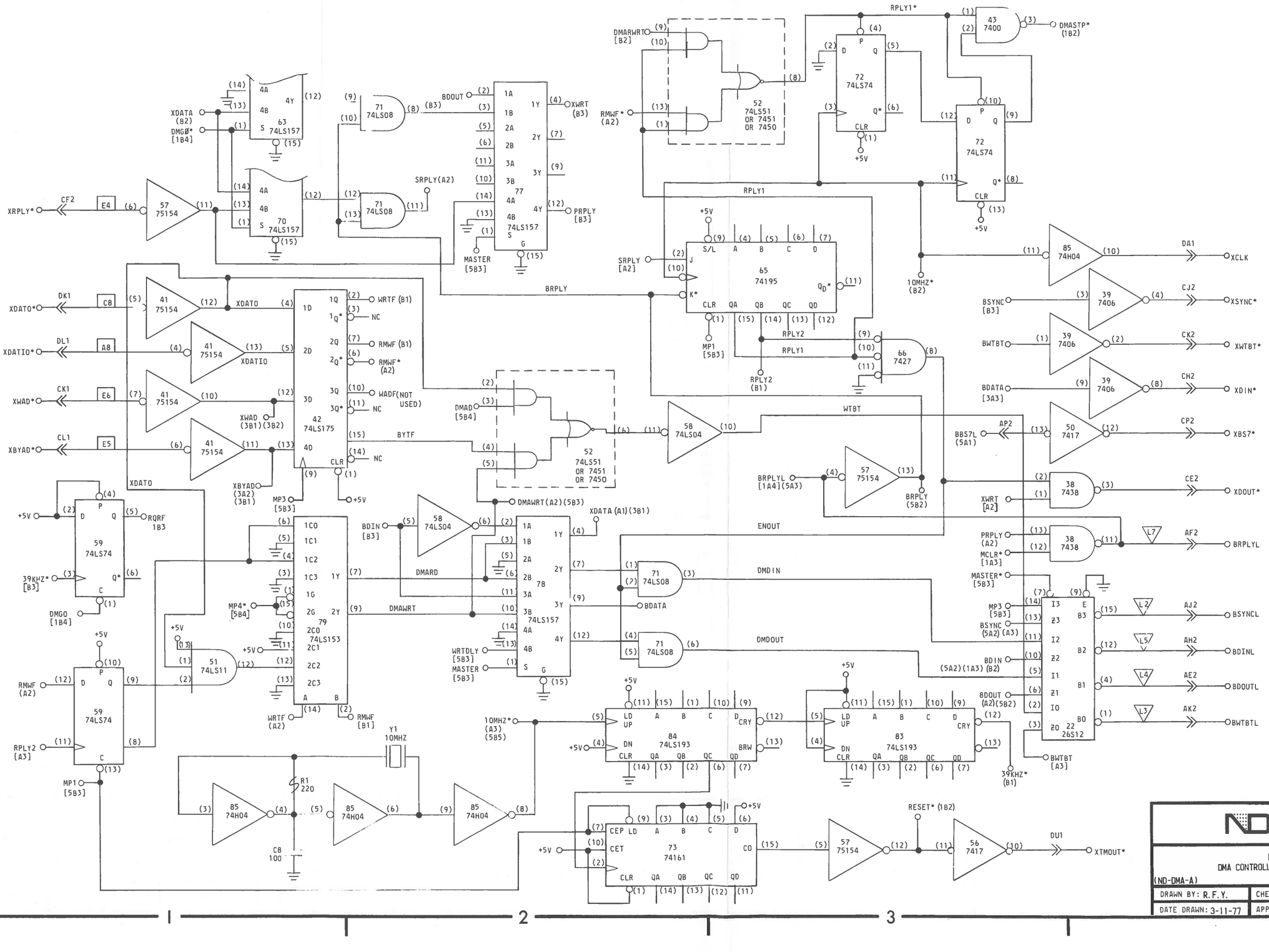

THIS DOCUMENT IS THE EXCLUSIVE PROPERTY OF NUCLEAR DATA, AND MAY NOT BE REPRODUCED, NOR MAY THE INFORMATION CONTAINED THEREIN OR DERIVABLE THEREFROM BE USED IN ANY MANNER, EXCEPT BY WRITTEN PERMISSION OF NUCLEAR DATA, OF A PATENTABLE OR UNPATENTABLE NATURE, ARE EXPRESSLY RESERVED TO NUCLEAR DATA.

ECN	DATE

REVISIONS

PENDING ECN

NUCLEAR DATA

LOGIC DIAGRAM
DMA CONTROLLER & KEYBOARD INTERFACE
(ND-DMA-A)

DRAWN BY: R.F.Y.	CHECKED BY:	SHEET 2 OF 5
DATE DRAWN: 3-11-77	APPROVED BY:	S70-2420-01

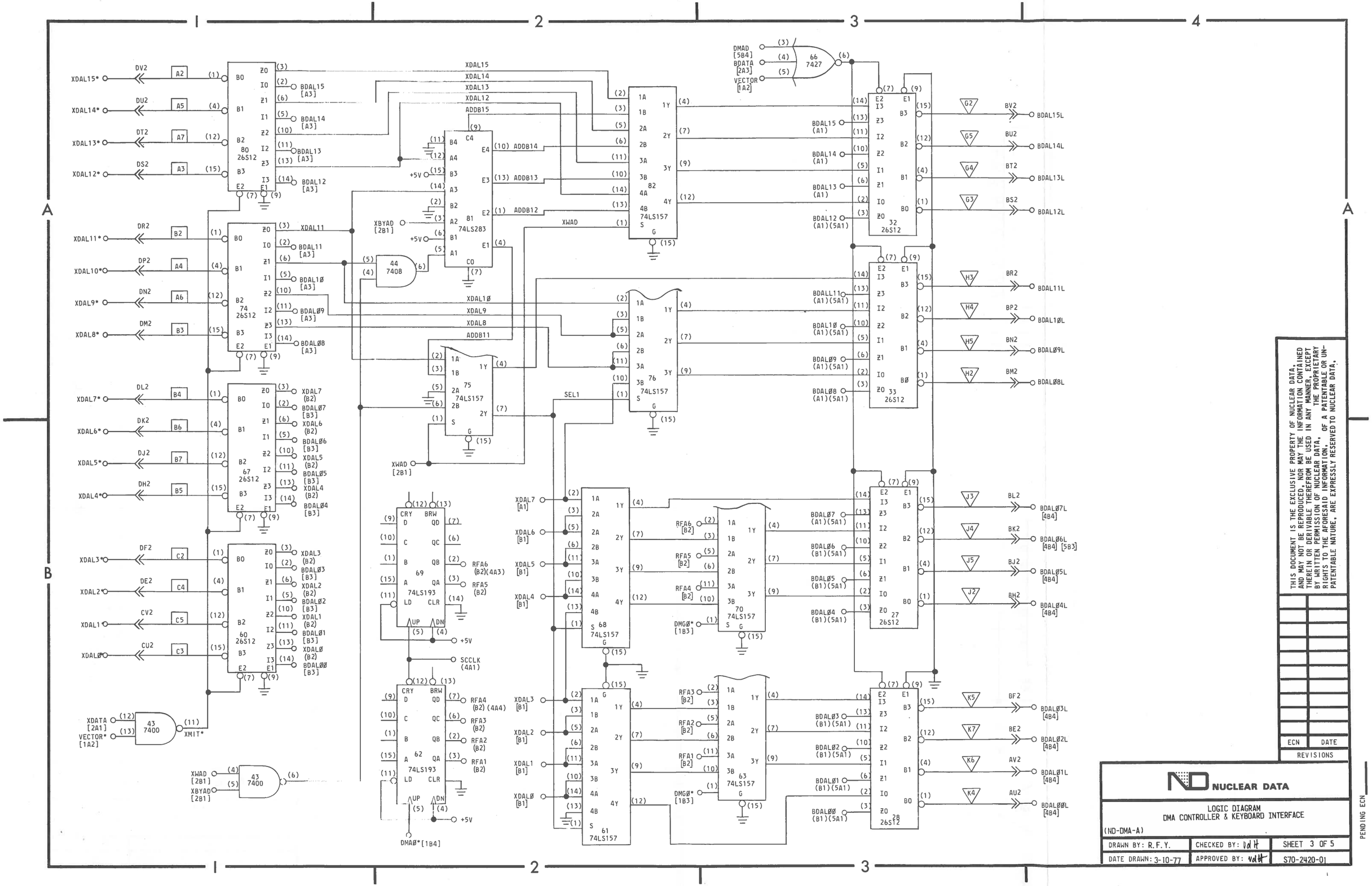

THIS DOCUMENT IS THE EXCLUSIVE PROPERTY OF NUCLEAR DATA, AND MAY NOT BE REPRODUCED, NOR MAY THE INFORMATION CONTAINED THEREIN OR DERIVABLE THEREFROM BE USED IN ANY MANNER, EXCEPT BY WRITTEN PERMISSION OF NUCLEAR DATA. THE PROPRIETARY RIGHTS TO THE AFORESAID INFORMATION, OF A PATENTABLE OR UNPATENTABLE NATURE, ARE EXPRESSLY RESERVED TO NUCLEAR DATA.

ECN	DATE
REVISIONS	

NUCLEAR DATA

LOGIC DIAGRAM
DMA CONTROLLER & KEYBOARD INTERFACE

(ND-DMA-A)

DRAWN BY: R.F.Y.	CHECKED BY: DdH	SHEET 3 OF 5
DATE DRAWN: 3-10-77	APPROVED BY: vdH	S70-2420-01

PENDING ECN

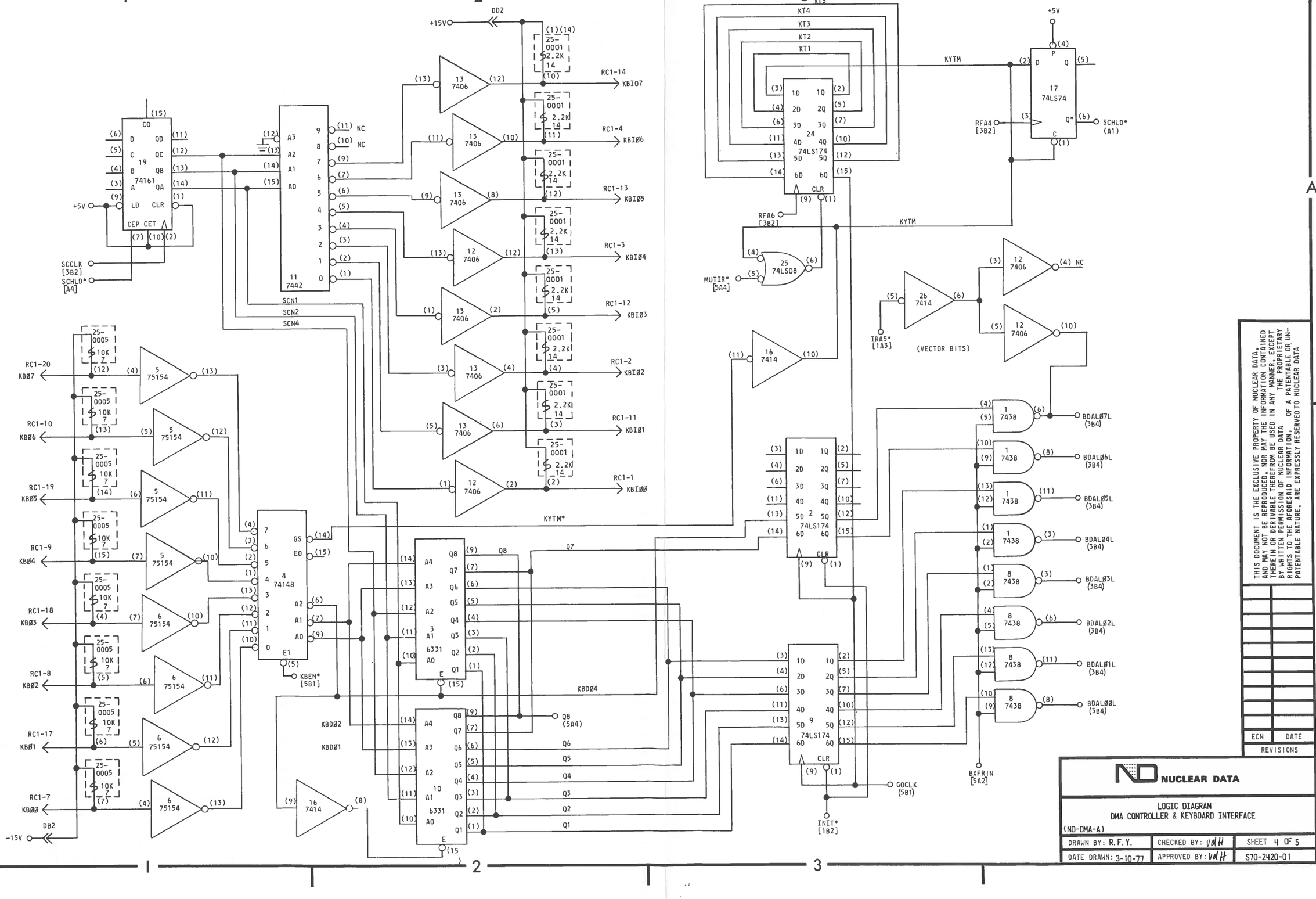

THIS DOCUMENT IS THE EXCLUSIVE PROPERTY OF NUCLEAR DATA, AND MAY NOT BE REPRODUCED, NOR MAY THE INFORMATION CONTAINED THEREIN OR DERIVABLE THEREFROM BE USED IN ANY MANNER, EXCEPT BY WRITTEN PERMISSION OF NUCLEAR DATA THE PROPRIETARY RIGHTS TO THE AFORESAID INFORMATION, OF A PATENTABLE OR UNPATENTABLE NATURE, ARE EXPRESSLY RESERVED TO NUCLEAR DATA

ECN	DATE
REVISIONS	

PENDING ECN

NUCLEAR DATA

LOGIC DIAGRAM
DMA CONTROLLER & KEYBOARD INTERFACE
(ND-DMA-A)

DRAWN BY: R.F.Y.	CHECKED BY: vdH	SHEET 4 OF 5
DATE DRAWN: 3-10-77	APPROVED BY: vdH	S70-2420-01

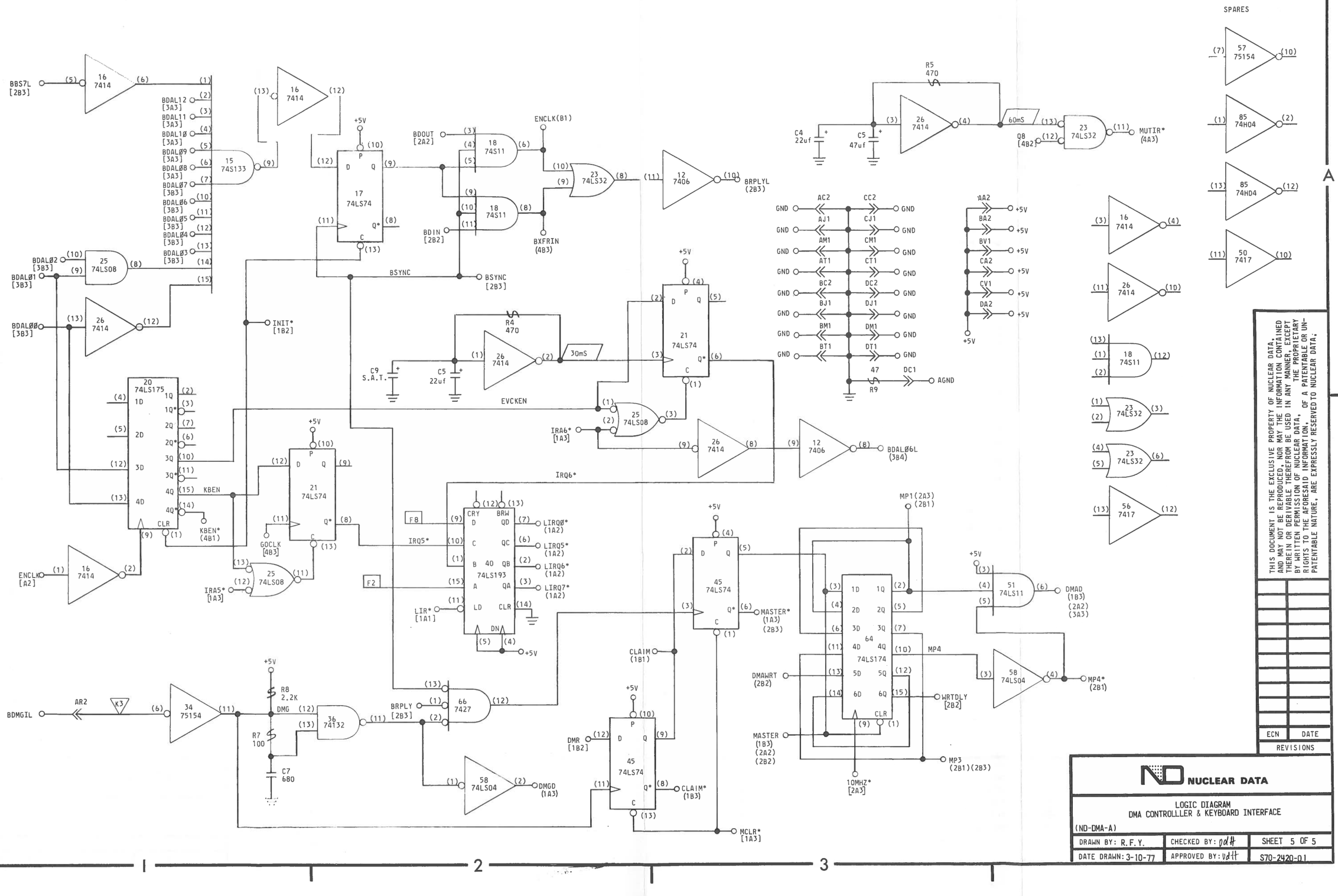

THIS DOCUMENT IS THE EXCLUSIVE PROPERTY OF NUCLEAR DATA, AND MAY NOT BE REPRODUCED, NOR MAY THE INFORMATION CONTAINED THEREIN OR DERIVABLE THEREFROM BE USED IN ANY MANNER, EXCEPT BY WRITTEN PERMISSION OF NUCLEAR DATA. OF A PATENTABLE OR UNPATENTABLE NATURE, ARE EXPRESSLY RESERVED TO NUCLEAR DATA.

ECN	DATE
REVISIONS	

NUCLEAR DATA

LOGIC DIAGRAM
DMA CONTROLLLER & KEYBOARD INTERFACE
(ND-DMA-A)

DRAWN BY: R.F.Y.	CHECKED BY: gdh	SHEET 5 OF 5
DATE DRAWN: 3-10-77	APPROVED BY: gdh	S70-2420-01

PENDING ECN

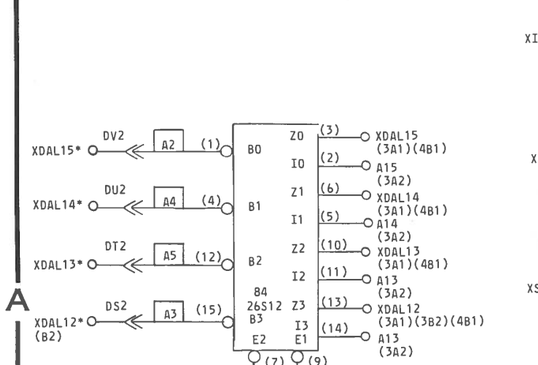

ECN	DATE
REVISIONS	

NOTES:

1 - ALL DIODES ARE G964 OR EQUIVALENT, EXCEPT AS NOTED.

2 - ALL RESISTORS ARE 1/4W, ±5%, EXCEPT AS NOTED.

3 - ALL CAPACITORS ARE pf, EXCEPT AS NOTED.

4 - I.C. VOLTAGES, EXCEPT AS NOTED:
14 PIN DIP, PIN (7) GND: PIN (14) +5V
16 PIN DIP, PIN (8) GND: PIN (16) +5V
24 PIN DIP, PIN (12) GND: PIN (24) +5V

5 - THE FOLLOWING SYMBOLS/NOTATIONS ARE USED ON THE DIAGRAM AND/OR PRINTED CIRCUIT BOARD ASSEMBLY.

IC - INTEGRATED CIRCUIT
Q - TRANSISTOR
( ) - IC PIN DESIGNATION
- CONNECTOR DESIGNATION
NC - NO CONNECTION
SAT - SELECT AT TEST
(P1) - PRECISION RESISTORS 100PPM 1/8W, ±1% METAL FILM
- DC COMMON
FB - FERRITE BEAD
A2 RESISTOR PACK 2.2K TO +5V
- GERMANIUM DIODE
- SILICON DIODE
- ZENER DIODE
- TUNNEL DIODE
- SELENIUM DIODE

ADC* — SIGNAL NAME
[4A2] — SIGNAL SOURCE DRAWING LOCATION, OR
(4A2) — SIGNAL LOAD DRAWING LOCATION
ZONE LOCATION
SHEET NUMBER

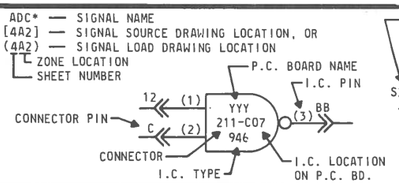

NUCLEAR DATA

LOGIC DIAGRAM
DISPLAY INTERFACE ASSEMBLY
(ND-DMB-A)

DRAWN BY: T. H. J.	CHECKED BY: VdH	SHEET 1 OF 5
DATE DRAWN: 2-17-77	APPROVED BY: VdH	S70-2413-01

PENDING ECN

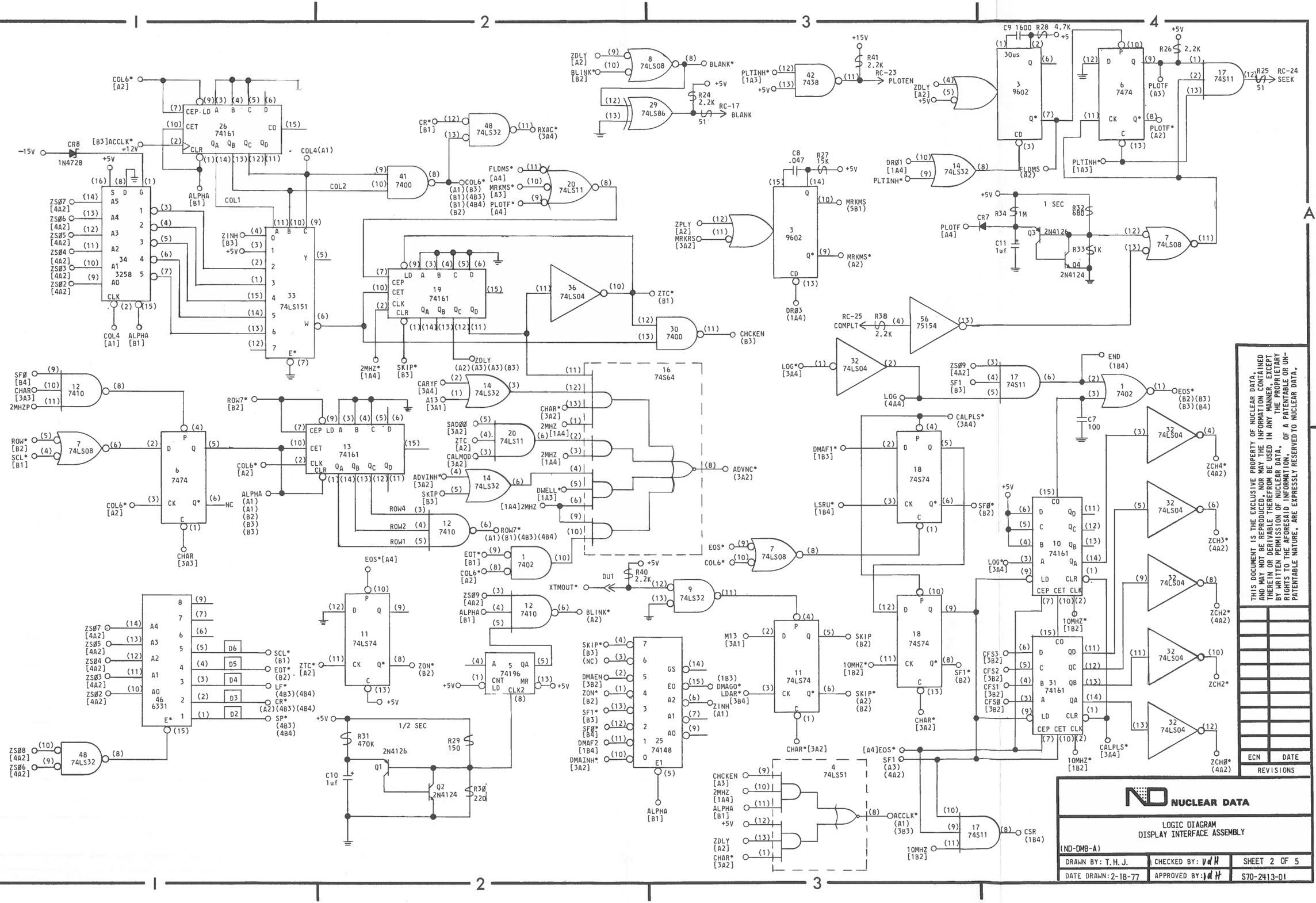

THIS DOCUMENT IS THE EXCLUSIVE PROPERTY OF NUCLEAR DATA, AND MAY NOT BE REPRODUCED, NOR MAY THE INFORMATION CONTAINED THEREIN OR DERIVABLE THEREFROM BE USED IN ANY MANNER, EXCEPT BY WRITTEN PERMISSION OF NUCLEAR DATA. THE PROPRIETARY RIGHTS TO THE AFORESAID INFORMATION, OF A PATENTABLE OR UNPATENTABLE NATURE, ARE EXPRESSLY RESERVED TO NUCLEAR DATA.

ECN	DATE
REVISIONS	

NUCLEAR DATA

LOGIC DIAGRAM
DISPLAY INTERFACE ASSEMBLY

(ND-DMB-A)

DRAWN BY: T.H.J.	CHECKED BY: VdH	SHEET 2 OF 5
DATE DRAWN: 2-18-77	APPROVED BY: VdH	S70-2413-01

PENDING ECN

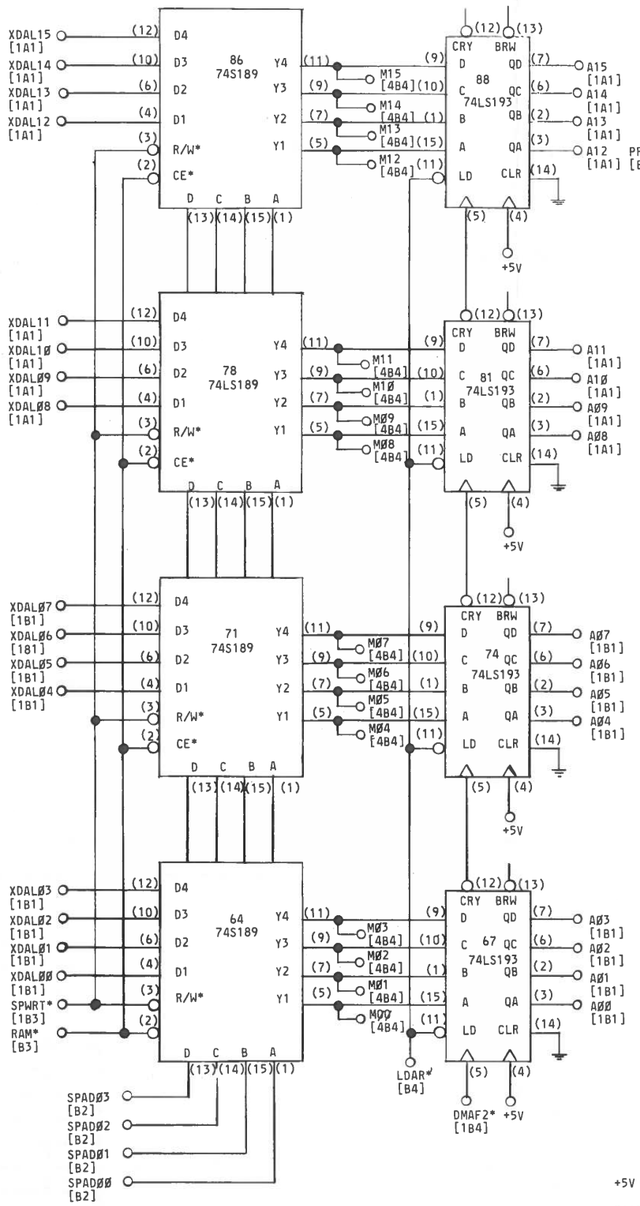

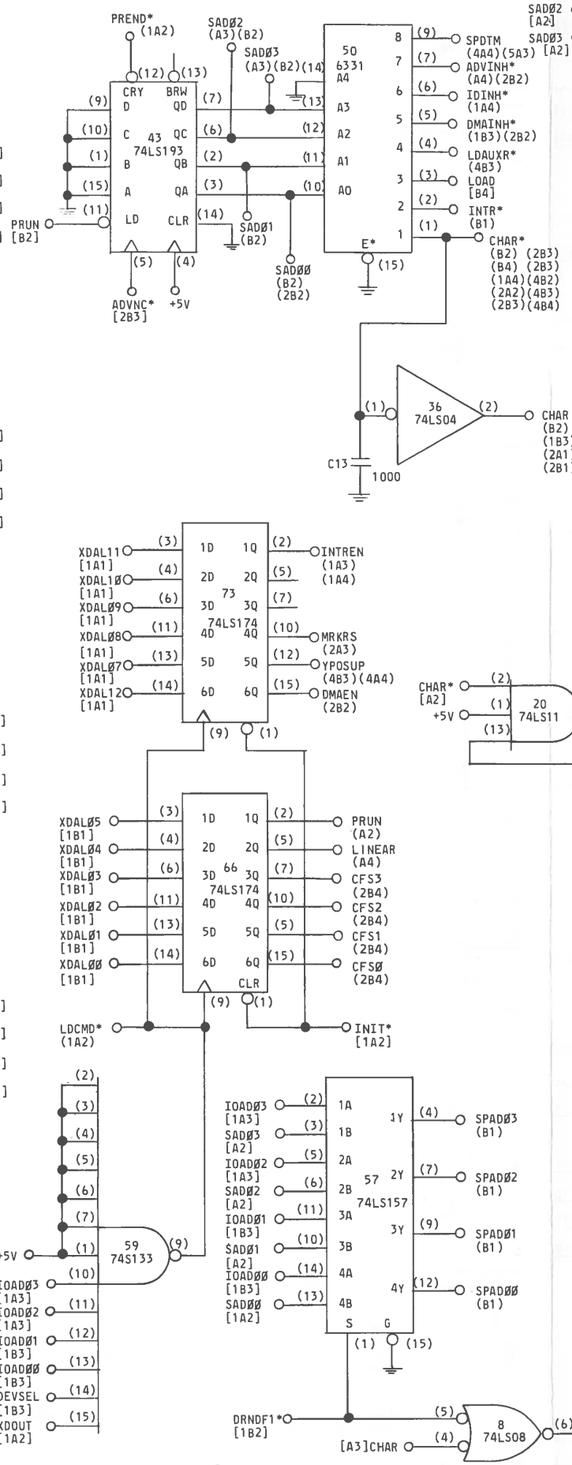

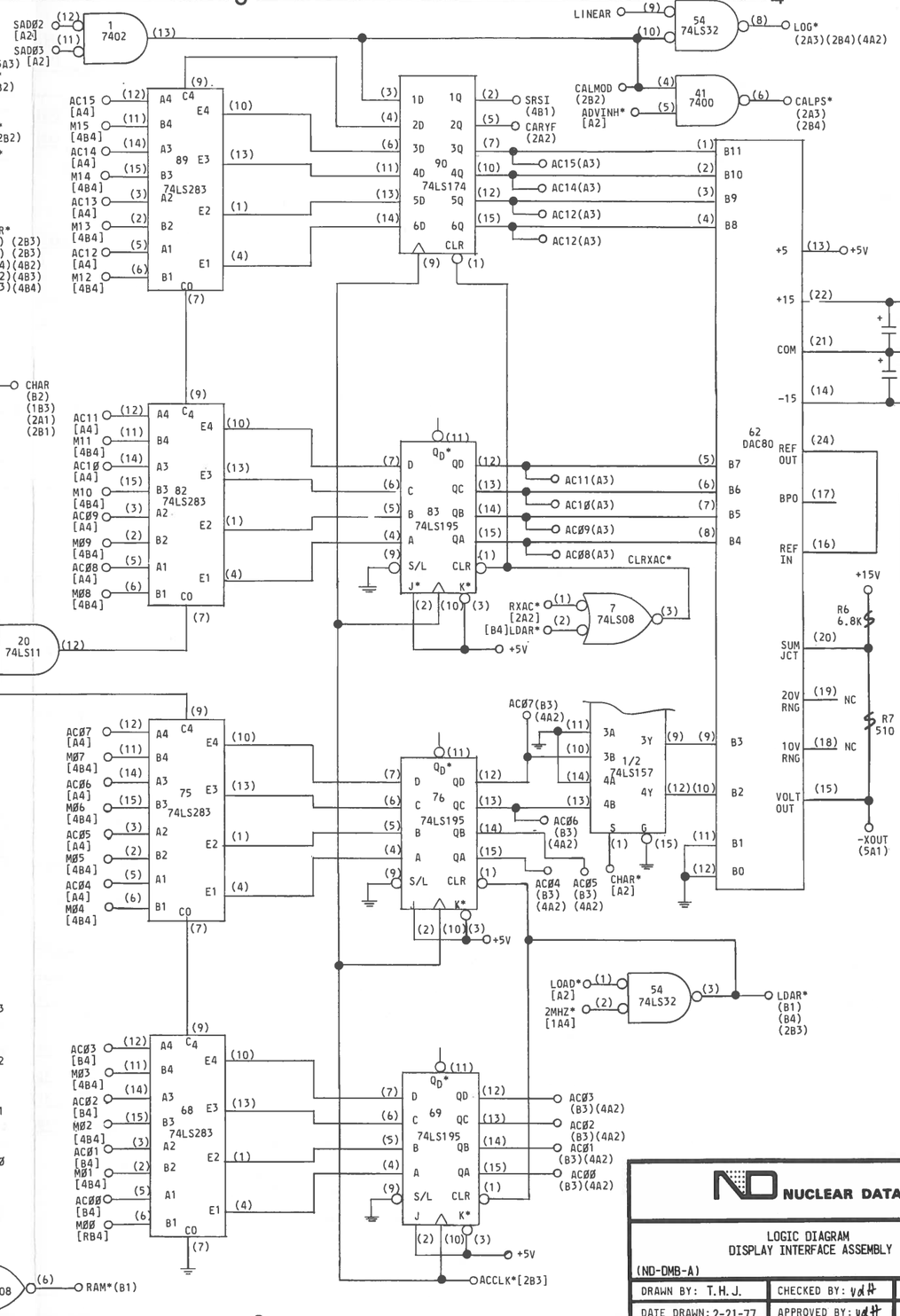

THIS DOCUMENT IS THE EXCLUSIVE PROPERTY OF NUCLEAR DATA, AND MAY NOT BE REPRODUCED, NOR MAY THE INFORMATION CONTAINED THEREIN OR DERIVABLE THEREFROM BE USED IN ANY MANNER EXCEPT BY WRITTEN PERMISSION OF NUCLEAR DATA. ALL RIGHTS TO THE AFORESAID INFORMATION, OF A PATENTABLE OR UNPATENTABLE NATURE, ARE EXPRESSLY RESERVED TO NUCLEAR DATA.

ECN	DATE
REVISIONS	

NUCLEAR DATA

LOGIC DIAGRAM
DISPLAY INTERFACE ASSEMBLY
(ND-DMB-A)

DRAWN BY: T.H.J.	CHECKED BY: vdH	SHEET 3 OF 5
DATE DRAWN: 2-21-77	APPROVED BY: vdH	S70-2413-01

PENDING ECN

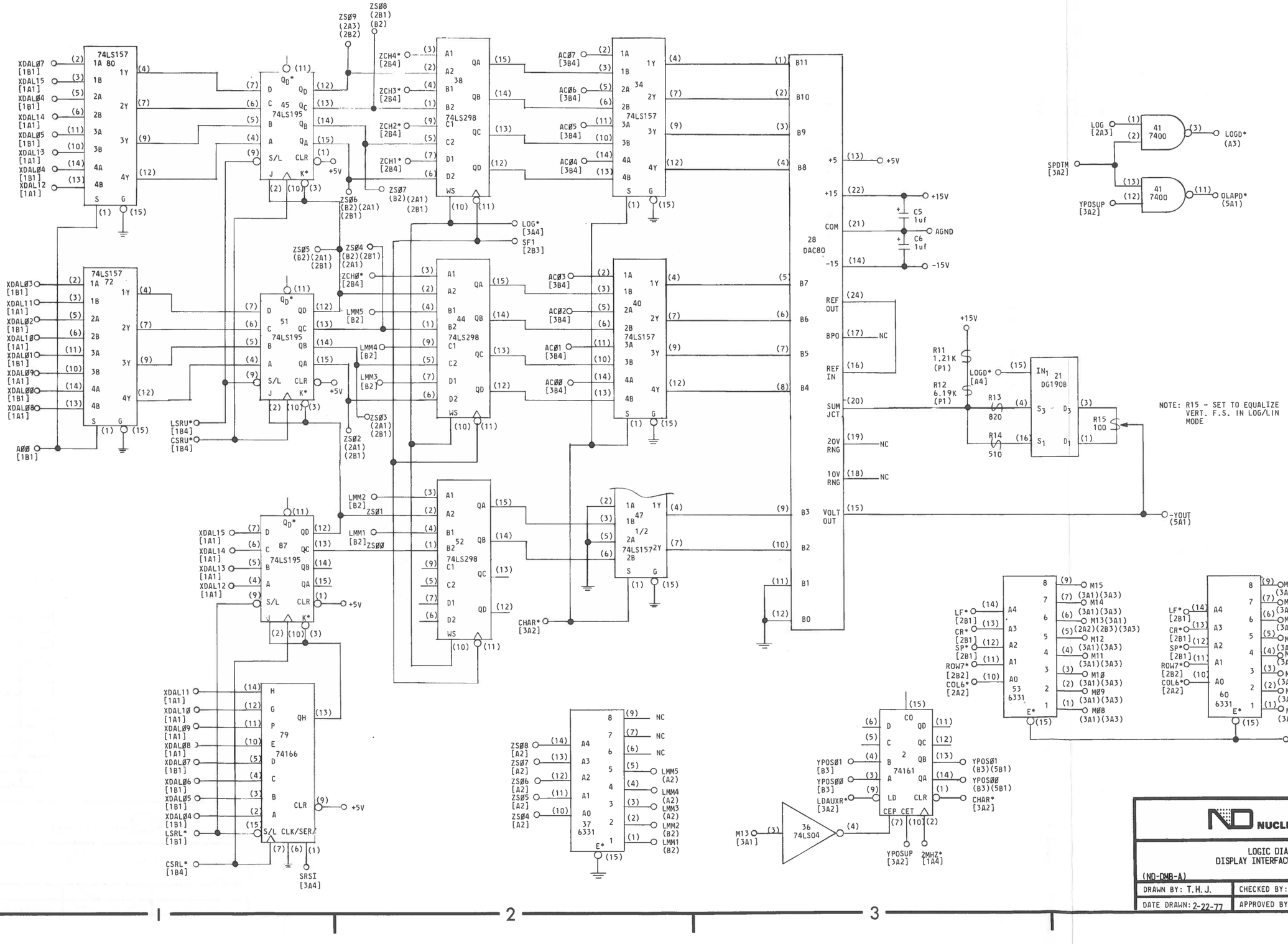

THIS DOCUMENT IS THE EXCLUSIVE PROPERTY OF NUCLEAR DATA, AND MAY NOT BE REPRODUCED, NOR MAY THE INFORMATION CONTAINED THEREIN OR DERIVABLE THEREFROM BE USED IN ANY MANNER, EXCEPT BY WRITTEN PERMISSION OF NUCLEAR DATA, THE PROPRIETARY RIGHTS TO THE AFORESAID INFORMATION, OF A PATENTABLE OR UNPATENTABLE NATURE, ARE EXPRESSLY RESERVED TO NUCLEAR DATA.

ECN	DATE

REVISIONS

PENDING ECN

NUCLEAR DATA

LOGIC DIAGRAM
DISPLAY INTERFACE ASSEMBLY

(ND-DMB-A)

DRAWN BY: T. H. J.	CHECKED BY: VdH	SHEET 4 OF 5
DATE DRAWN: 2-22-77	APPROVED BY: VdH	S70-2413-01

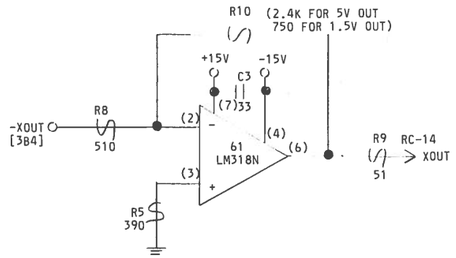

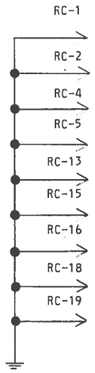

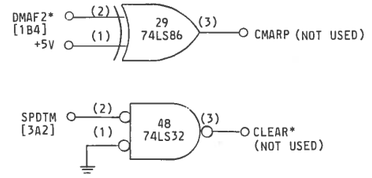

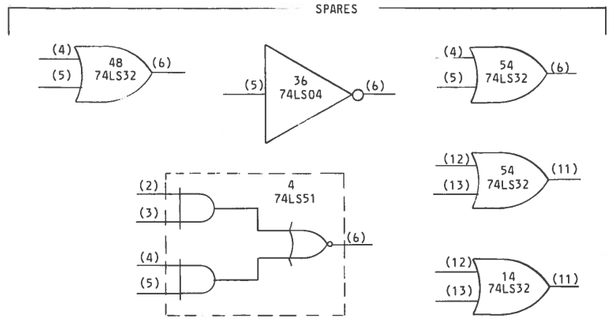

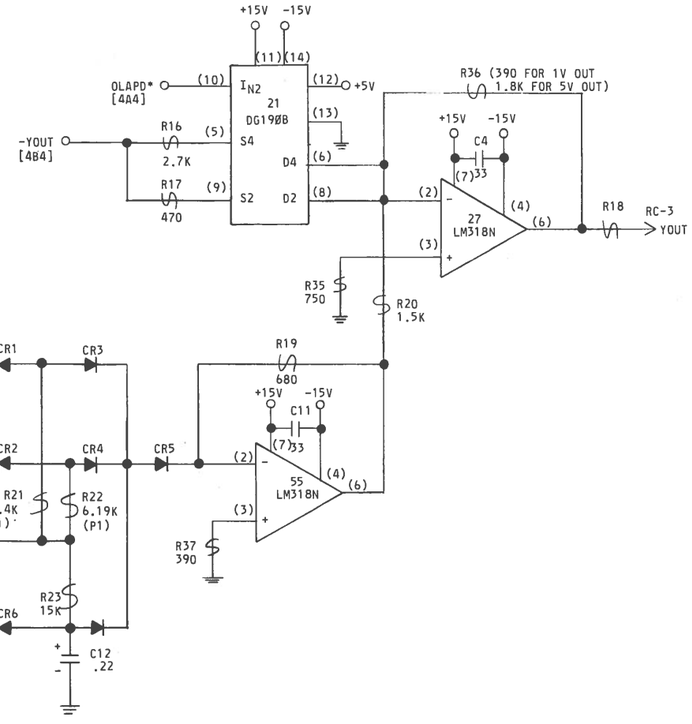

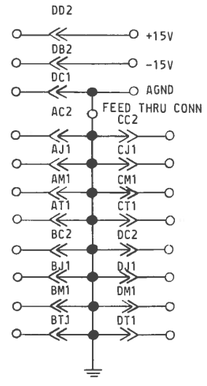

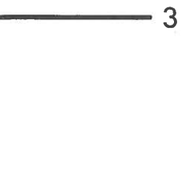

THIS DOCUMENT IS THE EXCLUSIVE PROPERTY OF NUCLEAR DATA, AND MAY NOT BE REPRODUCED, NOR MAY THE INFORMATION CONTAINED THEREIN OR DERIVABLE THEREFROM BE USED IN ANY MANNER, EXCEPT BY WRITTEN PERMISSION OF NUCLEAR DATA, OF A PATENTABLE OR UNPATENTABLE NATURE, ARE EXPRESSLY RESERVED TO NUCLEAR DATA.

ECN	DATE
REVISIONS	

PENDING ECN

NUCLEAR DATA

LOGIC DIAGRAM
DISPLAY INTERFACE ASSEMBLY

(ND-DMB-A)

DRAWN BY: T.H.J.	CHECKED BY: vdH	SHEET 5 OF 5
DATE DRAWN: 2-23-77	APPROVED BY: vdH	S70-2413-01

ALL CONNECTORS A & C					ALL CONNECTORS B & D				
PIN	SIGNAL	PIN	SIGNAL		PIN	SIGNAL	PIN	SIGNAL	
A1	BSPARE 1	A2	+5V		B1	BDCOKH J1-10 J3-1	A2	+5V	
B1	BSPARE 2	B2	-12V		C1	BPOKH J1-1	B2	-12V	
C1	BADI6 (NOT IMPLEMENTED)	C2	GND		D1	SSPARE 4 (NOT BUSED)	C2	GND	
D1	BADI7 (NOT IMPLEMENTED)	D2	+12V		E1	SSPARE 5 (NOT BUSED)	D2	+12V	
E1	SSPARE 1	E2	BDOUTL J2-4		F1	SSPARE 6 (NOT BUSED)	E2	BDAL2L J3-4	
F1	SSPARE 2	F2	BRPLYL J2-5		H1	SSPARE 7 (NOT BUSED)	F2	BDAL3L J3-5	
H1	SRUNL(NOTE 1)J1-2 (NOT BUSED)	H2	BDINL J2-6		J1	SSPARE 8 (NOT BUSED)	H2	BDAL4L J3-6	
J1	GND	J2	BSYNCL J2-7		K1	GND	J2	BDAL5L J3-7	
K1	MSPARE A (NOT BUSED)	K2	BWTBTL J2-8		L1	MSPARE B (NOT BUSED)	K2	BDAL6L J3-8	
L1	MSPARE A (NOT BUSED)	L2	BIRQL J2-9		M1	MSPARE B (NOT BUSED)	L2	BDAL7L J3-9	
M1	GND	M2	BIAKIL J2-11 DAISY CHAIN		N1	GND	M2	BDAL8L J3-10	
N1	BDMRL J2-1	N2	BIAKOL J2-10 DAISY CHAIN		P1	BSACKL J3-2	N2	BDAL9L J3-11	
P1	BHALTL J1-5 J2-2	P2	BBS7L J2-12		R1	BSPARE 6 (NOT BUSED)	P2	BDALI0L J3-12	
R1	BREFL J2-3	R2	BDMGIL J2-14 DAISY CHAIN		S1	BEVNTL J1-6 J3-3	R2	BDALI1L J3-13	
S1	PSPARE 3	S2	BDMGOL J2-13 DAISY CHAIN		T1	PSPARE 4 (NOT BUSED)	S2	BDALI2L J3-14	
T1	GND	T2	BINITL J2-15		U1	GND	T2	BDALI3L J3-15	
U1	PSPARE 1	U2	BDALØL J2-16		V1	PSPARE 2 (NOT BUSED)	U2	BDALI4L J3-16	
V1	+5VB	V2	BDALIL J2-17			+ 5V	V2	BDALI5L J3-17	

CONNECTOR J2				CONNECTOR J3			
PIN	SIGNAL	PIN	SIGNAL	PIN	SIGNAL	PIN	SIGNAL
1	BDMRL CN1	18	GND	1	BDCOKH DA1	18	GND
2	BHALTL CP1	19		2	BSACKL DN1	19	
3	BREFL CR1	20		3	BEVNTL DR1	20	
4	BDOUTL CE2	21		4	BDAL2L DE2	21	
5	BRPLYL CF2	22		5	BDAL3L DF2	22	
6	BDINL CH2	23		6	BDAL4L DH2	23	
7	BSYNCL CJ2	24		7	BDAL5L DJ2	24	
8	BWTBTL CK2	25		8	BDAL6L DK2	25	
9	BIRQL CL2	26		9	BDAL7L DL2	26	
10	BIAKOL AN2 ONLY DAISY CHAIN	27		10	BDAL8L DM2	27	
11	BIAKIL CM2 ONLY DAISY CHAIN	28		11	BDAL9L DN2	28	
12	BBS7L CP2	29		12	BDALI0L DP2	29	
13	BDMGOL AS2 ONLY DAISY CHAIN	30		13	BDALI1L DR2	30	
14	BDMGIL CR2 ONLY DAISY CHAIN	31		14	BDALI2L DS2	31	
15	BINITL CT2	32		15	BDALI3L DT2	32	
16	BDALØL CU2	33		16	BDALI4L DU2	33	
17	BDALIL CV2	34	GND	17	BDALI5L DV2	34	GND

CONNECTOR J1			
PIN	SIGNAL	PIN	SIGNAL
1	BPOKH BBI	6	BEVNTL BRI
2	SRUNL CHI PROCESSOR ONLY	7	NC
3	GND	8	+5V
4	NC	9	NC
5	BHALTL API	10	BDCOKH BAI

CONNECTOR P1	
PIN	SIGNAL
1	+12V
2	GND
3	-12V
4	+5V
5	+5VB

CONNECTOR P2	
PIN	SIGNAL
1	GND
2	+5V
3	GND

CONNECTOR P3	
PIN	SIGNAL
1	GND
2	+5V
3	GND

NOTE:
(1) SRUNL ON CONN. CHI, PROCESSOR MODULE ONLY.

ND-MMF	POWER SUPPLY 39-7009		
P1	J2		
P2	J3		
P3	J4		

VIEW FROM MODULE SIDE OF BACKPLANE

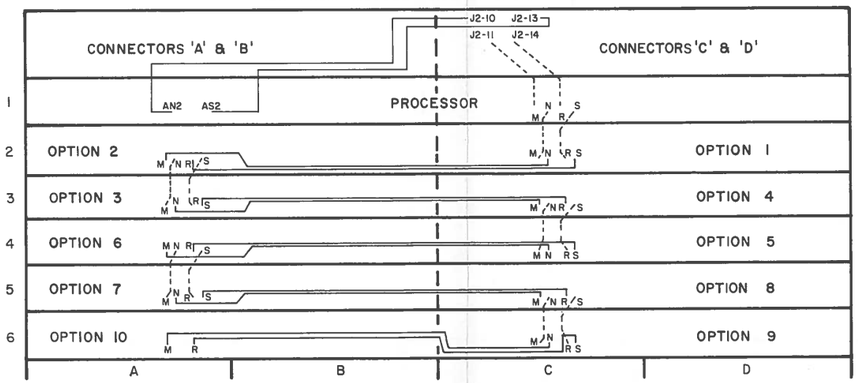

DAISY CHAIN INTERCONNECTIONS SHOWING OPTION LOCATIONS FOR PROPER PROPAGATION OF DAISY CHAINED SIGNALS.

(CONNECTIONS BETWEEN 'M2' TO 'N2' AND 'R2' TO 'S2' ARE MADE WHEN ANY STANDARD OPTION IS INSTALLED IN MODULE)

BSPARE (BUS SPARE) NOT ASSIGNED, RESERVED FOR DIGITAL USE, (BSPARES ARE BUSED, EXCEPT BSPARE6)

SSPARE (SPECIAL SPARE)-NOT ASSIGNED, NOT BUSED, AVAILABLE FOR USER INTERCONNECTIONS.

PSPARE (SPARE)- NOT ASSIGNED, NOT BUSED, CUSTOMER USAGE NOT RECOMMENDED.

MSPARE (MAINTENANCE SPARE) CONNECTED TOGETHER AT EACH OPTION LOCATION.

THIS DOCUMENT IS THE EXCLUSIVE PROPERTY OF NUCLEAR DATA, AND MAY NOT BE REPRODUCED, NOR MAY THE INFORMATION CONTAINED THEREIN OR DERIVABLE THEREFROM BE USED IN ANY MANNER, EXCEPT BY WRITTEN PERMISSION OF NUCLEAR DATA, THE PROPRIETARY RIGHTS TO THE AFORESAID INFORMATION, OF A PATENTABLE OR UNPATENTABLE NATURE, ARE EXPRESSLY RESERVED TO NUCLEAR DATA.

ECN	DATE
REVISIONS	

NUCLEAR DATA

CONNECTOR TABLES FOR BACKPLANE, FRONT (ND-MMF)

USED ON	DRAWN BY: RMG	CHECKED BY:	SHEET 1 OF 1
72-1374	DATE DRAWN: 3-2-77	APPROVED BY:	S70-2419-01

PENDING ECN

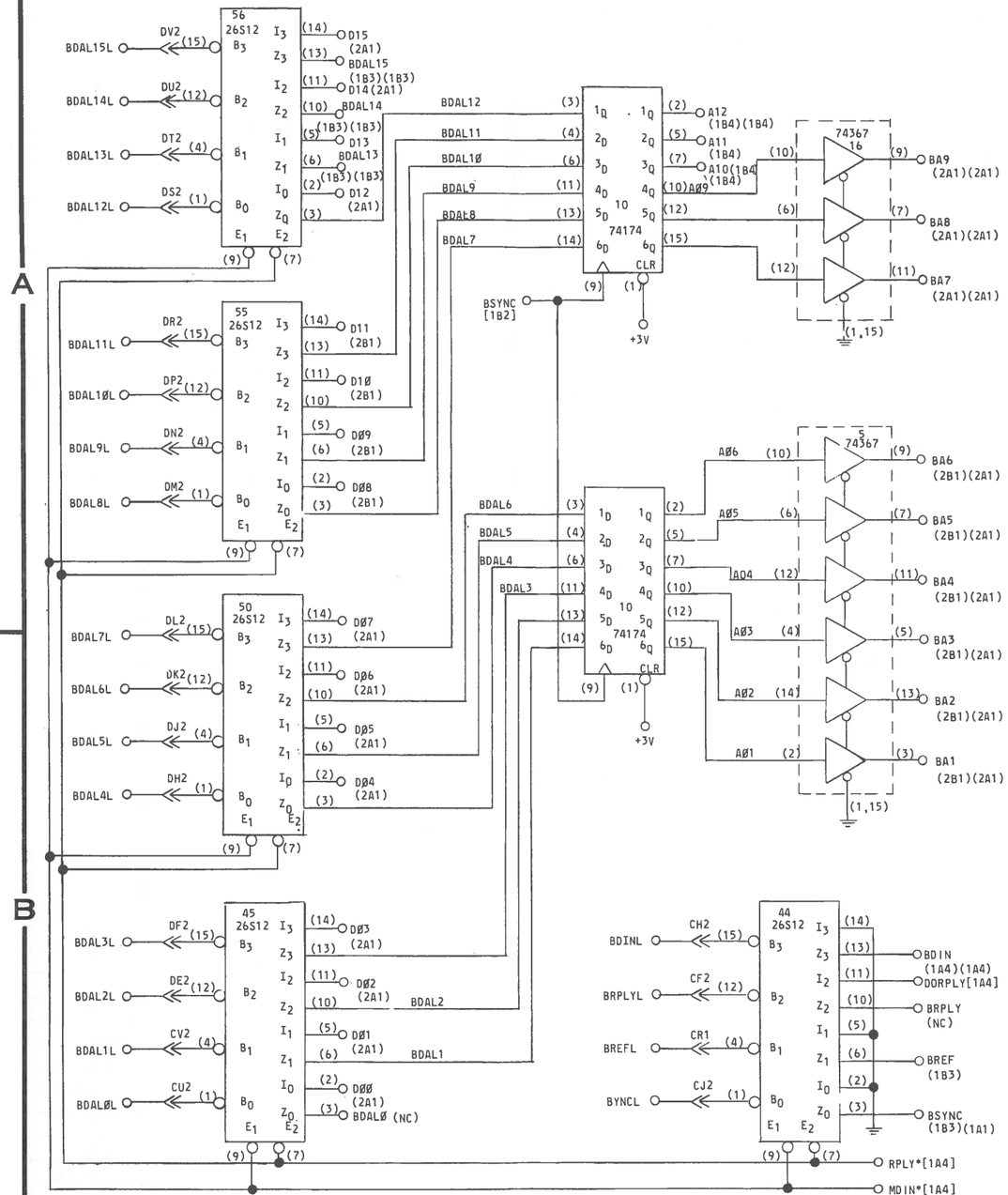

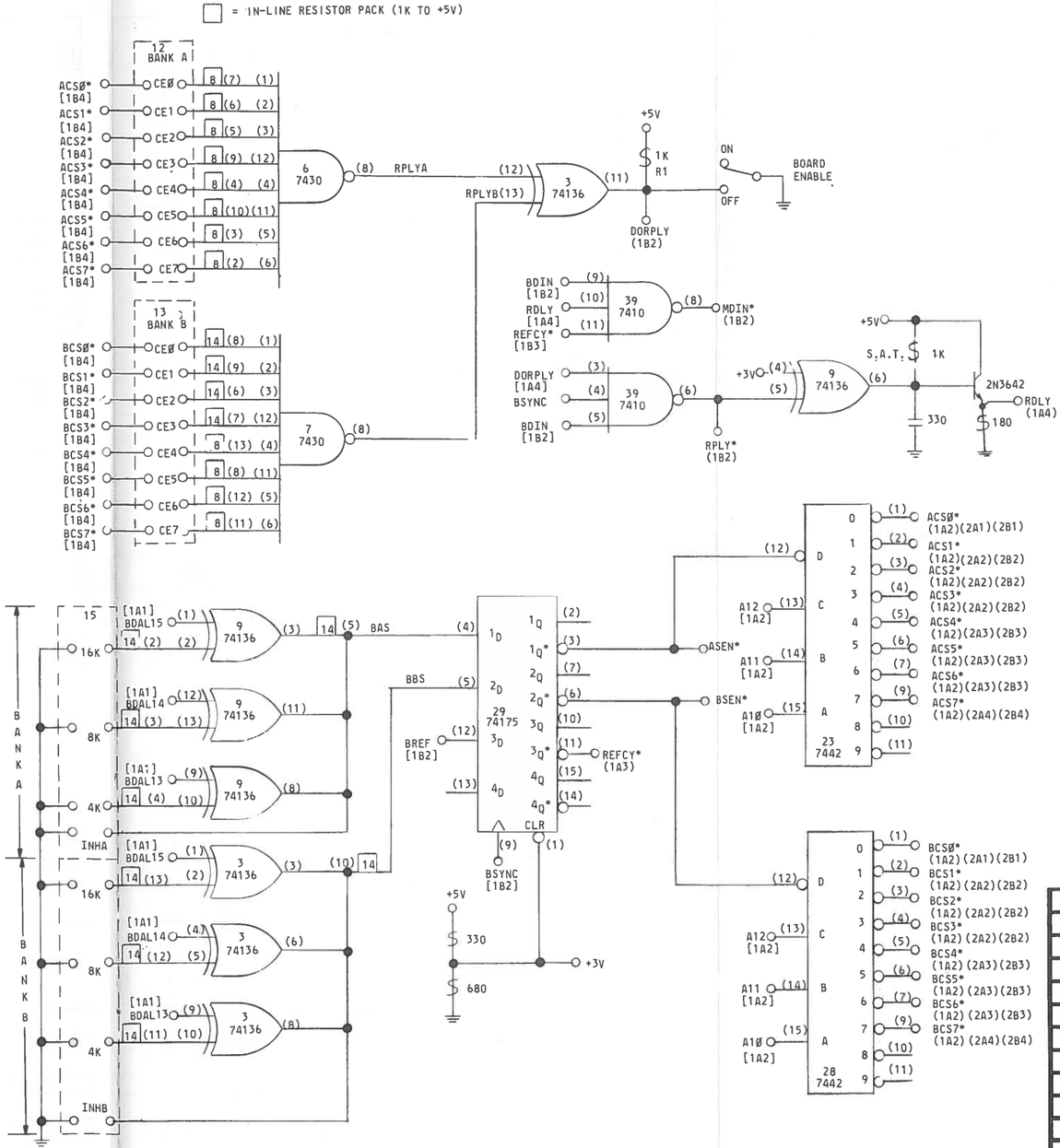

ECN	DATE
REVISIONS	

NOTES:

1 - ALL DIODES ARE G964 OR EQUIVALENT, EXCEPT AS NOTED.
2 - ALL RESISTORS ARE 1/4W, ±5%, EXCEPT AS NOTED.
3 - ALL CAPACITORS ARE pf, EXCEPT AS NOTED.
4 - I.C. VOLTAGES, EXCEPT AS NOTED:
14 PIN DIP, PIN (7) GND: PIN (14) +5V
16 PIN DIP, PIN (8) GND: PIN (16) +5V
24 PIN DIP, PIN (12) GND: PIN (24) +5V

5 - THE FOLLOWING SYMBOLS/NOTATIONS ARE USED ON THE DIAGRAM AND/OR PRINTED CIRCUIT BOARD ASSEMBLY.

IC - INTEGRATED CIRCUIT
Q - TRANSISTOR
( ) - IC PIN DESIGNATION
- CONNECTOR DESIGNATION
NC - NO CONNECTION
SAT - SELECT AT TEST
(P1) - PRECISION RESISTORS 100PPM 1/8W, ±1% METAL FILM
- DC COMMON
FB - FERRITE BEAD
- GERMANIUM DIODE
- SILICON DIODE
- ZENER DIODE
- TUNNEL DIODE
- SELENIUM DIODE

ADC* — SIGNAL NAME
[4A2] — SIGNAL SOURCE DRAWING LOCATION, OR
(4A2) — SIGNAL LOAD DRAWING LOCATION
ZONE LOCATION
SHEET NUMBER

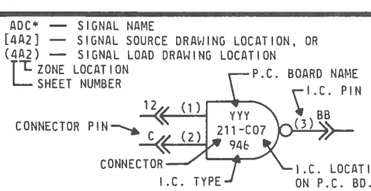

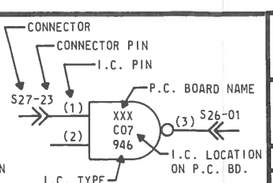

NUCLEAR DATA

LOGIC DIAGRAM
BASIC FIRMWARE ASSEMBLY
(ND-MMC-A)

DRAWN BY: T.H.J.	CHECKED BY:	SHEET 1 OF 2
DATE DRAWN: 11-19-76	APPROVED BY:	S70-2421-00

PENDING ECN

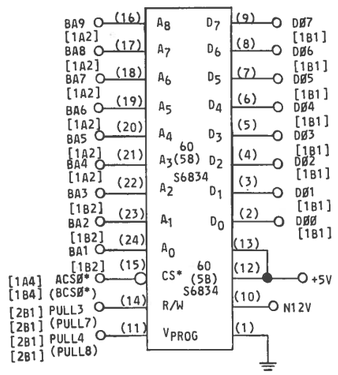

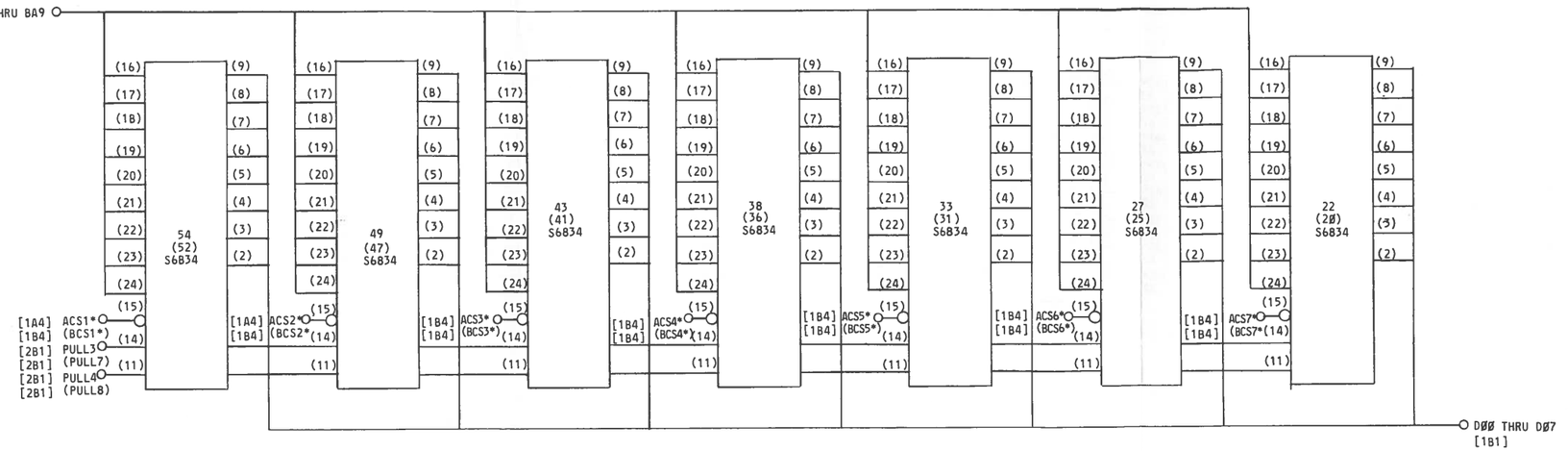

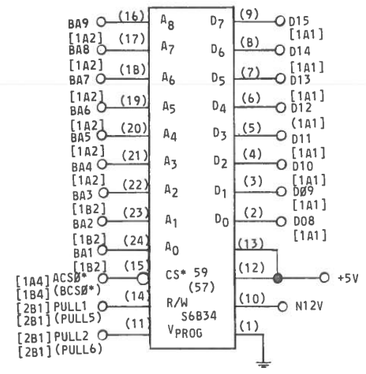

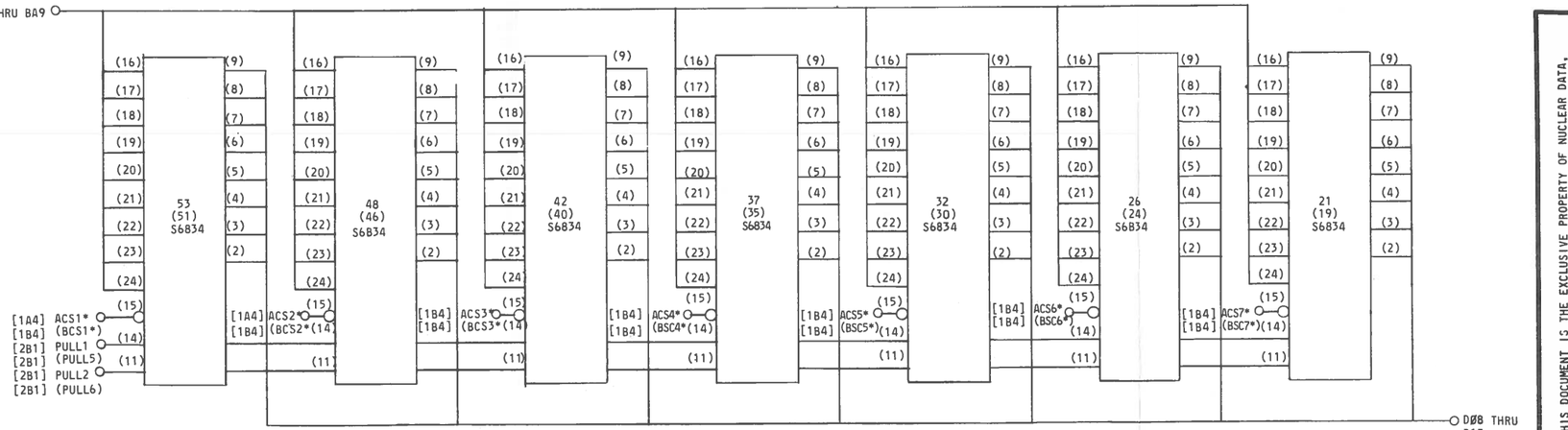

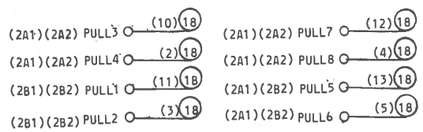

○ = IN-LINE RESISTOR PACK (2.2K TO +5V)

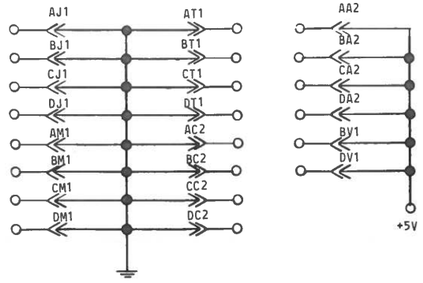

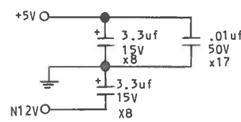

SPARE

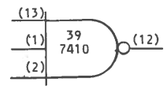

NOTES:
1. THIS SHEET SHOWS ONE BANK (A) BANK (B) IS IDENTICAL EXCEPT FOR SIGNALS AND I.C.NO.'S SHOWN IN PARENTHESIS.
2. ON EACH MEMORY BANK, ADDRESS (BA-), DATA-(D-) AND POWER-CONNECTIONS ARE BUSSED AND IDENTICAL TO THOSE SHOWN FOR IC59 AND IC60.

THIS DOCUMENT IS THE EXCLUSIVE PROPERTY OF NUCLEAR DATA, AND MAY NOT BE REPRODUCED, NOR MAY THE INFORMATION CONTAINED THEREIN OR DERIVABLE THEREFROM BE USED IN ANY MANNER, EXCEPT BY WRITTEN PERMISSION OF NUCLEAR DATA, OF A PATENTABLE OR UNRIGHTS TO THE AFORESAID INFORMATION, PATENTABLE NATURE, ARE EXPRESSLY RESERVED TO NUCLEAR DATA,

ECN	DATE
REVISIONS	

NUCLEAR DATA

LOGIC DIAGRAM
BASIC FIRMWARE ASSEMBLY
(ND-MMC-A)

DRAWN BY: T.H.J.	CHECKED BY:	SHEET 2 OF 2
DATE DRAWN: 11-19-76	APPROVED BY:	S70-2421-00

PENDING ECN

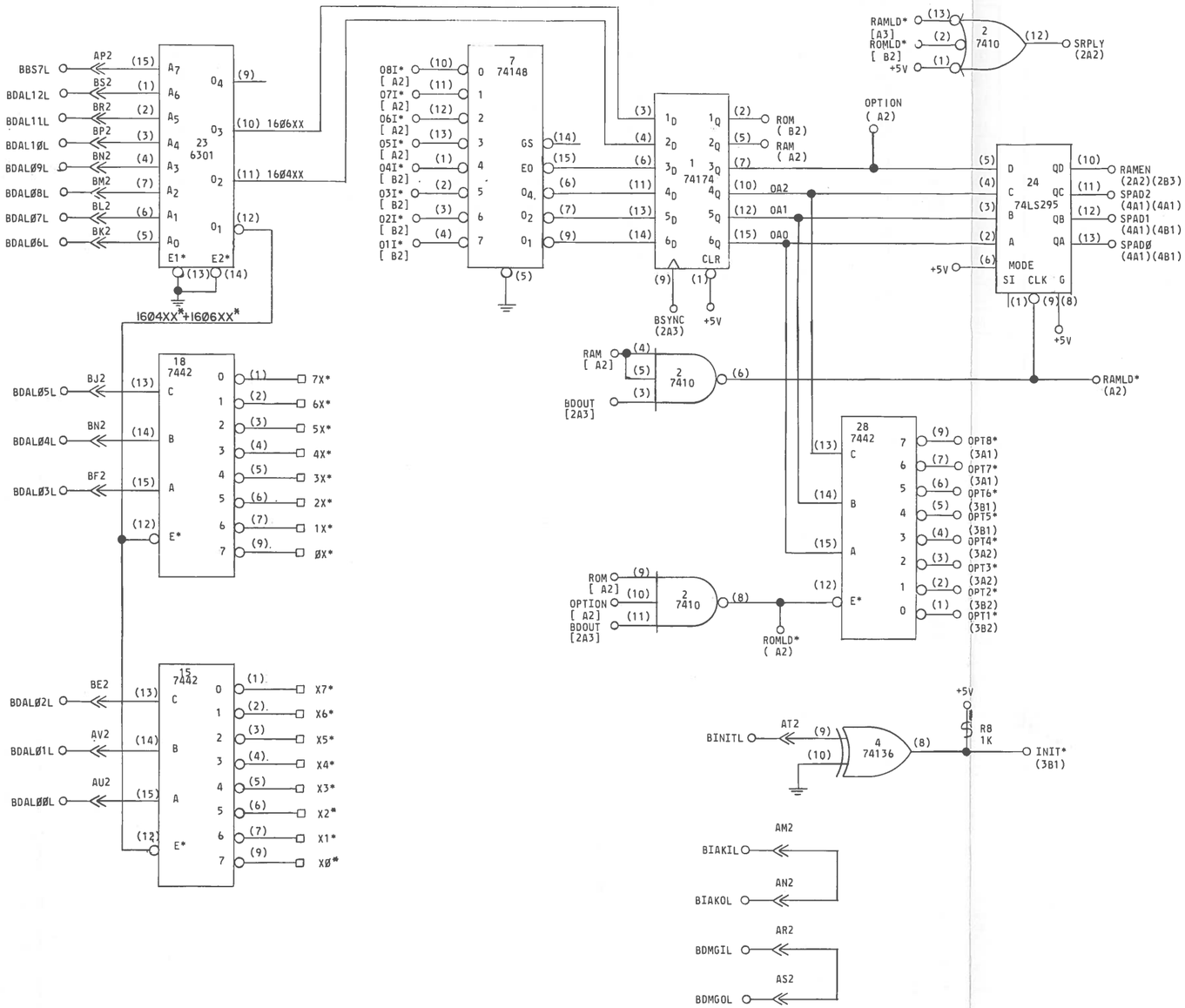

ECN	DATE
REVISIONS	

NOTES:

1 - ALL DIODES ARE G964 OR EQUIVALENT, EXCEPT AS NOTED.
2 - ALL RESISTORS ARE 1/4W, ±5%, EXCEPT AS NOTED.
3 - ALL CAPACITORS ARE pf, EXCEPT AS NOTED.
4 - I.C. VOLTAGES, EXCEPT AS NOTED:
14 PIN DIP, PIN (7) GND: PIN (14) +5V
16 PIN DIP, PIN (8) GND: PIN (16) +5V
24 PIN DIP, PIN (12) GND: PIN (24) +5V

5 - THE FOLLOWING SYMBOLS/NOTATIONS ARE USED ON THE DIAGRAM AND/OR PRINTED CIRCUIT BOARD ASSEMBLY.

IC - INTEGRATED CIRCUIT
Q - TRANSISTOR
( ) - IC PIN DESIGNATION
- CONNECTOR DESIGNATION
NC - NO CONNECTION
(12) (2) A2 PULL-UP RESISTOR
SAT - SELECT AT TEST
(P1) - PRECISION RESISTORS 100PPM 1/8W, ±1% METAL FILM
- DC COMMON
FB - FERRITE BEAD
WIRE WRAP POST
- GERMANIUM DIODE
- SILICON DIODE
- ZENER DIODE
- TUNNEL DIODE
- SELENIUM DIODE

ADC* — SIGNAL NAME
[4A2] — SIGNAL SOURCE DRAWING LOCATION, OR
(4A2) — SIGNAL LOAD DRAWING LOCATION
ZONE LOCATION
SHEET NUMBER

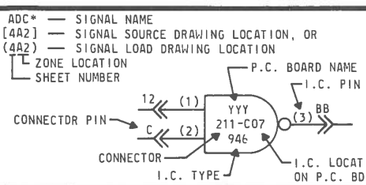

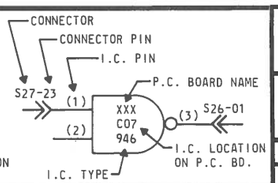

NUCLEAR DATA

LOGIC DIAGRAM
FIRMWARE OPTION BOARD
(ND-0DM-A)

DRAWN BY: T.H.J.	CHECKED BY:	SHEET 1 OF 6
DATE DRAWN: 11-23-76	APPROVED BY:	S70-2434-01

PENDING ECN

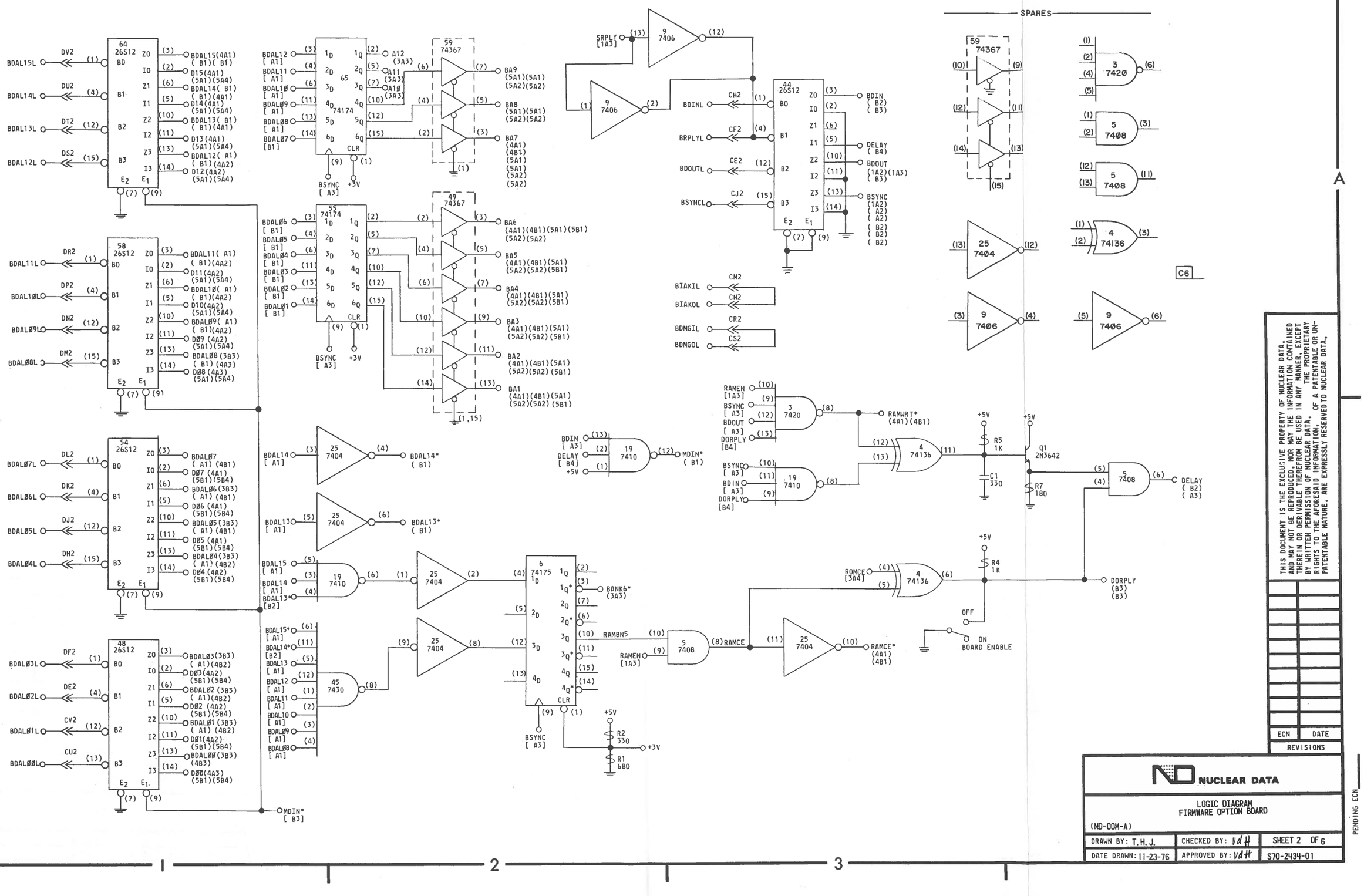

THIS DOCUMENT IS THE EXCLUSIVE PROPERTY OF NUCLEAR DATA, AND MAY NOT BE REPRODUCED, NOR MAY THE INFORMATION CONTAINED THEREIN OR DERIVABLE THEREFROM BE USED IN ANY MANNER EXCEPT BY WRITTEN PERMISSION OF NUCLEAR DATA, OF A PATENTABLE OR UNPATENTABLE NATURE, ARE EXPRESSLY RESERVED TO NUCLEAR DATA.

ECN	DATE
REVISIONS	

PENDING ECN

NUCLEAR DATA

LOGIC DIAGRAM
FIRMWARE OPTION BOARD

(ND-OOM-A)

DRAWN BY: T.H.J.	CHECKED BY: VdH	SHEET 2 OF 6
DATE DRAWN: 11-23-76	APPROVED BY: VdH	S70-2434-01

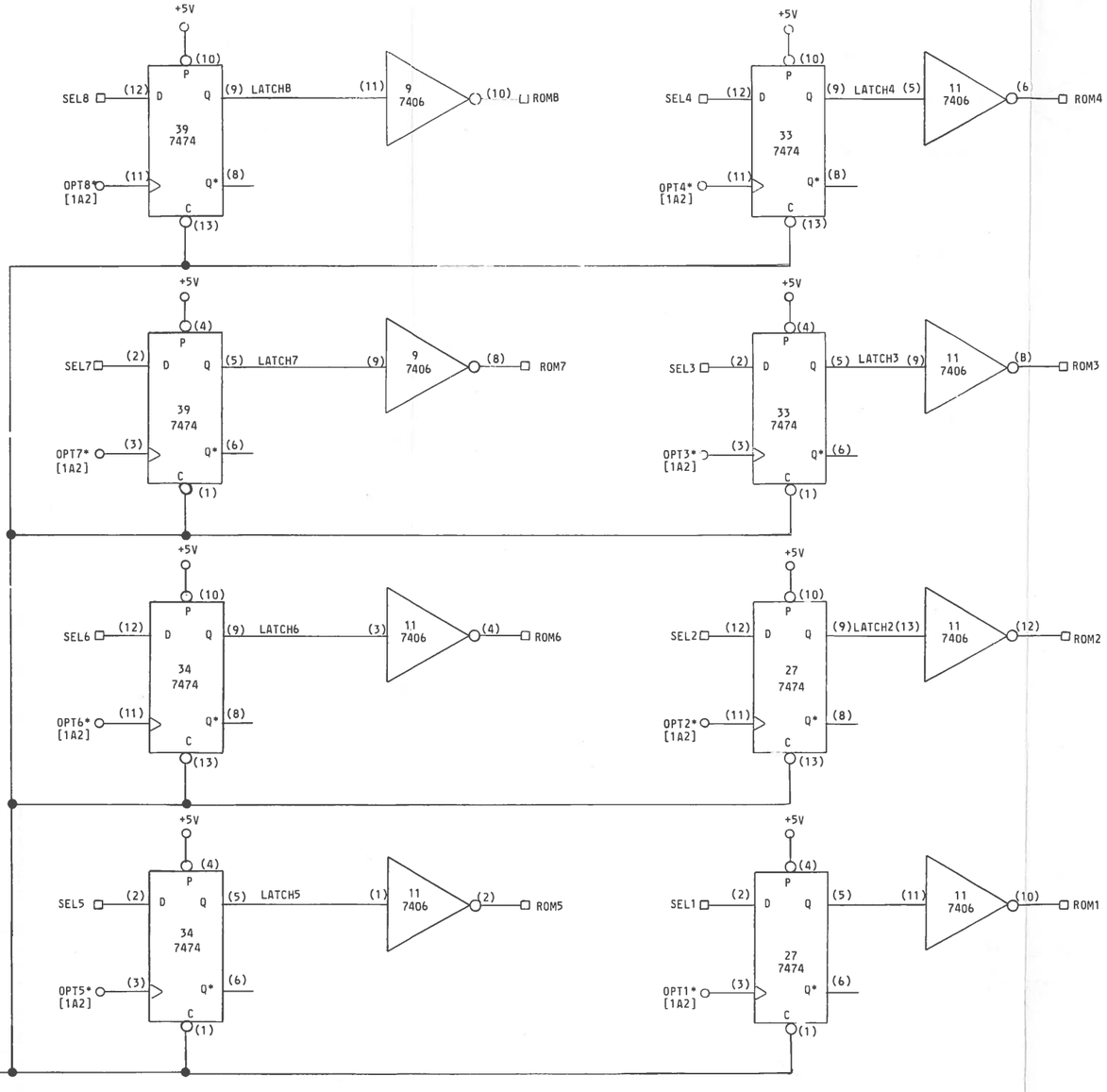

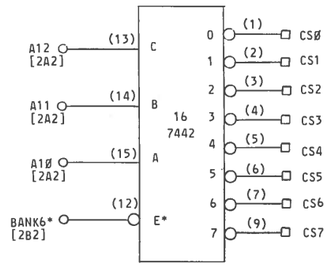

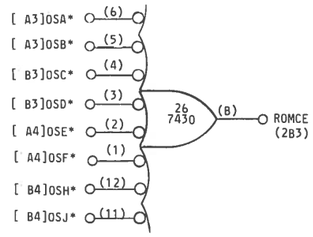

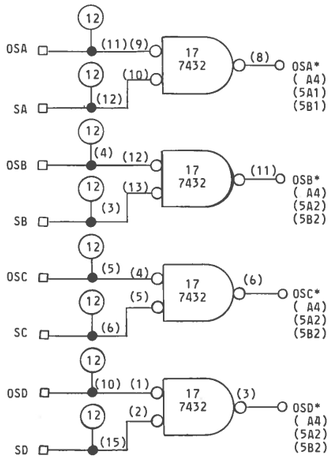

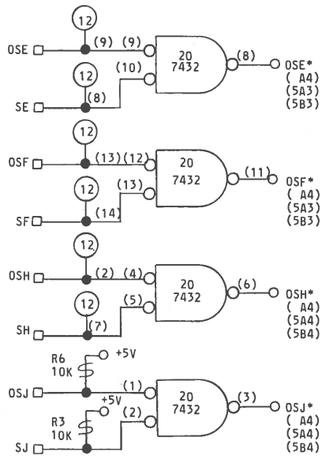

[2B1]BDALØ8 — BB
[2B1]BDALØ6 — B6
[2B1]BDALØ5 — B5
[2B1]BDALØ4 — B4
[2B1]BDALØ3 — B3
[2B1]BDALØ2 — B2
[2B1]BDALØ1 — B1
[2B1]BDALØØ — BØ

THIS DOCUMENT IS THE EXCLUSIVE PROPERTY OF NUCLEAR DATA, AND MAY NOT BE REPRODUCED, NOR MAY THE INFORMATION CONTAINED THEREIN OR DERIVABLE THEREFROM BE USED IN ANY MANNER, EXCEPT BY WRITTEN PERMISSION OF NUCLEAR DATA, OF A PATENTABLE OR UNPATENTABLE NATURE, ARE EXPRESSLY RESERVED TO NUCLEAR DATA;

ECN	DATE

REVISIONS

PENDING ECN

NUCLEAR DATA

LOGIC DIAGRAM
FIRMWARE OPTION BOARD
(ND-00M-A)

DRAWN BY: T. H. J.	CHECKED BY:	SHEET 3 OF 6
DATE DRAWN: 3-29-77	APPROVED BY:	S70-2434-01

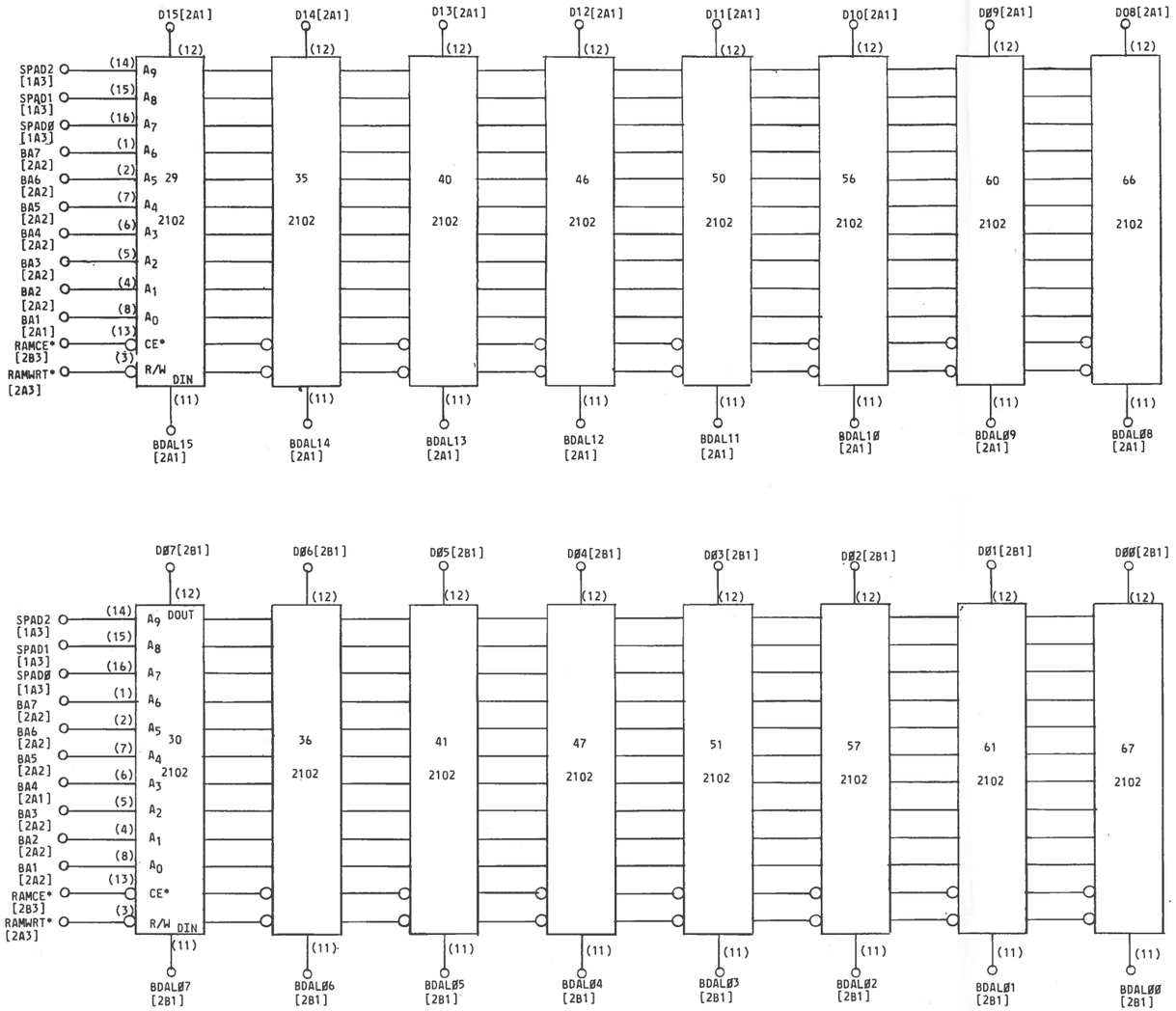

NOTE: +5V TO ALL 2102's (PIN 10)
GND TO ALL 2102's (PIN 9)

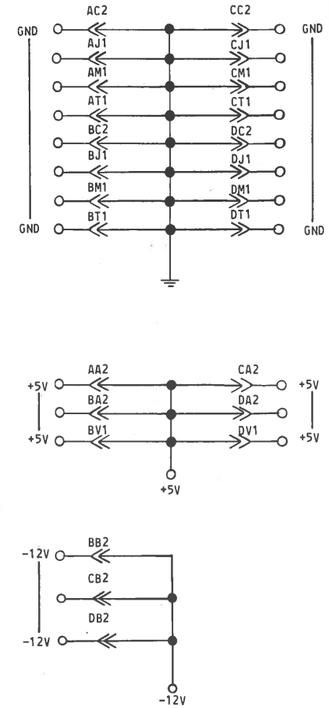

THIS DOCUMENT IS THE EXCLUSIVE PROPERTY OF NUCLEAR DATA, AND MAY NOT BE REPRODUCED NOR MAY THE INFORMATION CONTAINED THEREIN OR DERIVABLE THEREFROM BE USED IN ANY MANNER EXCEPT BY WRITTEN PERMISSION OF NUCLEAR DATA, OF A PATENTABLE OR UNPATENTABLE NATURE, ARE EXPRESSLY RESERVED TO NUCLEAR DATA.

ECN	DATE
REVISIONS	

NUCLEAR DATA

LOGIC DIAGRAM
FIRMWARE OPTION BOARD

(ND-00M-A)

DRAWN BY: T.H.J.	CHECKED BY:	SHEET 4 OF 6
DATE DRAWN: 11-24-76	APPROVED BY:	S70-2434-01

PENDING ECN

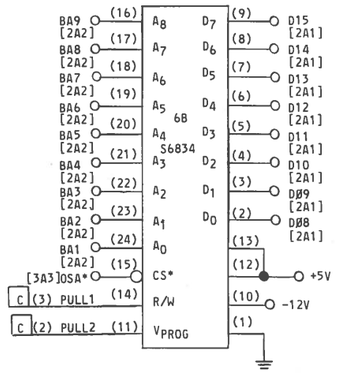

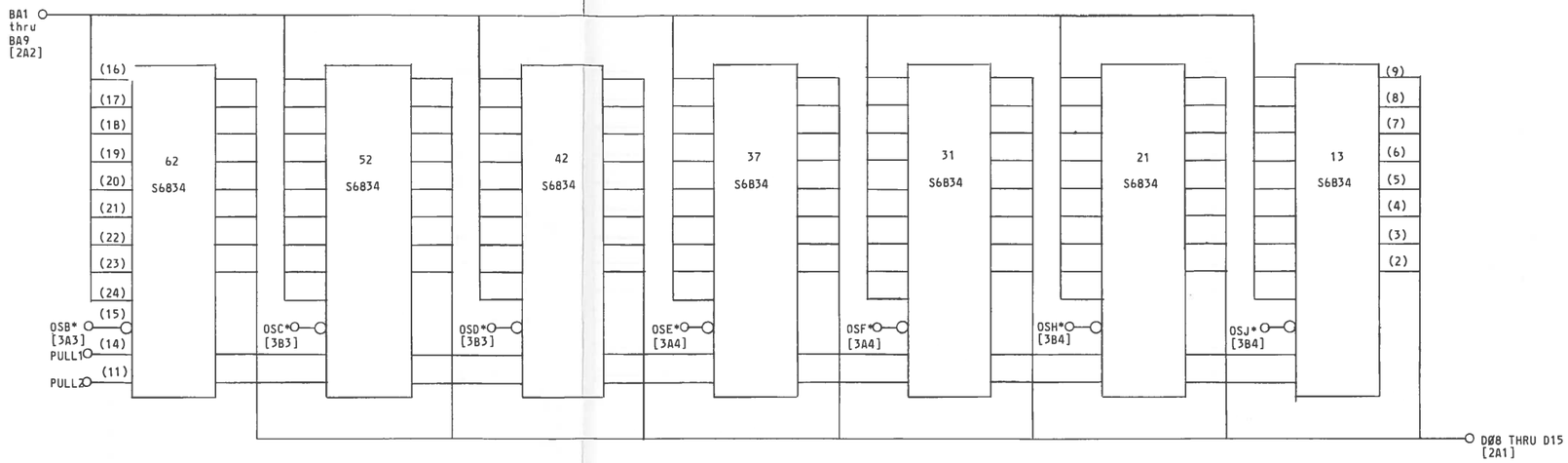

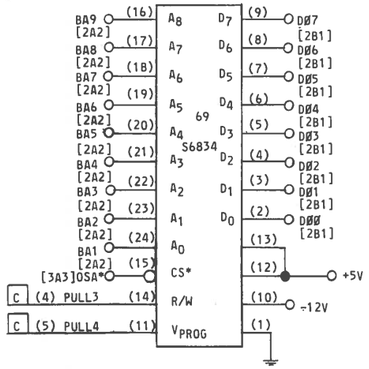

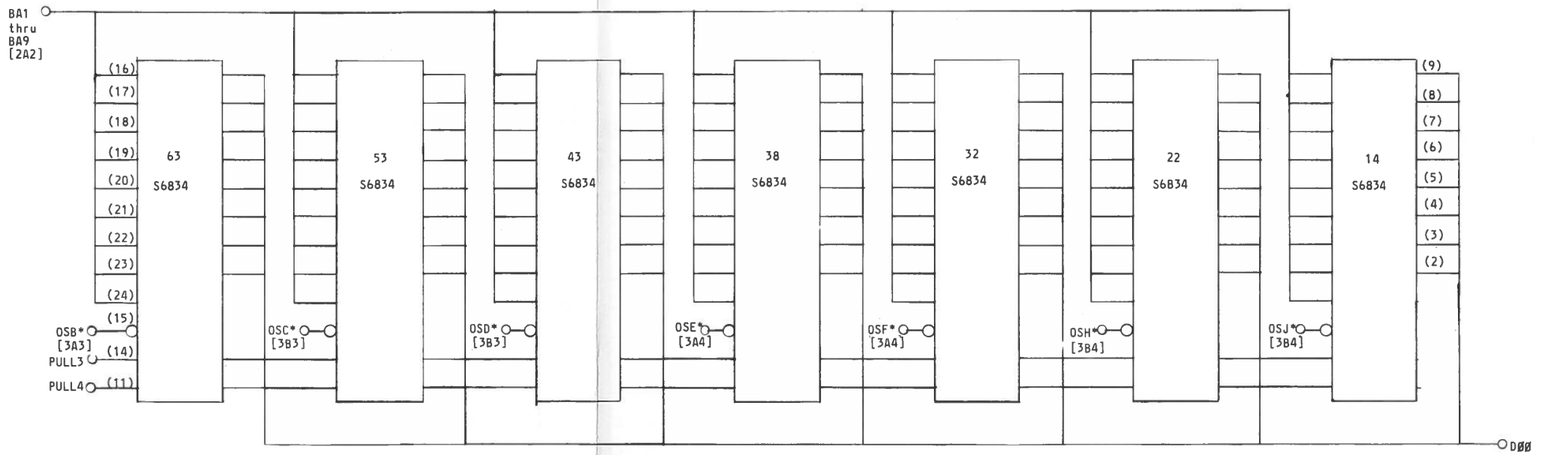

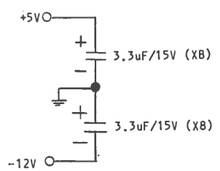

NOTES:
1. ON THIS MEMORY BANK, ADDRESS-(BA-), DATA-(D-) AND POWER CONNECTIONS ARE BUSED AND IDENTICAL TO THOSE SHOWN FOR IC68 AND IC69.

THIS DOCUMENT IS THE EXCLUSIVE PROPERTY OF NUCLEAR DATA, AND MAY NOT BE REPRODUCED, NOR MAY THE INFORMATION CONTAINED THEREIN OR DERIVABLE THEREFROM BE USED IN ANY MANNER, EXCEPT BY WRITTEN PERMISSION OF NUCLEAR DATA, THE PROPRIETARY RIGHTS TO THE AFORESAID INFORMATION, OF A PATENTABLE OR UNPATENTABLE NATURE, ARE EXPRESSLY RESERVED TO NUCLEAR DATA.

ECN	DATE

REVISIONS

PENDING ECN

NUCLEAR DATA

LOGIC DIAGRAM
FIRMWARE OPTION BOARD
(ND-00M-A)

DRAWN BY: T.H.J.	CHECKED BY: VdH	SHEET 5 OF 6
DATE DRAWN: 11-24-76	APPROVED BY: VdH	S70-2434-01

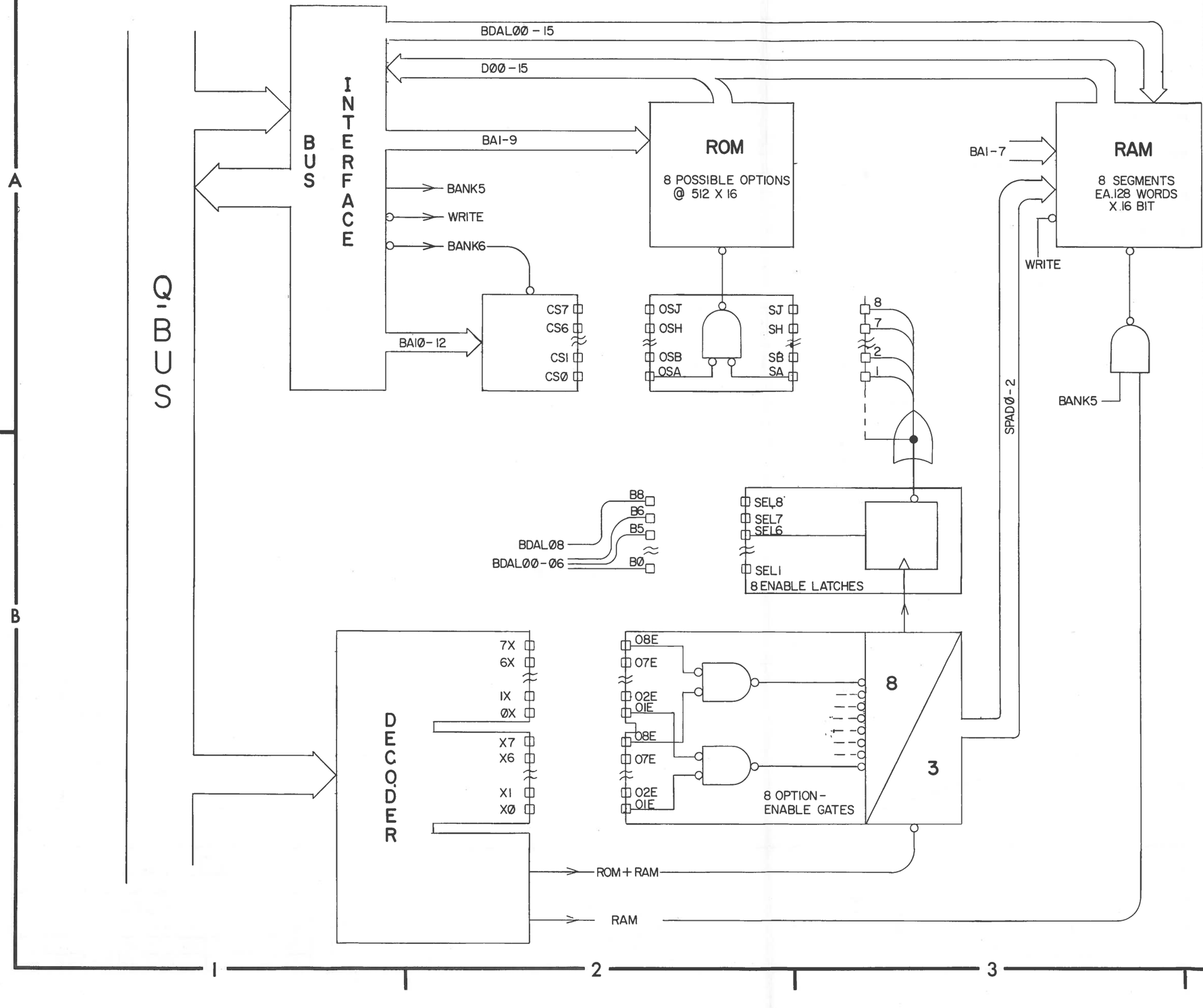

THIS DOCUMENT IS THE EXCLUSIVE PROPERTY OF NUCLEAR DATA, AND MAY NOT BE REPRODUCED, NOR MAY THE INFORMATION CONTAINED THEREIN OR DERIVABLE THEREFROM BE USED IN ANY MANNER, EXCEPT BY WRITTEN PERMISSION OF NUCLEAR DATA, THE PROPRIETARY RIGHTS TO THE AFORESAID INFORMATION, OF A PATENTABLE OR UNPATENTABLE NATURE, ARE EXPRESSLY RESERVED TO NUCLEAR DATA.

ECN	DATE
REVISIONS	

NUCLEAR DATA

BLOCK DIAGRAM
FIRMWARE OPTION BOARD
(ND-00M-A)

DRAWN BY: T.H.J.	CHECKED BY:	SHEET 6 OF 6
DATE DRAWN: 4/27/77	APPRDVED BY:	S70-2434-01

PENDING ECN

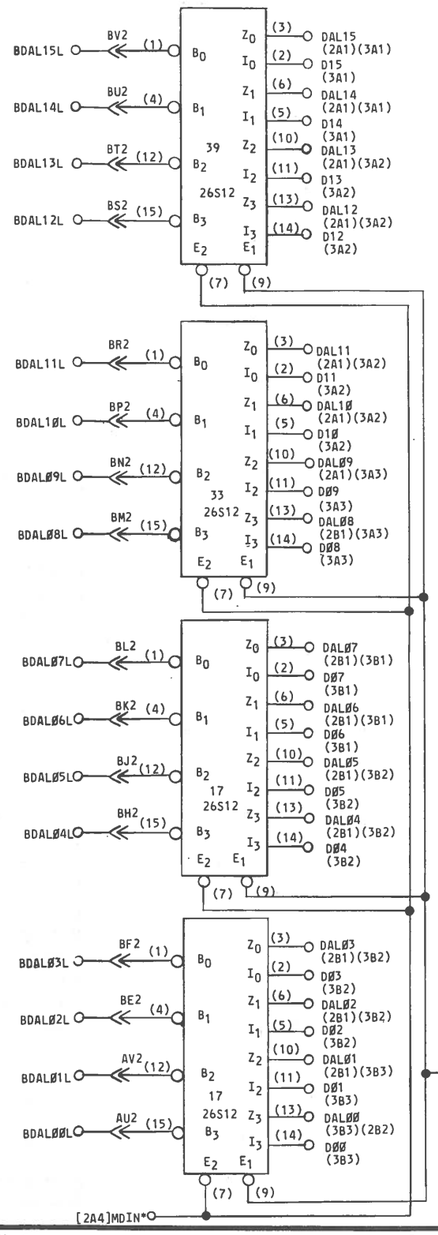

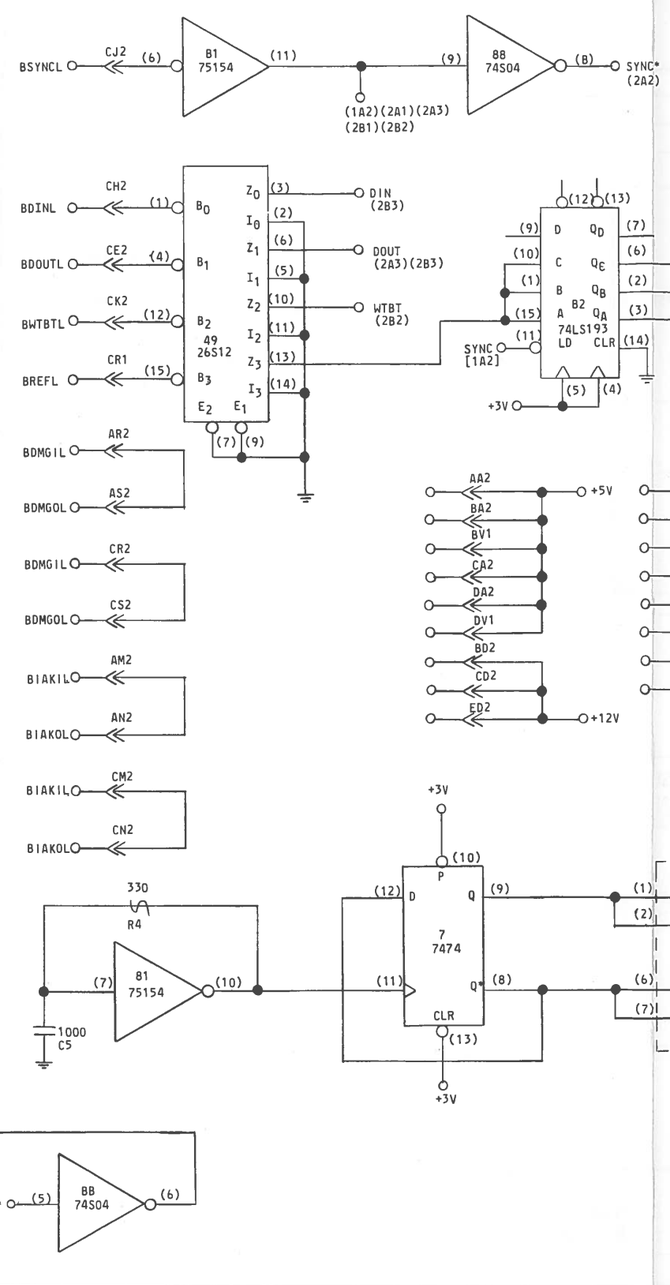

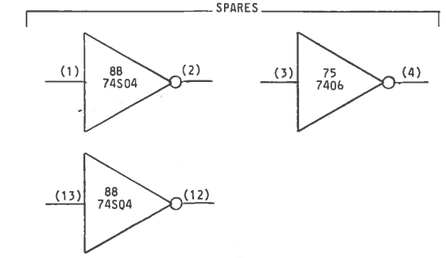

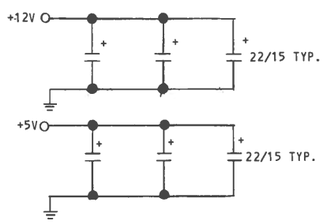

NOTES:

1 - ALL DIODES ARE G964 OR EQUIVALENT, EXCEPT AS NOTED.
2 - ALL RESISTORS ARE 1/4W, ±5%, EXCEPT AS NOTED.
3 - ALL CAPACITORS ARE pf, EXCEPT AS NOTED.
4 - I.C. VOLTAGES, EXCEPT AS NOTED:
14 PIN DIP, PIN (7) GND: PIN (14) +5V
16 PIN DIP, PIN (8) GND: PIN (16) +5V
24 PIN DIP, PIN (12) GND: PIN (24) +5V

5 - THE FOLLOWING SYMBOLS/NOTATIONS ARE USED ON THE DIAGRAM AND/OR PRINTED CIRCUIT BOARD ASSEMBLY.

IC - INTEGRATED CIRCUIT
Q - TRANSISTOR
( ) - IC PIN DESIGNATION
- CONNECTOR DESIGNATION
NC - NO CONNECTION
SAT - SELECT AT TEST
(P1) - PRECISION RESISTORS 100PPM 1/8W, ±1% METAL FILM
- DC COMMON
FB - FERRITE BEAD
A - IN-LINE RESISTOR PACK 1K TO +5V
- GERMANIUM DIODE
- SILICON DIODE
- ZENER DIODE
- TUNNEL DIODE
- SELENIUM DIODE
WIRE WRAP POST

ADC* — SIGNAL NAME
[4A2] — SIGNAL SOURCE DRAWING LOCATION, OR
(4A2) — SIGNAL LOAD DRAWING LOCATION
ZONE LOCATION
SHEET NUMBER

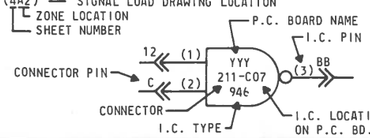

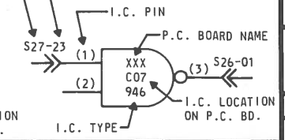

ECN	DATE
REVISIONS	

NUCLEAR DATA

LOGIC DIAGRAM
4K X 16 RAM MEMORY
(ND-ORM-A)(ND-ORM-B S70-2457-01)

DRAWN BY: T.H.J.	CHECKED BY:	SHEET 1 OF 3
DATE DRAWN: 11-22-76	APPROVED BY:	S70-2435-01

PENDING ECN

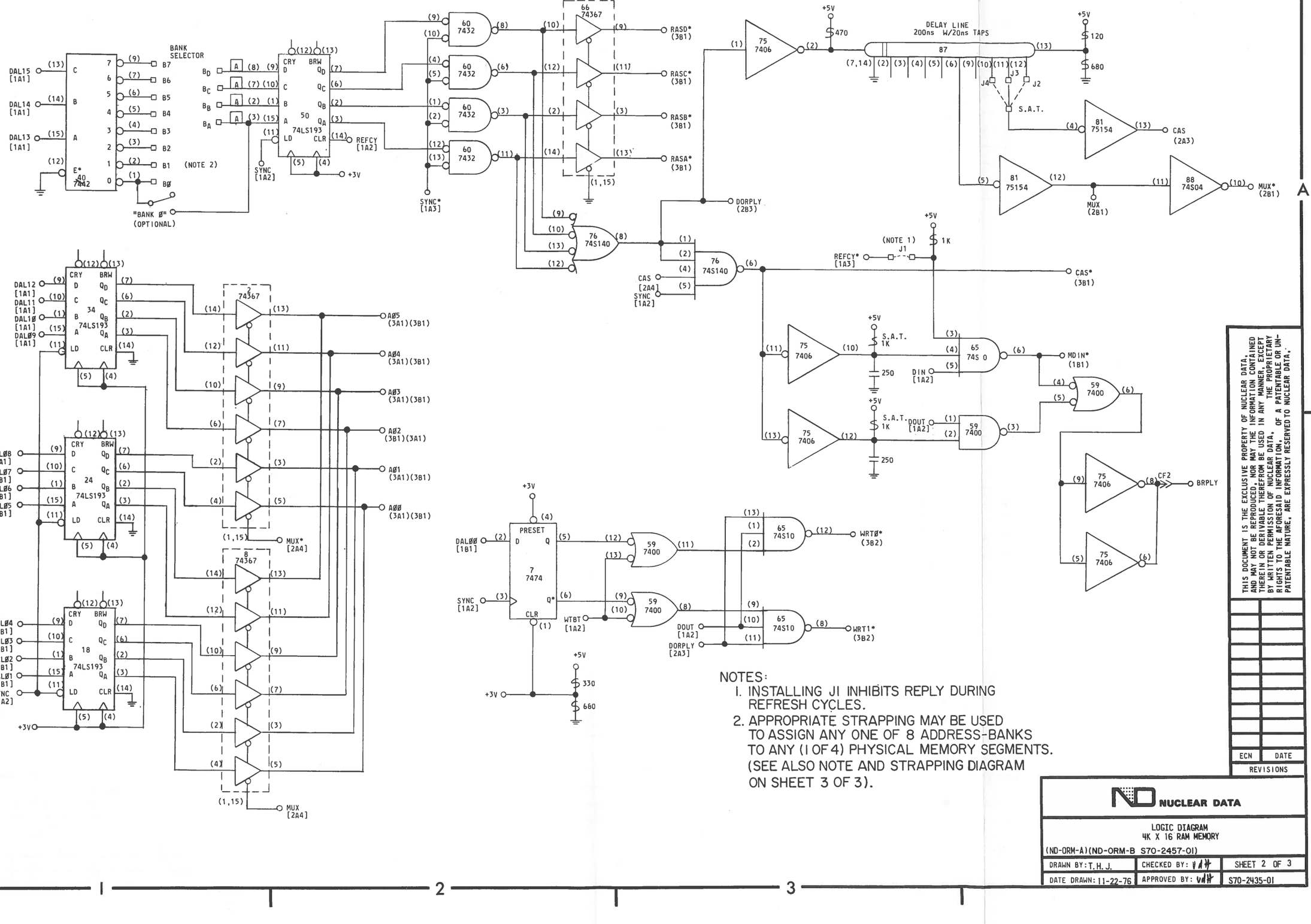

NOTES:

1. INSTALLING J1 INHIBITS REPLY DURING REFRESH CYCLES.
2. APPROPRIATE STRAPPING MAY BE USED TO ASSIGN ANY ONE OF 8 ADDRESS-BANKS TO ANY (1 OF 4) PHYSICAL MEMORY SEGMENTS. (SEE ALSO NOTE AND STRAPPING DIAGRAM ON SHEET 3 OF 3).

THIS DOCUMENT IS THE EXCLUSIVE PROPERTY OF NUCLEAR DATA, AND MAY NOT BE REPRODUCED, NOR MAY THE INFORMATION CONTAINED THEREIN OR DERIVABLE THEREFROM BE USED IN ANY MANNER, EXCEPT BY WRITTEN PERMISSION OF NUCLEAR DATA, THE PROPRIETARY RIGHTS TO THE AFORESAID INFORMATION, OF A PATENTABLE OR UNPATENTABLE NATURE, ARE EXPRESSLY RESERVED TO NUCLEAR DATA.

ECN	DATE
REVISIONS	

NUCLEAR DATA

LOGIC DIAGRAM
4K X 16 RAM MEMORY
(ND-ORM-A)(ND-ORM-B S70-2457-01)

DRAWN BY: T. H. J.	CHECKED BY:	SHEET 2 OF 3
DATE DRAWN: 11-22-76	APPROVED BY:	S70-2435-01

PENDING ECN

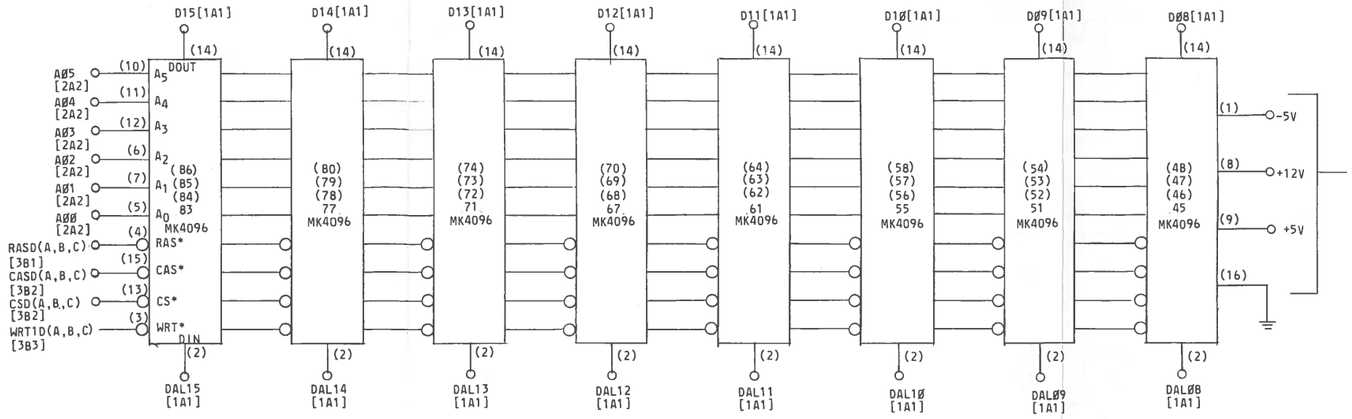

BIT / BANK	15	14	13	12	11	10	9	8	7	6	5	4	3	2	1	0	ND600 4K ORM-A 70-2435	ND660 + ND600 8K ORM-B 70-2457	ND660 (SECOND BOARD) ORM-B 70-2457
A	86	80	74	70	64	58	54	48	44	38	32	28	22	16	12	6	VOID	VOID	VOID
B	85	79	73	69	63	57	53	47	43	37	31	27	21	15	11	5	VOID	B4-B8	B6-B8
C	84	78	72	68	62	56	52	46	42	36	30	26	20	14	10	4	VOID	B3-BC	B5-BC
D	83	77	71	67	61	55	51	45	41	35	29	25	19	13	9	3	B2-BD	B2-BD	B0-BD

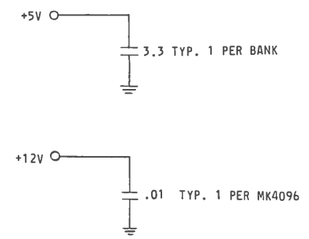

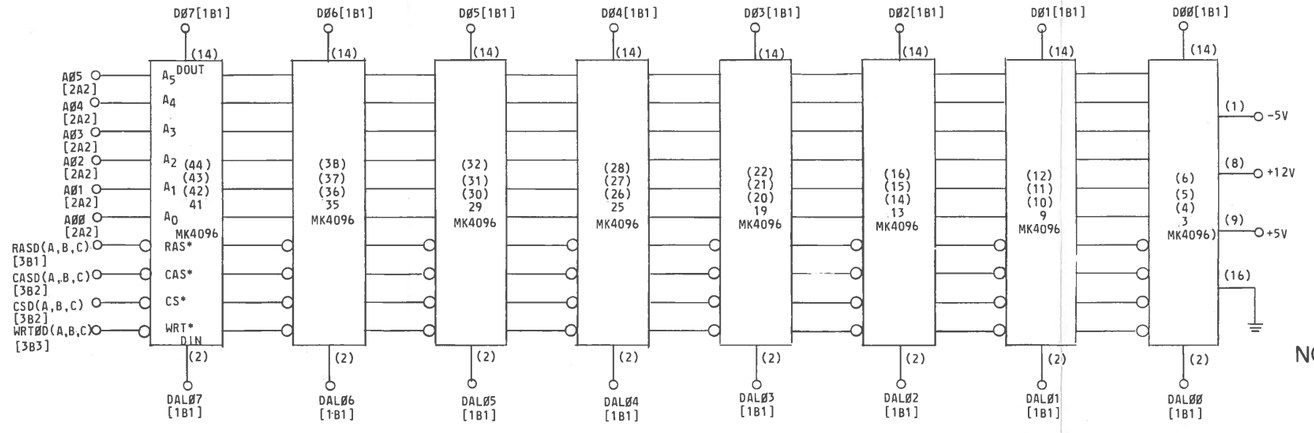

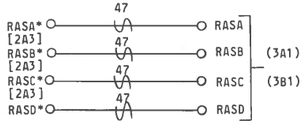

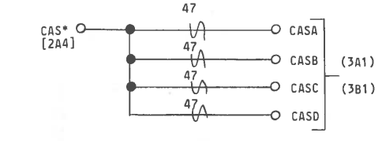

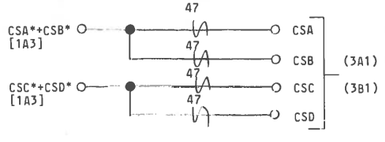

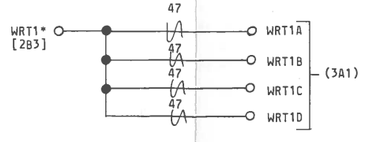

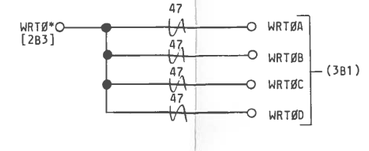

NOTE: THE BASIC LAYOUT OF THE ORM-P/C BOARD CAN ACCOMODATE UP TO FOUR BANKS OF MEMORY. TO CHANGE THE OPTION LEVEL OF THIS PRODUCT, COMPONENTS SHOWN IN PARENTHESES AND ASSOCIATED PARTS MUST BE INSTALLED. NUCLEAR DATA INC. RESERVES ALL RIGHTS TO THIS PROCEDURE.

THIS DOCUMENT IS THE EXCLUSIVE PROPERTY OF NUCLEAR DATA, AND MAY NOT BE REPRODUCED, NOR MAY THE INFORMATION CONTAINED THEREIN OR DERIVABLE THEREFROM BE USED IN ANY MANNER, EXCEPT BY WRITTEN PERMISSION OF NUCLEAR DATA, THE PROPRIETARY RIGHTS TO THE AFORESAID INFORMATION, OF A PATENTABLE OR UNPATENTABLE NATURE, ARE EXPRESSLY RESERVED TO NUCLEAR DATA.

ECN	DATE

REVISIONS

PENDING ECN

NUCLEAR DATA

LOGIC DIAGRAM
4K X 16 RAM MEMORY
(ND-ORM-A)(ND-ORM-B S70-2457-01)

DRAWN BY: T. H. J.	CHECKED BY:	SHEET 3 OF 3
DATE DRAWN: 11-22-76	APPROVED BY:	S70-2435-01

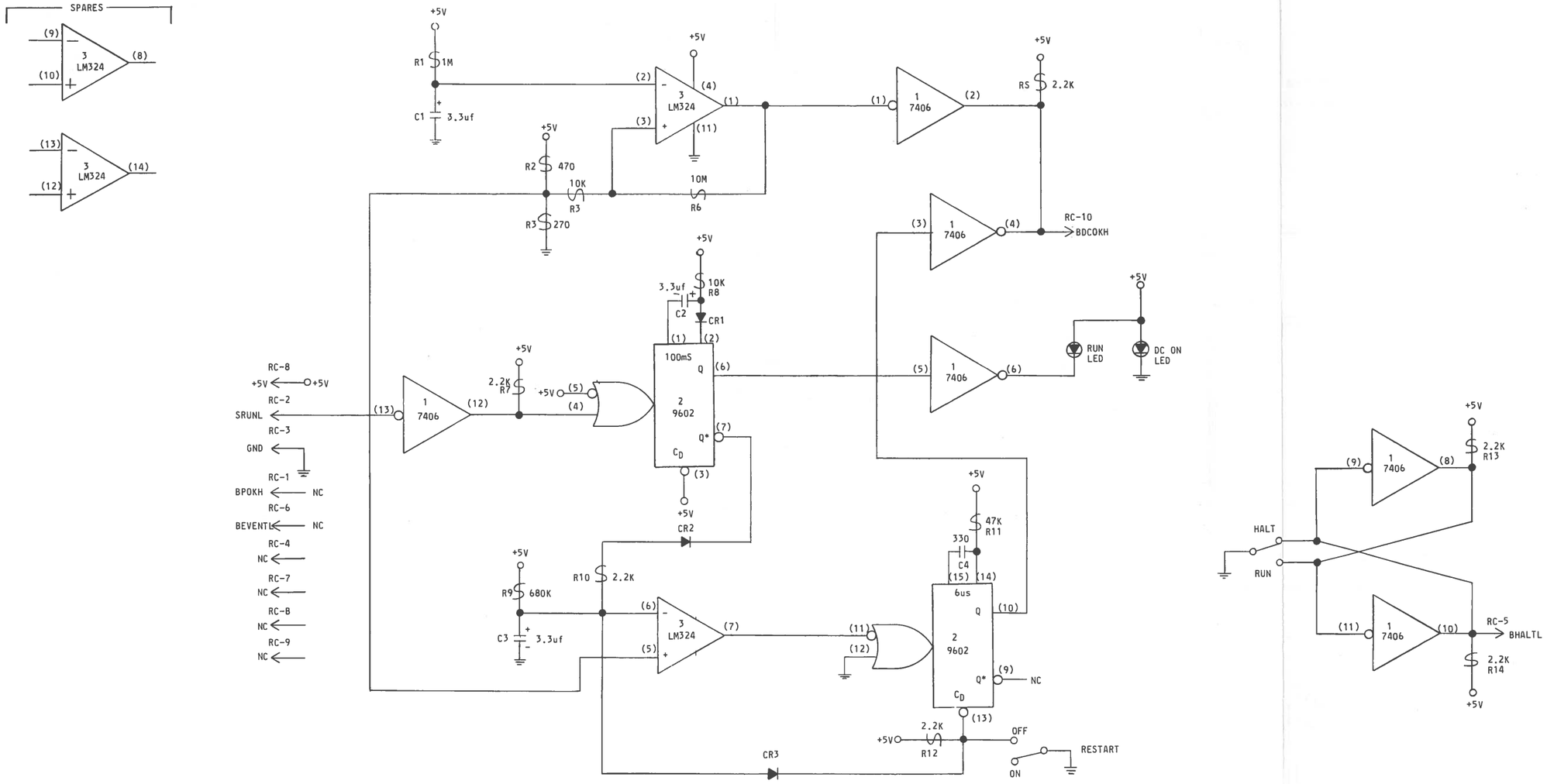

ECN	DATE

REVISIONS

NOTES:

1 - ALL DIODES ARE G964 OR EQUIVALENT, EXCEPT AS NOTED.
2 - ALL RESISTORS ARE 1/4W, ±5%, EXCEPT AS NOTED.
3 - ALL CAPACITORS ARE pf, EXCEPT AS NOTED.
4 - I.C. VOLTAGES, EXCEPT AS NOTED:
14 PIN DIP, PIN (7) GND: PIN (14) +5V
16 PIN DIP, PIN (8) GND: PIN (16) +5V
24 PIN DIP, PIN (12) GND: PIN (24) +5V

5 - THE FOLLOWING SYMBOLS/NOTATIONS ARE USED ON THE DIAGRAM AND/OR PRINTED CIRCUIT BOARD ASSEMBLY.

IC - INTEGRATED CIRCUIT
Q - TRANSISTOR
( ) - IC PIN DESIGNATION
- CONNECTOR DESIGNATION
NC - NO CONNECTION
SAT - SELECT AT TEST
(P1) - PRECISION RESISTORS 100PPM 1/8W, ±1% METAL FILM
- DC COMMON
FB - FERRITE BEAD
- GERMANIUM DIODE
- SILICON DIODE
- ZENER DIODE
- TUNNEL DIODE
- SELENIUM DIODE

ADC* — SIGNAL NAME
[4A2] — SIGNAL SOURCE DRAWING LOCATION, OR
(4A2) — SIGNAL LOAD DRAWING LOCATION
ZONE LOCATION
SHEET NUMBER

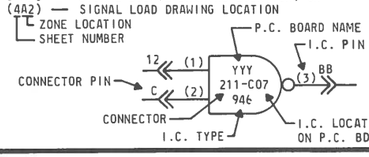

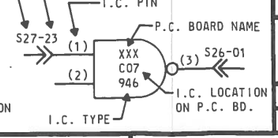

NUCLEAR DATA

LOGIC DIAGRAM
POWER MONITOR

(ND-PMM-A)

DRAWN BY: T.H.J.	CHECKED BY:	SHEET 1 OF 1
DATE DRAWN: 11-18-76	APPROVED BY:	S70-2439-00

PENDING ECN

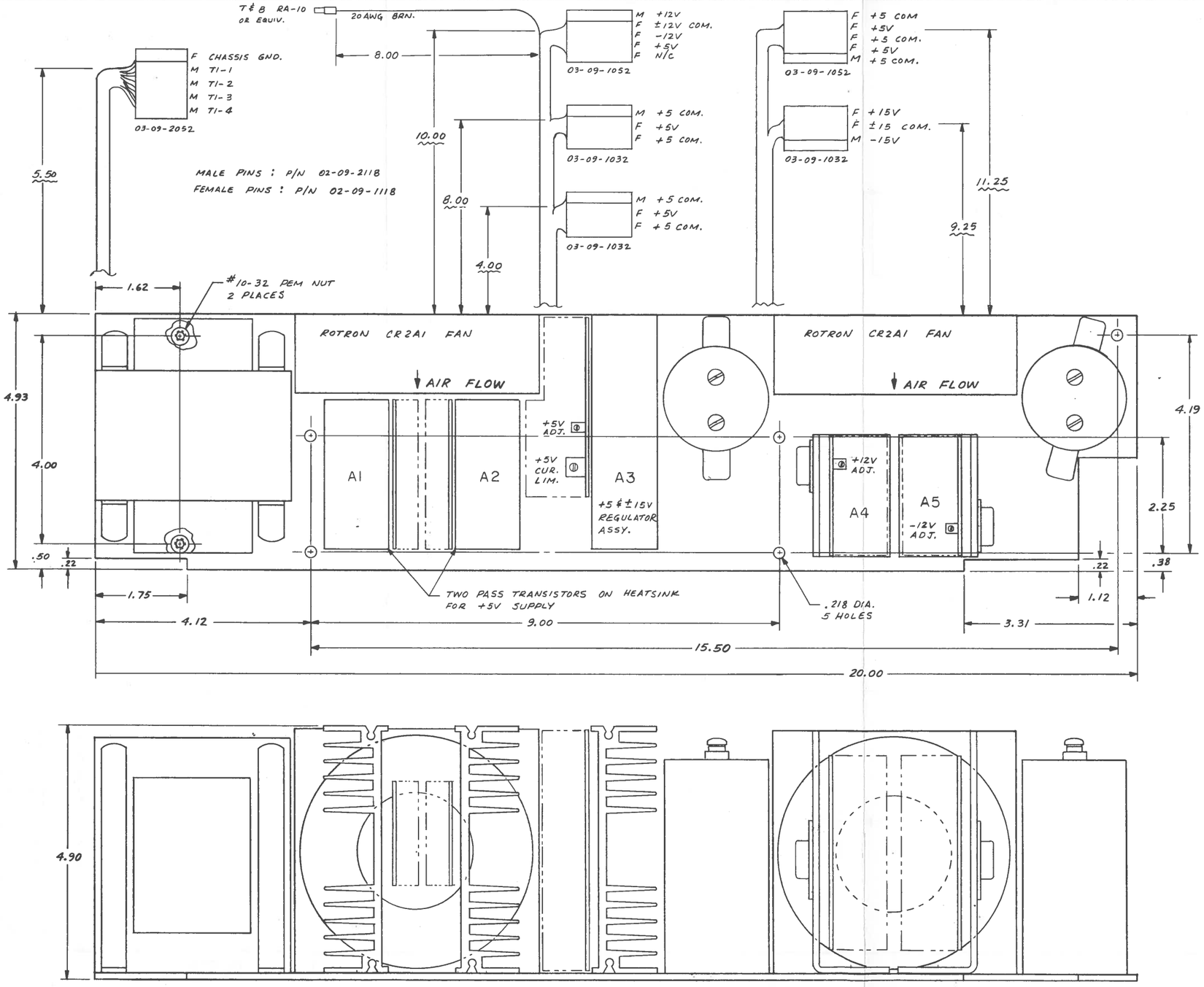

SPECIFICATIONS

1. INPUT : 110 OR 220 VAC, ±10%, 47-63 HZ
2. OUTPUTS :
   1. +5V, 25A
   2. +12V, 2.5A
   3. -12V, 2.5A
   } ADJUSTABLE ±5%
   4. +15V, 200MA (3 TERMINAL REG.)
   5. -15V, 200MA (3 TERMINAL REG.)
3. REGULATION : OUTPUTS 1, 2, & 3 - .1%
   OUTPUTS 4 & 5 - 1%
4. RIPPLE : .1% ON ALL OUTPUTS
5. PROTECTION : CURRENT LIMITING, SHORT CIRCUIT AND REVERSE VOLTAGE PROTECTION ON ALL OUTPUTS
6. OPERATING TEMP. : 0-55°C
7. RECOMMENDED INPUT FUSING : 5A. FOR 110VAC
   2.5A FOR 220 VAC

NUCLEAR DATA

A72-1408-00
(39-7009)

SHT. 1 OF 3

B	ADDED 20 AWG BRN. WIRE 8" LG	GM 3-22-77
A	REDESIGNED AND REDRAWN WAS 'C' SIZE	GM 8-2-76

XENTEK INC.
SAN MARCOS, CALIF.

SCALE: 1:1	APPROVED BY:	DRAWN BY GM
DATE: 7-30-76		REVISED

POWER SUPPLY OUTLINE

NUCLEAR DATA MODEL 2785 — DRAWING NUMBER D2785-X01

REV. B

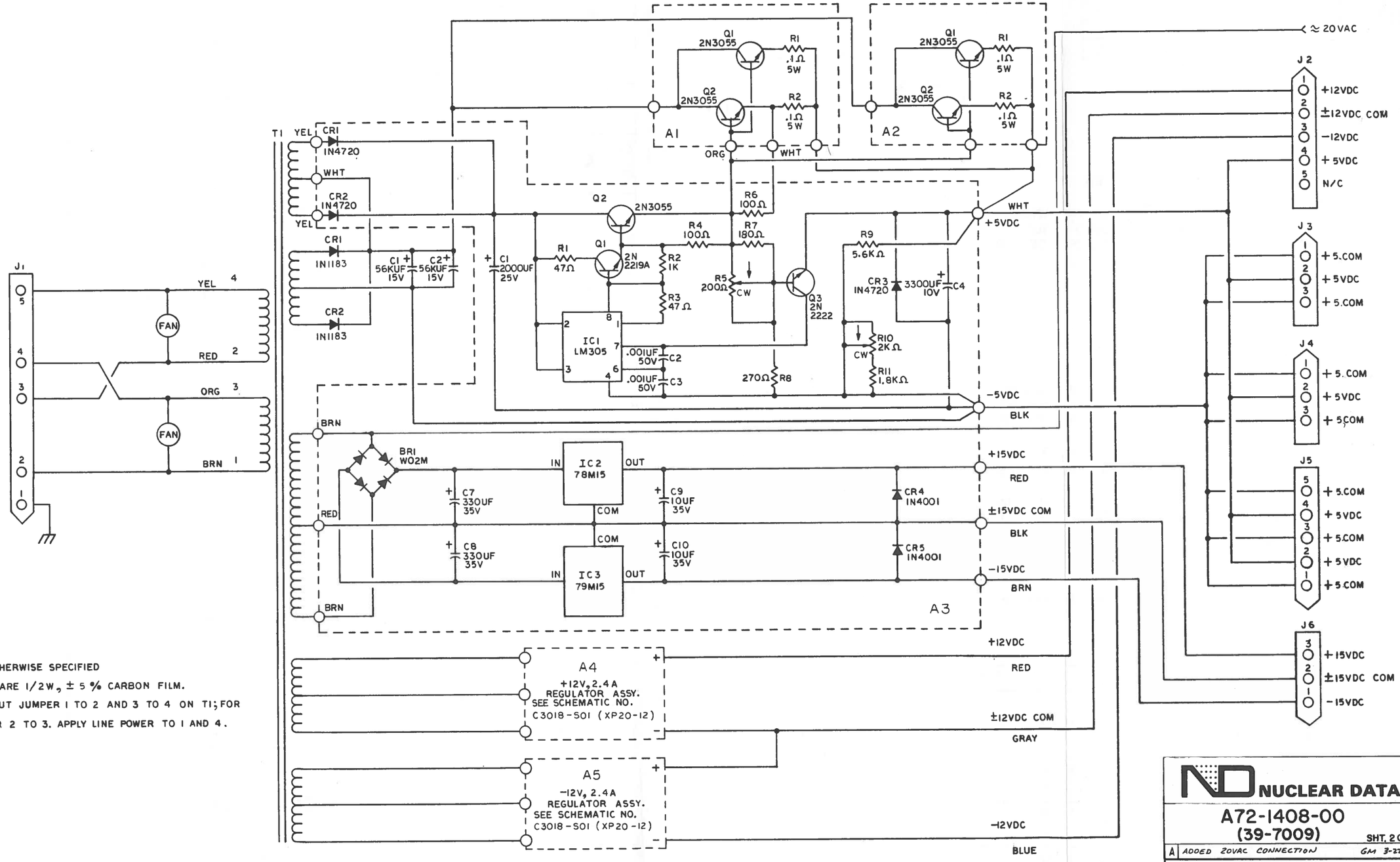

NOTES: UNLESS OTHERWISE SPECIFIED

1. ALL RESISTORS ARE 1/2W, ± 5 % CARBON FILM.
2. FOR 115 VAC INPUT JUMPER 1 TO 2 AND 3 TO 4 ON T1; FOR 230 VAC JUMPER 2 TO 3. APPLY LINE POWER TO 1 AND 4.

NUCLEAR DATA

A72-1408-00
(39-7009)
SHT. 2 OF 3

A	ADDED 20VAC CONNECTION	GM 3-22-77

XENTEK INC.
SAN MARCOS, CALIF.

SCALE:	APPROVED BY:	DRAWN BY: MAR
DATE: 10-12-76		REVISED

POWER SUPPLY SCHEMATIC

NUCLEAR DATA — DRAWING NUMBER D2785-501

REV. A

8X24 PRINTED ON NO. 1000H CLEARPRINT

OVP TABULATION				
MODEL	R2	R4	R5	R7
3,5,9	470Ω	1.2K	1.5K	- - -
12	1.2K	2.2K	1K	47Ω
24,28	1.5K	4.7K	1K	390Ω

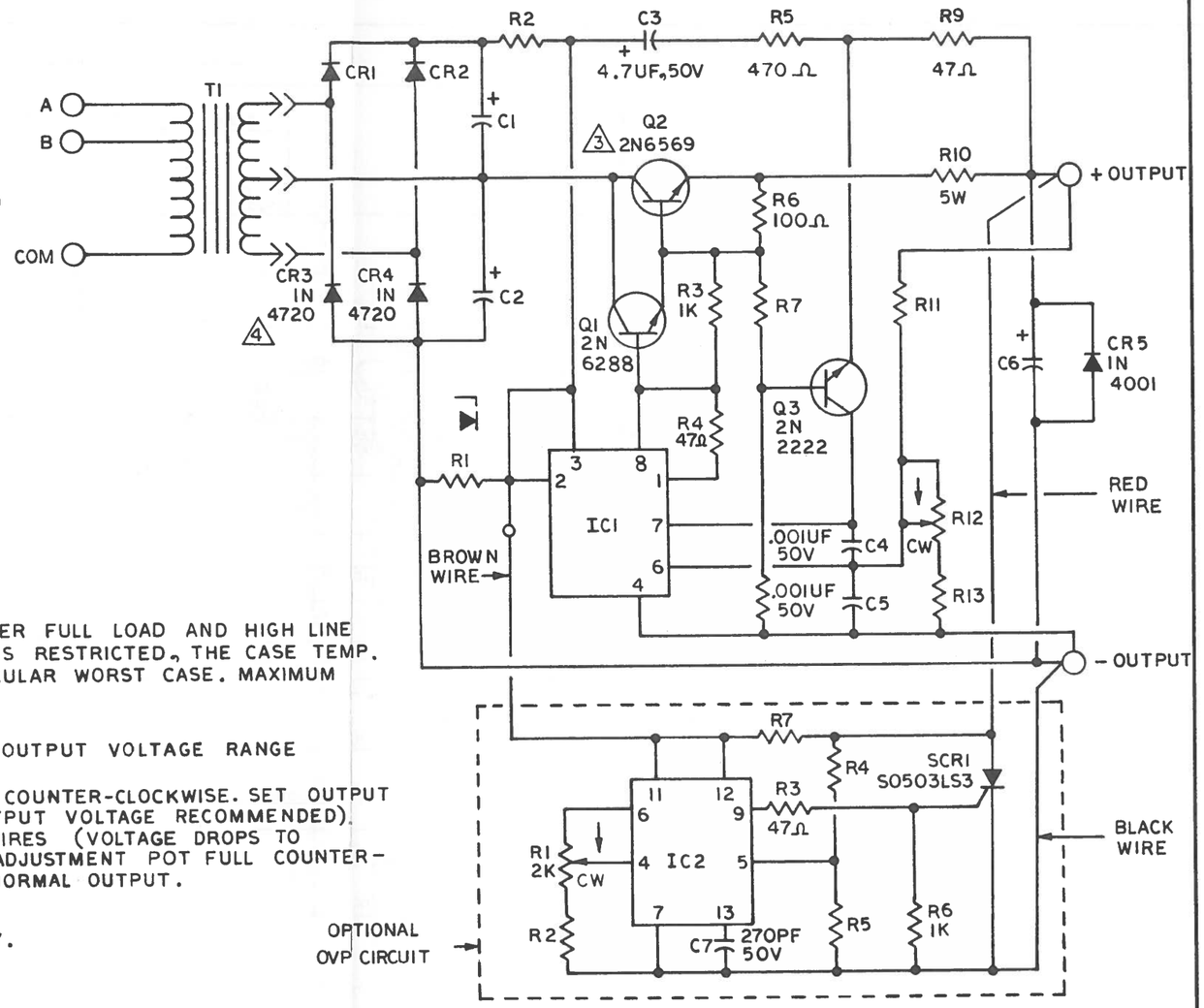

NOTES: UNLESS OTHERWISE SPECIFIED

1. ALL RESISTORS ARE 1/2 W, ±5%.
2. DERATE OUTPUT 15% FOR 50 Hz OPERATION.
3. Q2 2N3055 USED ON -24 & -28 MODELS ONLY.
4. CR3 AND CR4 ARE 60S05 ON -3,-5,-9 MODELS ONLY.

1. POWER SUPPLY IS DESIGNED FOR CONTINUOUS OPERATION UNDER FULL LOAD AND HIGH LINE CONDITIONS AT 40°C IN FREE AIR ENVIRONMENT. IF AIR FLOW IS RESTRICTED, THE CASE TEMP. OF THE Q2 TRANSISTOR SHOULD BE MONITORED UNDER PARTICULAR WORST CASE. MAXIMUM ALLOWABLE TEMP. IS 150°C.
2. RECOMMENDED EXTERNAL FUSING: .75A FOR 115V OPERATION.
3. SELECT PROPER PRIMARY TRANSFORMER TAPS FOR DESIRED OUTPUT VOLTAGE RANGE (SEE TABULATION BLOCK).
4. TO SET OPTIONAL OVP: TURN OVP ADJUSTMENT POT FULL COUNTER-CLOCKWISE. SET OUTPUT VOLTAGE TO DESIRED OVERVOLTAGE LIMIT (20% ABOVE OUTPUT VOLTAGE RECOMMENDED). TURN OVP ADJUSTMENT POT SLOWLY CLOCKWISE UNTIL SCR FIRES (VOLTAGE DROPS TO APPROXIMATELY 1 VOLT). TURN POWER OFF. TURN VOLTAGE ADJUSTMENT POT FULL COUNTER-CLOCKWISE. RE-APPLY POWER AND SET SUPPLY VOLTAGE TO NORMAL OUTPUT.

CAUTION: READ INSTRUCTIONS BEFORE OPERATING POWER SUPPLY.

TABULATION														
MODEL	INPUT TAP A	INPUT TAP B	IC1	C1	C2	C6	CR1,2	R1	R2	R7	R8	R10	R11	R12	R13
XP20-3	2-3V, 4.0A	4V, 4.0A	LM300	100UF 16V	10KUF 15V	470UF 10V	IN4001	1K	180Ω	470Ω	820Ω	.22Ω	220Ω	2K	100Ω
XP20-5	5V, 4.0A	6V, 3.3A	LM305	100UF 16V	10KUF 15V	470UF 10V	IN4001	1K	330Ω	270Ω	1.3K	.12Ω	5.6K	2K	1.8K
XP20-9	7V, 3.0A 8V, 2.9A	9V, 2.9A 10V, 2.7A	LM305	100UF 25V	5KUF 25V	220UF 16V	IN4001	2.7K	1K	220Ω	1.5K	.18Ω	12K	2K	1.8K
XP20-12	11V, 2.5A 12V, 2.4A 13V, 2.2A	14V, 2.2A 15V, 2.1A 16V, 1.9A	LM305	100UF 35V	3.6KUF 35V	220UF 25V	IN4002	8.2K	3.9K	180Ω	2.2K	.22Ω	18K	2K	1.8K
XP20-24	17&18V. 1.8 A 19&20V. 1.6 A	21&22V, 1.5A 23&24V, 1.2A	LM305A	47UF 50V	2.5KUF 50V	220UF 35V	IN4002	12K	6.8K	270Ω	3.3K	.47Ω	15K	1K	1K
XP20-28	25&26V, 1.0A 27&28V, .9A	29&30V, .8 A 31&32V, .6A	LM305A	47UF 50V	2.5KUF 50V	220UF 35V	IN4002	15K	7.5K	220Ω	5.6K	.68Ω	27K	1K	1.3K

PROPRIETARY INFORMATION
NO INFORMATION GIVEN HEREIN MAY BE DISSEMINATED TO ANY PERSON OR COMPANY WITHOUT THE EXPRESS PERMISSION OF XENTEK INC.

NUCLEAR DATA
72-1408-00
(39-7009) SHT. 3 OF 3

XENTEK INC.
SAN MARCOS CALIF.

SCALE: —
APPROVED BY:
DRAWN BY MAR
DATE: 11-6-75
REVISED 11-6-75

POWER SUPPLY SCHEMATIC
REV.A

MODEL XP20
DRAWING NUMBER C 3018-S01

17X22 PRINTED ON NO. 1000H CLEARPRINT

THIS DRAWING AND SPECIFICATION, EITHER IN PART OR WHOLE, IS THE PROPERTY OF DIGITAL EQUIPMENT CORPORATION AND SHALL NOT BE REPRODUCED OR COPIED OR USED IN WHOLE OR IN PART AS THE BASIS FOR MANUFACTURE OR SALE OF EQUIPMENT OR DEVICES WITHOUT WRITTEN PERMISSION.
COPYRIGHT © 1976 DIGITAL EQUIPMENT CORPORATION

NOTES:

NOTES:

1. ADJUST R14 SO THAT THE CPU FREQUENCY MEASURED AT E57 PIN 8 IS 2.5 MHZ ±.04MHZ. THE MODULE MAY BE OPERATED AT OTHER FREQUENCIES FOR TEST PURPOSE ONLY, SEE SHEET (K-9).
2. ADJUST R15 SO THAT THE REFRESH FREQUENCY MEASURED AT E78 PIN 8 IS 625 HZ ±3 HZ. SEE SHEET (K-9).
3. TIME DELAY FROM FALLING EDGE ON E51 PIN 9 TO FALLING EDGE ON E78 PIN 4 SHOULD BE 110 TO 140 NS. R7 MAY BE REMOVED TO INCREASE THE DELAY SLIGHTLY IF LESS THAN 110 NS IS MEASURED. SEE SHEET (K-5).
4. JUMPER FUNCTIONS AND CONFIGURATION ARE AS FOLLOWS:

JUMPER SELECT FEATURES				
JUMPER	SELECTION WHEN INSTALLED	OPTION	SHIPPING STATUS M7264(REV E)	-YA
W1	RESIDENT MEMORY BANK 1	C.O.	R	R
W2	RESIDENT MEMORY BANK 0	C.O.	I	R
W3	DISABLE EVENT LINE	C.O.	R	R
W4	DISABLE MEMORY REFRESH	C.O.	R	I
W5	POWER UP MODE SELECT	C.O.	R	R
W6	POWER UP MODE SELECT	C.O.	R	R
W7	BIASING VOLTAGE VDATA = VROM	F.O.	I	I
W8	BIASING VOLTAGE VCTL = VROM	F.O.	I	I
W9	DISABLE REPLY FROM RESIDENT MEMORY	F.O.	R	I
W10	DISABLE REPLY DURING REFRESH *	C.O.	R	R
W11	ENABLE ON BOARD MEMORY SELECT	C.O.	I	R

* INSTALLED IF RESIDENT RAM IS NOT THE SLOWEST REPLY IN THE SYSTEM.

POWER-UP MODES			
MODE	JUMPERS W6	JUMPERS W5	MODE SELECT
0	R	R	PC AT 24 AND PS AT 26, OR HALT MODE
1	R	I	ODT MICROCODE
2	I	R	PC AT 173000 FOR USER BOOT STRAP
3	I	I	SPECIAL PROCESSOR MICROCODE (not implemented)

I; INSTALLED R; REMOVED C.O; CUSTOMER OPTION F.O; FACTORY OPTION

5. COMPONENTS ARE NOT INSTALLED (RESERVED OPTION) UNLESS SPECIFICALLY INSTRUCTED.
6. DELETED FOR M7264-YA VERSION
7.

M7264	-3.9 V_{BB} FOR LSI CHIP SET, -5 V_{BB} FOR MOSTEK 4K RAM
M7264-YA	-3.9 V_{BB} FOR LSI CHIP SET, NO ON-BOARD RAM
M7264-AB	-3.9 V_{BB} FOR LSI CHIP SET, -5 V_{BB} FOR INTEL 4K RAM
M7264-BB	-5.0 V_{BB} FOR LSI CHIP SET, -5 V_{BB} FOR MOSTEK 4K RAM

8. SIGNAL DESIGNATION

XX YYY Z — Z: H (HIGH), L (LOW) WHEN ASSERTED; YYY: SIGNAL NAME; XX: SIGNAL ORIGIN (PAGE) IDENTIFIER

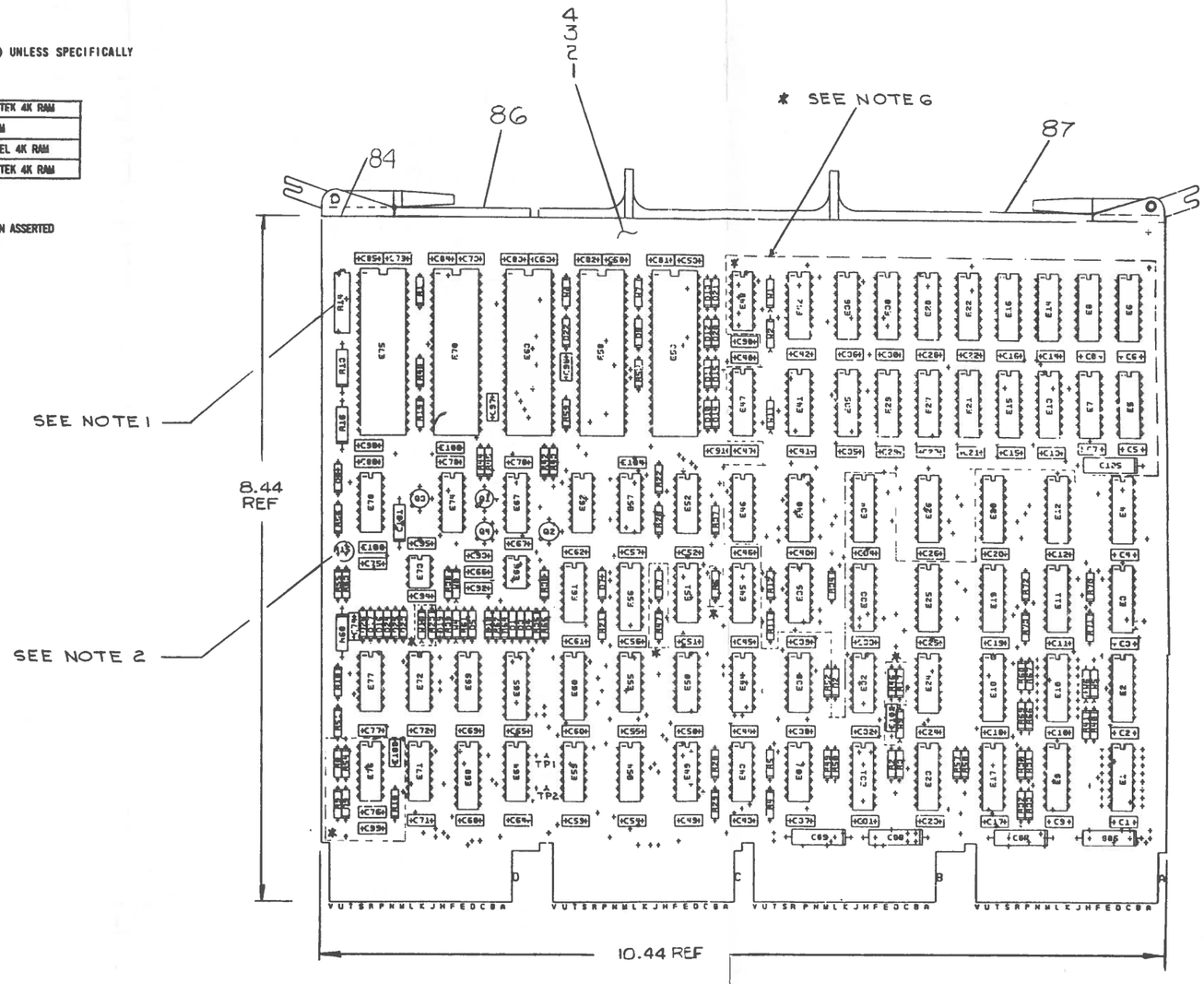

4K RAM	16	9	8
DEC MH0026	3		
DEC 75322	7	14	
DEC 7497	8	16	
DEC 8641	8	16	
DEC 745257	8	16	
DEC 745174	8	16	
DEC 745140	7	14	
DEC 74S139	8	16	
DEC 7475	12	5	
DEC 74S74	7	14	
DEC 7474	7	14	
DEC 7442	8	16	
DEC 74S11	7	14	
DEC 74S10	7	14	
DEC 8837	8	16	
DEC 74S05	7	14	
DEC 74S04	7	14	
DEC 74S00	7	14	
DEC 7400	7	14	
IC TYPE	GND	+5V	+12V

GND AND 5V ARE USUALLY PIN 7 AND 14 RESPECTIVELY EXCEPTIONS ARE STATED ABOVE

IC PIN LOCATIONS

QTY	REF. DESIGNATION	DESCRIPTION	PART NO.	ITEM NO.

FIRST USED ON OPTION MODEL

PARTS LIST

ETCH BOARD REV. E

REV.	REVISIONS	CHANGE NO.	DEC NO.	EIA NO.	DEC NO.	EIA NO.
J	M7264-00005					
	REVISED / REDRAWN					
	CHK					

SEMICONDUCTOR CONVERSION CHART

DRN.		DATE
CHK'D.		DATE 1-12-76
ENG.	Chau S Chi	DATE 1-20-76
PROJ. ENG.	[illegible]	DATE 1-20-76
PROD.	Chau S Chi	DATE 1-20-76
NEXT HIGHER ASSY		
SCALE		
SHEET 1 OF 10		

digital

TITLE: LSI 11 CPU MODULE

SIZE D | CODE CS | NUMBER M7264-0-1 | REV. J | DIST.

S70-2344-00 (Sheet 1 of 10)

"THIS DRAWING AND SPECIFICATIONS, HEREIN, ARE THE PROPERTY OF DIGITAL EQUIPMENT CORPORATION AND SHALL NOT BE REPRODUCED OR COPIED OR USED IN WHOLE OR IN PART AS THE BASIS FOR THE MANUFACTURE OR SALE OF ITEMS WITHOUT WRITTEN PERMISSION COPYRIGHT © 1976, DIGITAL EQUIPMENT CORPORATION"

QTY	QTY	QTY	QTY	REF DESIGNATION	DESCRIPTION	PART NO.	ITEM NO.
-	-	-	1	D5	DIODE, IN751A, 5.1V, 5%	1110994	43
-	-	1	-	D6	DIODE, IN751A, 5.1V, 5%	1110994	44
3	3	-	3	D2,D6,D9	DIODE, IN751A, 5.1V, 5%	1110994	45
4	4	4	4	Q1 THRU Q4	TRANSISTOR-PNP, HIGH SPEED	1512971	46
3	3	3	3	E38,E45,E72	I.C. DEC 7408	1905575	47
1	1	1	1	E24	I.C. DEC 74S08	1910532	48
3	3	3	3	E37,E59,E69	I.C. DEC 7404	1909686	49
1	1	1	1	E61	I.C. DEC 74S04	1910534	50
1	1	1	1	E51	I.C. DEC 74S05	1910535	51
1	1	1	1	E31	I.C. DEC 8837	1911116	52
-	-	1	-	E55,E62	I.C. DEC 74S10	1910536	53
3	3	-	3	E48,E55,E62	I.C. DEC 74S10	1910536	54
2	2	2	2	E32,E52	I.C. DEC 74S11	1910537	55
1	1	1	1	E58	I.C. DEC 7442	1910046	56
5	5	5	5	E43,E44,E49,E64,E71	I.C. DEC 7474	1905547	57
3	3	3	3	E50,E54,E57	I.C. DEC 74S74	1910544	58
4	4	-	4	E26,E40,E42,E47	I.C. DEC 7475	1909050	59
1	1	1	1	E56	I.C. DEC 74S139	1911876	60
2	2	-	2	E39,E77	I.C. DEC 74S140	1910546	61
-	-	1	-	E77	I.C. DEC 74S140	1910546	62
1	1	1	1	E60	I.C. DEC 74S174	1910550	63
7	7	-	7	E2,E4,E12,E20,E34,E41,E45	I.C. DEC 74S257	1911641	64
-	-	5	-	E2,E4,E12,E20,E34	I.C. DEC 74S257	1911641	65
1	1	-	1	E76	I.C. DEC 75107	1910268	66
7	7	7	7	E3,E11,E17,E18,E19,E23,E33	I.C. DEC 8641	1911579	67
1	1	1	1	E65	I.C. DEC 7497	1911195	68
1	1	1	1	E78	I.C. DEC MC4024	1911038	69
2	2	2	2	E67,E74	I.C. DEC 75322	1912955	70
2	2	2	2	E66,E73	I.C. DEC MH8826	1912098	71
-	16	-	-	E5 THRU E8,E13 THRU E16, E21,E22,E27 THRU E30,R35, C38	I.C. DEC 4K, RAM, -5VBB	2112958-01	72
16	-	-	16	E5 THRU E8,E13 THRU E16, E21,E22,E27 THRU E30,E35, E36	I.C. DEC 4K, RAM, -5VBB	2112726-00	73
-	-	-	1	E53	I.C. DEC CP1611B-51	2111549-	74
-	-	-	1	E58	I.C. DEC CP1621B451	23001C2-01	75
-	-	-	1	E63	I.C. DEC CP1631B-3810	23088A5-01	76
-	-	-	1	E70	I.C. DEC CP1631B-3807	23087A5-01	77
1	1	1	-	E52	I.C. DEC CP1611B-39	2111549-01	78
1	1	1	-	E50	I.C. DEC CP1621B439	23001C3-	79
1	1	1	-	E63	I.C. DEC CP1631B103	2300185-	80
1	1	1	-	E70	I.C. DEC CP1631B073	2300285-	81
20	20	-	20	W1 THRU W6,W9,W10,W11,TP1, TP2	PIN STAKING	9009149	82
-	-	12		W3 THRU W6,W9,TP1,TP2	PIN STAKING	9009149	83
8	8	8	8		EYELET GS4 - 7	9006732	84
2	2	2	2	W7,W8	JUMPER, INSULATED	9009185	85
1	1	1	1		HANDLE, LEFT	7413826-00	86
1	1	1	1		HANDLE, RIGHT	7413826-01	87
5	5	5	5	E53,E58,E63,E70,E75	SOCKET 40 PIN	1212385-01	88

M7264 M7264-AB M7264-YA M7264-BB

QTY	QTY	QTY	QTY	REF DESIGNATION	DESCRIPTION	PART NO.	ITEM NO.
REF	REF	REF	REF		X-Y COORDINATE HOLE LOCATION	K-CO-M7264-B-4	1
REF	REF	REF	REF		ASSY/DRILLING HOLE LAYOUT	D-AH-M7264-B-5	2
REF	REF	REF	REF		MODULE ECO HISTORY	B-MH-M7264-B-6	3
1	1	1	1		ETCHED CIRCUIT BOARD	5011545	4
1	1	-	1	C100	CAPACITOR, 12pf, 100V, 5%	1002087	5
1	1	1	1	C104	CAPACITOR, 68pf, 100V, 5%	1000014	6
1	1	-	1	C103	CAPACITOR, 220pf, 100V, 1%	1012121	7
1	1	-	1	C102	CAPACITOR, 680pf, 100V, 5%	1000026	8
57	57	-	57	C1 THRU C4,C9 THRU C12,C17 THRU C20,C23 THRU C26,C31 THRU C34,C37 THRU C52,C54 THRU C57,C59 THRU C62,C64, C65,C99,C68,C69,C71,C72,C105 C76,C77,C80,C96,C97,	CAPACITOR, .01uf, 50V, 10%	1001610	9
-	-	52	-	C1 THRU C4,C9 THRU C12,C17 THRU C20,C23 THRU C26,C31 THRU C34,C37,C38,C39,C43 THRU C52,C54 THRU C57,C59 THRU C62,C64,C65,C97,C68, C69,C71,C72,C105,C77,C80,C96	CAPACITOR, .01uf, 50V, 10%	1001610	10
1	1	1	1	C101	CAPACITOR, .33uf, 50V, 10% POLYCARB	1010031-4	11
39	39	-	39	C5 THRU C8,C13 THRU C16,C21 C22,C27 THRU C30,C35,C36, C53,C58,C63,C66,C70,C73,C74 C78,C79,C81 THRU C85,C90 THRU C95,C98,C67,C75	CAPACITOR, .47uf, 25V, 20%	1010279	12
-	-	23	-	C53,C58,C63,C66,C70,C73,C74 C78,C79,C81 THRU C85,C90 THRU C95,C98,C67,C75	CAPACITOR, .47uf, 25V, 20%	1010279	13
5	5	-	5	C86 THRU C89,C105	CAPACITOR, 15uf, 20V, 10%	1004812	14
-	-	4	-	C86 THRU C89	CAPACITOR, 15uf, 20V, 10%	1004812	15
2	2	2	2	E9,E25	RESISTOR NTWK,14-330,14-680	1311003-02	16
3	3	-	3	R11,R12,R45	RESISTOR, 10 OHM, 1/4W, 5%	1301317	17
-	-	1	-	R45	RESISTOR, 10 OHM, 1/4W, 5%	1301317	18
3	3	3	3	R42,R43,R44	RESISTOR, 22 OHM, 1/4W, 5%	1301969	19
4	4	4	4	R35,R62,R64,R65	RESISTOR, 33 OHM, 1/4W, 5%	1300197	20
1	1	-	1	R9	RESISTOR, 38.3 OHM, RN55, 1%	1305121	21
1	1	-	1	R54	RESISTOR, 270 OHM, 1/4 W, 5%	1301972	22
3	3	3	3	R13,R16,R60	RESISTOR 56 OHM, 1/2W, 5%	1309995	23
2	2	2	2	R36,R61	RESISTOR, 100 OHM, 1/4W, 5%	1300229	24
2	2	-	2	R8,R10	RESISTOR, 133 OHM, RN55, 1%	1303038	25
1	1	1	1	R21	RESISTOR, 150 OHM, 1/4W, 5%	1300250	26
12	12	12	12	R2,R4,R28,R30,R32,R49,R58, R66,R68,R70,R72,R37	RESISTOR, 330 OHM, 1/4W, 5%	1300295	27
16	16	-	16	R3,R5,R6,R20,R23,R29,R31, R33,R50,R51,R52,R57,R67,R69 R71,R73	RESISTOR, 680 OHM, 1/4W, 5%	1301424	28
-	-	14	-	R3,R5,R20,R29,R31,R33,R50, R51,R52,R57,R67,R69,R71,R73	RESISTOR, 680 OHM, 1/4W, 5%	1301424	29
1	1	-	1	R47	RESISTOR, 909 OHM, RN55, 1%	1302685	30
1	1	-	1	R34	RESISTOR, 1K, 1/4W, 5%	1300365	31
-	-	1	-	R34	RESISTOR, 1K, 1/4W, 5%	1300365	32
1	1	-	1	R17	RESISTOR, 1.2K, 1/4W, 5%	1301320	33
10	10	10	10	R1,R18,R19,R22,R38 THRU R41,R48,R56	RESISTOR, 2K, 1/4W, 5%	1302388	34
1	1	1	1	R15	POT, 2K, 1/2W, 10%	1309150-07	35
1	1	1	1	R14	POT, 5K, 1/2W, 10%	1309143-09	36
1	1	-	1	R46	RESISTOR, 5.11K, RN55, 1%	1304854	37
1	1	-	1	R7	RESISTOR, 6.8K, 1/4W, 5%	1301423	38
2	2	-	2	W2,W11	WIRE, SOLID INS. #30 AWG	9105740	39
-	-	2	-	W4,W9	WIRE, SOLID INS. #30 AWG	9105740	40
1	1	1	-	D5	DIODE, IN748A,3.9V, 5%	1100122	41
20	20	20	20	D1,D3,D4,D7,D10 THRU D21, D23,D24,D25,D26	DIODE, D664	1100114	42

M7264 M7264-AB M7264-YA M7264-BB

REVISIONS		
CHK	CHANGE NO	REV

TITLE: LSI-11 CPU MODULE
SIZE: D | CODE: CS | NUMBER: M7264-0-1 | REV: J
SCALE: — | SHEET 2 OF 10 | DIST:

J D CS M7264-0-1

"THIS DRAWING AND SPECIFICATIONS, HEREIN, ARE THE PROPERTY OF DIGITAL EQUIPMENT CORPORATION AND SHALL NOT BE REPRODUCED OR COPIED OR USED IN WHOLE OR IN PART AS THE BASIS FOR THE MANUFACTURE OR SALE OF ITEMS WITHOUT WRITTEN PERMISSION.
COPYRIGHT © 1975 DIGITAL EQUIPMENT CORPORATION"

PREFIX "K2" APPLIES TO ALL WDAL, WMIB } SIGNALS

K9 -V DATA (SEE NOTE 4) W7 K9 -VROM

C81 .47µf

C84 .47

K9 RPH 3H
K9 RPH 1H
K9 +12 VA

CPI611B E53 DATA CHIP

WDAL 00 H
WDAL 01 H
WDAL 02 H
WDAL 03 H
WDAL 04 H
WDAL 05 H
WDAL 06 H
WDAL 07 H
WDAL 08 H
WDAL 09 H
WDAL 10 H
WDAL 11 H
WDAL 12 H
WDAL 13 H
WDAL 14 H
WDAL 15 H

WMIB 00 L
WMIB 01 L
WMIB 02 L
WMIB 03 L
WMIB 04 L
WMIB 05 L
WMIB 06 L
WMIB 07 L
WMIB 08 L
WMIB 09 L
WMIB 10 L
WMIB 11 L
WMIB 12 L
WMIB 13 L
WMIB 14 L
WMIB 15 L

+5V
R1 2K
R22 2K
K2 MSTB L
K2 MCOMP H

+5V
R19 2K
R18 2K
K2 MCKD L
K2 MCK L

E75 J1

WMIB 15 L
WMIB 14 L
WMIB 13 L
WMIB 12 L
WMIB 17 L
WMIB 16 L
WMIB 18 L
WMIB 19 L
WMIB 20 L
WMIB 21 L

WMIB 00 L
WMIB 01 L
WMIB 02 L
WMIB 03 L
WMIB 04 L
WMIB 05 L
WMIB 06 L
WMIB 07 L
WMIB 08 L
WMIB 09 L
WMIB 10 L
WMIB 11 L

+5V
R48 2K
K2 MROM DISABLE L

+5V
K9 RPH 2H
K9 RPH 4 H

C85 .47µf
K9 -VRCLK

WAIT H
K9 -VCTL (SEE NOTE 4) W8 K9 -VROM

C82 .47µf

C83 .47µf

K9 RPH3 H
K9 RPH1 H
K9 +12VA

CPI621B E58 CONTROL CHIP

K6 ICIRQ (1) H
K6 EVIRQ (1) H
K6 IPIRQ (1) H
K6 RPIRQ (1) H
K6 BUSY H
K2 MCOMP H
K6 RESET (1) L
K7 REPLY H
K2 WDOUT H
K2 WWB H
K2 WIAK H
K2 WSYNC H
K2 WDIN H

I3
I2
I1
I0

WMIB 00 L
WMIB 01 L
WMIB 02 L
WMIB 03 L
WMIB 04 L
WMIB 05 L
WMIB 06 L
WMIB 07 L
WMIB 08 L
WMIB 09 L
WMIB 10 L
WMIB 11 L
WMIB 12 L
WMIB 13 L
WMIB 14 L
WMIB 15 L

CPI631 B E63 ROM CHIP 1

WMIB 15 L
WMIB 14 L
WMIB 13 L
WMIB 12 L
WMIB 17 L
WMIB 16 L
WMIB 18 L
WMIB 19 L
WMIB 20 L
WMIB 21 L

WMIB 00 L
WMIB 01 L
WMIB 02 L
WMIB 03 L
WMIB 04 L
WMIB 05 L
WMIB 06 L
WMIB 07 L
WMIB 08 L
WMIB 09 L
WMIB 10 L
WMIB 11 L

K2 MROM DISABLE L

CPI631 B E70 ROM CHIP 2

WMIB 15 L
WMIB 14 L
WMIB 13 L
WMIB 12 L
WMIB 18 L
WMIB 19 L
WMIB 20 L
WMIB 21 L

WMIB 00 L
WMIB 01 L
WMIB 02 L
WMIB 03 L
WMIB 04 L
WMIB 05 L
WMIB 06 L
WMIB 07 L
WMIB 08 L
WMIB 09 L
WMIB 10 L
WMIB 11 L

K2 MROM DISABLE L

+5V
K9 RPH 2H
K9 RPH 4 H

REVISIONS

CHK	CHANGE NO.	REV.

TITLE	SIZE	CODE	NUMBER	REV.
LSI-11 CPU MODULE (K2)	D	CS	M7264-0-1	J
SCALE —	SHEET 3 OF 10	DIST.		

S70-2344-00 (Sheet 3 of 10)

"THIS DRAWING AND SPECIFICATIONS, HEREIN, ARE THE PROPERTY OF DIGITAL EQUIPMENT CORPORATION AND SHALL NOT BE REPRODUCED OR COPIED OR USED IN WHOLE OR IN PART AS THE BASIS FOR THE MANUFACTURE OR SALE OF ITEMS WITHOUT WRITTEN PERMISSION.
COPYRIGHT © 1975 DIGITAL EQUIPMENT CORPORATION"

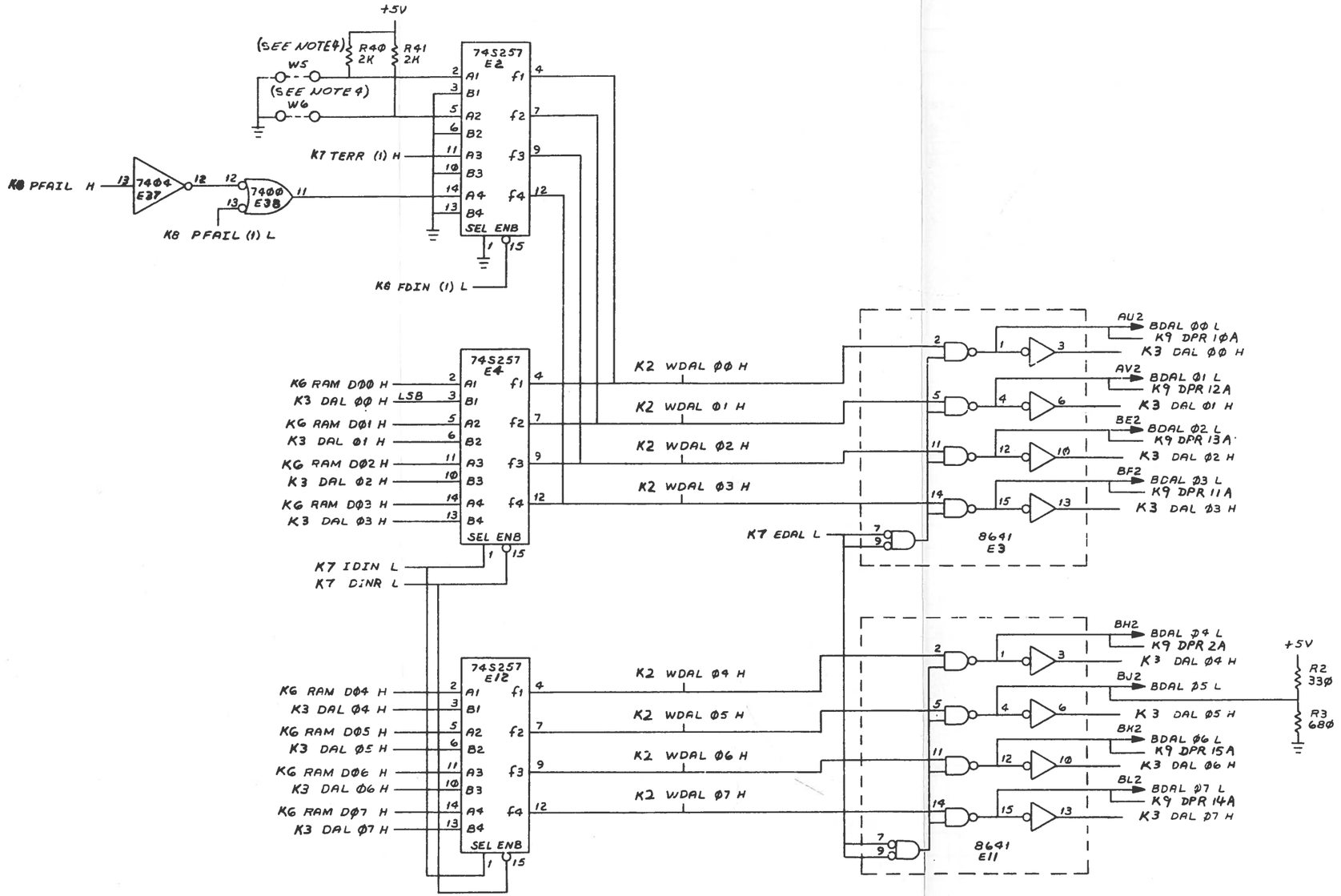

REVISIONS		
CHK	CHANGE NO.	REV.

TITLE	SIZE	CODE	NUMBER	REV.
LSI-11 CPU MODULE (K3)	D	CS	M7264-0-1	J
SCALE — SHEET 4 OF 10	DIST.			

"THIS DRAWING AND SPECIFICATIONS, HEREIN, ARE THE PROPERTY OF DIGITAL EQUIPMENT CORPORATION AND SHALL NOT BE REPRODUCED OR COPIED OR USED IN WHOLE OR IN PART AS THE BASIS FOR THE MANUFACTURE OR SALE OF ITEMS WITHOUT WRITTEN PERMISSION.
COPYRIGHT © 1975 DIGITAL EQUIPMENT CORPORATION"

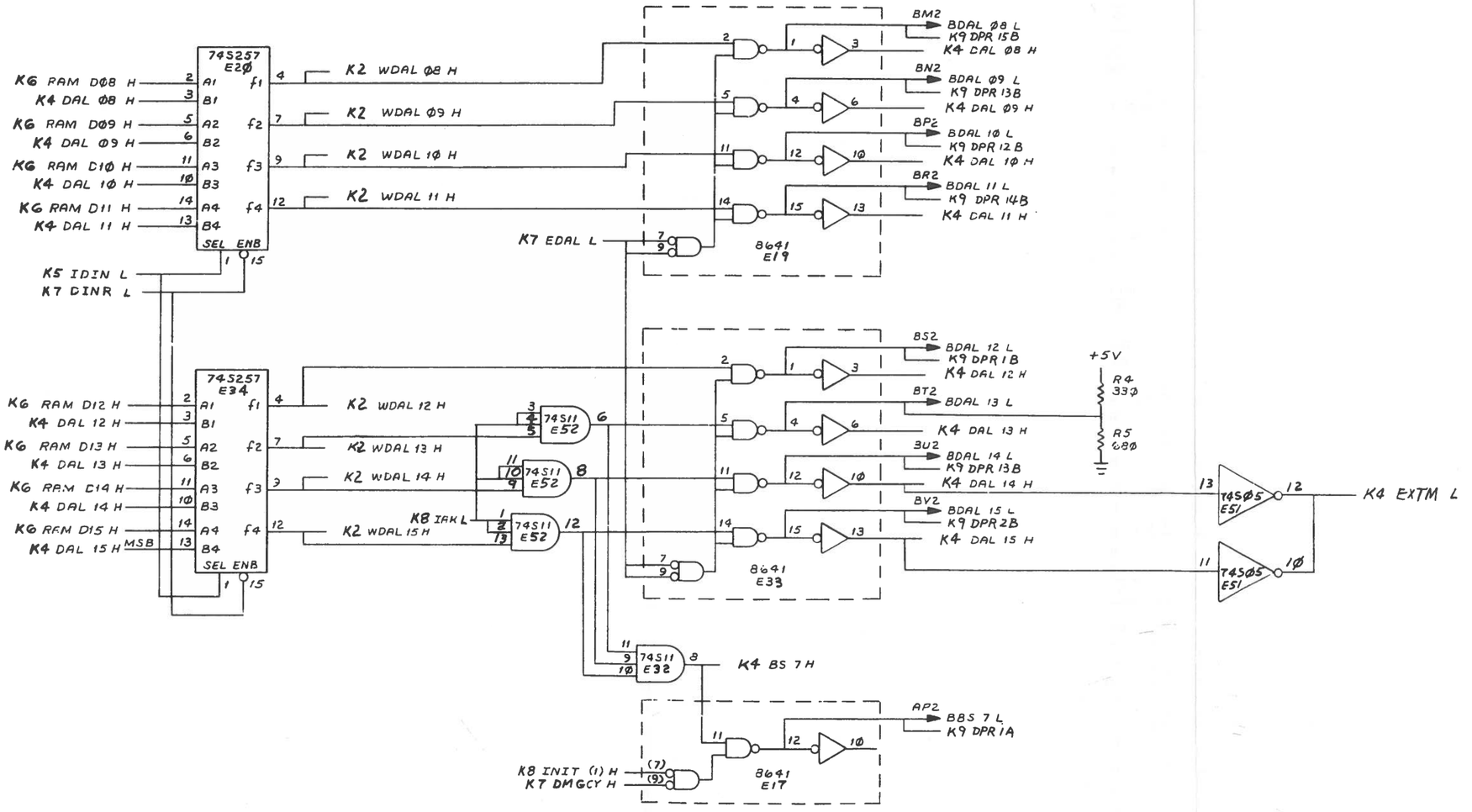

REVISIONS		
CHK	CHANGE NO.	REV.

TITLE	SIZE	CODE	NUMBER	REV.
LSI-11 CPU MODULE (K4)	D	CS	M7264-Ø-1	J
SCALE — SHEET 5 OF 10	DIST.			

DEC FORM NO. BRD 139

S70-2344-00 (Sheet 5 of 10)

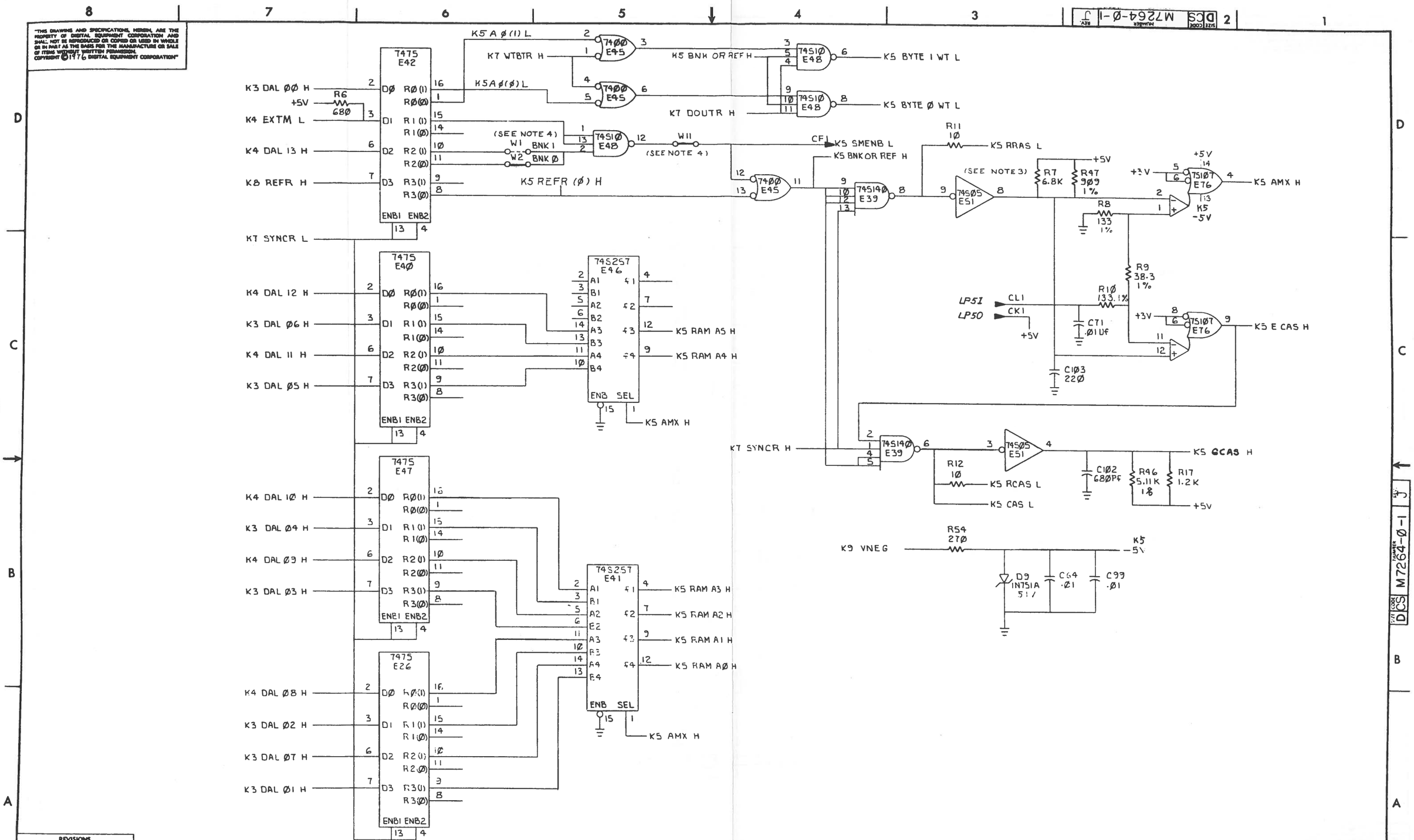

CIRCUIT SCHEMATIC ON THIS SHEET IS DELETED FOR "YA" VERSION

REVISIONS		
CHK	CHANGE NO.	REV.

TITLE	SIZE	CODE	NUMBER	REV.
LSI-11 CPU MODULE (K5)	D	CS	M7264-Ø-1	J
SCALE	SHEET 6 OF 10	DIST.		

S70-2344-00 (Sheet 6 of 10)

"THIS DRAWING AND SPECIFICATIONS, HEREIN, ARE THE PROPERTY OF DIGITAL EQUIPMENT CORPORATION AND SHALL NOT BE REPRODUCED OR COPIED OR USED IN WHOLE OR IN PART AS THE BASIS FOR THE MANUFACTURE OR SALE OF ITEMS WITHOUT WRITTEN PERMISSION.
COPYRIGHT © 1976 DIGITAL EQUIPMENT CORPORATION"

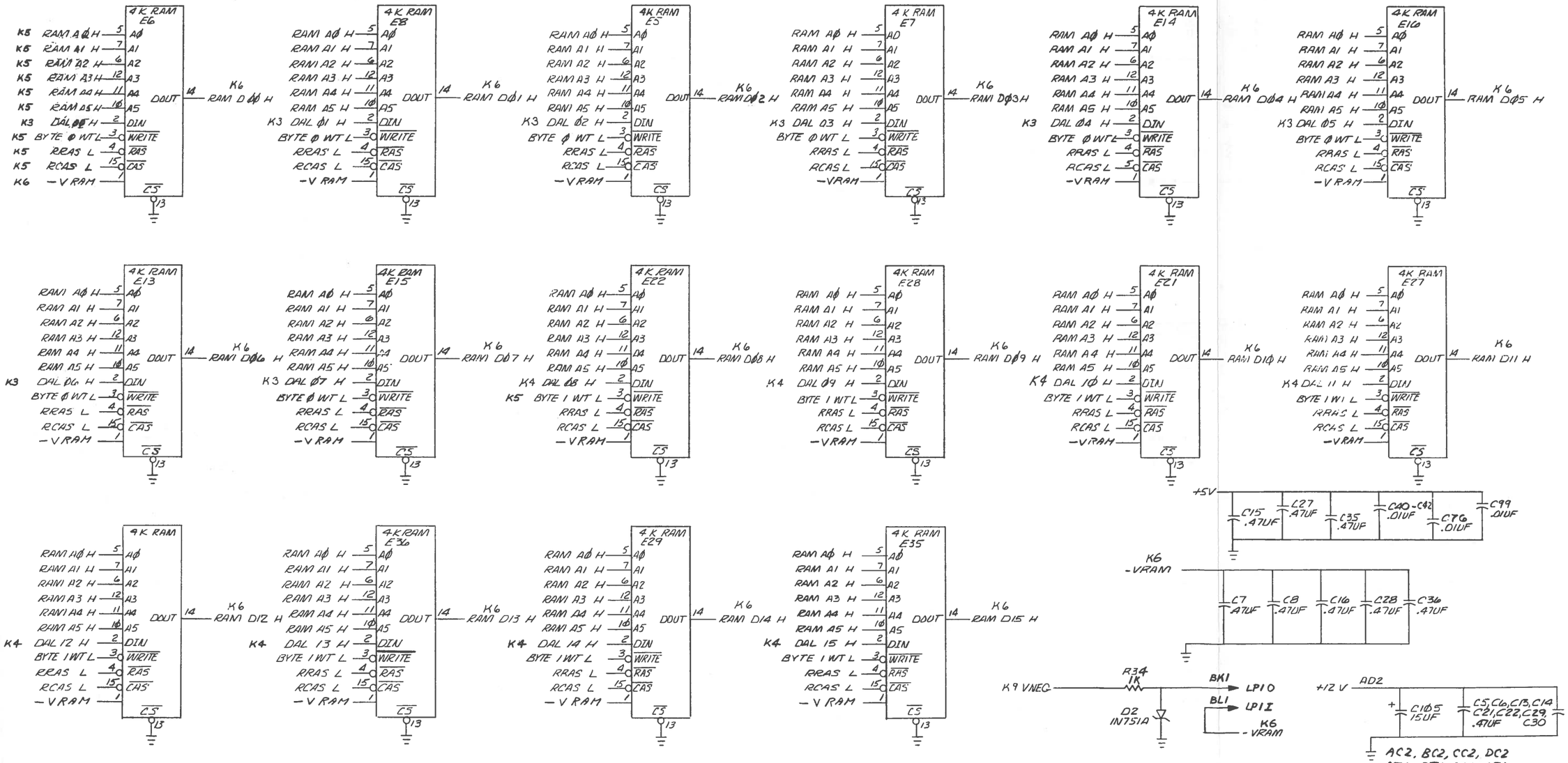

CIRCUIT SCHEMATIC ON THIS SHEET IS DELETED FOR "YB" VERSION

REVISIONS		
CHK	CHANGE NO.	REV.

TITLE	LSI-11 CPU MODULE (K6)		
SCALE	SHEET 7 OF 10	SIZE D CODE DCS	NUMBER M7264-0-1 REV J
		DIST.	

DEC FORM NO. 40 135

"THIS DRAWING AND SPECIFICATIONS, HEREIN, ARE THE PROPERTY OF DIGITAL EQUIPMENT CORPORATION AND SHALL NOT BE REPRODUCED OR COPIED OR USED IN WHOLE OR IN PART AS THE BASIS FOR THE MANUFACTURE OR SALE OF ITEMS WITHOUT WRITTEN PERMISSION. COPYRIGHT © 1976 DIGITAL EQUIPMENT CORPORATION"

7497 E65
+3V
E1 E2 E4 E8 E16 E32
U/C Z Y EN/OUT
CLK STB CLR EN
K9 PH 3 H
K7 REPLY (I) H
K7 TERR L
K7 TERR (I) H
KB INIT (I) L
K8 TF CLR L
74S10 E55

K7 DIN L
K8 DOUT D (I) L
74S00 E24
7404 E69
+5V
R52 68Ø
74S11 E32
K7 REPLY H

+3V
K7 RPLYR H
74S74 E50
K7 REPLY (I) H
K7 REPLY (I) L
K9 PH 1 H
K8 INIT (I) L
K2 WDOUT H
74S10 E55
+3V
K7 DOUT (I) H
K7 DOUT (I) L
74S74 E50
K9 PH 3 H
K7 SYNC H
8641 E18
AE2
BDOUT L
K9 DPR 7B
K7 DOUTR H

AK2
BWTBT L
K9 DPR 10B
K2 WWB H
K8 INIT (I) H
8641 E18
K7 WTBTR H

R57 R58 R67 R66 R69 R68 R71 R70 R73 R72
68Ø 33Ø
BP1 AC1 AD1 AA1 AB1
+5V

+5V
R49 33Ø
BSACK L
BN1
R50 68Ø
8837 E31
7404 E37
K7 SACK R L

K8 REF (I) L
K8 RFREQ (I) L
74S10 E62
7474 E44
K7 RFCY (I) L
K7 SYNC L

K7 DMGCY H
K7 DINR H
K5 BNK OR REF H
74S10 E55
74S11 E32
K7 EDAL L
K8 DMG (I) L
7400 E38
7404 E37
7400 E38
K7 DIN L
K2 WDIN H
7404 E37
7404 E37
K7 DIN H

AH2
BDIN L
K9 DPR 4B
K7 DINR H
K8 INIT (I) H
8641 E18
FDIN (I) L
74S00 E24
K7 DINR L

K7 REPLY (I) H
7400 E72
TP1
K7 SYNC H
AJ2
BSYNC L
K9 DPR 6A
K2 WSYNC H
7404 E59
7404 E59
K7 SYNC L
74S74 E54
K9 PH 3 L
K8 IAK L
K8 INT (I) H
8641 E18
K7 SYNC R H
74S140 E77
K7 SYNCR L

+5V
(SEE NOTE 4)
R23 68Ø
K5 REFR (Ø) H
W10
K7 DINR H
K5 GCAS H
74S10 E62
K7 IDIN L
74S00 E24
AF2
BRPLY L
K9 DPR 11B
K7 RPLYR H
(SEE NOTE 4)
W9
K7 DOUTR H
74S00 E24
8641 E23

REVISIONS		
CHK	CHANGE NO.	REV.

TITLE	SIZE	CODE	NUMBER	REV.
LSI-11 CPU MODULE (K7)	D	DCS	M7264-Ø-1	J
SCALE 1/1 SHEET 8 OF 10	DIST.			

S70-2344-00 (Sheet 8 of 10)

"THIS DRAWING AND SPECIFICATIONS, HEREIN, ARE THE PROPERTY OF DIGITAL EQUIPMENT CORPORATION AND SHALL NOT BE REPRODUCED OR COPIED OR USED IN WHOLE OR IN PART AS THE BASIS FOR THE MANUFACTURE OR SALE OF ITEMS WITHOUT WRITTEN PERMISSION. COPYRIGHT ©1976 DIGITAL EQUIPMENT CORPORATION"

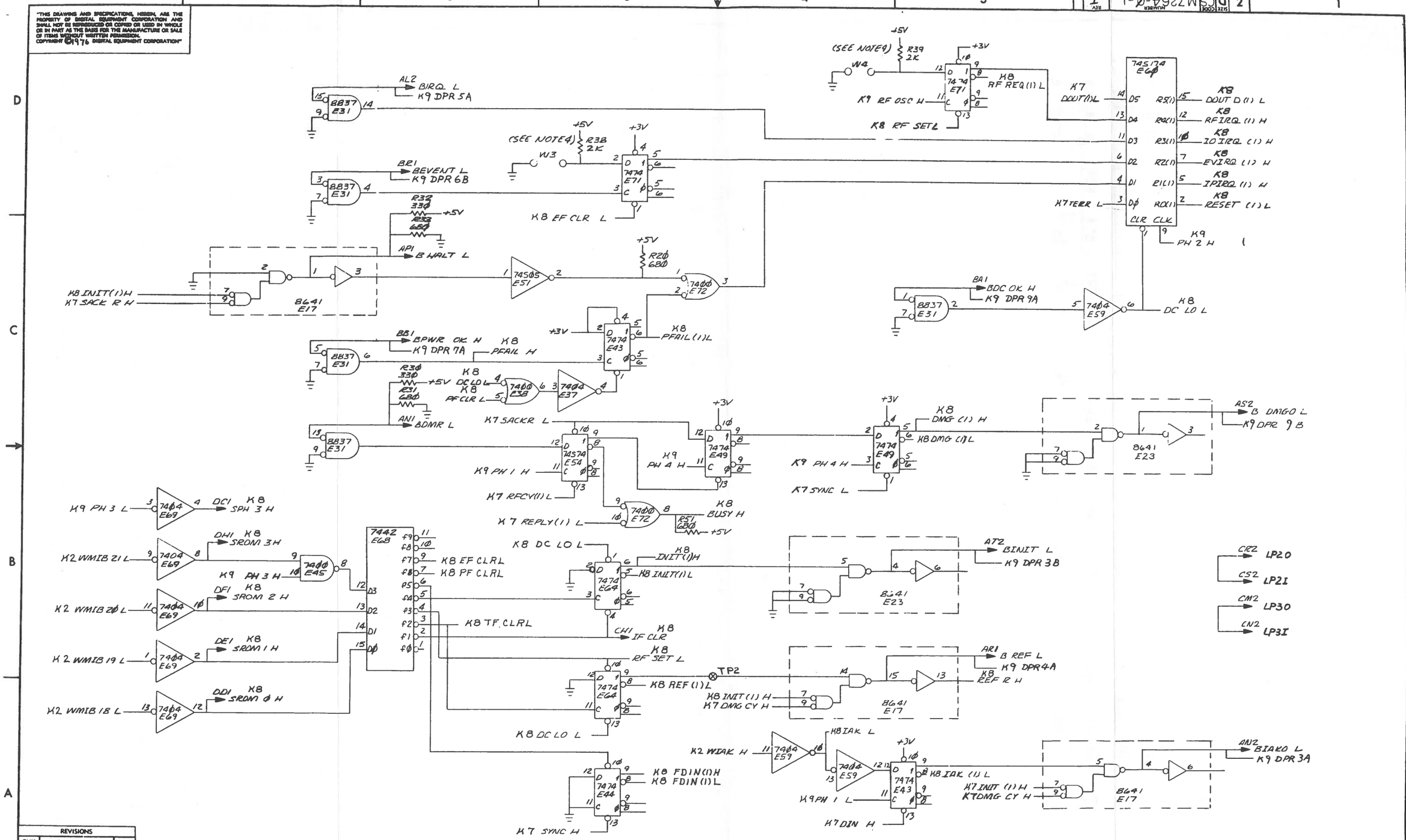

REVISIONS		
CHK	CHANGE NO.	REV.

TITLE	SIZE	CODE	NUMBER	REV.
LSI-11 CPU MODULE (K8)	D	CS	M7264-Ø-1	J
SCALE -/-	SHEET 9 OF 10	DIST.		

DEC FORM NO. DRD 138

S70-2344-00 (Sheet 9 of 10)

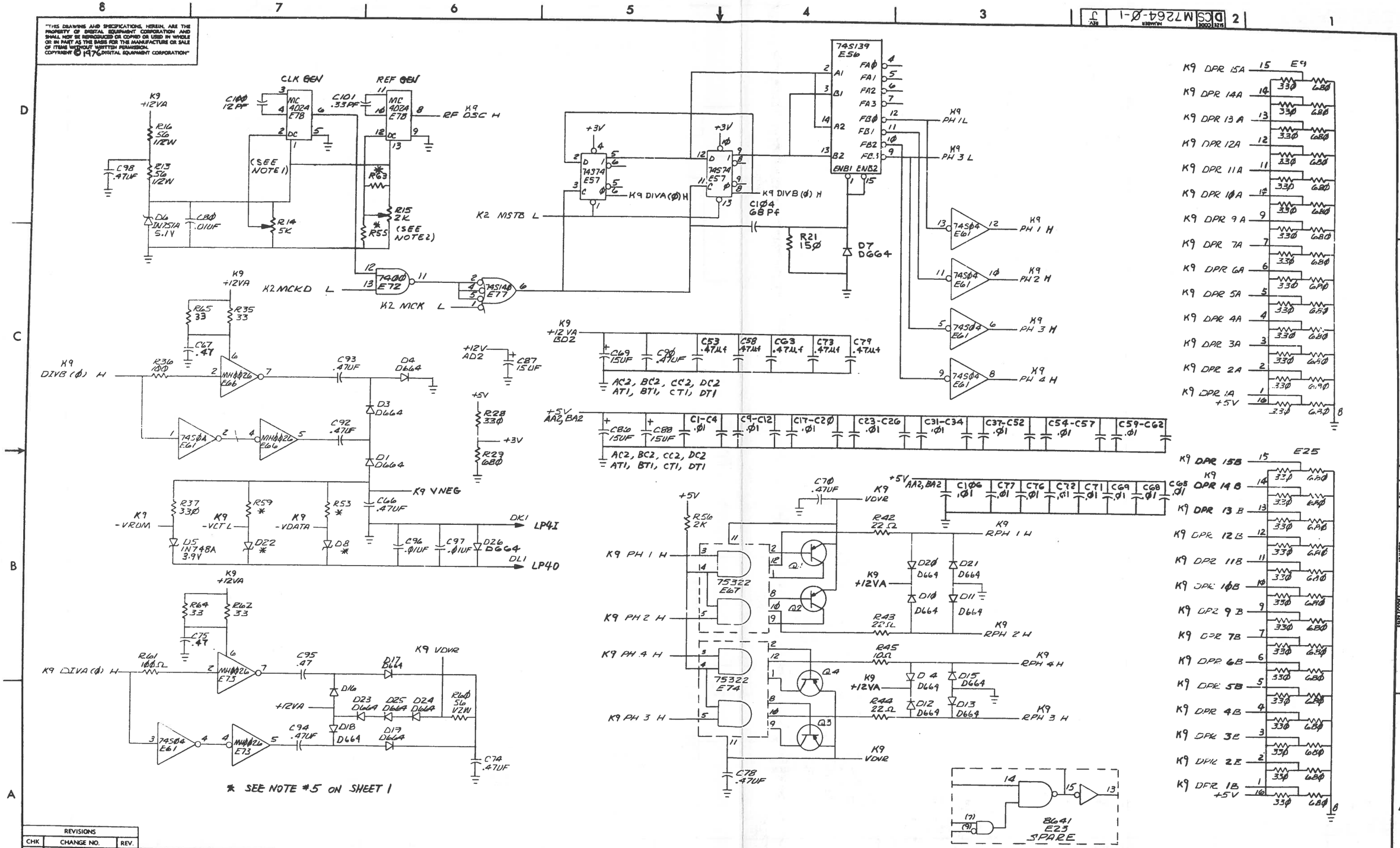

"THIS DRAWING AND SPECIFICATIONS, HEREIN, ARE THE PROPERTY OF DIGITAL EQUIPMENT CORPORATION AND SHALL NOT BE REPRODUCED OR COPIED OR USED IN WHOLE OR IN PART AS THE BASIS FOR THE MANUFACTURE OR SALE OF ITEMS WITHOUT WRITTEN PERMISSION. COPYRIGHT © 1976 DIGITAL EQUIPMENT CORPORATION"

REVISIONS		
CHK	CHANGE NO.	REV.

TITLE	SIZE	CODE	NUMBER	REV.
LSI-11 CPU MODULE (K9)	D	CS	M7264-Ø-1	J
SCALE —	SHEET 10 OF 10		DIST.	

DEC FORM NO. DRD 138

S70-2344-00 (Sheet 10 of 10)

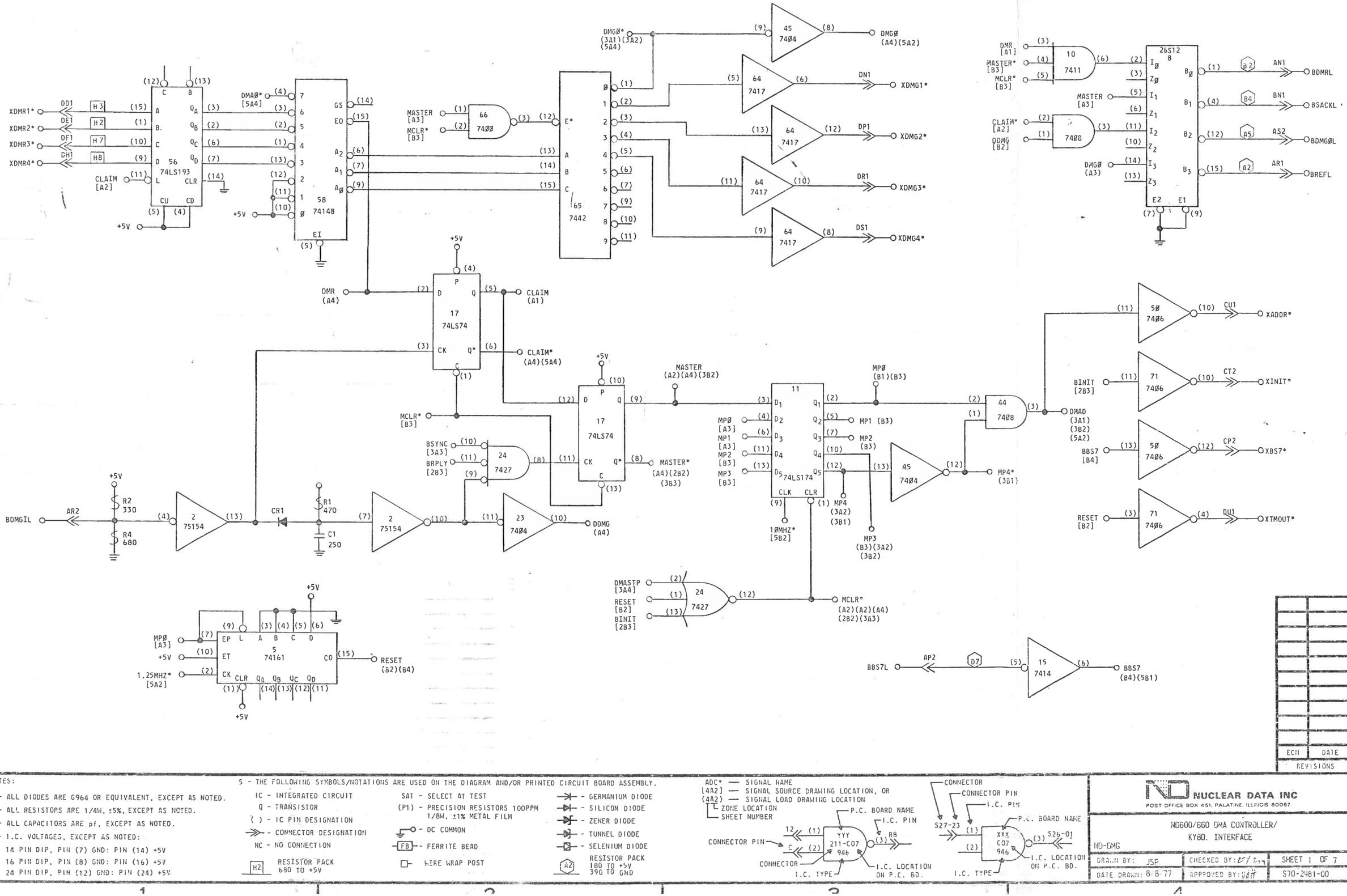

ECN	DATE

REVISIONS

NOTES:

1 - ALL DIODES ARE G964 OR EQUIVALENT, EXCEPT AS NOTED.
2 - ALL RESISTORS ARE 1/4W, ±5%, EXCEPT AS NOTED.
3 - ALL CAPACITORS ARE pf, EXCEPT AS NOTED.
4 - I.C. VOLTAGES, EXCEPT AS NOTED:
14 PIN DIP, PIN (7) GND: PIN (14) +5V
16 PIN DIP, PIN (8) GND: PIN (16) +5V
24 PIN DIP, PIN (12) GND: PIN (24) +5V

5 - THE FOLLOWING SYMBOLS/NOTATIONS ARE USED ON THE DIAGRAM AND/OR PRINTED CIRCUIT BOARD ASSEMBLY.

IC - INTEGRATED CIRCUIT
Q - TRANSISTOR
( ) - IC PIN DESIGNATION
- CONNECTOR DESIGNATION
NC - NO CONNECTION
H2 RESISTOR PACK 680 TO +5V
SAT - SELECT AT TEST
(P1) - PRECISION RESISTORS 100PPM 1/8W, ±1% METAL FILM
- DC COMMON
FB - FERRITE BEAD
- WIRE WRAP POST
- GERMANIUM DIODE
- SILICON DIODE
- ZENER DIODE
- TUNNEL DIODE
- SELENIUM DIODE
A2 RESISTOR PACK 180 TO +5V 390 TO GND

ADC* — SIGNAL NAME
[4A2] — SIGNAL SOURCE DRAWING LOCATION, OR
(4A2) — SIGNAL LOAD DRAWING LOCATION
ZONE LOCATION
SHEET NUMBER

NUCLEAR DATA INC
POST OFFICE BOX 451, PALATINE, ILLINOIS 60067

ND600/660 DMA CONTROLLER/ KY8D. INTERFACE

ND-DMG		
DRAWN BY: JSP	CHECKED BY:	SHEET 1 OF 7
DATE DRAWN: 8/8/77	APPROVED BY:	S70-2481-00

PENDING ECN

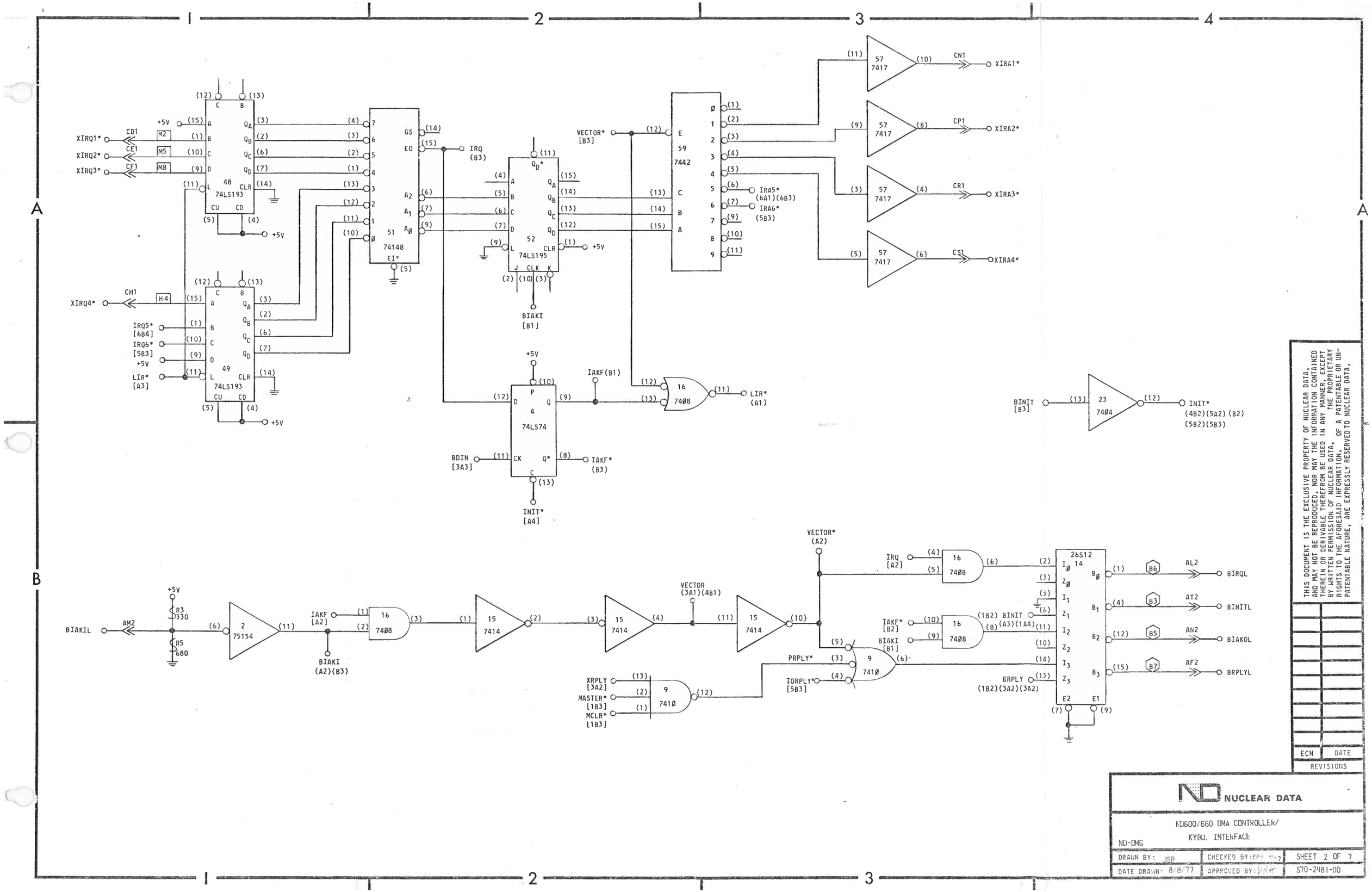

THIS DOCUMENT IS THE EXCLUSIVE PROPERTY OF NUCLEAR DATA, AND MAY NOT BE REPRODUCED, NOR MAY THE INFORMATION CONTAINED THEREIN OR DERIVABLE THEREFROM BE USED IN ANY MANNER, EXCEPT BY WRITTEN PERMISSION OF NUCLEAR DATA, THE PROPRIETARY RIGHTS TO THE AFORESAID INFORMATION, OF A PATENTABLE OR UNPATENTABLE NATURE, ARE EXPRESSLY RESERVED TO NUCLEAR DATA.

ECN	DATE
REVISIONS	

NUCLEAR DATA

ND600/660 DMA CONTROLLER/
KY8U. INTERFACE

ND-DMG

DRAWN BY: JSP	CHECKED BY: [illegible]	SHEET 2 OF 7
DATE DRAWN: 8/8/77	APPROVED BY: [illegible]	S70-2481-00

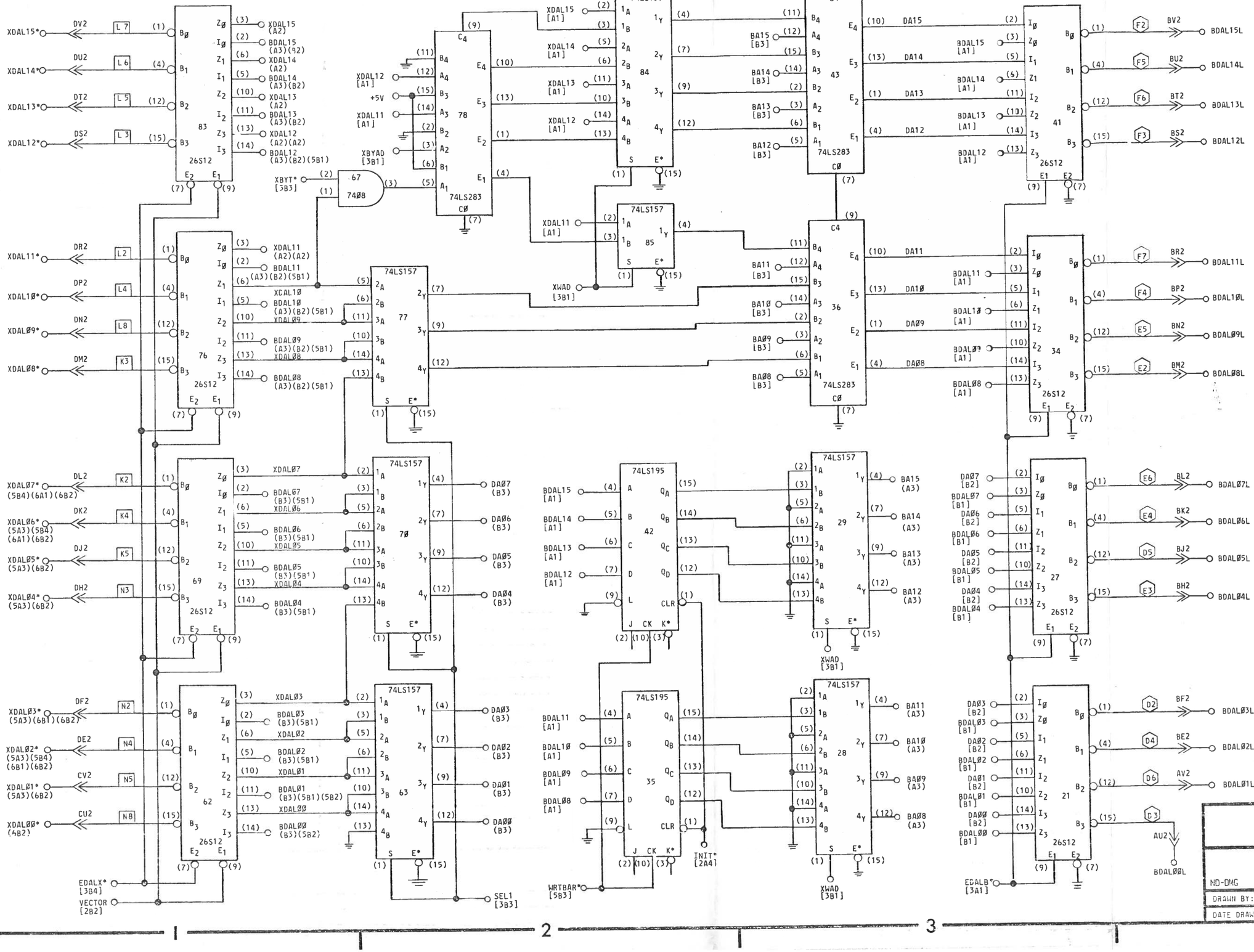

THIS DOCUMENT IS THE EXCLUSIVE PROPERTY OF NUCLEAR DATA, AND MAY NOT BE REPRODUCED, NOR MAY THE INFORMATION CONTAINED THEREIN OR DERIVABLE THEREFROM BE USED IN ANY MANNER, EXCEPT BY WRITTEN PERMISSION OF NUCLEAR DATA, OF A PATENTABLE OR UNPATENTABLE NATURE, ARE EXPRESSLY RESERVED TO NUCLEAR DATA.

ECN	DATE

REVISIONS

NUCLEAR DATA

ND500/660 DMA CONTROLLER/ KYBD. INTERFACE

ND-DMG		
DRAWN BY: JSP	CHECKED BY: EFY 9/27	SHEET 4 OF 7
DATE DRAWN: 8/10/77	APPROVED BY: WHT	S70-2481-00

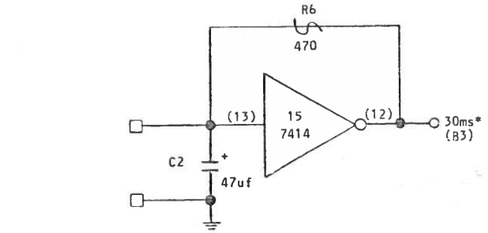

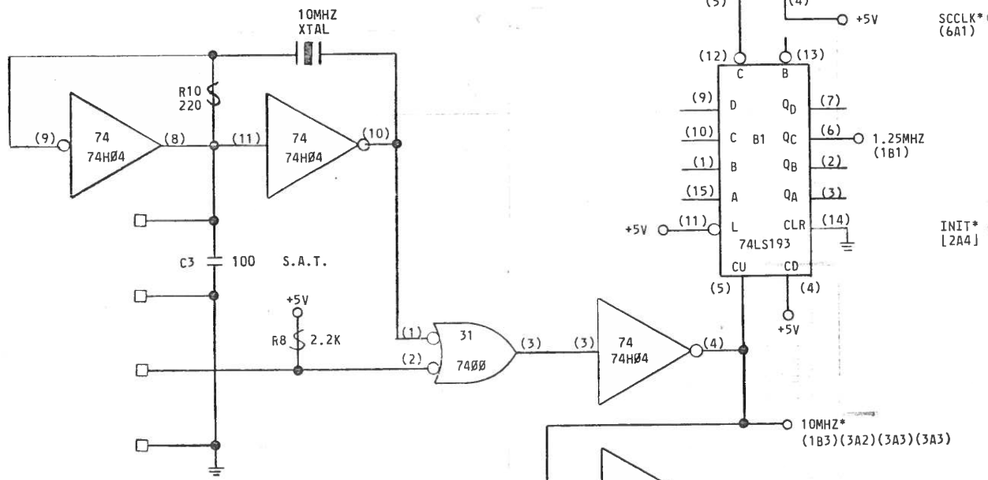

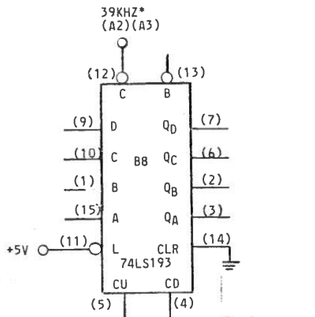

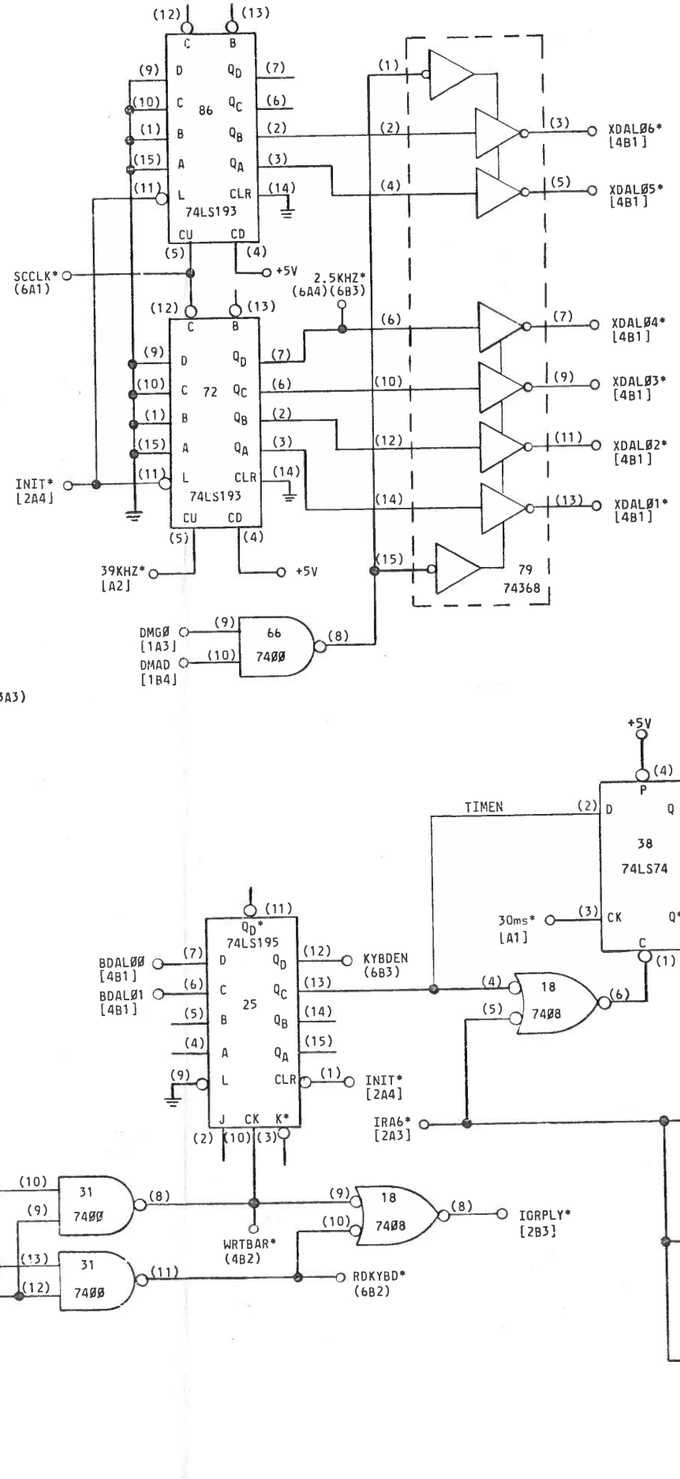

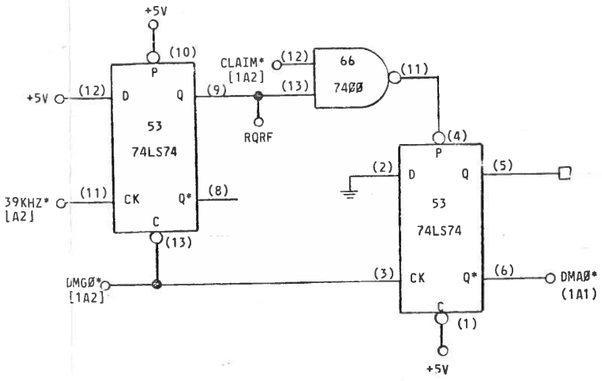

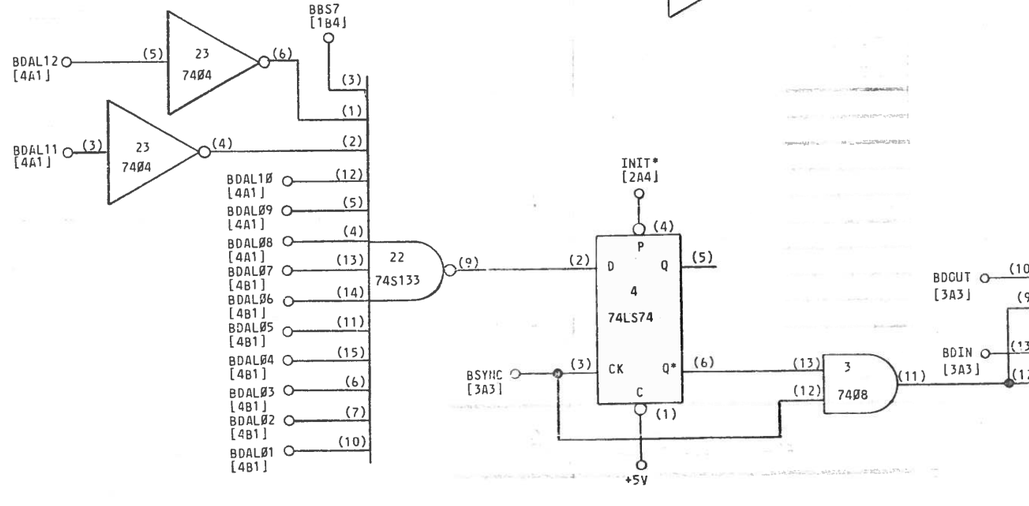

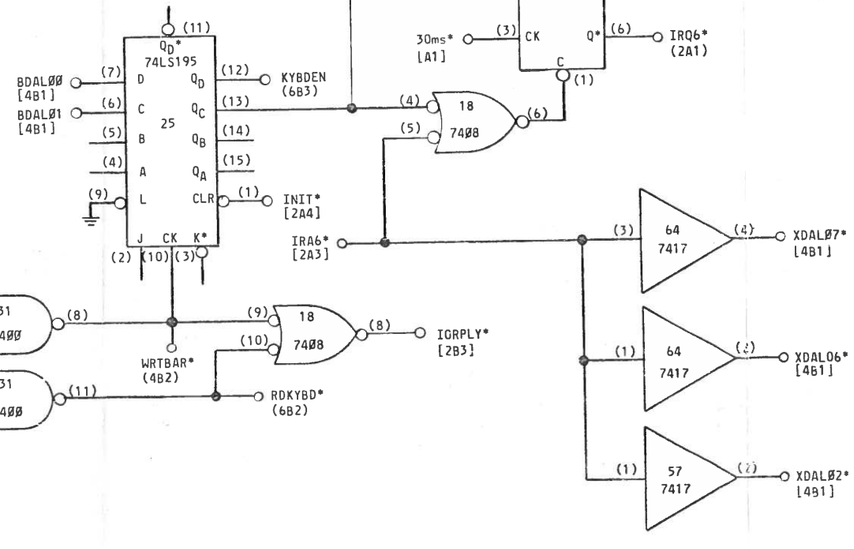

THIS DOCUMENT IS THE EXCLUSIVE PROPERTY OF NUCLEAR DATA, AND MAY NOT BE REPRODUCED, NOR MAY THE INFORMATION CONTAINED THEREIN OR DERIVABLE THEREFROM BE USED IN ANY MANNER, EXCEPT BY WRITTEN PERMISSION OF NUCLEAR DATA, OR THE PROPRIETARY RIGHTS TO THE AFORESAID INFORMATION, OF A PATENTABLE OR UNPATENTABLE NATURE, ARE EXPRESSLY RESERVED TO NUCLEAR DATA.

ECN	DATE

REVISIONS

NUCLEAR DATA

ND600/660 DMA CONTROLLER/
KYBD. INTERFACE

ND-DMG

DRAWN BY: ISP	CHECKED BY:	SHEET 5 OF 7
DATE DRAWN: 8/11/77	APPROVED BY:	S70-2481-00

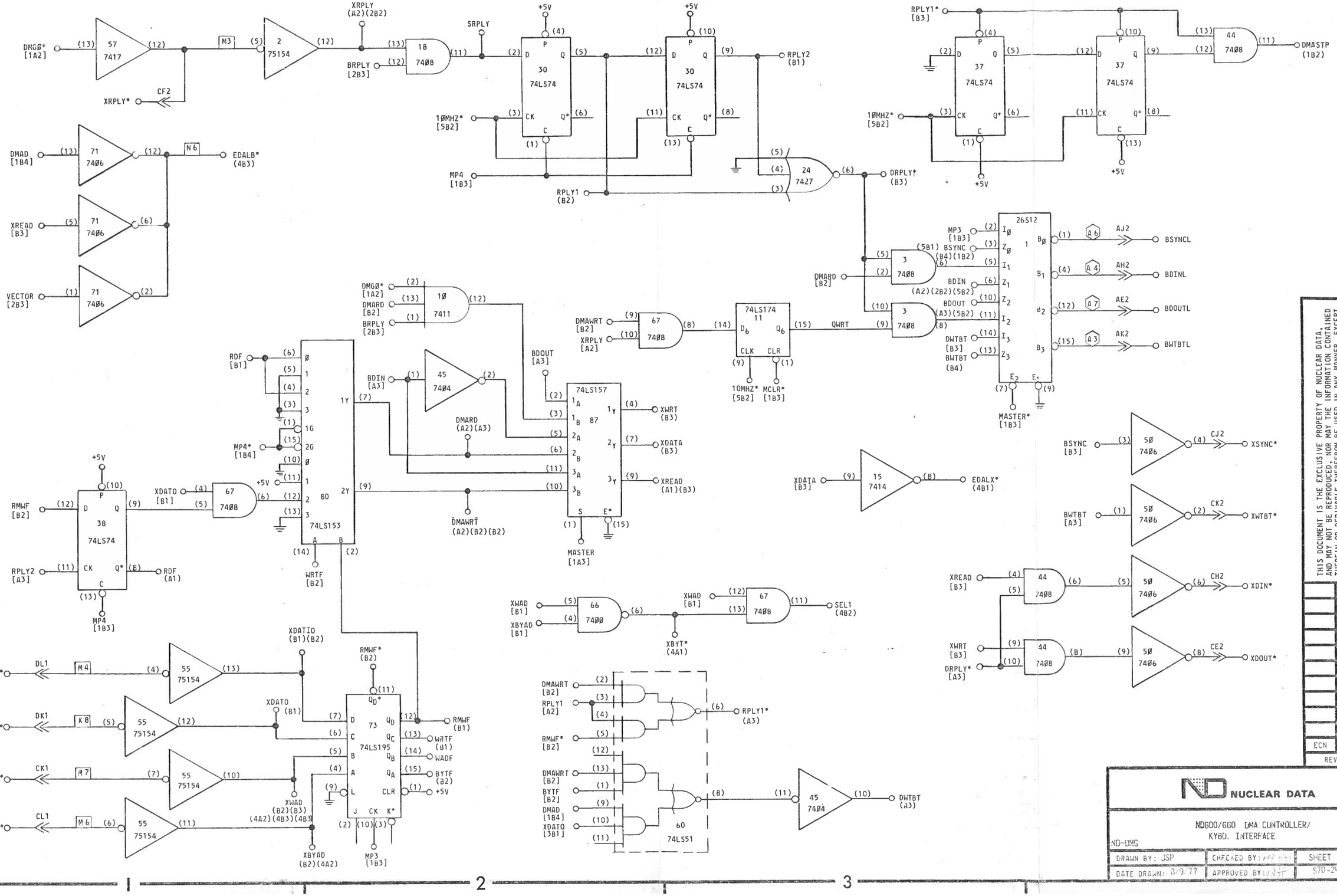

THIS DOCUMENT IS THE EXCLUSIVE PROPERTY OF NUCLEAR DATA, AND MAY NOT BE REPRODUCED, NOR MAY THE INFORMATION CONTAINED THEREIN OR DERIVABLE THEREFROM BE USED IN ANY MANNER, EXCEPT BY WRITTEN PERMISSION OF NUCLEAR DATA, THE PROPRIETARY RIGHTS TO THE AFORESAID INFORMATION, OF A PATENTABLE OR UNPATENTABLE NATURE, ARE EXPRESSLY RESERVED TO NUCLEAR DATA.

ECN	DATE
REVISIONS	

NUCLEAR DATA

ND600/660 DMA CONTROLLER/ KYBD. INTERFACE

ND-DMC

DRAWN BY: JSP	CHECKED BY:	SHEET 3 OF 7
DATE DRAWN: 3/9/77	APPROVED BY:	070-2481-00

NOTE: RESISTOR PACK "C" IN ZONE A-2 IS 2.2K TO +15V

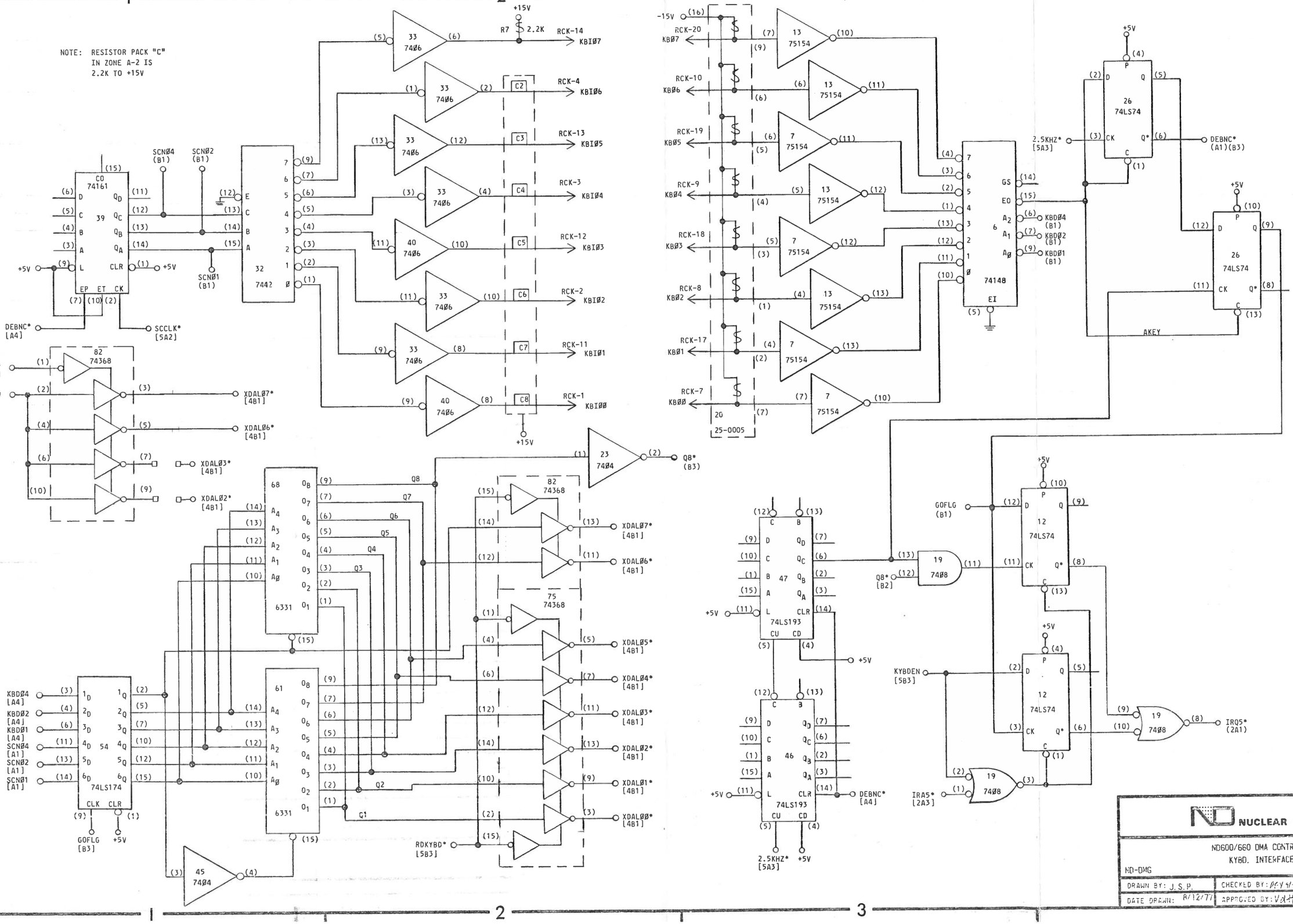

THIS DOCUMENT IS THE EXCLUSIVE PROPERTY OF NUCLEAR DATA, AND MAY NOT BE REPRODUCED, NOR MAY THE INFORMATION CONTAINED THEREIN OR DERIVABLE THEREFROM BE USED IN ANY MANNER, EXCEPT BY WRITTEN PERMISSION OF NUCLEAR DATA, OF A PATENTABLE OR UNPATENTABLE NATURE, ARE EXPRESSLY RESERVED TO NUCLEAR DATA.

ECN	DATE
REVISIONS	

NUCLEAR DATA

ND600/660 DMA CONTROLLER/ KYBD. INTERFACE

ND-DMG		
DRAWN BY: J.S.P.	CHECKED BY:	SHEET 6 OF 7
DATE DRAWN: 8/12/77	APPROVED BY:	S7G-2481-00

PIN	SIGNAL	PIN	SIGNAL	PIN	SIGNAL	PIN	
AA1		AA2	+5V	CA1	XSPARE 1	CA2	+5V
AB1		AB2		CB1	XSPARE 2	CB2	
AC1		AC2	GND	CC1	XSPARE 3	CC2	
AD1		AD2		CD1	XIRQ1* (2A1)	CD2	
AE1		AE2	BDOUTL (3A4)	CE1	XIRQ2* (2A1)		
AF1		AF2	BRPLYL (2B4)	CF1	XIRQ3* (2A1)	CF2	
AH1		AH2	BDINL (3A4)	CH1	XIRQ4* (2A1)	CH2	
AJ1	GND	AJ2	BSYNCL (3A4)	CJ1	GND	CJ2	
AK1		AK2	BWTBTL (3A4)	CK1	XWAD* (3B1)	CK2	XWTBT* (3B4)
AL1		AL2	BIRQL (2B4)	CL1	XBYAD* (3B1)	CL2	
AM1	GND	AM2	BIAKIL (2B1)	CM1	GND	CM2	XSPARE 5
AN1	BDMRL (1A4)	AN2	BIAKOL (2B4)	CN1	XIRA1* (2A3)	CN2	XSPARE 6
AP1	BALTL (NOT USED)	AP2	BBSYL (1B3)	CP1	XIRA2* (2A3)	CP2	XBSY* (1B4)
AR1	BREFL (1A4)	AR2	BDMGIL (1B1)	CR1	XIRA3* (2A3)	CR2	XSPARE 7
AS1		AS2	BDMGOL (1A4)	CS1	XIRA4* (2A3)	CS2	XSPARE 8
AT1	GND	AT2	BINITL (2B4)	CT1	GND	CT2	XINIT* (1A4)
AU1		AU2	BDAL00L (4B4)	CU1	XADDR* (1A4)	CU2	XDAL00* (4B1)
AV1		AV2	BDAL01L (4B4)	CV1	+5V	CV2	XDAL01* (4B1)
BA1	BDCOKH (NOT USED)	BA2	+5V	DA1	XCLK (5B2)	DA2	+5V
BB1		BB2		DB1	XSPARE 9	DB2	-15V
BC1		BC2	GND	DC1	AGND	DC2	GND
BD1		BD2		DD1	XDMR1* (1A1)	DD2	+15V
BE1		BE2	BDAL02L (4B4)	DE1	XDMR2* (1A1)	DE2	XDAL02* (4B1)
BF1		BF2	BDAL03L (4B4)	DF1	XDMR3* (1A1)	DF2	XDAL03* (4B1)
BH1		BH2	BDAL04L (4B4)	DH1	XDMR4* (1A1)	DH2	XDAL04* (4B1)
BJ1	GND	BJ2	BDAL05L (4B4)	DJ1	GND	DJ2	XDAL05* (4B1)
BK1		BK2	BDAL06L (4B4)	DK1	XDATO* (3B1)	DK2	XDAL06* (4B1)
BL1		BL2	BDAL07L (4B4)	DL1	XDATIO* (3B1)	DL2	
BM1	GND	BM2	BDAL08L (4A4)	DM1	GND	DM2	
BN1	BSACKL (1A4)	BN2	BDAL09L (4A4)	DN1	XDMG1* (1A3)	DN2	
BP1		BP2	BDAL10L (4A4)	DP1			
BR1	BEVNTL (NOT USED)	BR2	BDAL11L (4A4)	DR1	XDMG3* (1A3)	DR2	
BS1		BS2	BDAL12L (4A4)	DS1	XDMG4* (1A3)	DS2	
BT1	GND	BT2	BDAL13L (4A4)	DT1	GND	DT2	
BU1		BU2	BDAL14L (4A4)	DU1	XTMOUT* (1B4)	DU2	
BV1	+5V	BV2	BDAL15L (4A4)	DV1	+5V	DV2	

RCK			
PIN	SIGNAL	PIN	SIGNAL
1	KBI00 (6A2)	11	KBI01 (6A2)
2	KBI02 (6A2)	12	KBI03 (6A2)
3	KBI04 (6A2)	13	KBI05 (6A2)
4	KBI06 (6A2)	14	KBI07 (6A2)
5	(NC)	15	(NC)
6	(NC)	16	(NC)
7	KB00 (6A3)	17	KB01 (6A3)
8	KB02 (6A3)	18	KB03 (6A3)
9	KE04 (6A3)	19	KB05 (6A3)
10	KE06 (6A3)	20	KB07 (6A3)

SPARES

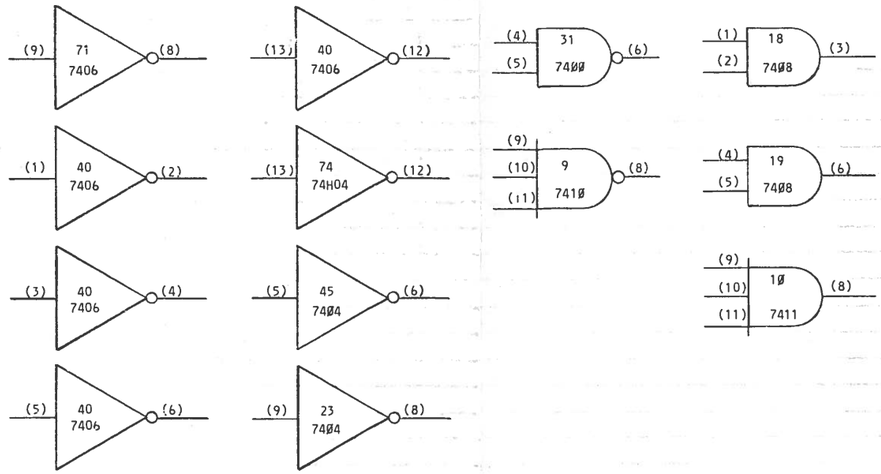

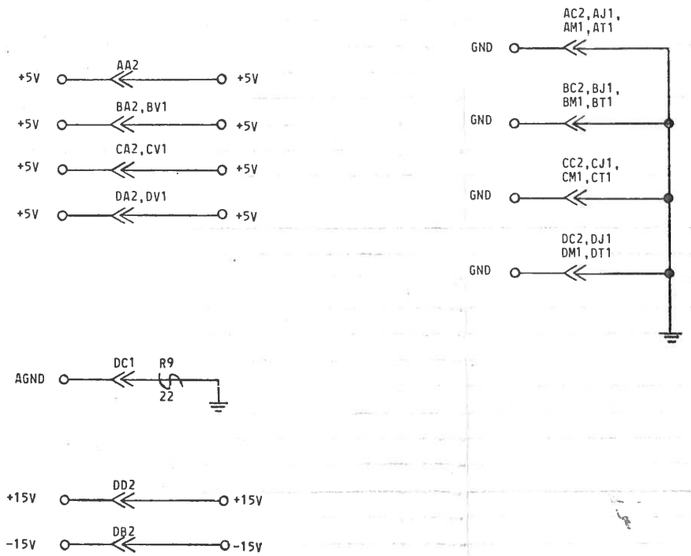

THIS DOCUMENT IS THE EXCLUSIVE PROPERTY OF NUCLEAR DATA, AND MAY NOT BE REPRODUCED, NOR MAY THE INFORMATION CONTAINED THEREIN OR DERIVABLE THEREFROM BE USED IN ANY MANNER, EXCEPT BY WRITTEN PERMISSION OF NUCLEAR DATA. THE PROPRIETARY RIGHTS TO THE AFORESAID INFORMATION, OF A PATENTABLE OR UNPATENTABLE NATURE, ARE EXPRESSLY RESERVED TO NUCLEAR DATA.

ECN	DATE
REVISIONS	

NUCLEAR DATA

ND600/660 DMA CONTROLLER/ KYBC. INTERFACE

ND-DMG

DRAWN BY: JSP	CHECKED BY:	SHEET 7 OF 7
DATE DRAWN: 8/12/77	APPROVED BY:	370-2481-00

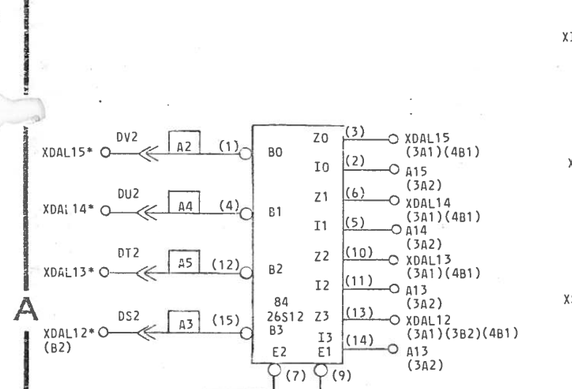

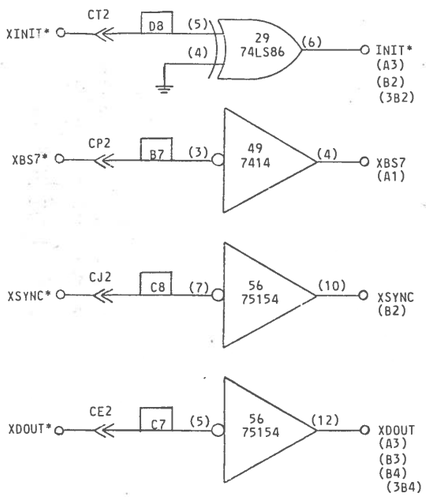

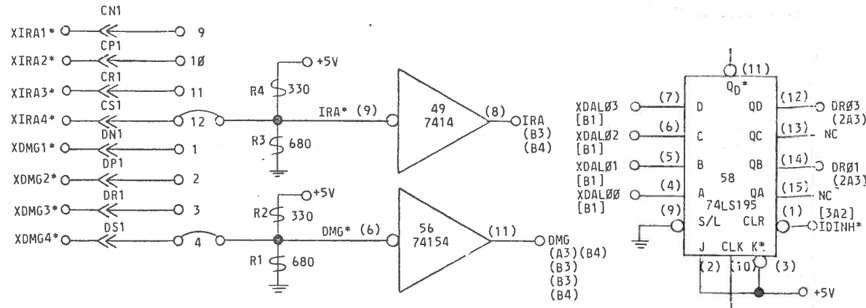

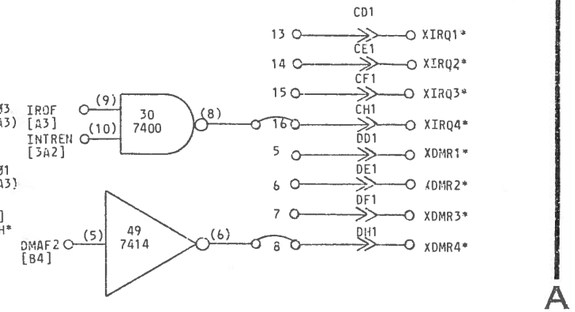

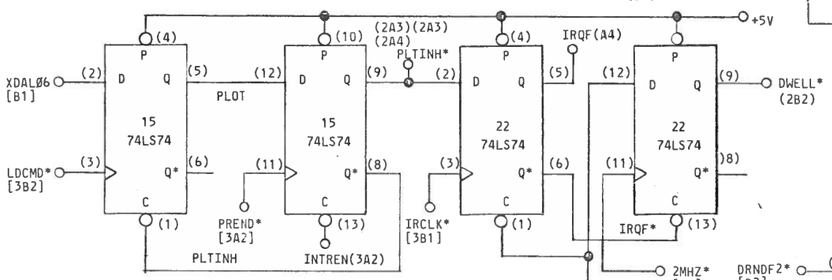

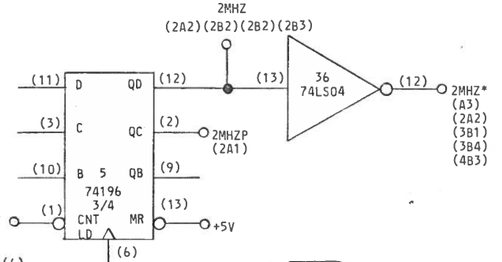

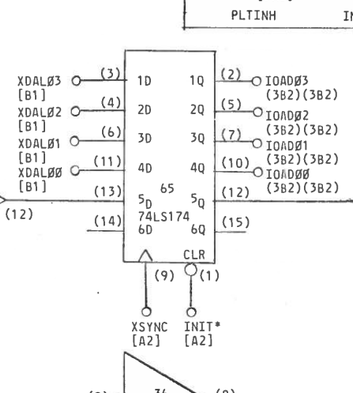

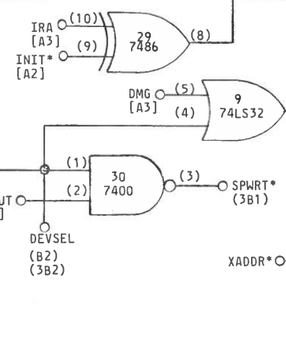

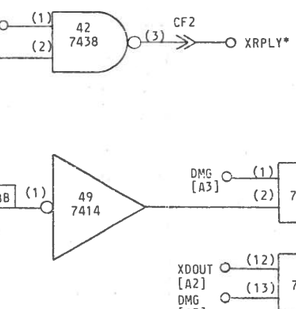

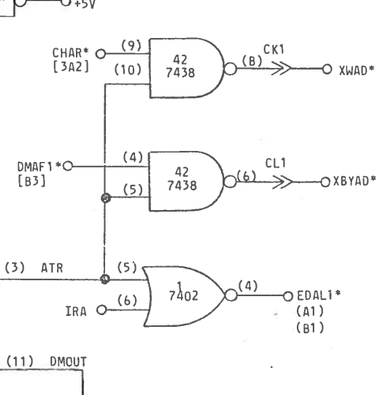

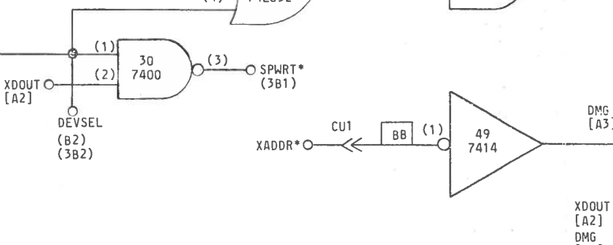

NOTES:

1 - ALL DIODES ARE G964 OR EQUIVALENT, EXCEPT AS NOTED.
2 - ALL RESISTORS ARE 1/4W, ±5%, EXCEPT AS NOTED.
3 - ALL CAPACITORS ARE pf, EXCEPT AS NOTED.
4 - I.C. VOLTAGES, EXCEPT AS NOTED:
14 PIN DIP, PIN (7) GND: PIN (14) +5V
16 PIN DIP, PIN (8) GND: PIN (16) +5V
24 PIN DIP, PIN (12) GND: PIN (24) +5V

5 - THE FOLLOWING SYMBOLS/NOTATIONS ARE USED ON THE DIAGRAM AND/OR PRINTED CIRCUIT BOARD ASSEMBLY.

IC - INTEGRATED CIRCUIT
Q - TRANSISTOR
( ) - IC PIN DESIGNATION
- CONNECTOR DESIGNATION
NC - NO CONNECTION
SAT - SELECT AT TEST
(P1) - PRECISION RESISTORS 100PPM 1/8W, ±1% METAL FILM
- DC COMMON
FB - FERRITE BEAD
A2 RESISTOR PACK 2.2K TO +5V
- GERMANIUM DIODE
- SILICON DIODE
- ZENER DIODE
- TUNNEL DIODE
- SELENIUM DIODE

ADC* — SIGNAL NAME
[4A2] — SIGNAL SOURCE DRAWING LOCATION, OR
(4A2) — SIGNAL LOAD DRAWING LOCATION
ZONE LOCATION
SHEET NUMBER

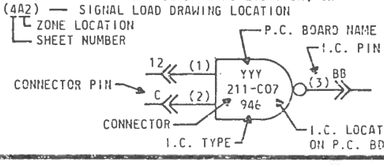

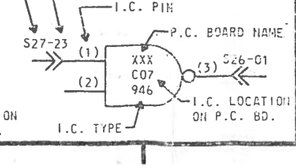

NUCLEAR DATA

LOGIC DIAGRAM
DISPLAY INTERFACE ASSEMBLY
(ND-DMB-A)

DRAWN BY: T.H.J.
DATE DRAWN: 2-17-77
CHECKED BY:
APPROVED BY:
SHEET 1 OF 6
S7U-2413-02

ECN	DATE

REVISIONS

PENDING ECN

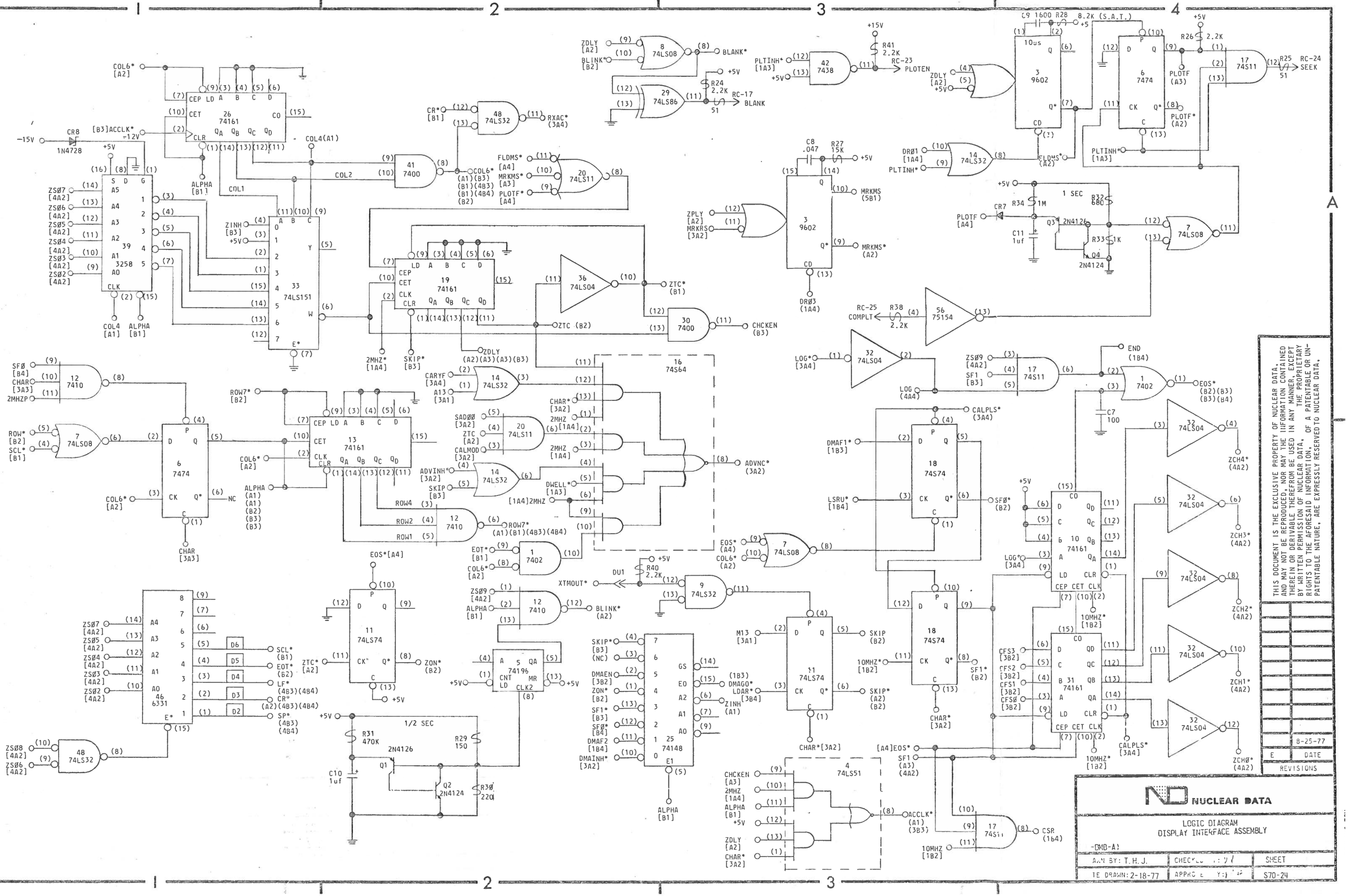
1
2
3
4
A
B
COL6* [A2]
CEP LD A B C D
CET
CLR
26 74161
CO
QA QB QC QD
CR8 1N4728
-15V
-12V
[B3]ACCLK*
+5V
ALPHA [B1]
COL4(A1)
COL2
COL1
S D G
A5 A4 A3 A2 A1 A0
39 3258
CLK
ZSØ7 [4A2]
ZSØ6 [4A2]
ZSØ5 [4A2]
ZSØ4 [4A2]
ZSØ3 [4A2]
ZSØ2 [4A2]
COL4 [A1]
ALPHA [B1]
ZINH [B3]
A B C
Y
33 74LS151
W
E*
2MHZ* [1A4]
SKIP* [B3]
41 7400
CR* [B1]
48 74LS32
RXAC* (3A4)
COL6* (A1)(B3) (B1)(4B3) (B1)(4B4) (B2)
FLDMS* [A4]
MRKMS* [A3]
PLOTF* [A4]
20 74LS11
LD A B C D
CEP
CET
CLK
CLR
19 74161
ZTC* (B1)
36 74LS04
ZTC (B2)
30 7400
CHCKEN (B3)
ZDLY (A2)(A3)(B3)
16 74S64
ZDLY [A2]
BLINK* [B2]
8 74LS08
BLANK*
+5V
R24 2.2K
29 74LS86
RC-17 BLANK
51
PLTINH* [1A3]
42 7438
+15V
R41 2.2K
RC-23 PLOTEN
C9 1600
R28 8.2K (S.A.T.)
10us
3 9602
Q Q* CD
DRØ1 [1A4]
14 74LS32
FLDMS* (A2)
D Q CK C
6 7474
PLOTF (A3)
PLOTF* (A2)
R26 2.2K
17 74S11
R25 51
RC-24 SEEK
C8 .047
R27 15K
MRKMS (5B1)
DRØ3 (1A4)
ZPLY [A2]
MRKRS [3A2]
1 SEC
R34 1M
R32 680
CR7
C11 1uf
Q3 2N4126
R33 1K
Q4 2N4124
7 74LS08
RC-25 COMPLT
R38 2.2K
56 75154
LOG* [3A4]
32 74LS04
LOG (4A4)
ZSØ9 [4A2]
SF1 [B3]
END (1B4)
1 7402
EOS* (B2)(B3) (B3)(B4)
C7 100
CALPLS* (3A4)
DMAF1* [1B3]
18 74S74
SFØ* (B2)
LSRU* [1B4]
ZCH4* (4A2)
ZCH3* (4A2)
ZCH2* (4A2)
ZCH1* (4A2)
ZCHØ* (4A2)
CO QD QC QB QA
B 10 74161
LOG* [3A4]
LD CLR
CEP CET CLK
10MHZ* [1B2]
CFS3 [3B2]
CFS2 [3B2]
CFS1 [3B2]
CFSØ [3B2]
B 31 74161
CALPLS* [3A4]
SF1 (A3) (4A2)
[A4]EOS*
SF1* (B2)
SKIP (B2)
SKIP* (A2) (B2)
CHAR* [3A2]
M13 [3A1]
11 74LS74
DMAGO* [1B3]
LDAR* [3B4]
ZINH (A1)
CHAR*[3A2]
4 74LS51
CHCKEN [A3]
2MHZ [1A4]
ALPHA [B1]
+5V
ZDLY [A2]
CHAR* [3A2]
ACCLK* (A1) (3B3)
17 74S11
CSR (1B4)
10MHZ [1B2]
ROW* [B2]
SCL* [B1]
7 74LS08
D Q CK Q* C
6 7474
NC
CHAR [3A3]
ROW7* [B2]
CEP LD A B C D
CET CLK CLR
13 74161
QA QB QC QD
ALPHA (A1) (A1) (B2) (B3) (B3)
ROW4
ROW2
ROW1
12 7410
ROW7* (A1)(B1)(4B3)(4B4)
SFØ [B4]
CHAR [3A3]
2MHZP
12 7410
CARYF [3A4]
A13 [3A1]
14 74LS32
SADØØ [3A2]
ZTC [A2]
CALMOD [3A2]
20 74LS11
ADVINH* [3A2]
SKIP [B3]
14 74LS32
ADVNC* (3A2)
CHAR* [3A2]
2MHZ [1A4]
DWELL* [1A3]
[1A4]2MHZ
EOT* [B1]
COL6* [A2]
1 7402
EOS* [A4]
COL6* (A2)
7 74LS08
EOS*[A4]
DU1
XTMOUT*
R40 2.2K
9 74LS32
ZSØ9 [4A2]
ALPHA [B1]
12 7410
BLINK* (A2)
ZTC* [A2]
D Q CK Q* C
11 74LS74
ZON* (B2)
+5V
1/2 SEC
R31 470K
2N4126
R29 150
Q1
Q2 2N4124
R3Ø 220
C10 1uf
ZSØ7 [4A2]
ZSØ5 [4A2]
ZSØ4 [4A2]
ZSØ3 [4A2]
ZSØ2 [4A2]
A4 A3 A2 A1 A0
46 6331
D6 D5 D4 D3 D2
SCL* (B1)
EOT* (B2)
LF* (4B3)(4B4)
CR* (A2)(4B3)(4B4)
SP* (4B3) (4B4)
ZSØ8 [4A2]
ZSØ6 [4A2]
48 74LS32
SKIP* [B3] (NC)
DMAEN [3B2]
ZON* [B2]
SF1* [B3]
SFØ* [B4]
DMAF2 [1B4]
DMAINH* [3A2]
7 GS EO A2 A1 A0
25 74148
E1
ALPHA [B1]
SKIP* (B3)
DMAGO* (1B3)
LDAR* [3B4]
ZINH (A1)
CHCKEN (A3)
2MHZ (1A4)
ALPHA (B1)
+5V
ZDLY (A2)
CHAR* (3A2)
4 74LS51
ACCLK* (A1) (3B3)
10MHZ [1B2]
CSR (1B4)
THIS DOCUMENT IS THE EXCLUSIVE PROPERTY OF NUCLEAR DATA, AND MAY NOT BE REPRODUCED, NOR MAY THE INFORMATION CONTAINED THEREIN OR DERIVABLE THEREFROM BE USED IN ANY MANNER, EXCEPT BY WRITTEN PERMISSION OF NUCLEAR DATA, OF A PATENTABLE OR UNPATENTABLE NATURE, ARE EXPRESSLY RESERVED TO NUCLEAR DATA.
E 8-25-77
REVISIONS
DATE
NUCLEAR DATA
LOGIC DIAGRAM
DISPLAY INTERFACE ASSEMBLY
-DMB-A1
DRAWN BY: T.H.J.
CHECKED BY:
SHEET
DATE DRAWN: 2-18-77
APPROVED BY:
S70-24

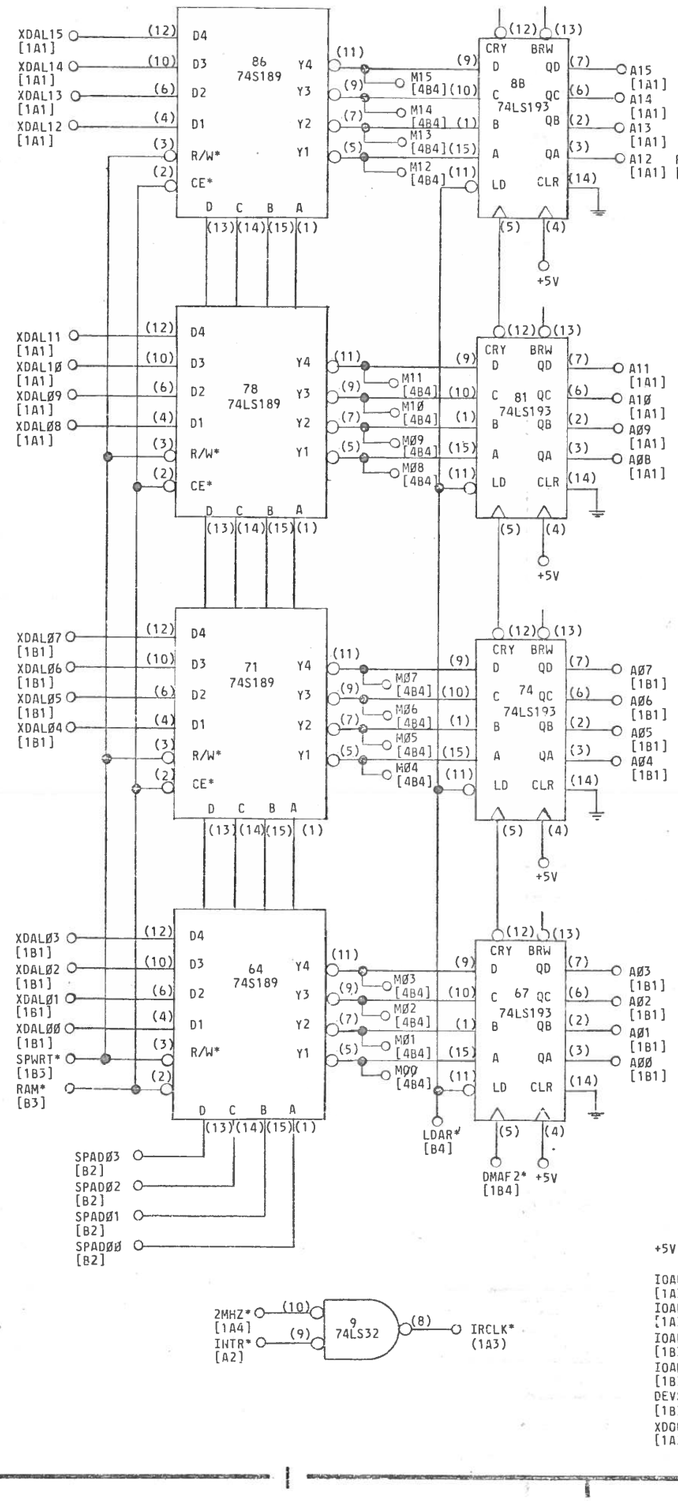

THIS DOCUMENT IS THE EXCLUSIVE PROPERTY OF NUCLEAR DATA, AND MAY NOT BE REPRODUCED, NOR MAY THE INFORMATION CONTAINED THEREIN OR DERIVABLE THEREFROM BE USED IN ANY MANNER, EXCEPT BY WRITTEN PERMISSION OF NUCLEAR DATA, ". THE PROPRIETARY RIGHTS TO THE AFORESAID INFORMATION, OF A PATENTABLE OR UNPATENTABLE NATURE, ARE EXPRESSLY RESERVED TO NUCLEAR DATA, INC.

ECN	DATE
REVISIONS	

NUCLEAR DATA

LOGIC DIAGRAM
DISPLAY INTERFACE ASSEMBLY
(ND-DMB-A)

DRAWN BY: T.H.J.	CHECKED BY:	SHEET 3 OF 6
DATE DRAWN: 2-21-77	APPROVED BY:	S70-2413-02

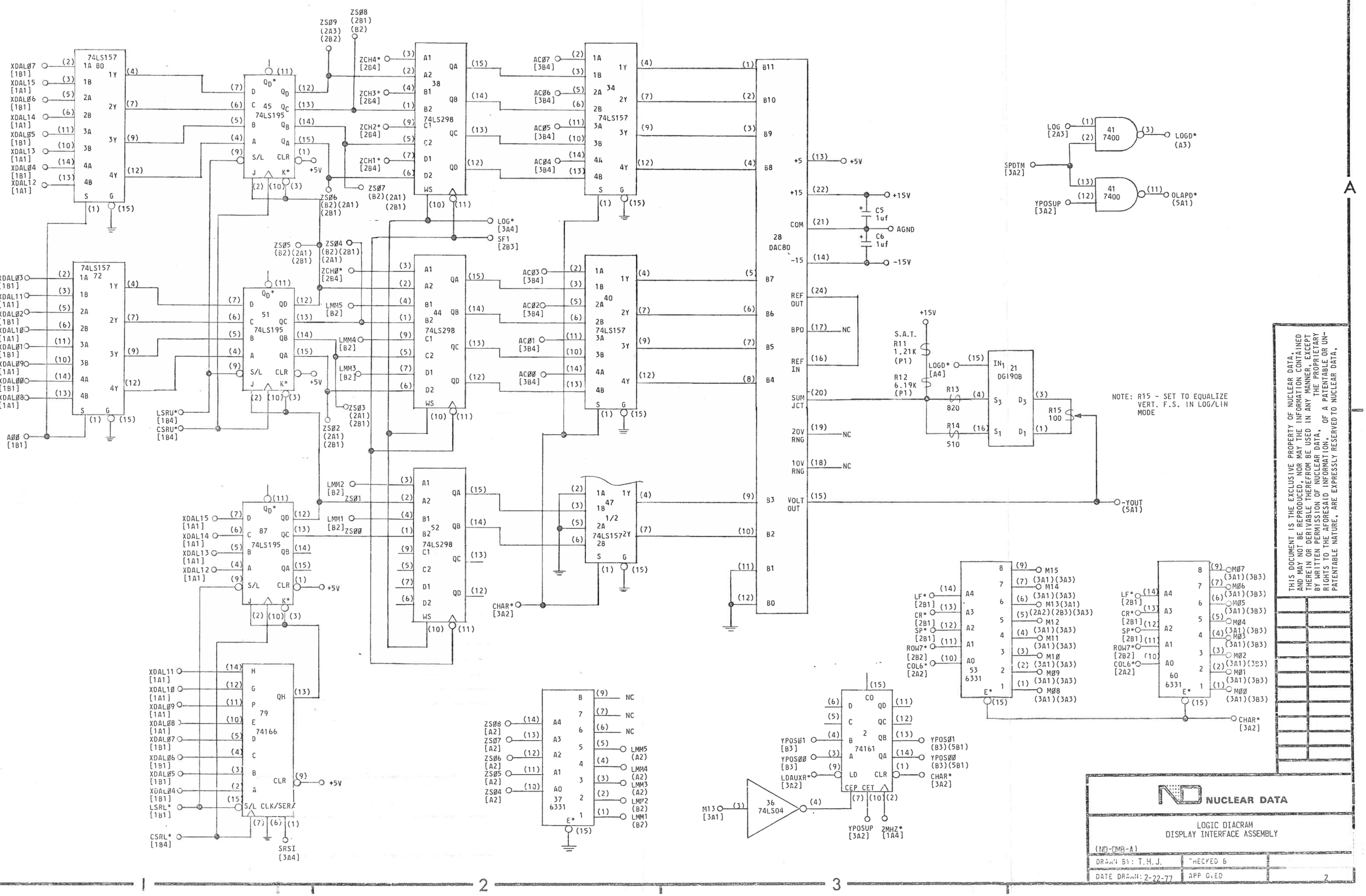

THIS DOCUMENT IS THE EXCLUSIVE PROPERTY OF NUCLEAR DATA, AND MAY NOT BE REPRODUCED, NOR MAY THE INFORMATION CONTAINED THEREIN OR DERIVABLE THEREFROM BE USED IN ANY MANNER, EXCEPT BY WRITTEN PERMISSION OF NUCLEAR DATA, THE PROPRIETARY RIGHTS TO THE AFORESAID INFORMATION, OF A PATENTABLE OR UNPATENTABLE NATURE, ARE EXPRESSLY RESERVED TO NUCLEAR DATA.

NUCLEAR DATA

LOGIC DIAGRAM
DISPLAY INTERFACE ASSEMBLY

(ND-DMB-A)

DRAWN BY: T.H.J.	CHECKED B	
DATE DRAWN: 2-22-77	APP OVED	2

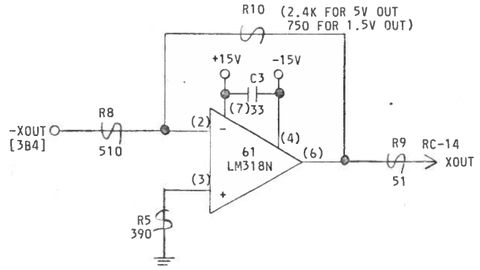

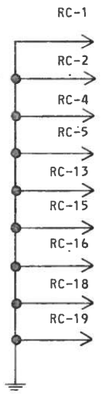

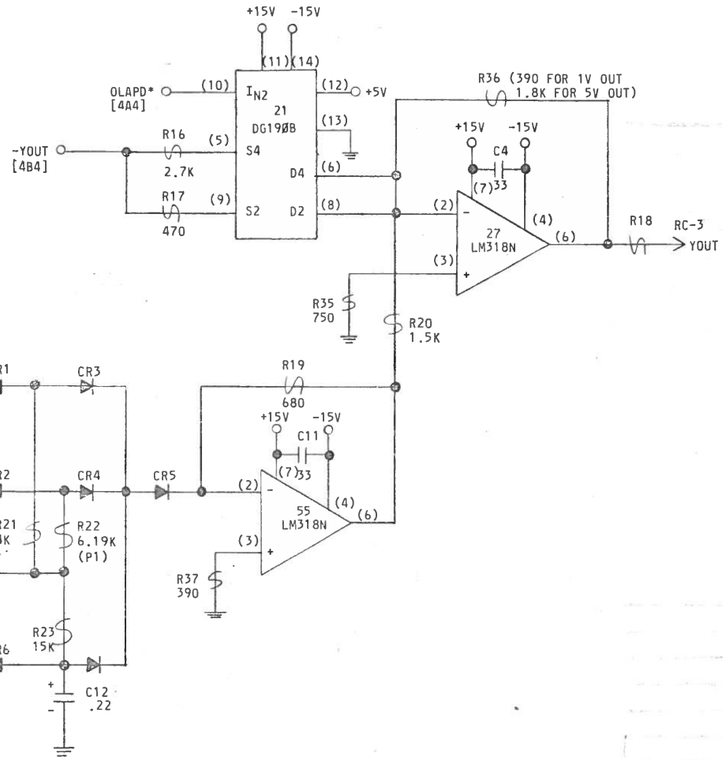

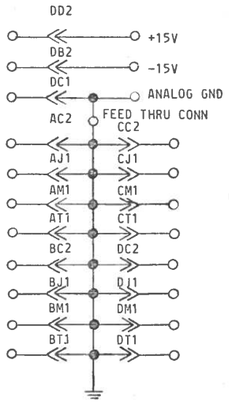

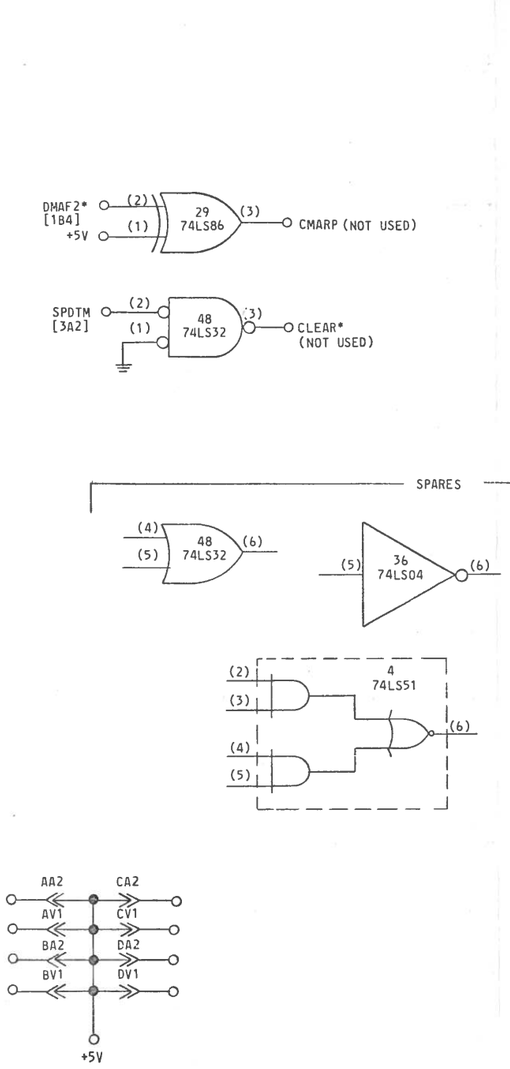

THIS DOCUMENT IS THE EXCLUSIVE PROPERTY OF NUCLEAR DATA, AND MAY NOT BE REPRODUCED, NOR MAY THE INFORMATION CONTAINED THEREIN OR DERIVABLE THEREFROM BE USED IN ANY MANNER, EXCEPT BY WRITTEN PERMISSION OF NUCLEAR DATA, THE PROPRIETARY RIGHTS TO THE AFORESAID INFORMATION, OF A PATENTABLE OR UNPATENTABLE NATURE, ARE EXPRESSLY RESERVED TO NUCLEAR DATA.

ECN	DATE
REVISIONS	

NUCLEAR DATA

LOGIC DIAGRAM
DISPLAY INTERFACE ASSEMBLY

(ND-DNI-A)

DRAWN BY: T.H.J.	CHECKED BY:	SHEET 5 OF 6
DATE DRAWN: 2-23-77	APPROVED BY:	S70-2413-02

PIN	SIGNAL	PIN	SIGNAL	PIN	SIGNAL	PIN	SIGNAL
AAI		AA2	+5V	CAI		CA2	+5V
ABI		AB2		CBI		CB2	
ACI		AC2	GND	CCI		CC2	GND
ADI		AD2		CDI	XIRQ1* [1A4]	CD2	
AEI		AE2		CEI	XIRQ2* [1A4]	CE2	XDOUT* [1A2]
AFI		AF2		CFI	XIRQ3* [1A4]	CF2	XRPLY* [1A4]
AHI		AH2		CHI.	XIRQ4* [1A4]	CH2	
AJI	GND	AJ2		CJI	GND	CJ2	XSYNC* [1A2]
AKI		AK2		CKI	XWAD* [1B4]	CK2	
ALI		AL2		CLI	XBYAD* [1B4]	CL2	
AMI	GND	AM2		CMI	GND	CM2	
ANI		AN2		CNI	XIRA1* [1A2]	CN2	
API		AP2		CPI	XIRA2* [1A2]	CP2	XBS7* [1A2]
ARI		AR2		CRI	XIRA3* [1A2]	CR2	
ASI		AS2		CSI	XIRA4* [1A2]	CS2	
ATI	GND	AT2		CTI	GND	CT2	XINIT* [1A2]
AUI		AU2		CUI	XADDR* [1B3]	CU2	XDALØØ* [1B1]
AVI	+5V	AV2		CVI	+5V	CV2	XDALØ1* [1B1]
BAI		BA2	+5V	DAI	XCLK [1B1]	DA2	+5V
BBI		BB2		DBI		DB2	-15V
BCI		BC2	GND	DCI	ANALOG GND	DC2	GND
BDI		BD2		DDI	XDMR1* [1A4]	DD2	+15V
BEI		BE2		DEI	XDMR2* [1A4]	DE2	XDALØ2* [1B1]
BFI		BF2		DFI	XDMR3* [1A4]	DF2	XDALØ3* [1B1]
BHI		BH2		DHI	XDMR4* [1A4]	DH2	XDALØ4* [1B1]
BJI	GND	BJ2		DJI	GND	DJ2	XDALØ5* [1B1]
BKI		BK2		DKI		DK2	XDALØ6* [1B1]
BLI		BL2		DLI		DL2	XDALØ7* [1B1]
BMI	GND	BM2		DMI	GND	DM2	XDALØ8* [1A1]
BNI		BN2		DNI	XDMG1* [1A2]	DN2	XDALØ9* [1A1]
BPI		.BP2		DPI	XDMG2* [1A2]	DP2	XDAL1Ø* [1A1]
BRI		BR2		DRI	XDMG3* [1A2]	DR2	XDAL11* [1A1]
BSI		BS2		DSI	XDMG4* [1A2]	DS2	XDAL12* [1A1]
BTI	GND	BT2		DTI	GND	DT2	XDAL13* [1A1]
BUI		BU2		DUI	XTMOUT* [2B2]	DU2	XDAL14* [1A1]
BVI	+5V	BV2		DVI	+5V	DV2	XDAL15* [1A1]

RC CONN.			
PIN	SIGNAL	PIN	SIGNAL
1	GND	14	XOUT [5A2]
2	GND	15	GND
3	YOUT [5A2]	16	GND
4	GND	17	BLANK [2A3]
5	GND	18	GND
6		19	GND
7		20	
8		21	
9		22	
10		23	PLOTEN [2A3]
11		24	SEEK [2A4]
12		25	COMPLT [2A3]
13	GND	26	

THIS DOCUMENT IS THE EXCLUSIVE PROPERTY OF NUCLEAR DATA, AND MAY NOT BE REPRODUCED, NOR MAY THE INFORMATION CONTAINED THEREIN OR DERIVABLE THEREFROM BE USED IN ANY MANNER, EXCEPT BY WRITTEN PERMISSION OF NUCLEAR DATA, THE PROPRIETARY RIGHTS TO THE AFORESAID INFORMATION, OF A PATENTABLE OR UN-PATENTABLE NATURE, ARE EXPRESSLY RESERVED TO NUCLEAR DATA.

ECN	DATE
REVISIONS	

NUCLEAR DATA

LOGIC DIAGRAM
DISPLAY INTERFACE ASSEMBLY

ND-DMB-A

DRAWN BY: THJ	CHECKED BY:	SHEET 6 OF 6
DATE DRAWN: 11/21/77	APPROVED BY:	S70-2413-02

PENDING ECN

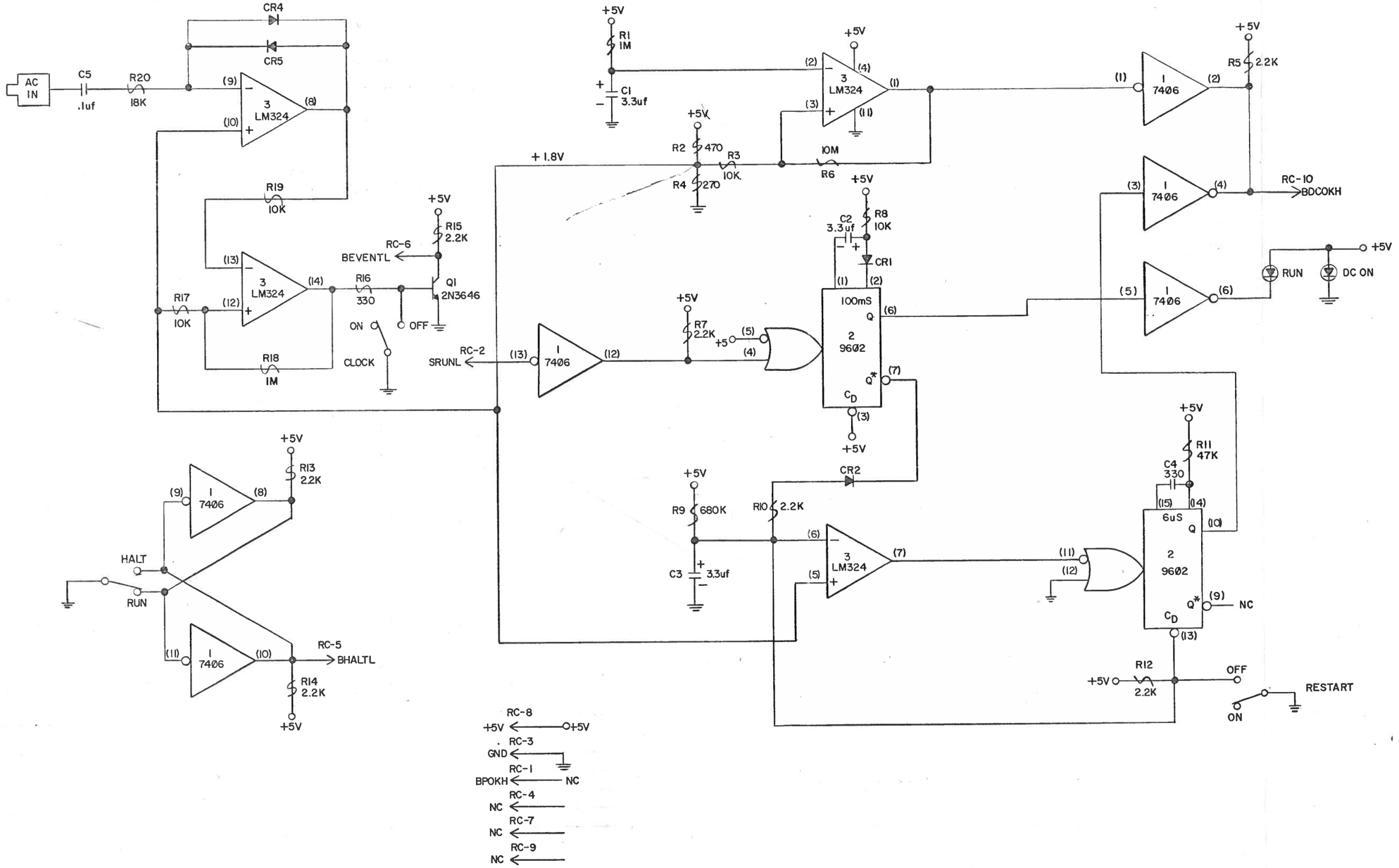

ECN	DATE
REVISIONS	

NOTES:

1 - ALL DIODES ARE G964 OR EQUIVALENT, EXCEPT AS NOTED.
2 - ALL RESISTORS ARE 1/4W, ±5%, EXCEPT AS NOTED.
3 - ALL CAPACITORS ARE pf, EXCEPT AS NOTED.
4 - I.C. VOLTAGES, EXCEPT AS NOTED:
14 PIN DIP, PIN (7) GND: PIN (14) +5V
16 PIN DIP, PIN (8) GND: PIN (16) +5V
24 PIN DIP, PIN (12) GND: PIN (24) +5V

5 - THE FOLLOWING SYMBOLS/NOTATIONS ARE USED ON THE DIAGRAM AND/OR PRINTED CIRCUIT BOARD ASSEMBLY.

IC - INTEGRATED CIRCUIT
Q - TRANSISTOR
( ) - IC PIN DESIGNATION
- CONNECTOR DESIGNATION
NC - NO CONNECTION
- RIBBON CABLE CONNECTOR DESIGNATION
SAT - SELECT AT TEST
(P1) - PRECISION RESISTORS 100PPM 1/8W, ±1% METAL FILM
- DC COMMON
- L.E.D.
- FEMALE AMP PIN
- GERMANIUM DIODE
- SILICON DIODE
- ZENER DIODE
- TUNNEL DIODE
- SELENIUM DIODE
- MALE AMP PIN

ADC - — SIGNAL NAME
(4A2) — SIGNAL SOURCE DRAWING LOCATION, OR
(4A2) — SIGNAL LOAD DRAWING LOCATION
ZONE LOCATION
SHEET NUMBER

CONNECTOR NAME & PIN NUMBER
RSC-3 (1) (2)
35 7408
I.C. PIN
(3)
I.C. TYPE
I.C. LOCATION ON P.C. BD.

CONNECTOR
CONNECTOR PIN
I.C. PIN
S27-23 (1) (2)
XXX C07 946
P.C. BOARD NAME
(3) S26-01
I.C. TYPE
I.C. LOCATION ON P.C. BD.

NUCLEAR DATA

LOGIC DIAGRAM
POWER MONITOR & LINE CLOCK
(ND-PMG-A)

DRAWN BY: THJ	CHECKED BY:	SHEET 1 OF 1
DATE DRAWN: 11/7/77	APPROVED BY:	570-2478-03

PENDING ECN