INDEX OF LOGICAL DRAWINGS FOR REMOTE STORE UNIT (WG006)

WG006/1	DATA HIGHWAYS
" / 2	DATA HIGHWAYS
" / 3	DATA HIGHWAYS
" / 4	DATA HIGHWAYS
" / 5	DATA HIGHWAYS
" / 6	DATA HIGHWAYS
" / 7	PARITY BIT & STORE TIMING
" / 8	STORE DECODE
" / 9	TIMING CONTROL
" / 10	ADDRESS HIGHWAYS
" / 11	STORE CONTROL
/ 12	'SINH' SCHEMATIC REMOTE STORES.

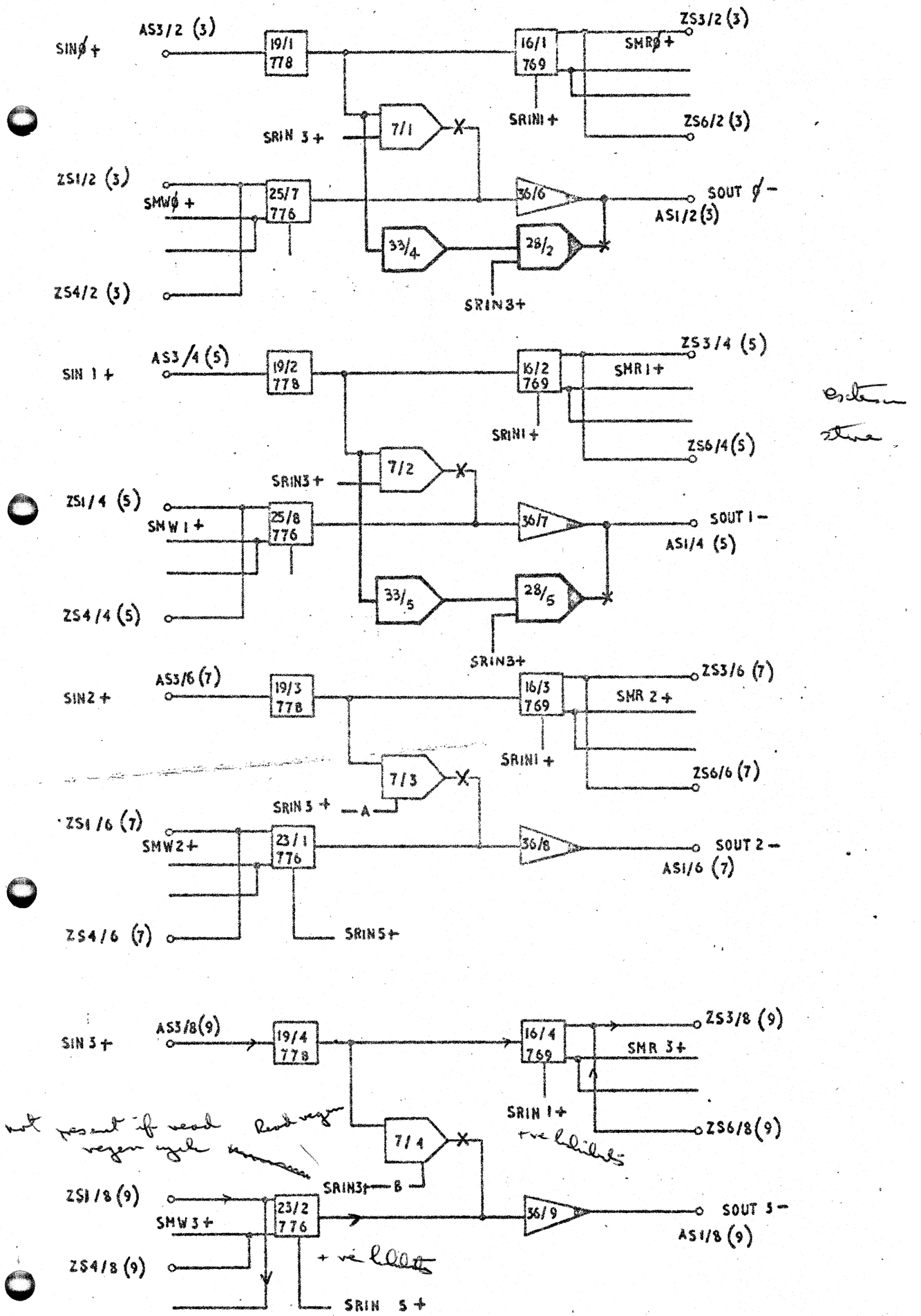

DATA HIGHWAYS — WGC

SUB	ISS

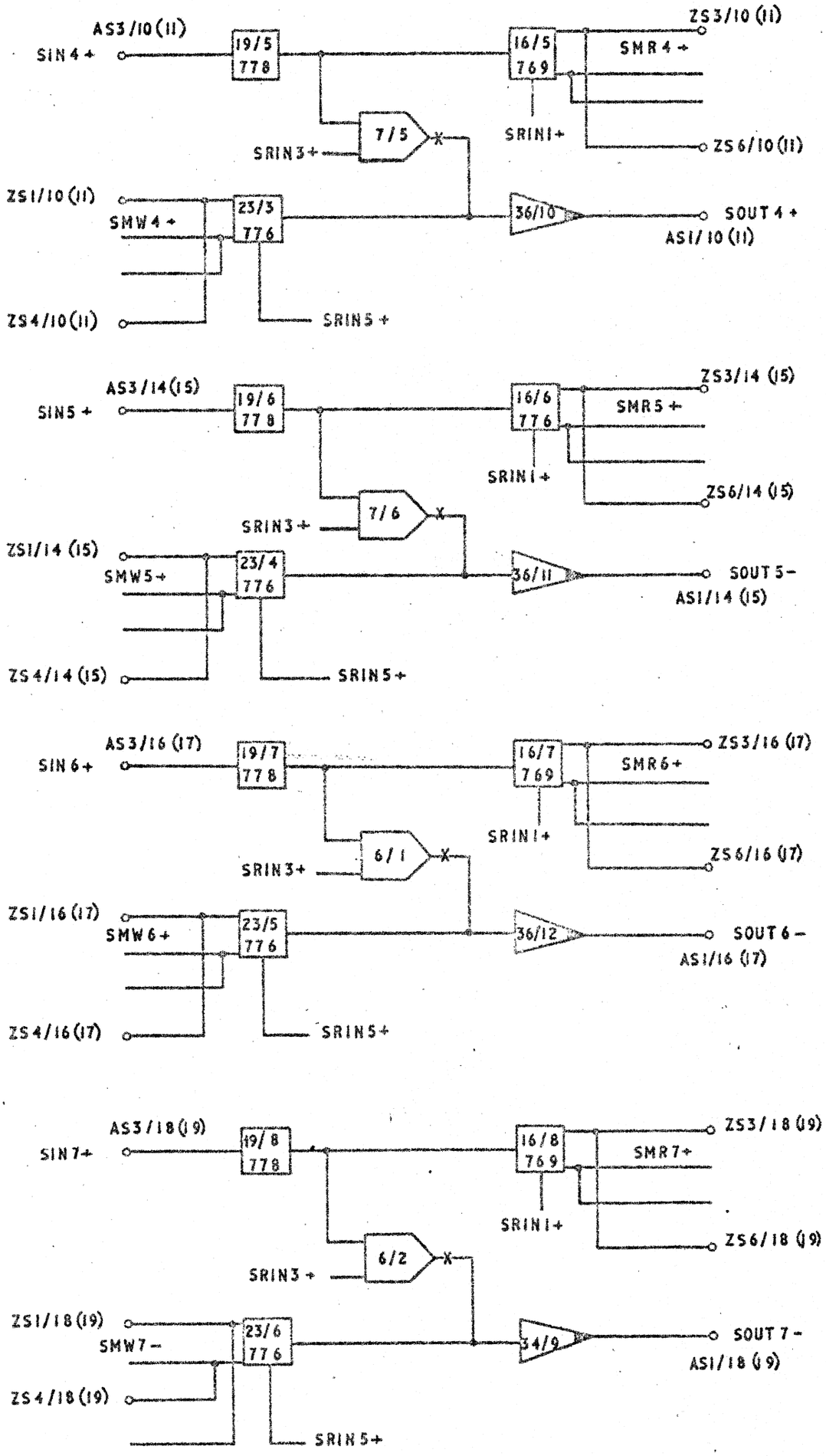
AS3/10(11)
SIN4+
19/5
778
16/5
769
ZS3/10(11)
SMR4+
7/5
SRIN3+
SRIN1+
ZS6/10(11)
ZS1/10(11)
SMW4+
23/3
776
36/10
SOUT4+
AS1/10(11)
ZS4/10(11)
SRIN5+
AS3/14(15)
SIN5+
19/6
778
16/6
776
ZS3/14(15)
SMR5+
SRIN1+
ZS6/14(15)
7/6
SRIN3+
ZS1/14(15)
SMW5+
23/4
776
36/11
SOUT5-
AS1/14(15)
ZS4/14(15)
SRIN5+
AS3/16(17)
SIN6+
19/7
778
16/7
769
ZS3/16(17)
SMR6+
SRIN1+
6/1
SRIN3+
ZS6/16(17)
ZS1/16(17)
SMW6+
23/5
776
36/12
SOUT6-
AS1/16(17)
ZS4/16(17)
SRIN5+
AS3/18(19)
SIN7+
19/8
778
16/8
769
ZS3/18(19)
SMR7+
SRIN1+
ZS6/18(19)
6/2
SRIN3+
ZS1/18(19)
SMW7-
23/6
776
34/9
SOUT7-
AS1/18(19)
ZS4/18(19)
SRIN5+

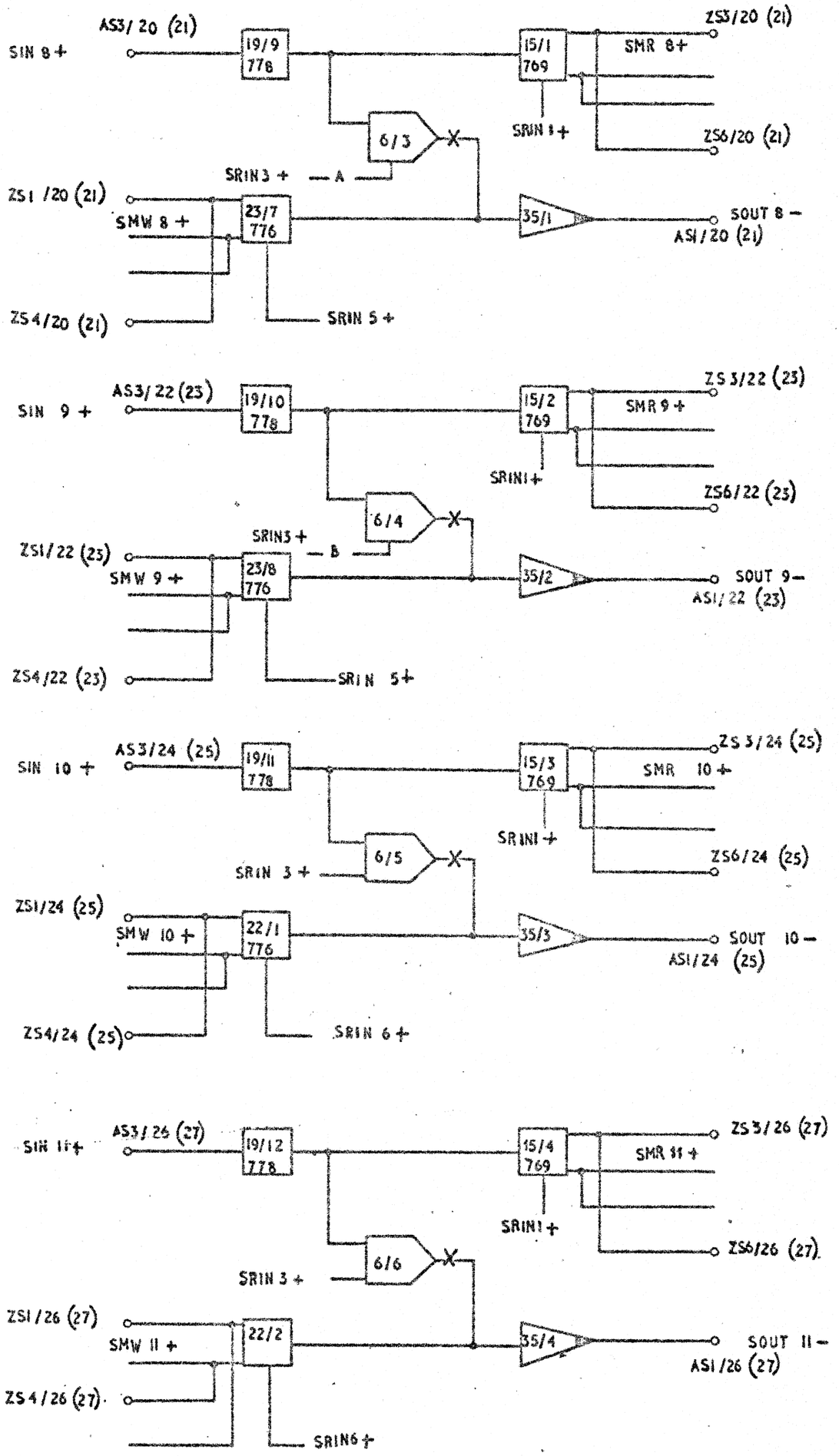

DATA HIGHWAYS WGC06/3

SUB	155															
ACW	0749															

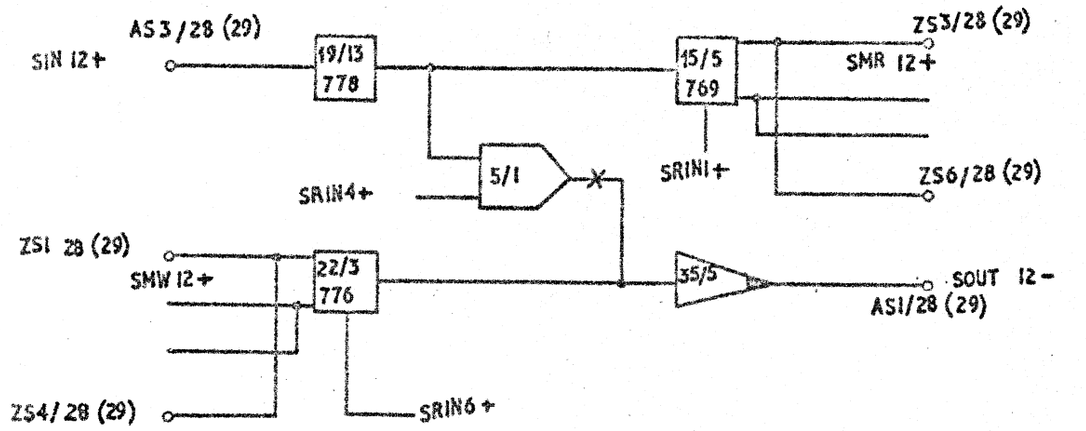

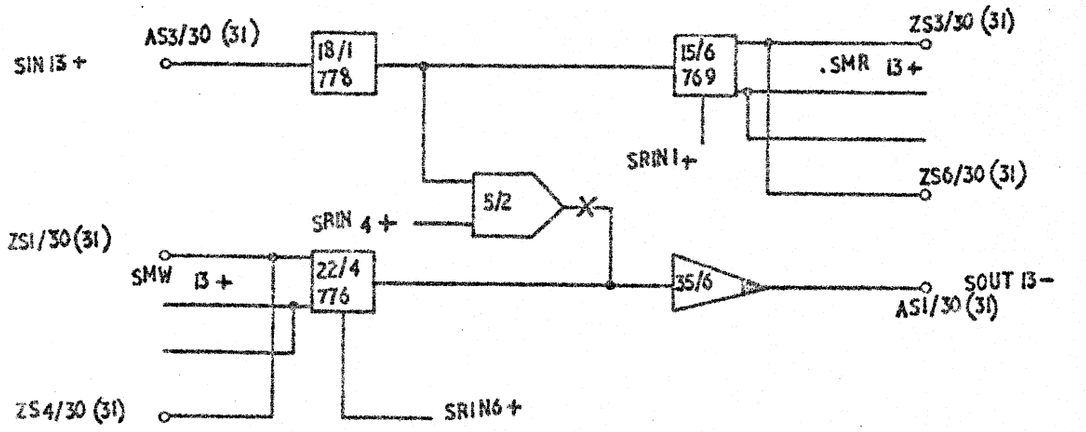

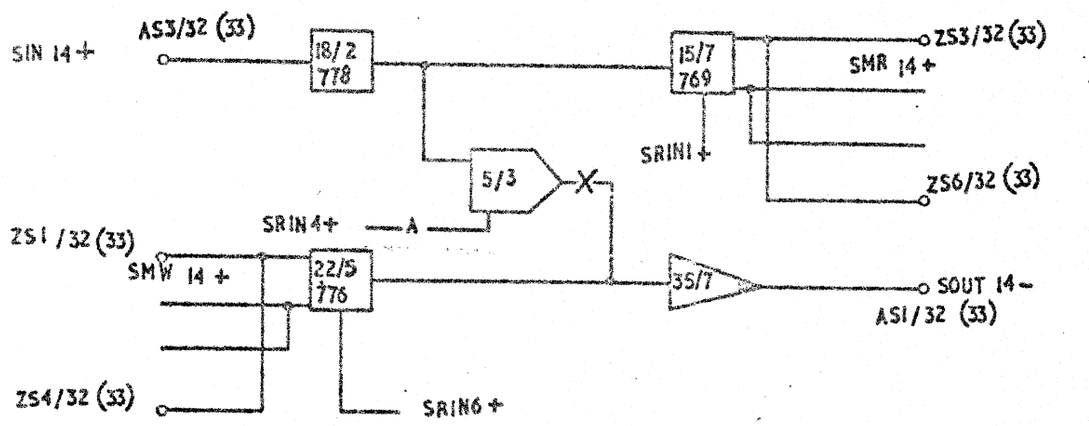

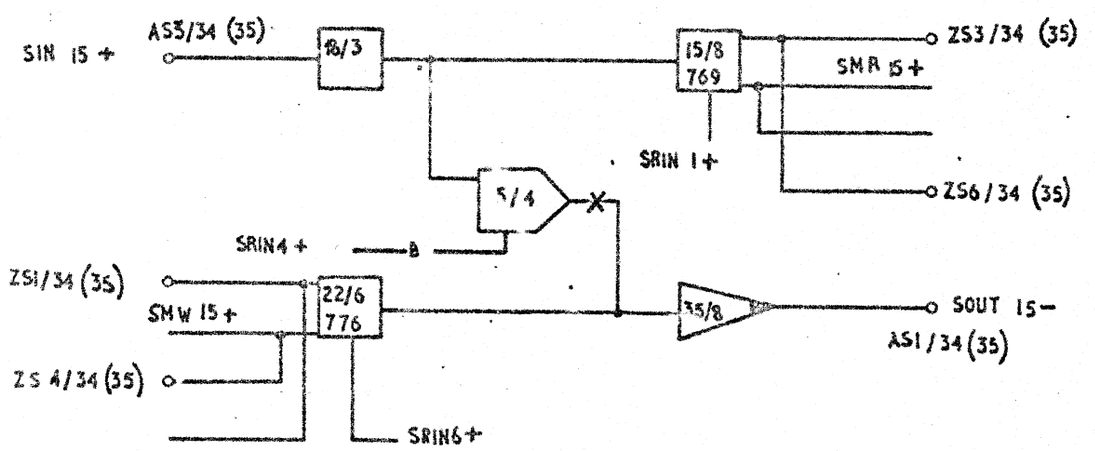

DATA HIGHWAYS. WGC 06/4

	ISS														
	0749														

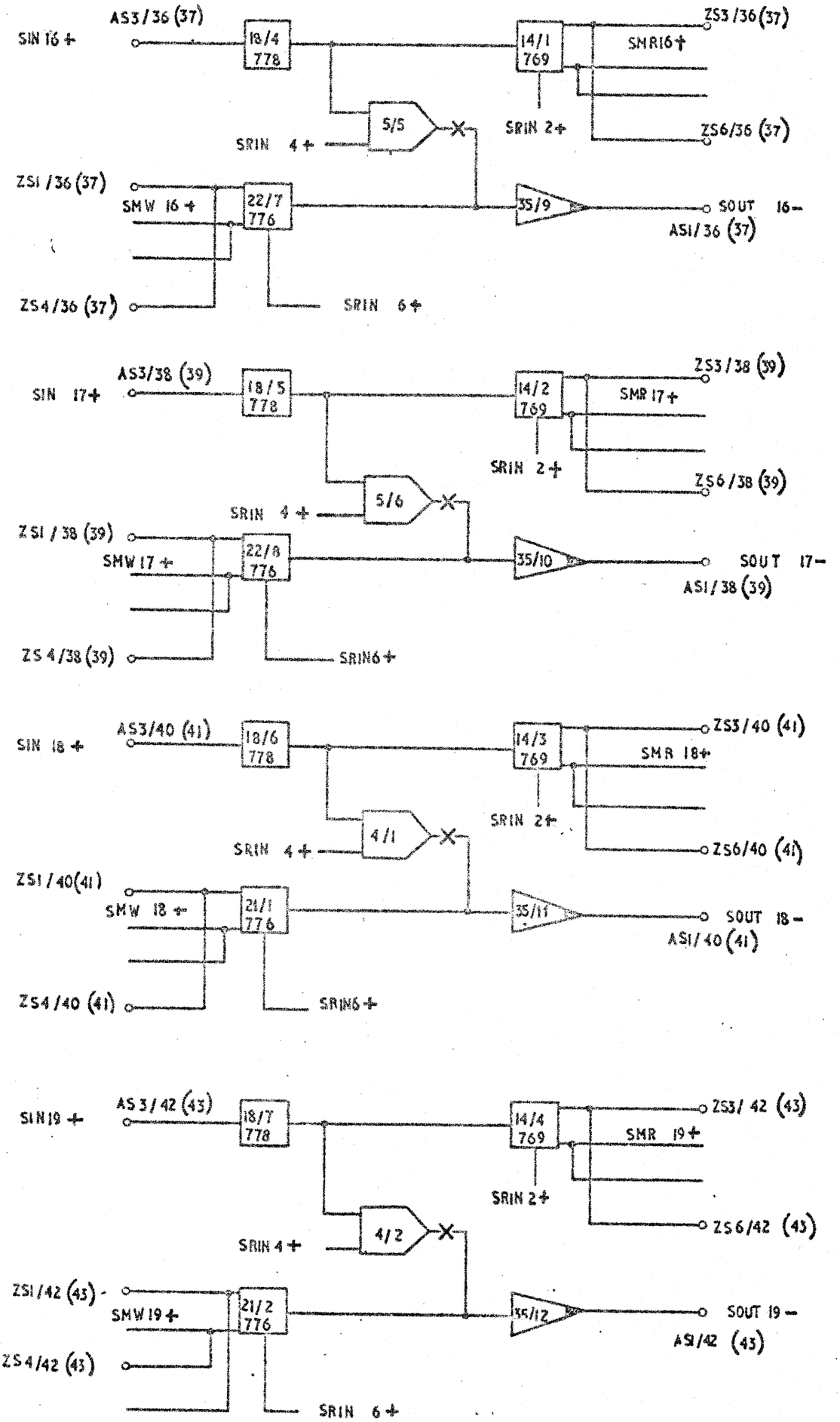

DATA HIGHWAYS.

WGC06/5

SUB	ISS
ACW	0749

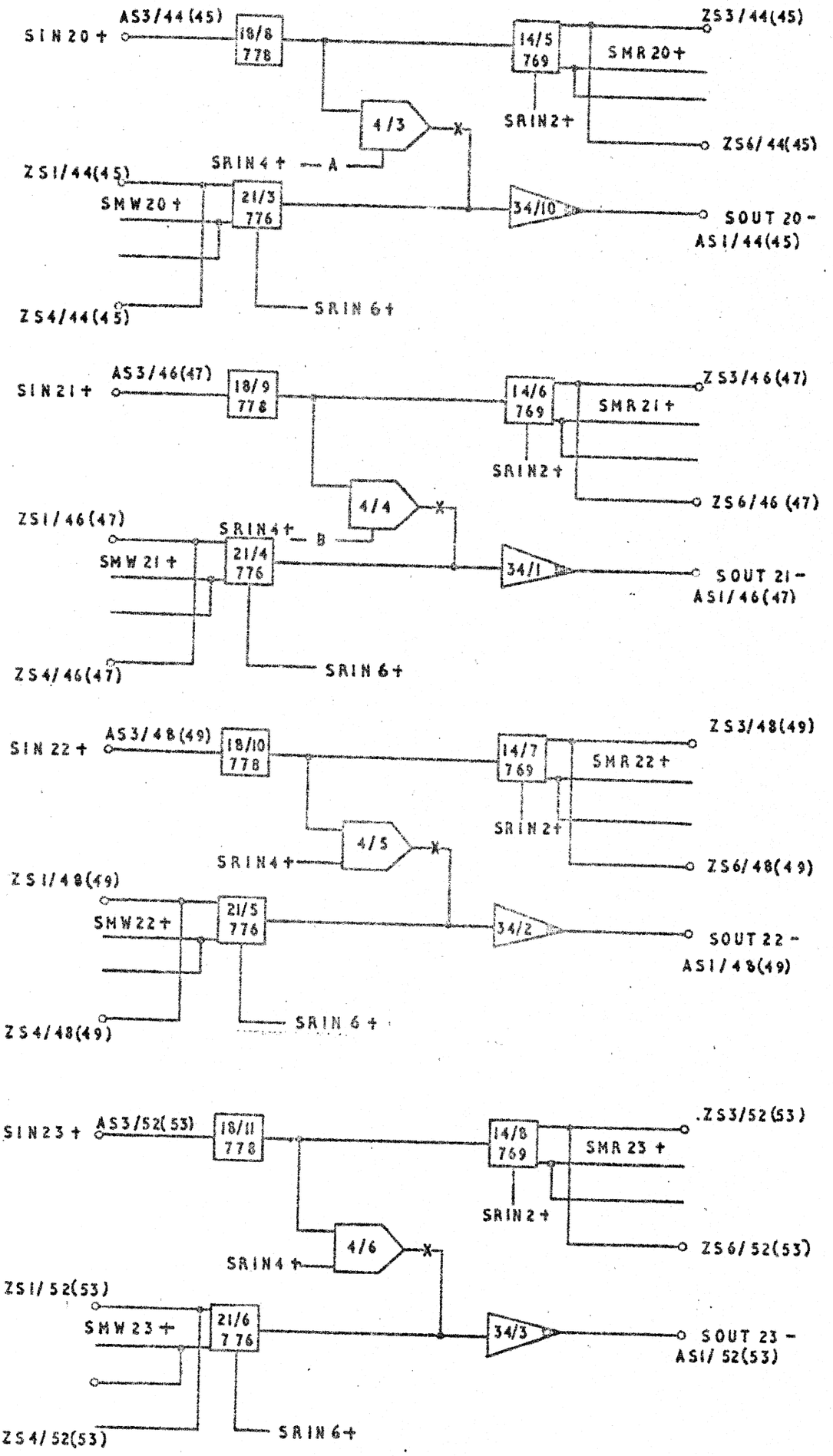
SIN 20 +
AS3/44(45)
18/8
778
14/5
769
ZS3/44(45)
SMR 20 +
SRIN2 +
4/3
X
ZS6/44(45)
SRIN 4 + — A
ZS1/44(45)
SMW 20 +
21/3
776
34/10
SOUT 20 -
AS1/44(45)
ZS4/44(45)
SRIN 6 +
SIN 21 +
AS3/46(47)
18/9
778
14/6
769
ZS3/46(47)
SMR 21 +
SRIN2 +
4/4
X
ZS6/46 (47)
ZS1/46(47)
SRIN 4 + — B
SMW 21 +
21/4
776
34/1
SOUT 21 -
AS1/46(47)
ZS4/46(47)
SRIN 6 +
SIN 22 +
AS3/48(49)
18/10
778
14/7
769
ZS3/48(49)
SMR 22 +
SRIN 2 +
4/5
X
SRIN 4 +
ZS6/48(49)
ZS1/48(49)
SMW 22 +
21/5
776
34/2
SOUT 22 -
AS1/48(49)
ZS4/48(49)
SRIN 6 +
SIN 23 +
AS3/52(53)
18/11
778
14/8
769
.ZS3/52(53)
SMR 23 +
SRIN 2 +
4/6
X
ZS6/52(53)
SRIN 4 +
ZS1/52(53)
SMW 23 +
21/6
776
34/3
SOUT 23 -
AS1/52(53)
ZS4/52(53)
SRIN 6 +

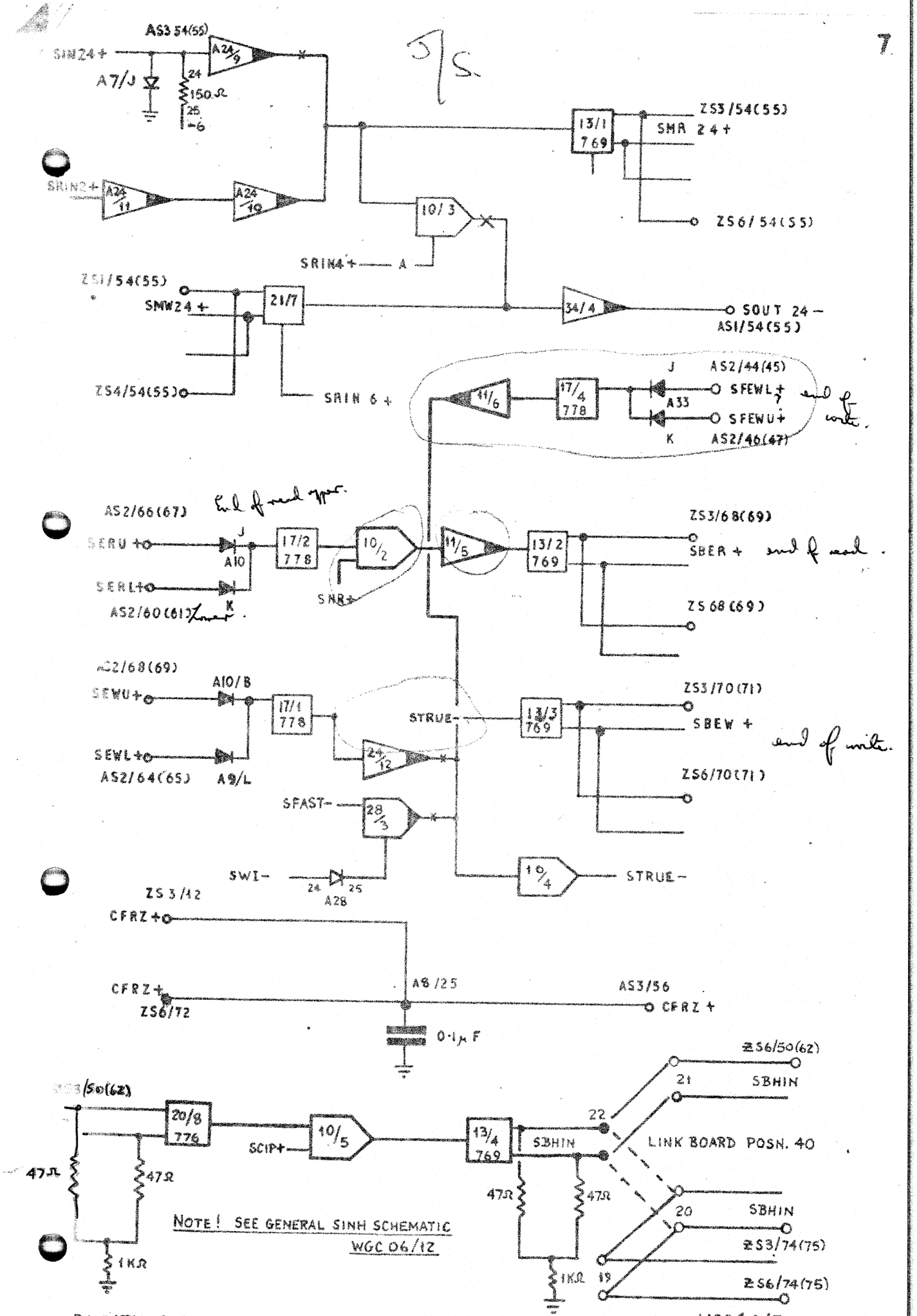

PARITY BIT & STORE TIMING

WGCØ6/7.

SUB	ISS	1	2	3	4									

8

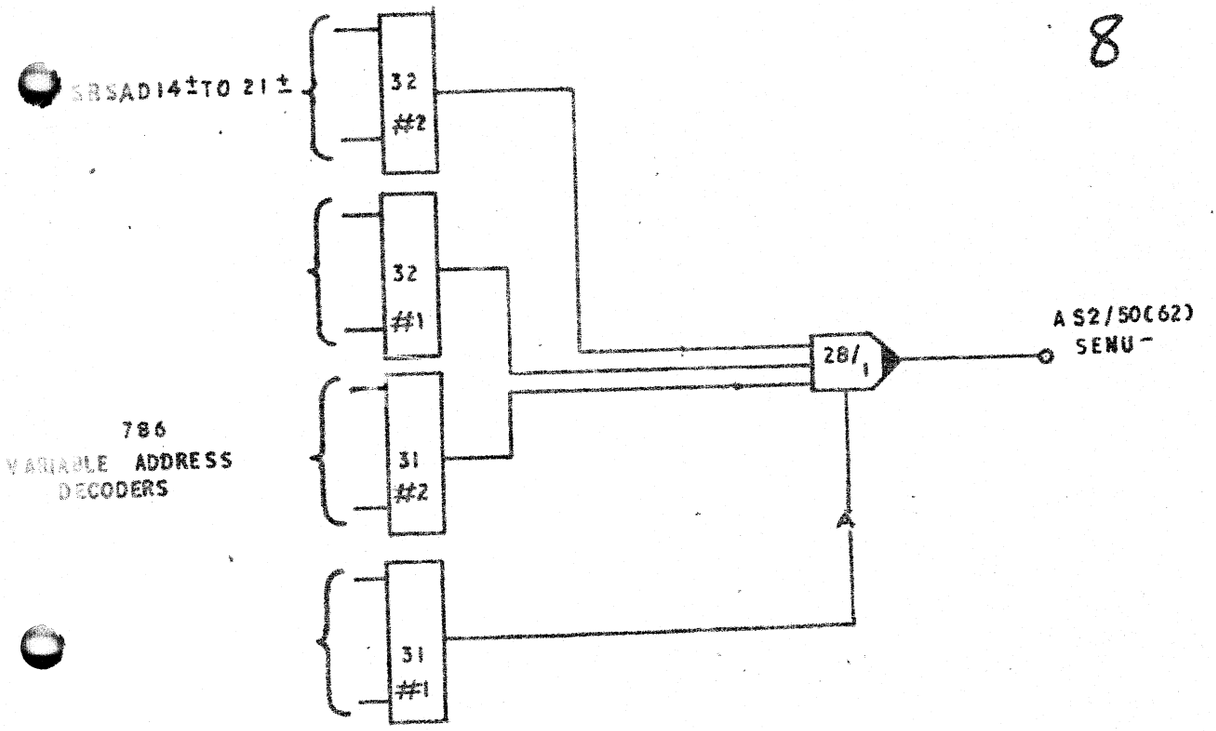
SRSAD14±TO 21±
32
#2
32
#1
31
#2
31
#1
786
VARIABLE ADDRESS
DECODERS
28/1
A
AS2/50(62)
SENU-

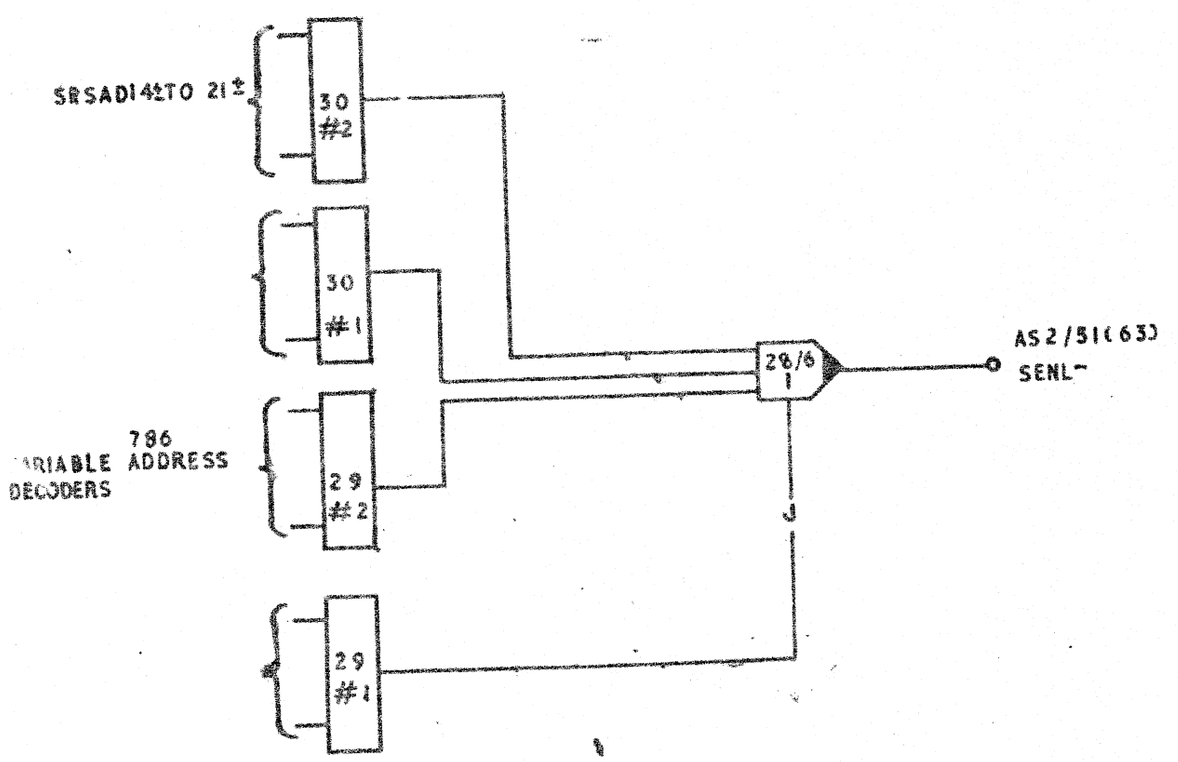
SRSAD14±TO 21±
30
#2
30
#1
29
#2
29
#1
786
VARIABLE ADDRESS
DECODERS
28/6
1
J
AS2/51(63)
SENL-

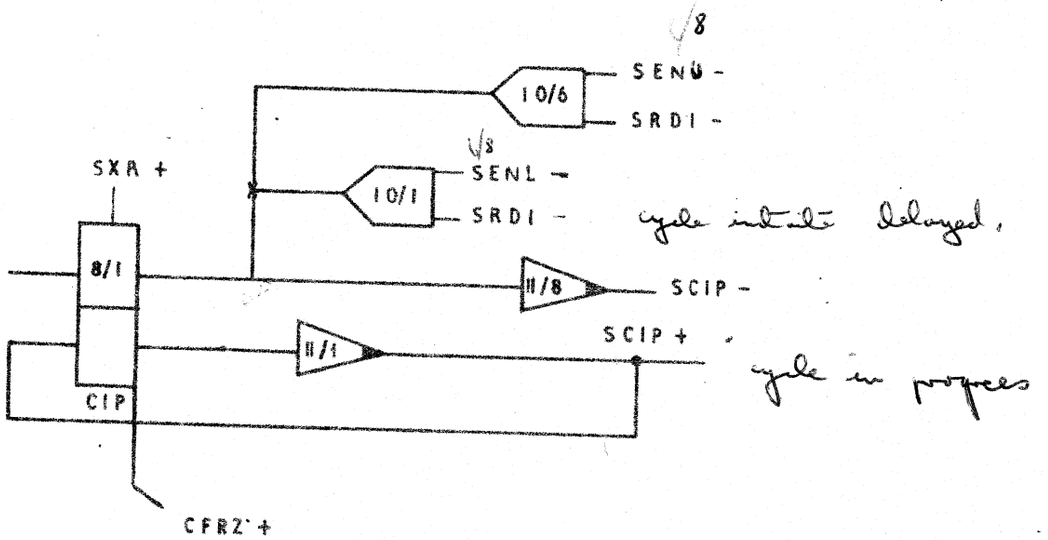

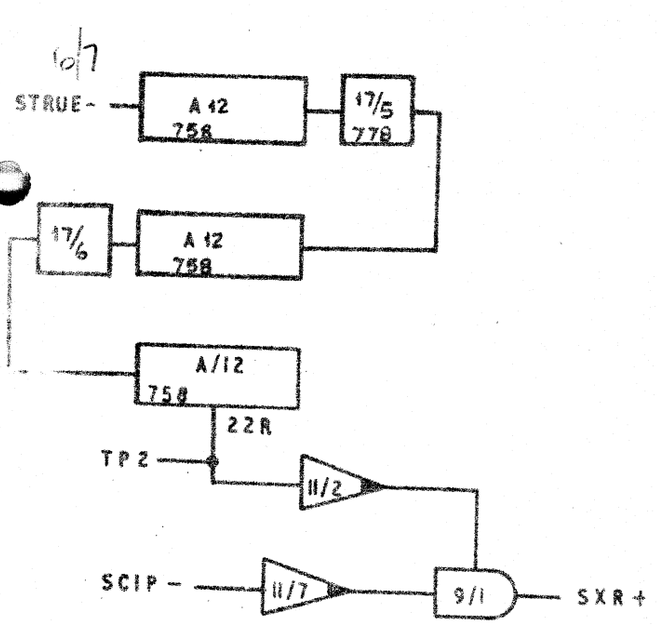

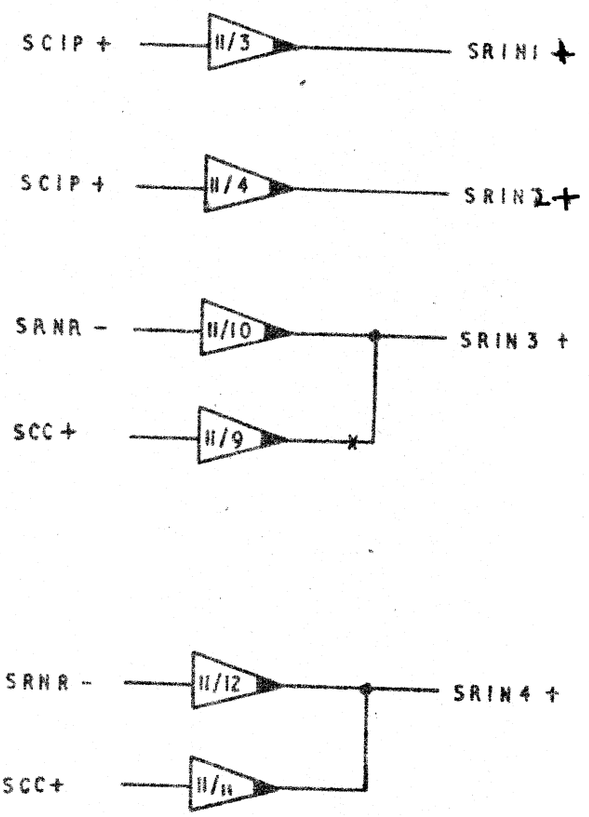

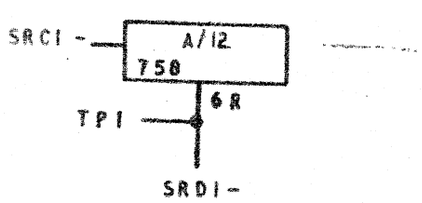

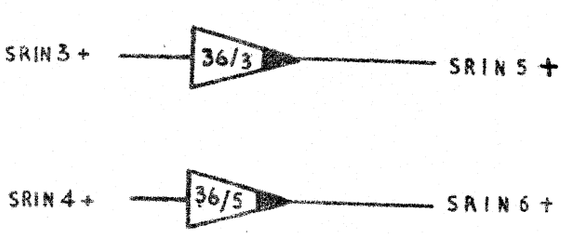

TIMING CONTROL

WGC06/9

SUB	ISS	1	2	3	4									
A.C.W.	0749	0829	0922	1509	1551									
DATE	7/6/67	25/8/67	18/12/67	25/4/68	24/5/68									

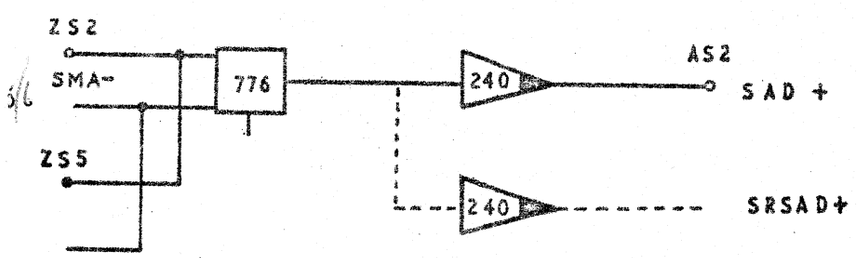

SRSAD	SAD	AS2	240	SMA	ZS2	ZS5	776
	0	2(3)	37/1	0	2(3)	2(3)	27/1
	1	4(5)	37/2	1	4(5)	4(5)	27/2
	2	6(7)	37/3	2	6(7)	6(7)	27/3
	3	8(9)	37/4	3	8(9)	8(9)	27/4
	4	10(11)	37/5	4	10(11)	10(11)	27/5
	5	14(15)	37/6	5	14(15)	14(15)	27/6
	6	16(17)	37/7	6	16(17)	16(17)	27/7
	7	18(19)	37/8	7	18(19)	18(19)	27/8
	8	20(21)	37/9	8	20(21)	20(21)	26/1
	9	22(23)	37/10	9	22(23)	22(23)	26/2
	10	24(25)	37/11	10	24(25)	24(25)	26/3
	11	26(27)	37/12	11	26(27)	26(27)	26/4
	12	28(29)	34/11	12	28(29)	28(29)	26/5
	13	30(31)	36/1	13	30(31)	30(31)	26/6
16			24/3	16	36(37)	36(37)	25/1
17			24/4	17	38(39)	38(39)	25/2
18			24/5	18	40(41)	40(41)	25/3
19			24/6	19	42(43)	42(43)	25/4
20			24/7	20	44(45)	44(45)	25/5
21			24/8	21	46(47)	46(47)	25/6

ADDRESS HIGHWAYS
0 - 13
16 - 21

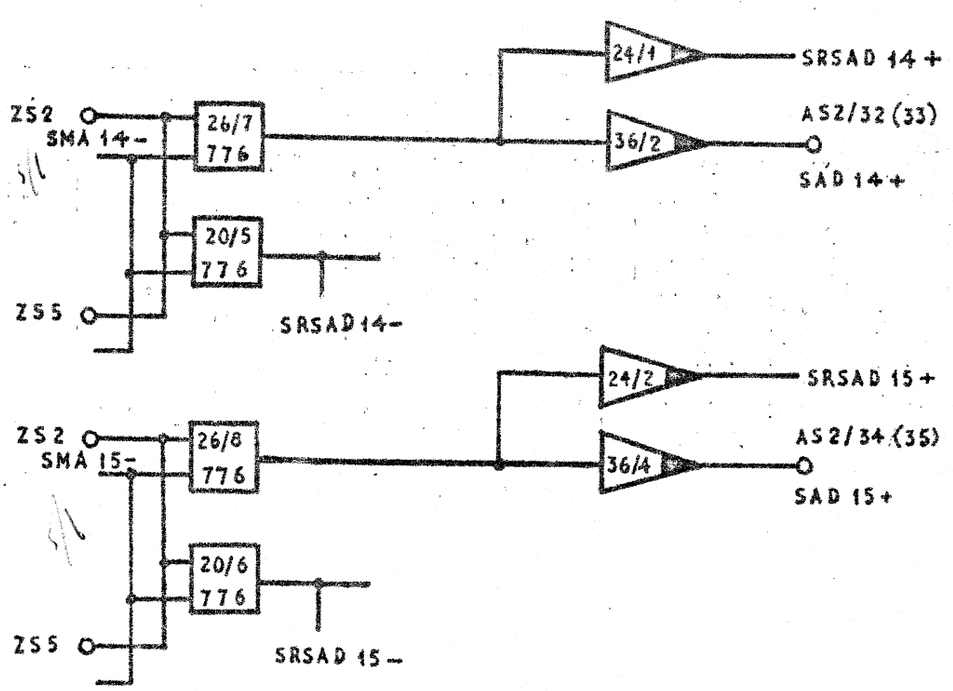

ADDRESS HIGHWAYS WGCØ6/10

SUB	ISS	1													
A.C.W.	0749	0839													

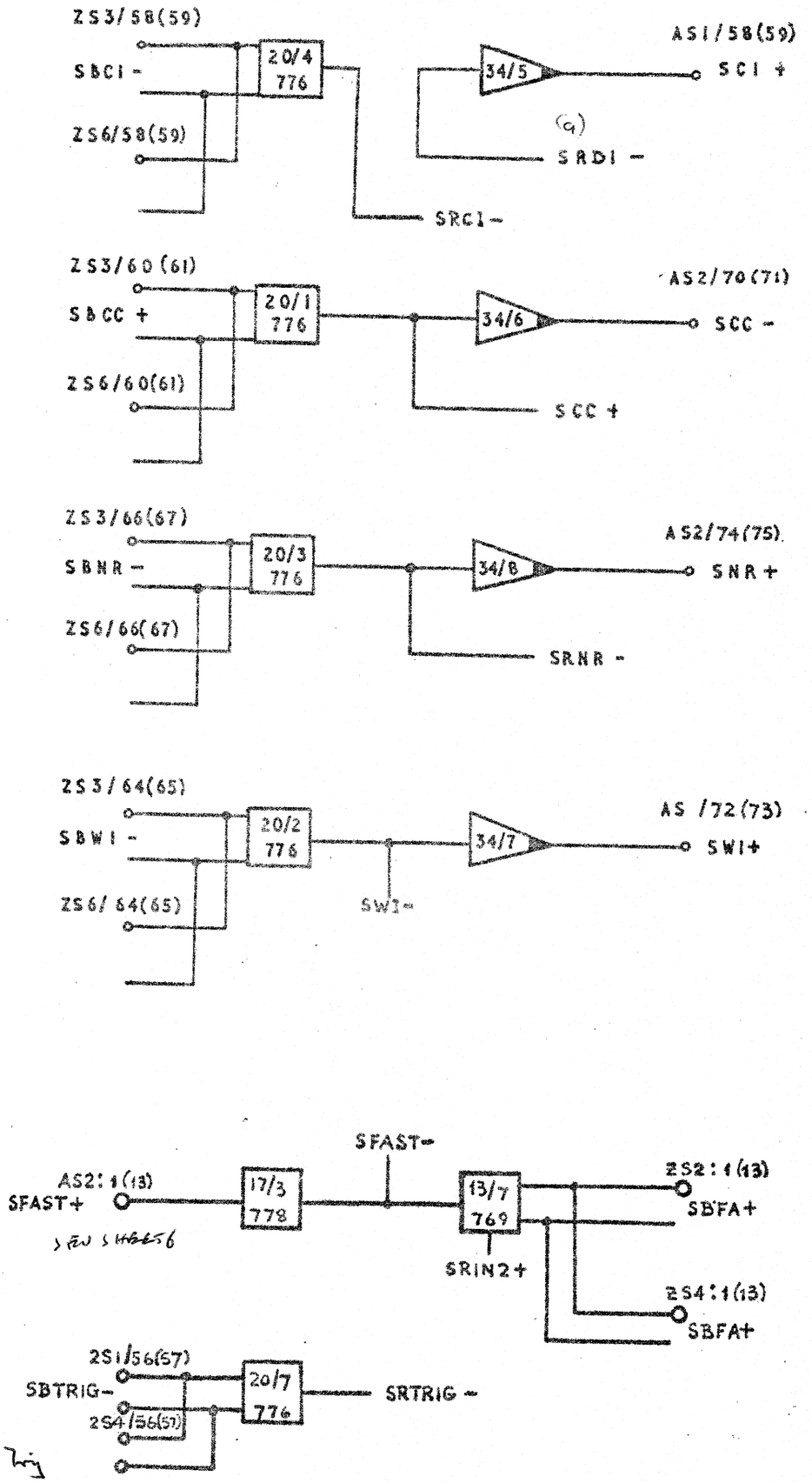

STORE CONTROL

WGCØ6/11

SUB	ISS	1	2	3											
A.C.W.	0749	0829	0922	0935											

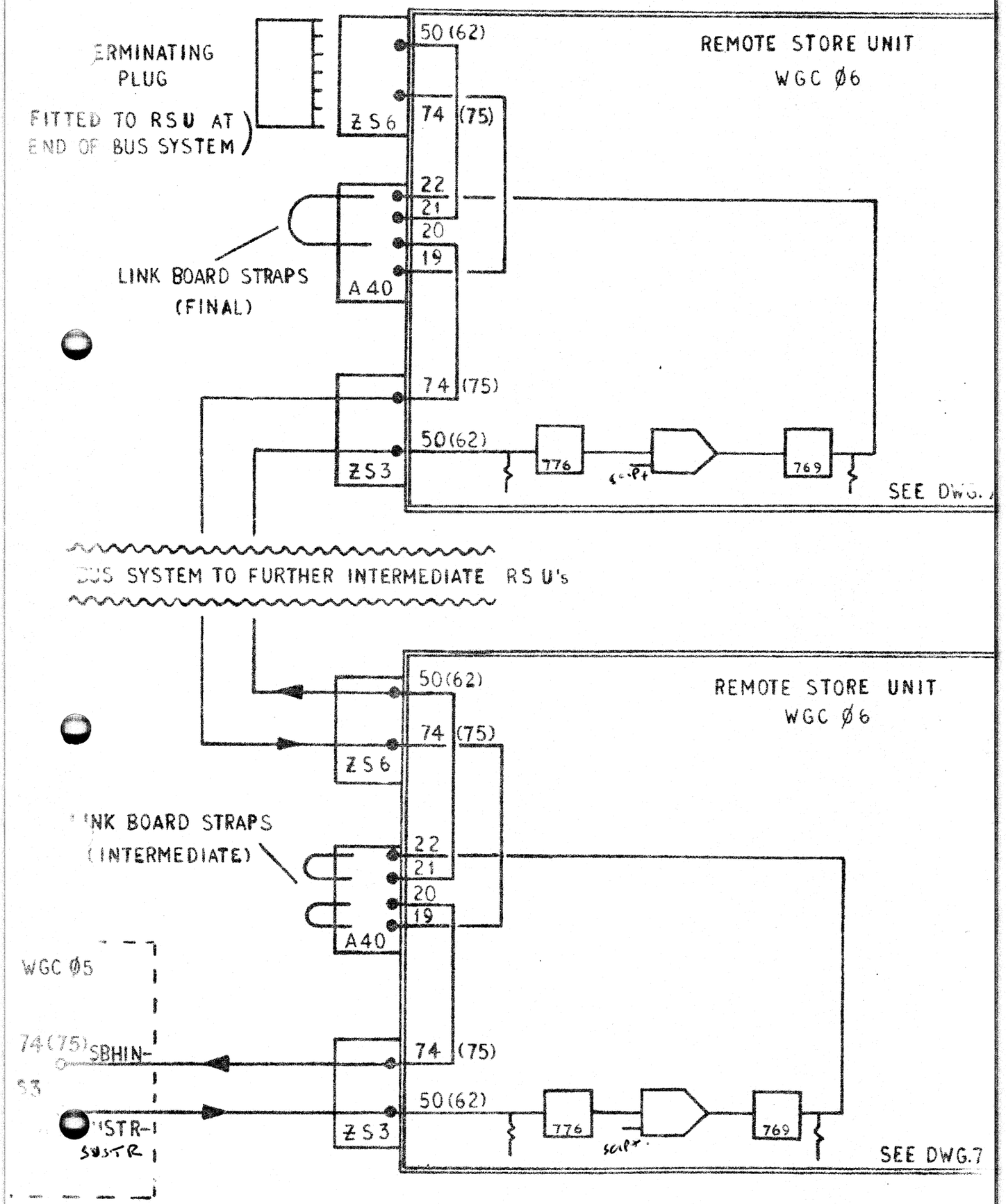

'SINH' SCHEMATIC REMOTE STORES

WGC 06/12

RSU DELAY SETTINGS

(758 POSITION A/12)

SRDI- IT CAN BE SET BY SWITCHING BETWEEN STORES AND OBSERVING THAT CYCLE INITIATE GOES +VE (34/5) AT LEAST 25NS BEFORE ENABLE GOES -VE(28/6). THE NOMINAL SETTING ASSUMES TEN+ HAS BEEN SET CORRECTLY IN WGC Ø4. (SEE DRAWING WGC Ø1/29)

SXR+ THIS DELAY IS TO DETERMINE TRUE END OF CYCLE TIME AND HENCE RESET CYCLE IN PROGRESS STAT (8/1) AT THE RSU.
DO A MANUAL 074 ORDER TO REMOTE STORE, ENSURE THAT EOR AND EOW HAVE BEEN SET UP CORRECTLY.(SEE DRAWING WGC 01/29).
DURING READ CYCLE,DELAY TAP 2 UNTIL SRIN1+ GOES +VE AFTERCYCLE INITIATE (34/5) AFTER A TIME EQUAL TO THE CYCLE TIME OF STORE.
i.e. 650ns FOR LOCKHEED 1.8us FOR PLESSEY/FABRITEK.

NOTE 1. A TRIGGER FOR SCOPE CAN BE PASSED FROM WGC 02 TO WGC 06 BY INSERTING A STATUS SYMBOL IN MP1 WGC 02. AS A RESULT IN WGC 06 ON 20/7 (STRIG-) THE CORRESPONDING WAVEFORM IS AVAILABLE.

NOTE 2. THE SETTING OF EOR FOR REMOTE STORES IS DONE PRECISELY THE SAME AS DESCRIBED FOR BASIC STORE IN WGC 01.
THE SETTING OF EOW IS DONE IN A SIMILAR MANNER TO WGC 01 BY LOOKING AT CYCLE INITIATE(A34/5) AND SOUT Ø (A36/6) IN THE REMOTE STORE UNIT.
IT WILL BE NOTED THAT THE TABLE IN GROUP 1 INDICATES THAT AN END OF WRITE CALLED SFEWU OR SFEWL IS GENERATED BY A REMOTE LOCKHEED.
THIS IS TREATED AND SET UP IN THE MANNER ALSO DESCRIBED IN WGC 01, AGAIN LOOKING IN WGC 06 FOR RELEVENT WAVEFORMS.

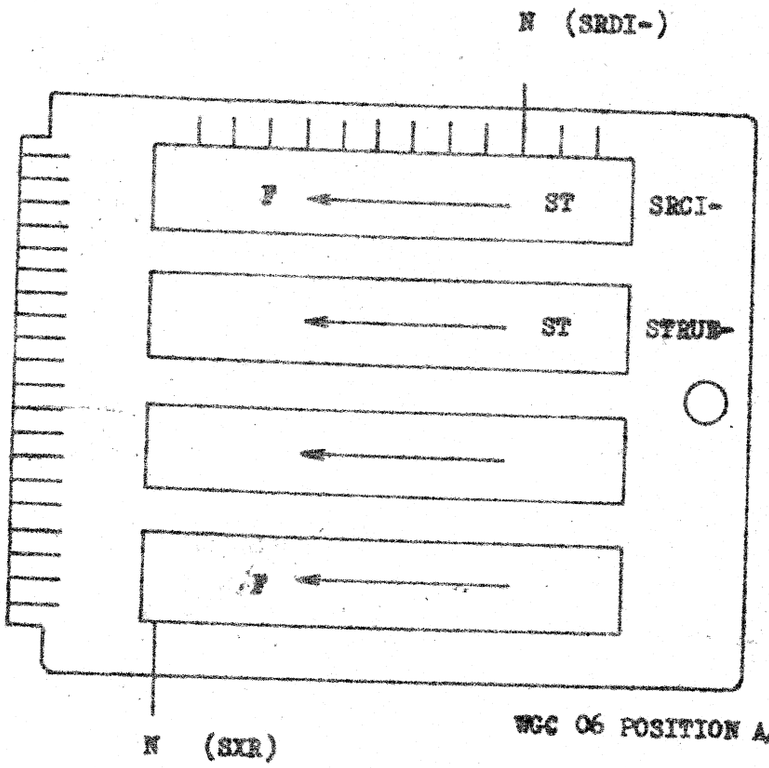

WGC 06 POSITION A/12

N = NOMINAL

SUB	155			
ACW	1551			
ACD				
DATE	20.10.68			