INDEX OF LOGICAL DRAWINGS FOR WGC.02 DATA FLOW

DRAWING	TITLE
00o	Stats Slice
00₁	Gates Slice
01o	Stats Slice
01₁	Gates Slice
02o	Stats Slice
02₁	Gates Slice
03o	Stats Slice
03₁	Gates Slice
04o	Stats Slice
04₁	Gates Slice
05o, 05₁	Gates Slice & State
06o	Stats Slice
06₁	Gates Slice
07o	Stats Slice
07₁	Gates Slice
08o	Stats Slice
08₁	Gates Slice
09o	Stats Slice
09₁	Gates Slice
10o	Stats Slice
10₁	Gates Slice
11o	Stats Slice
11₁	Gates Slice
12o	Stats Slice
12₁	Gates Slice
13o	Stats Slice
13₁	Gates Slice
14o	Stats Slice
14₁	Gates Slice
15o	Stats Slice
15₁	Gates Slice
16o	Stats Slice
16₁	Gates Slice
17o	Stats Slice
17₁	Gates Slice
18o	Stats Slice
18₁	Gates Slice
19o	Stats Slice
19₁	Gates Slice
20o	Stats Slice
20₁	Gates Slice
21o	Stats Slice
21₁	Gates Slice
22o	Stats Slice
22₁	Gates Slice
23o	Stats Slice
23₁	Gates Slice

DRAWING	TITLE
24	Mill Slice & P. Register
25	Carry Gates to C22
26	Overflow Gates to C23
27	Cybo & Blockcarry
28	Block Carry
29	Block Carry
30	Parity Bit Stage 1
31	Parity Bit Stage 1
32	Parity Bit Stage 2 & 3
33	Parity Fail, RB24 & Gates
34	N Count Gates
35	N Count Gates
36	N Register Gates
37	Character Register
38	X Register Gates & Decode
39	Datum Register & Res. Check
40	Datum Register & Res. Check
41	Datum Register & Res. Check
42	Limit Register & Res. Check
43	Limit Register & Res. Check
44	Limit Register & Res. Check
45	G Register Bits 0-5
46	G Register Bits 6-9
47	Mill Tests
48	Mill Tests
49	Sad < 8 Test
50	K, 074 & ZS Tests
51o 51₁	General Tests
52	Function Gates
53	Illegal Op. & Mon.Mode States
54	ZS & A Stats
55	Store PAC & ACC Control
56o 56₁ 56₂	Store Enable
56₃ 56₄ 56₅	Store Enable
56₆ 56₇	Link Packages.
57	Spec. Register 64
58	Spec. Register 65, 129
59	Mill Timer
60	Sad Field Decode
61	K Field Decode
62	L Field Decode
63	Q In Field Decode
64	Q Out Field Decode
65	Q Out Field Decode
66	Q Out Field Decode
67	Misc. Field Decode
68	Misc. Field Decode
69	Misc. Field Decode
70	Clock Generation

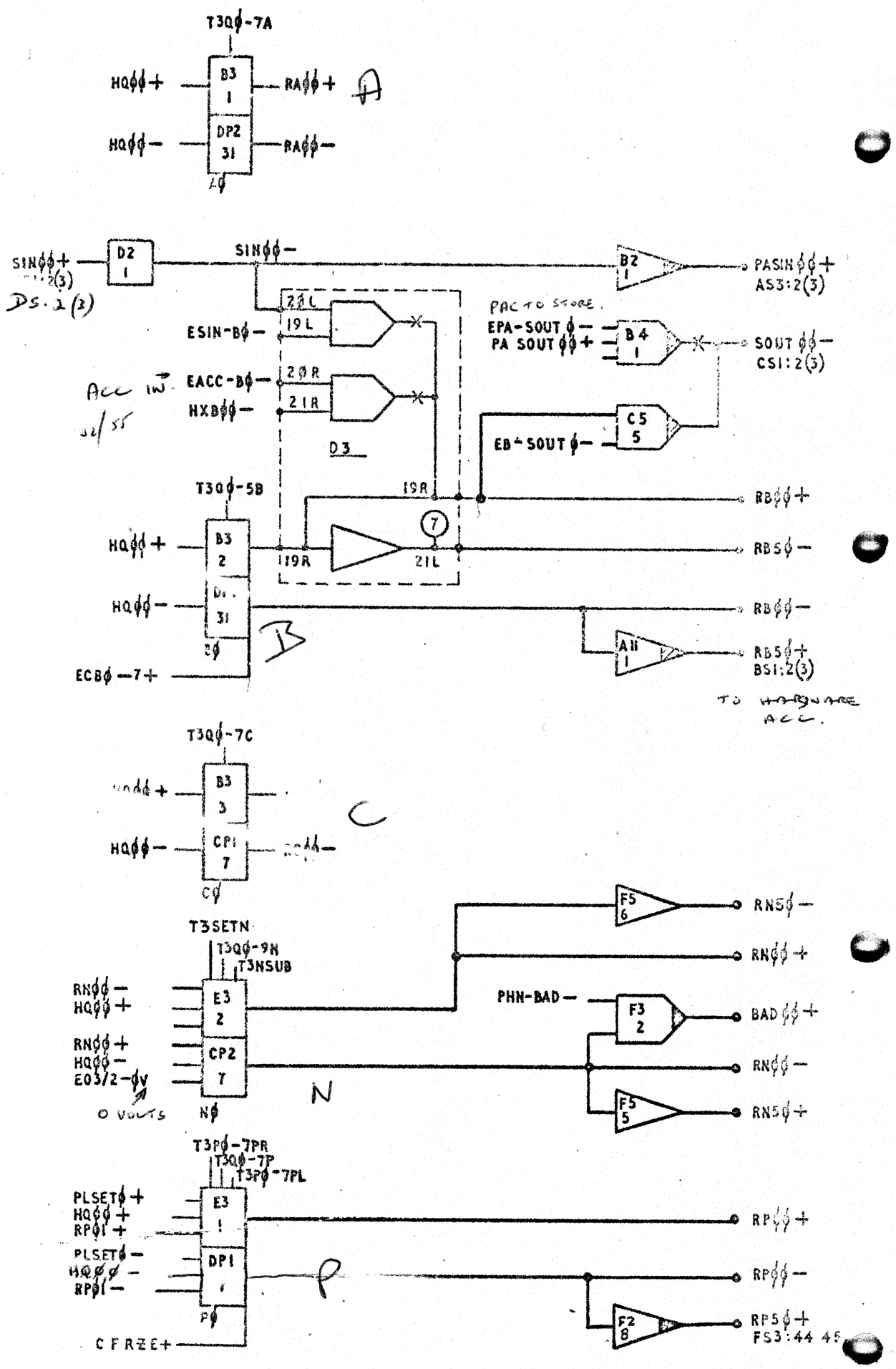
T3Q0-7A
HQ00+
B3 1
RA00+
A
HQ00-
DP2 31
RA00-
SIN00+
D2 1
SIN00-
B2 1
PASIN00+
AS3:2(3)
20L
19L
ESIN-B0-
PAC TO STORE.
EPA-SOUT 0-
PA SOUT 00+
B4 1
SOUT 00-
CS1:2(3)
EACC-B0-
20R
21R
HXB00-
D3
C5 5
EB-SOUT 0-
T3Q0-5B
19R
RB00+
HQ00+
B3 2
7
RB50-
HQ00-
RB00-
A11 1
RB50+
BS1:2(3)
ECB0-7+
B
TO ACC.
T3Q0-7C
HQ00+
B3 3
C
HQ00-
CP1 7
C0
T3SETN
T3Q0-9N
T3NSUB
RN00-
HQ00+
E3 2
RN50-
RN00+
PHN-BAD-
F3 2
BAD 00+
RN00+
HQ00-
E03/2-0V
CP2 7
RN00-
RN50+
0 VOLTS
N0
N
T3P0-7PR
T3Q0-7P
T3P0-7PL
PLSET0+
HQ00+
RP01+
E3 1
RP00+
PLSET0-
HQ00-
RP01-
DP1 1
P
RP00-
F2 8
RP50+
FS3:44 45
CFRZE+

ISS													
0827													

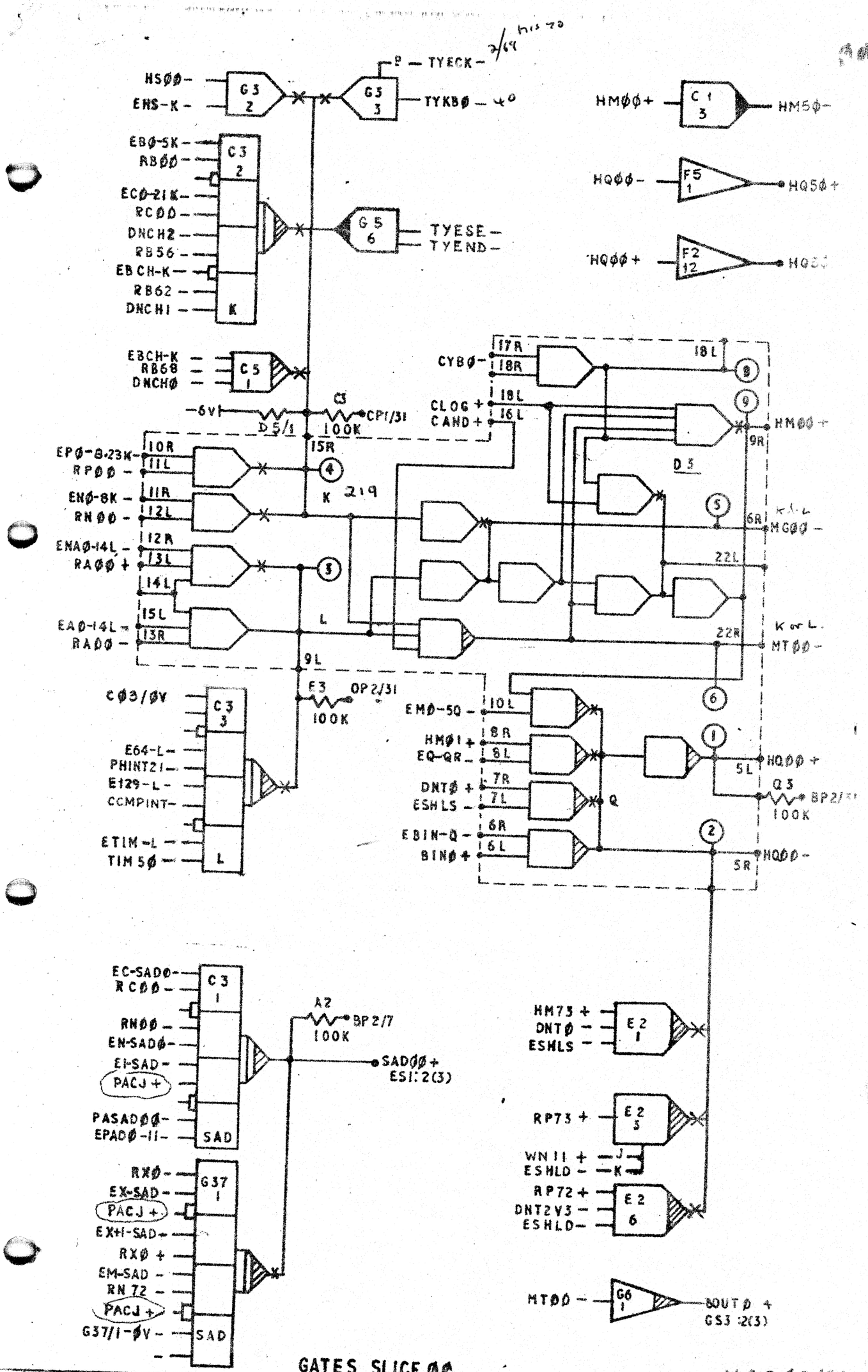

GATES SLICE ØØ

W.G.C.Ø2/ØØ

SUB.	ISS	1	2
ACW	0827	0894	0930
DATE	25/8/67	14/11/67	2/1/68

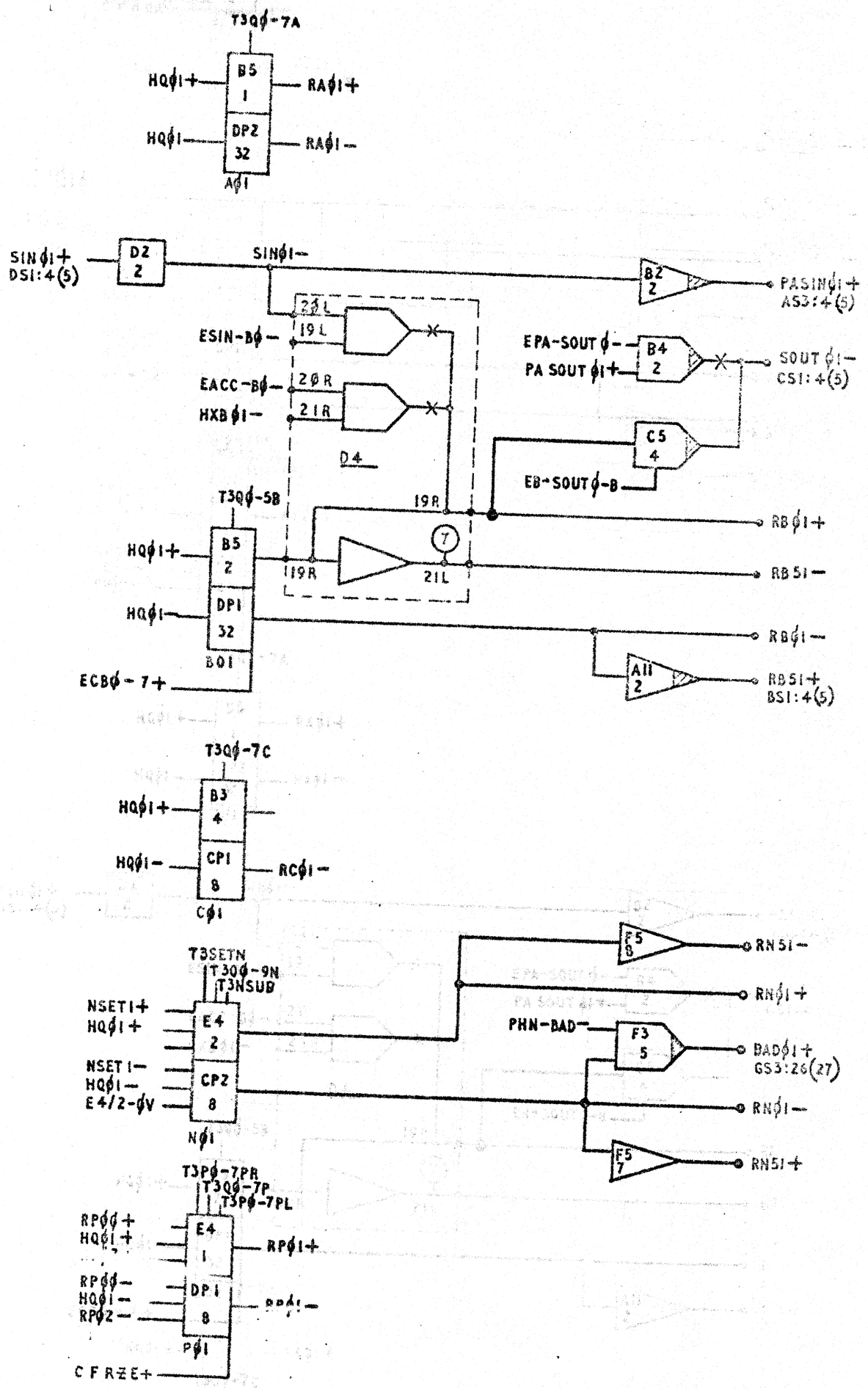

C. 02/ϕ1ϕ

SUB	ISS												
C.C.V.	0827												

STATS. SLICE.

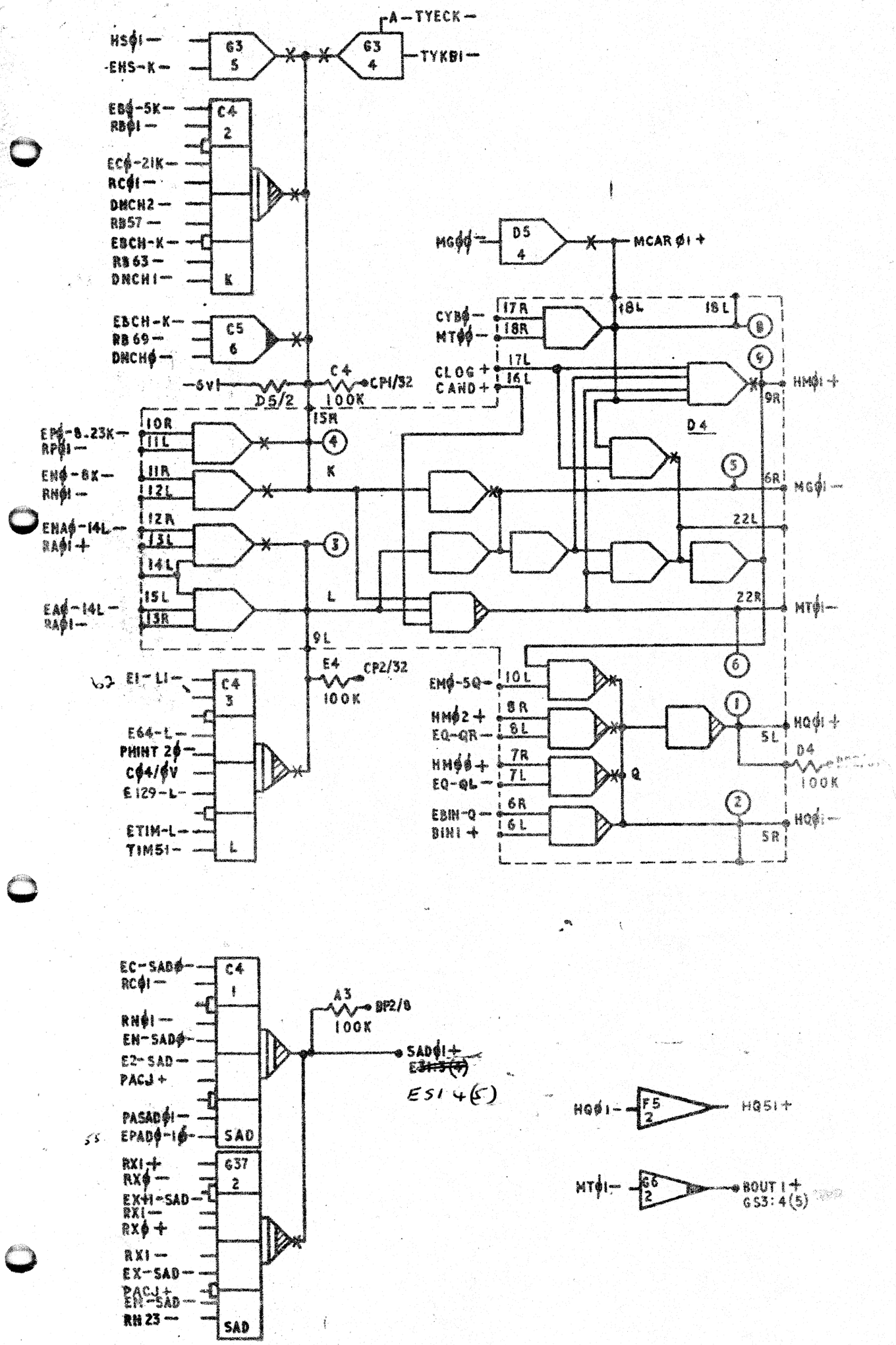

GATES SLICE ØI

W.G.C.Ø2/Ø

	ISS	1	2										

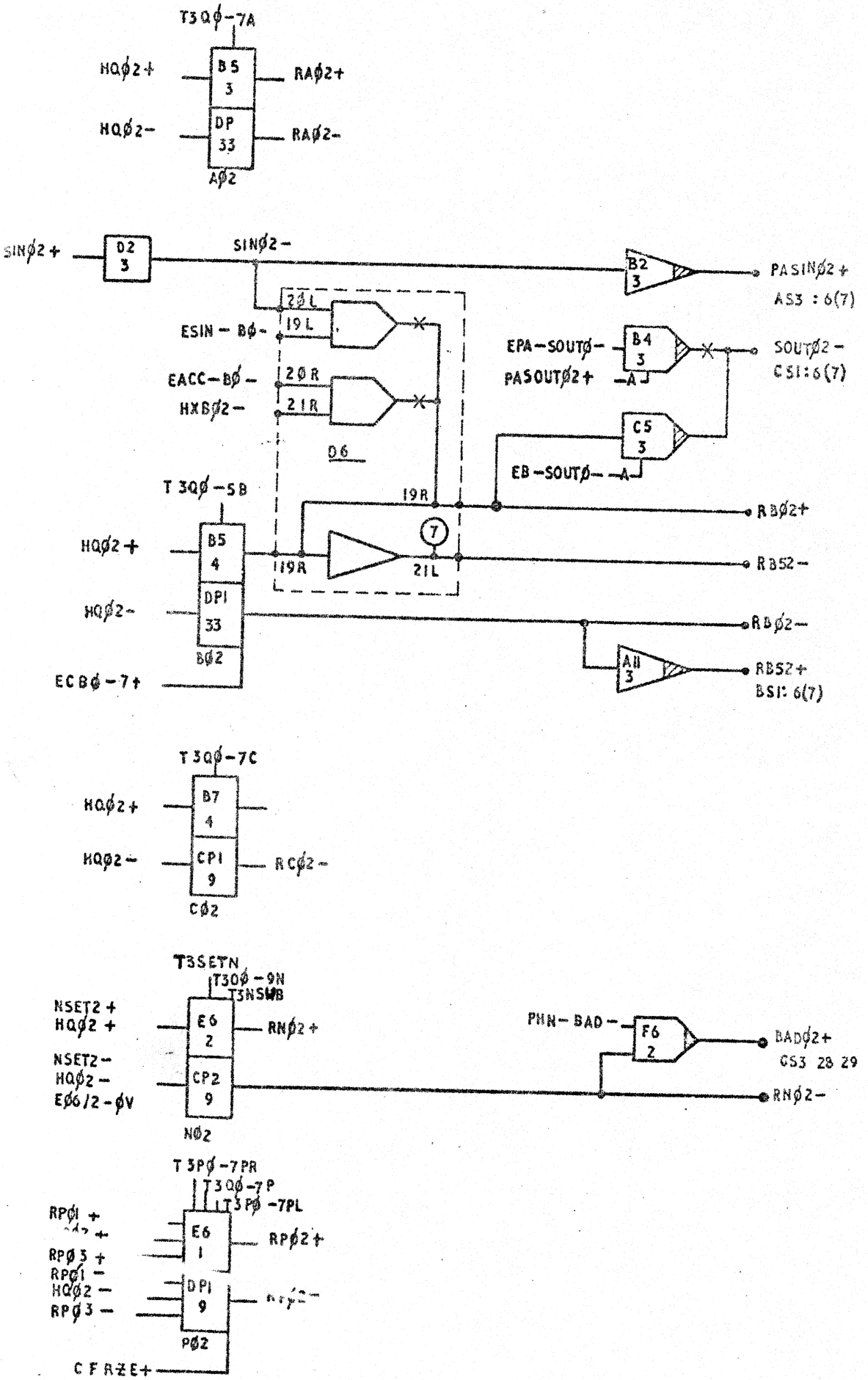

W.S.C. Ø2/02Ø

STATS SLICE 2

SUB	ISS
A.C.W.	0827

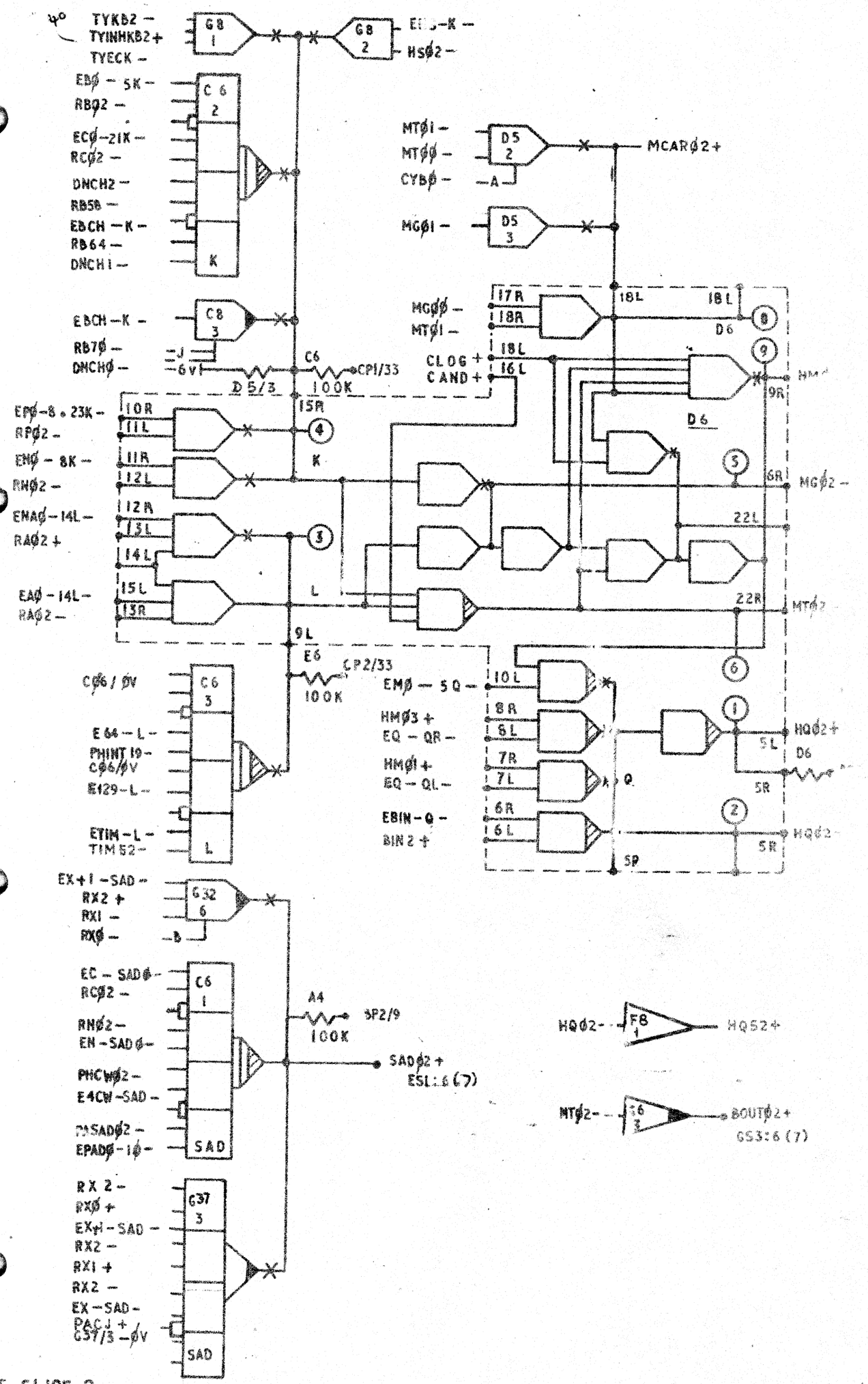

GATES SLICE 2

W.G.C. Ø2/02

SUB.	ISS	1	2

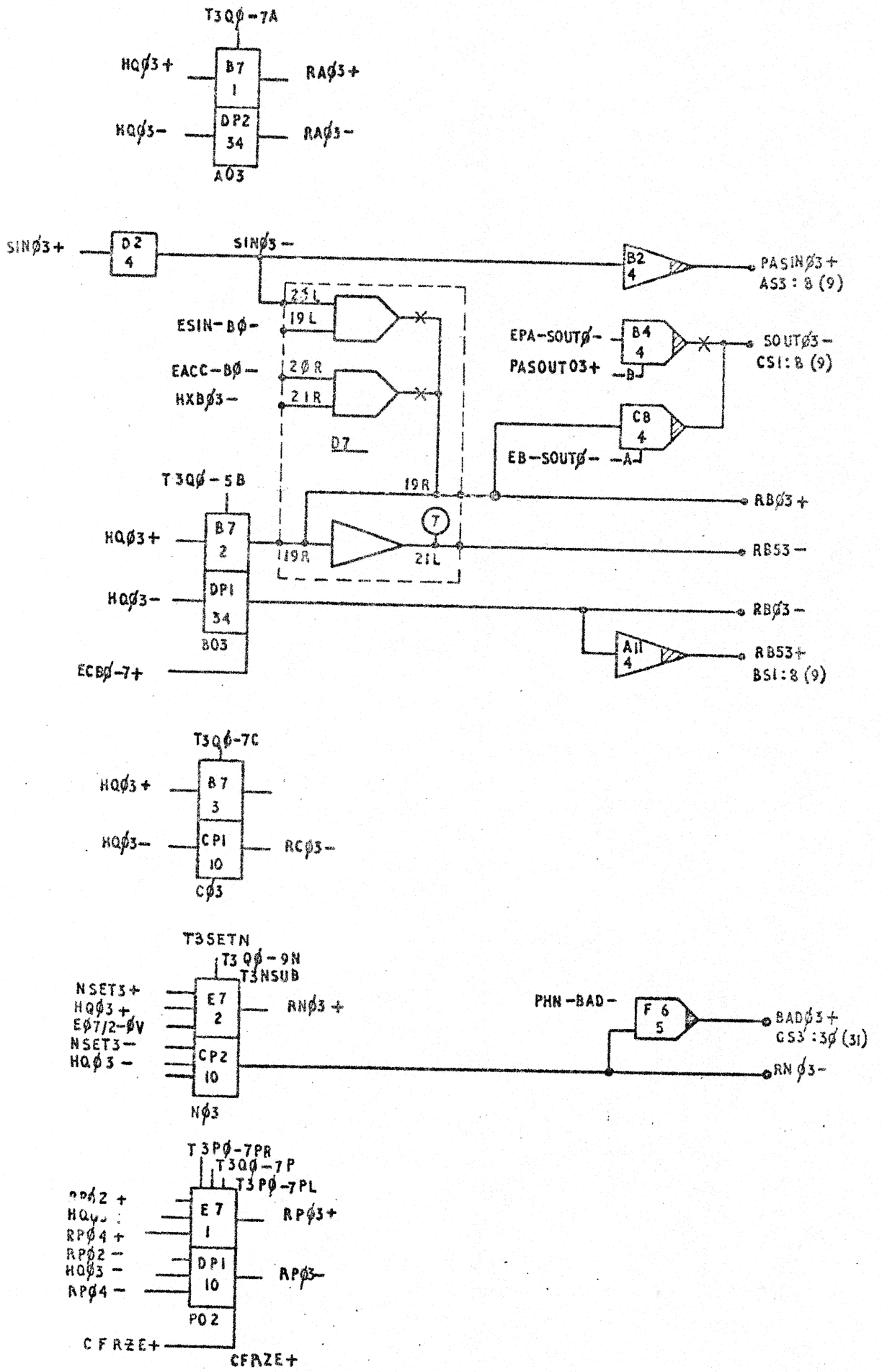
T3QØ-7A
HQØ3+
B7
1
RAØ3+
HQØ3-
DP2
34
RAØ3-
A03
SINØ3+
D2
4
SINØ3-
B2
4
PASINØ3+
AS3:8 (9)
23L
19L
ESIN-BØ-
EACC-BØ-
20R
21R
HXBØ3-
D7
EPA-SOUTØ-
PASOUT03+
B4
4
B
SOUTØ3-
CS1:8 (9)
C8
4
A
EB-SOUTØ-
T3QØ-5B
19R
RBØ3+
HQØ3+
B7
2
119R
7
21L
RBS3-
HQØ3-
DP1
34
B03
RBØ3-
A11
4
RBS3+
BS1:8 (9)
ECBØ-7+
T3QØ-7C
HQØ3+
B7
3
HQØ3-
CP1
10
RCØ3-
CØ3
T3SETN
T3QØ-9N
T3NSUB
NSET3+
HQØ3+
EØ7/2-ØV
NSET3-
HQØ3-
E7
2
RNØ3+
CP2
10
NØ3
PHN-BAD-
F6
5
BADØ3+
GS3:3Ø (31)
RNØ3-
T3PØ-7PR
T3QØ-7P
T3PØ-7PL
RPØ2+
HQØ3+
RPØ4+
RPØ2-
HQØ3-
RPØ4-
E7
1
RPØ3+
DP1
10
RPØ3-
PO2
CFRZE+
CFRZE+

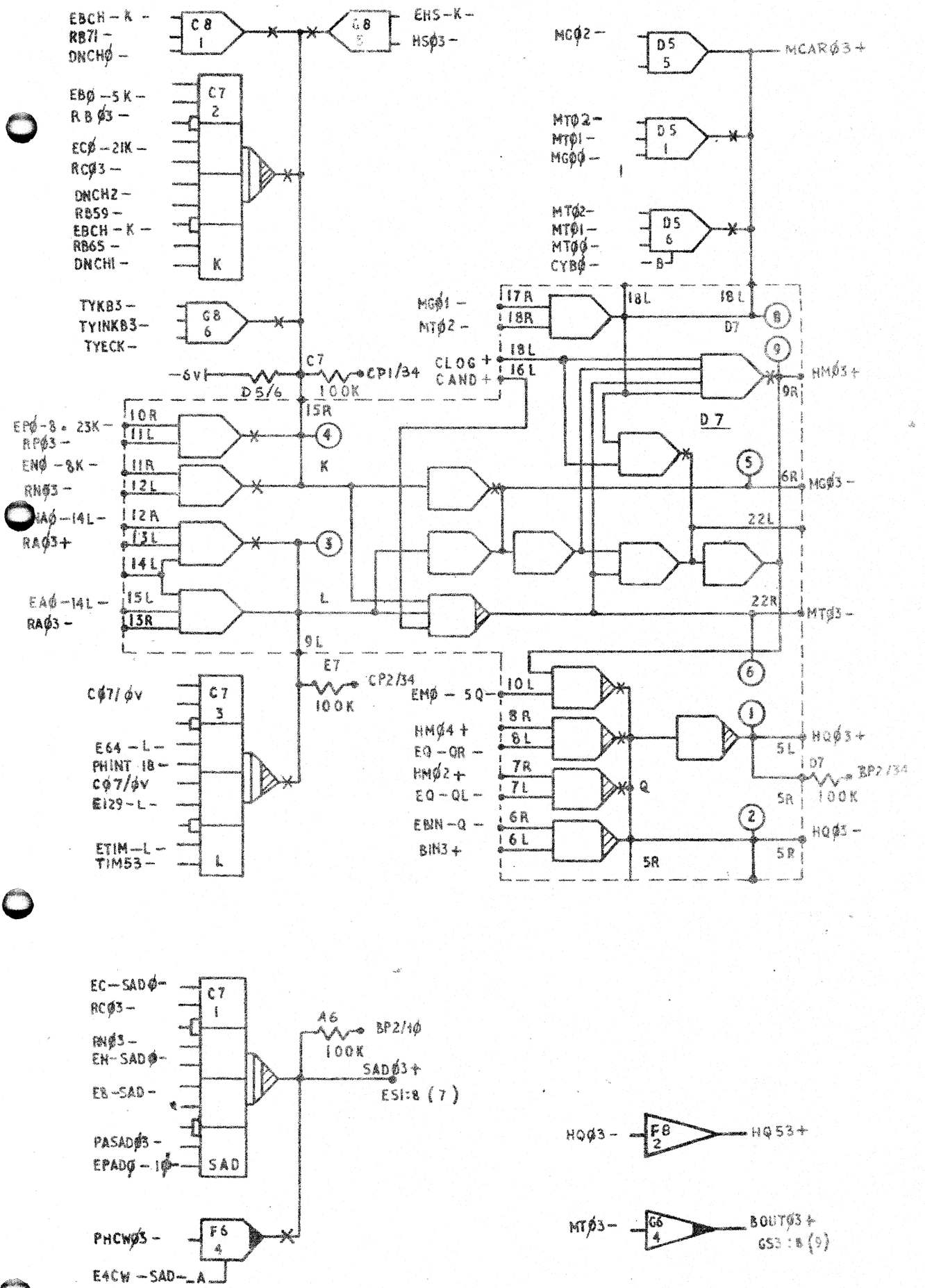

GATES SLICE 3. W.G.C.Ø2/03.

SUB.	1SS	1	2												
A.C.W.	0827	1527	1565												
DATE	25/8/67	28/6/68	30/9/68												

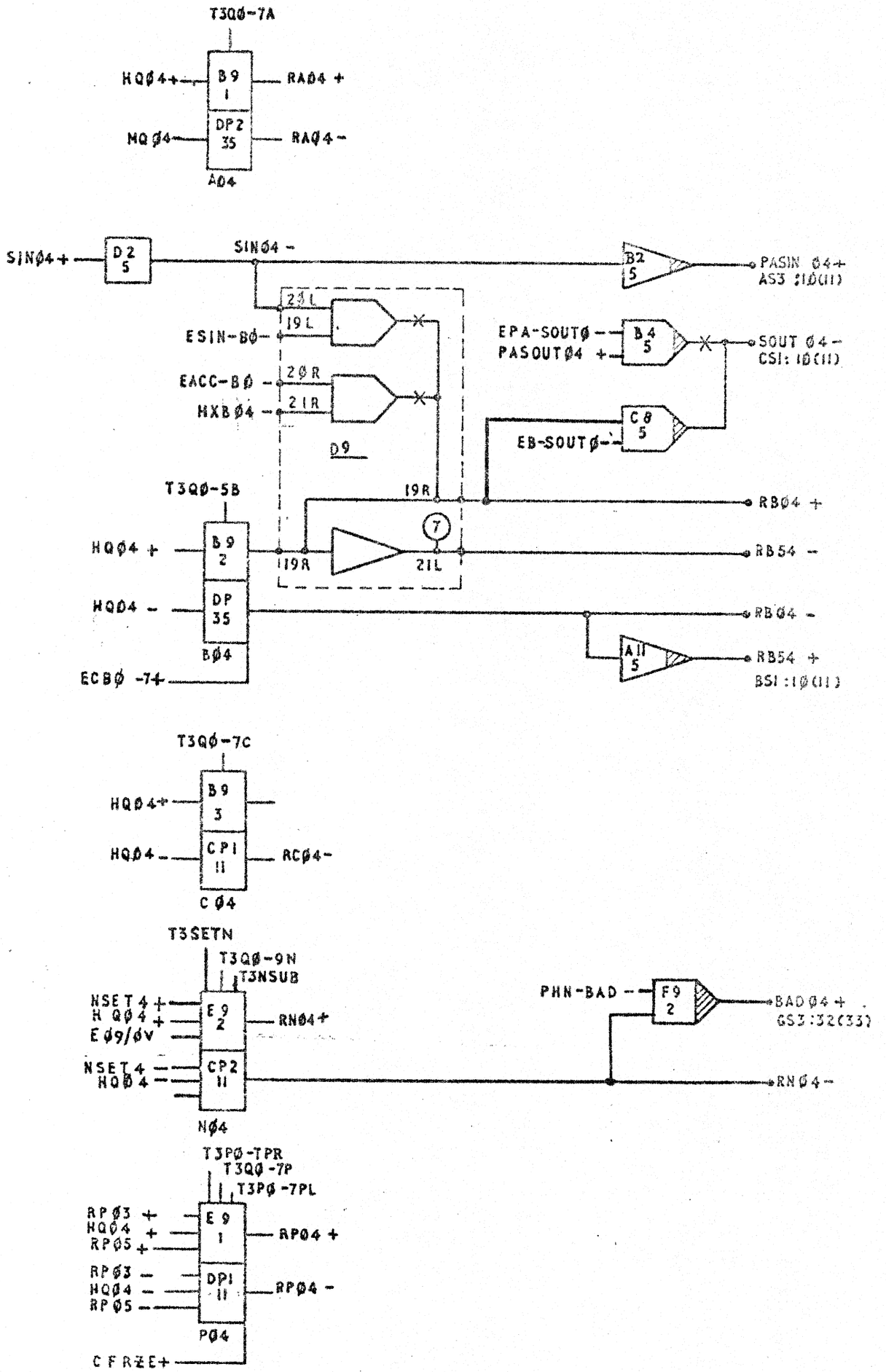

W.G.C. Ø2/Ø4Ø

STATS. SLICE 4

SUB	1SS														
A.C.W.	0827														

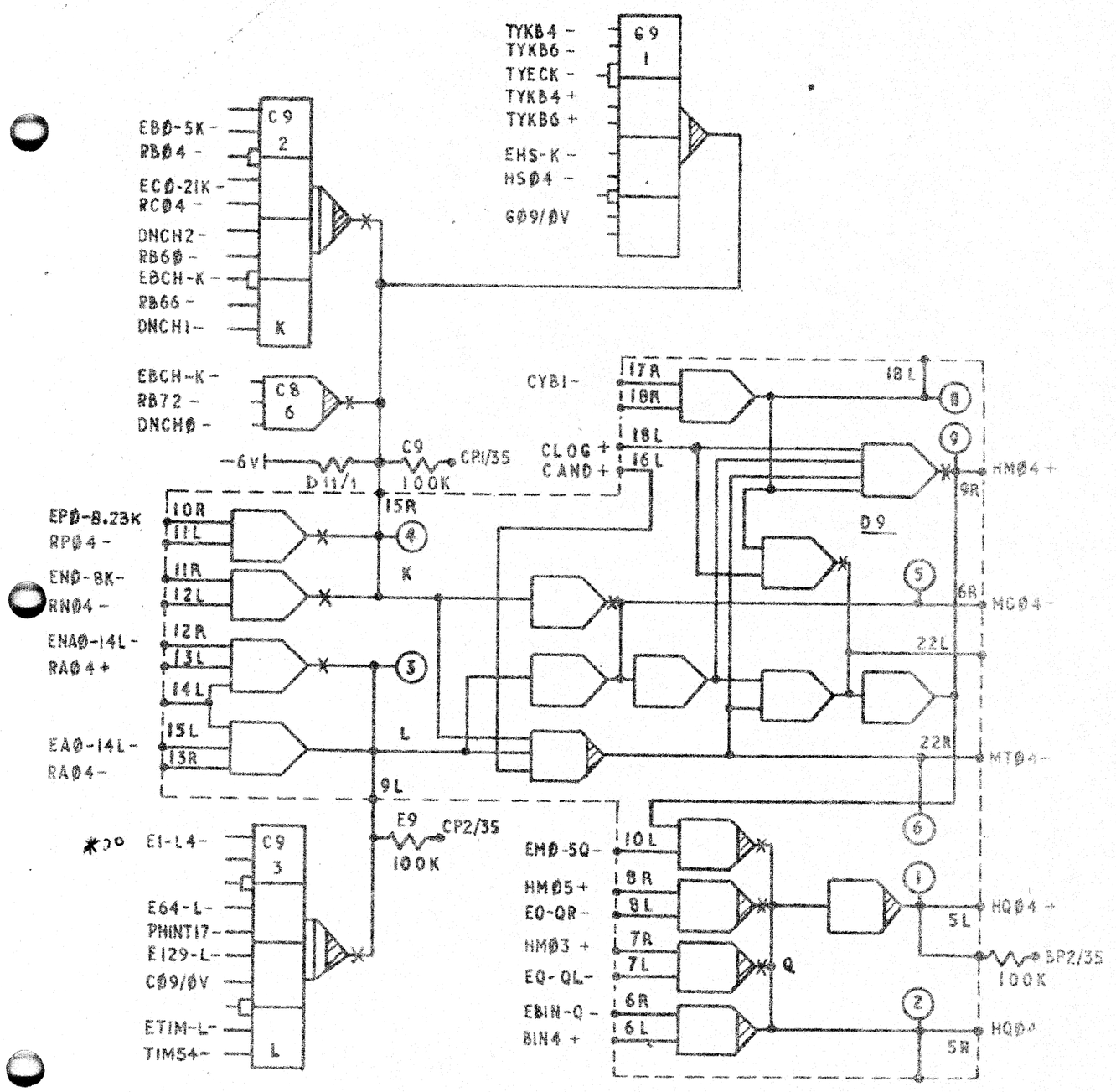
TYKB4 -
TYKB6 -
TYECK -
TYKB4 +
TYKB6 +
EHS-K -
HSØ4 -
GØ9/ØV
G9
1
EBØ-5K -
RBØ4 -
ECØ-21K -
RCØ4 -
DNCH2 -
RB6Ø -
EBCH-K -
RB66 -
DNCH1 -
C9
2
K
EBCH-K -
RB72 -
DNCHØ -
C8
6
-6V
D11/1
C9
100K
CP1/35
CYB1 -
CLOG +
CAND +
17R
16R
18L
16L
18L
8
9
HMØ4 +
9R
D9
EPØ-8.23K
RPØ4 -
ENØ-8K-
RNØ4 -
ENAØ-14L -
RAØ4 +
EAØ-14L -
RAØ4 -
10R
11L
11R
12L
12R
13L
14L
15L
13R
15R
4
K
3
L
9L
5
6R
MCØ4 -
22L
22R
MTØ4 -
6
E9
100K
CP2/35
*20
E1-L4 -
C9
3
E64-L -
PHINT17 -
E129-L -
CØ9/ØV
ETIM-L -
TIM54 -
L
EMØ-5Q -
HMØ5 +
EQ-QR -
HMØ3 +
EQ-QL -
EBIN-Q -
BIN4 +
10L
8R
8L
7R
7L
6R
6L
Q
1
5L
HQØ4 +
BP2/35
100K
2
5R
HQØ4
EC-SADØ -
RCØ4 -
RNØ4 -
EN-SADØ -
PHCWØ4 -
E4CW-SAD -
PASADØ4 -
EPADØ-1Ø -
C9
1
SAD
A7
100K
BP2/11
SADØ4 +
ES1:1Ø (11)
HQØ4 -
F11
1
HQS4 +
MTØ4 -
G12
1
BOUTØ4 +
GS3:1Ø (11)

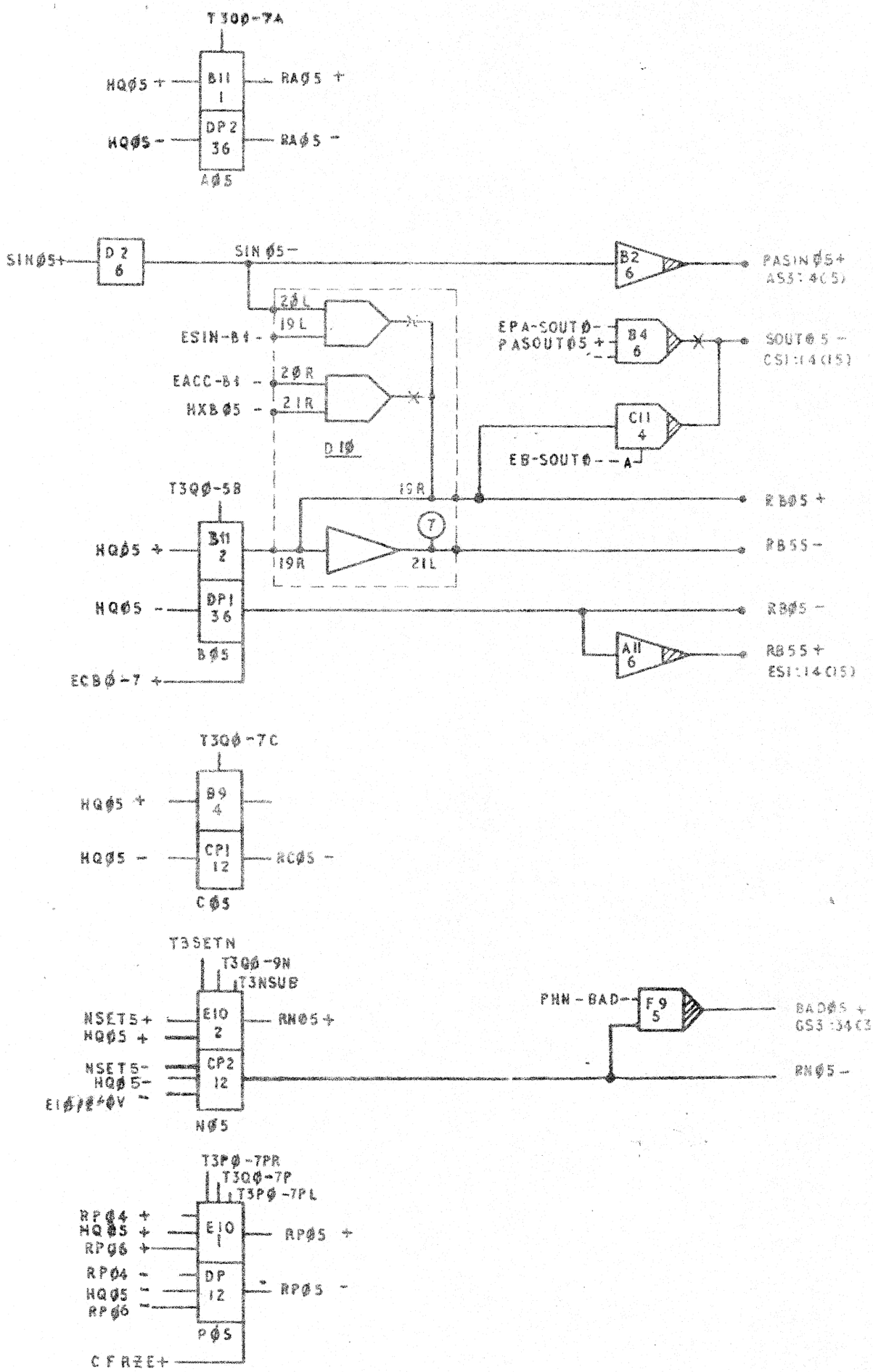

W.G.C. Ø2/Ø5Ø

STATS. SLICE 5

SUB	ISS	1													
A.C.W.	0827	1565													
DATE	25/8/67	30/9/68													

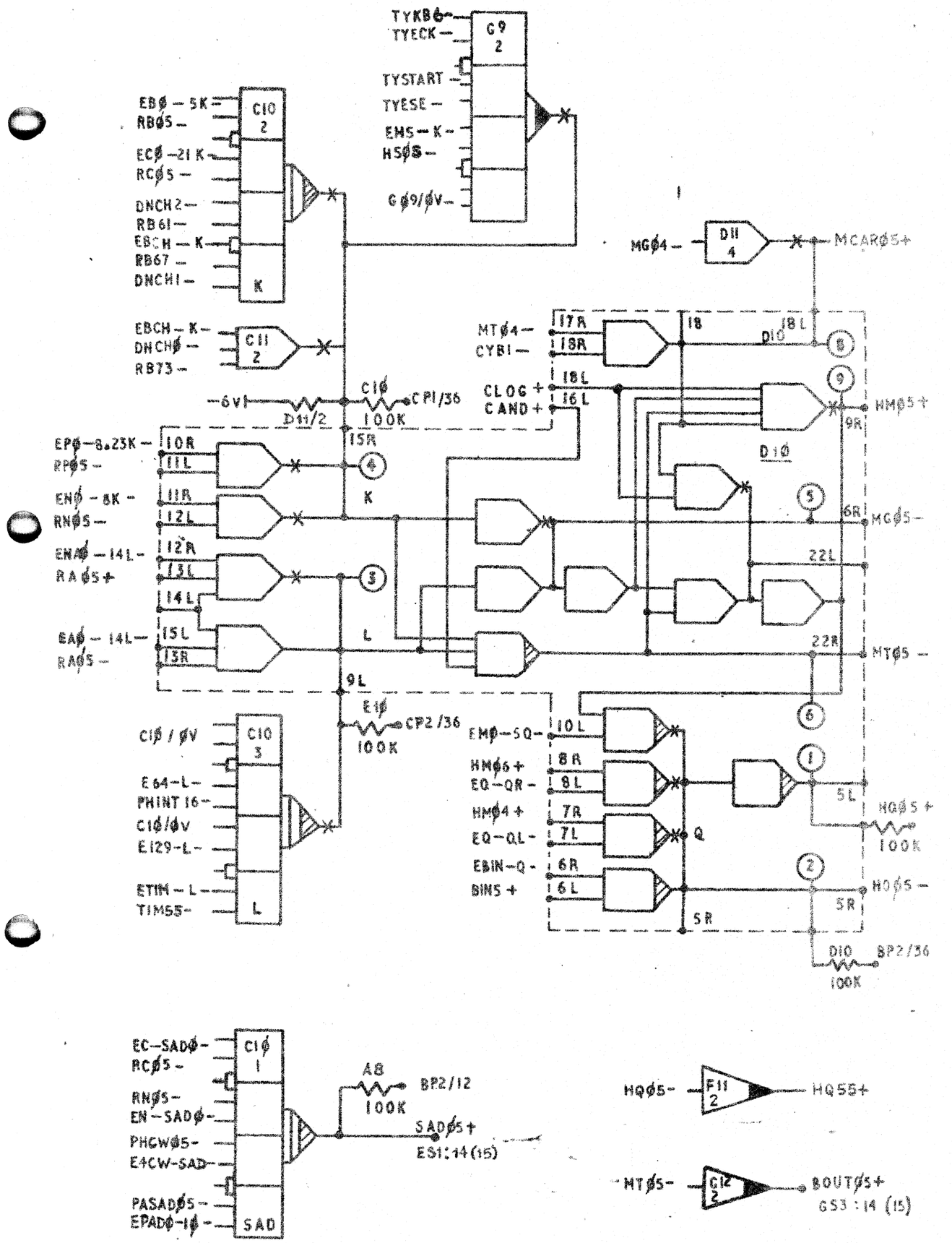
TYKBØ-
TYECK-
G9
2
TYSTART-
TYESE-
EMS-K-
HSØS-
GØ9/ØV-
EBØ-5K-
RBØ5-
ECØ-21K-
RCØ5-
DNCH2-
RB61-
EBCH-K-
RB67-
DNCH1-
C10
2
K
EBCH-K-
DNCHØ-
RB73-
C11
2
MGØ4-
D11
4
MCARØ5+
MTØ4-
CYB1-
17R
18R
18
D10
18L
8
CLOG+
CAND+
18L
16L
9
HMØ5+
9R
-6V1
D11/2
C1Ø
100K
CP1/36
15R
EPØ-8.23K-
RPØ5-
10R
11L
4
K
ENØ-8K-
RNØ5-
11R
12L
5
6R
MGØ5-
ENØ-14L-
RAØ5+
12R
13L
3
22L
14L
EAØ-14L-
RAØ5-
15L
13R
L
22R
MTØ5-
9L
6
E1Ø
100K
CP2/36
C1Ø/ØV
C10
3
E64-L-
PHINT16-
C1Ø/ØV
E129-L-
ETIM-L-
TIM55-
L
EMØ-SQ-
10L
HMØ6+
EQ-QR-
8R
8L
1
5L
HMØ4+
EQ-QL-
7R
7L
Q
HQØ5+
100K
EBIN-Q-
BINS+
6R
6L
2
HOØ5-
5R
SR
D10
100K
BP2/36
EC-SADØ-
RCØ5-
C1Ø
1
RNØ5-
EN-SADØ-
PHCWØ5-
E4CW-SAD-
PASADØ5-
EPADØ-1Ø-
SAD
A8
100K
BP2/12
SADØ5+
ES1:14(15)
HQØ5-
F11
2
HQ55+
MTØ5-
G12
2
BOUTØ5+
GS3:14 (15)

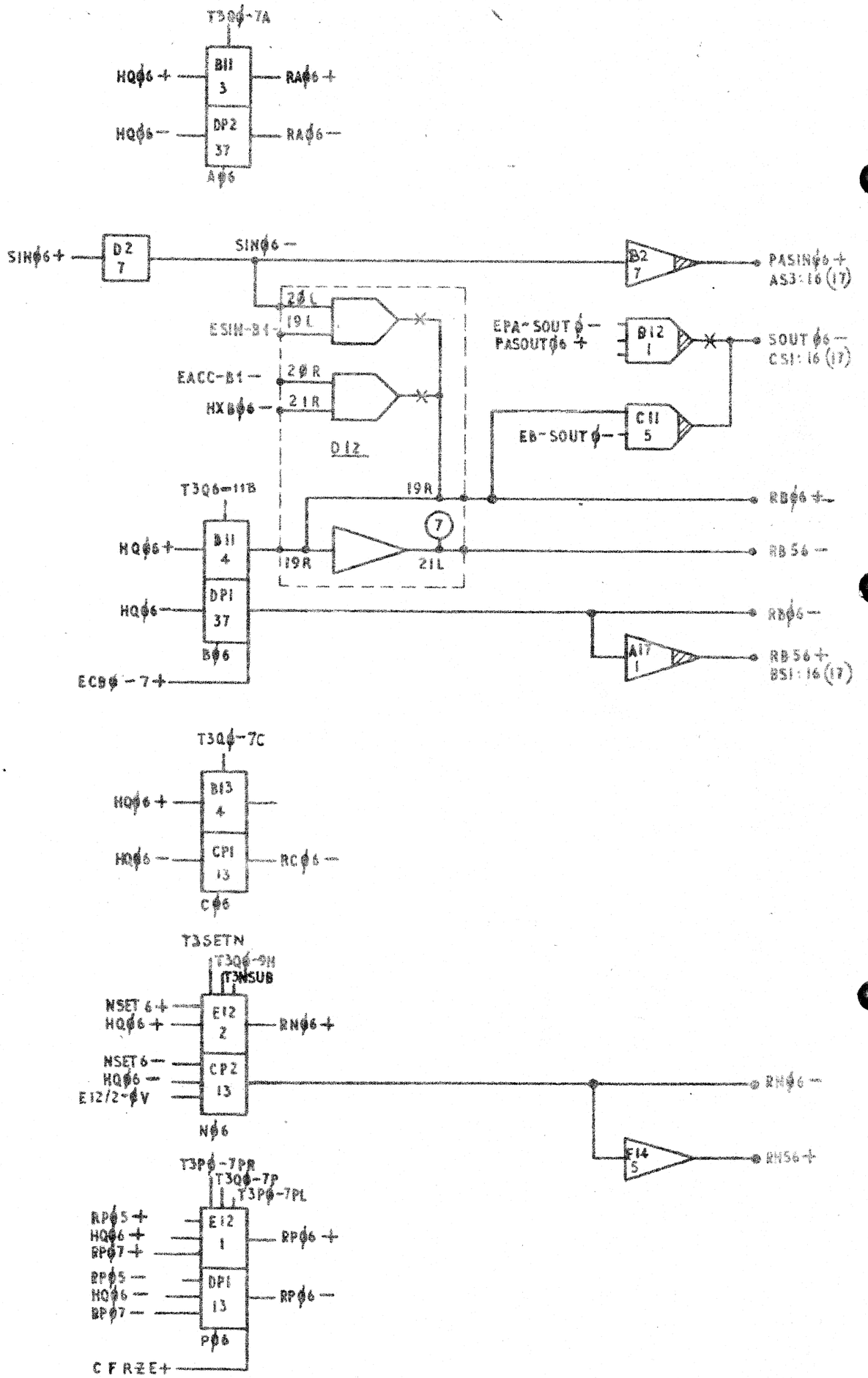

W.G.C. 02/06

STATS. SLICE 6.

SUB	1SS	1													
A.C.W.	0827	1565													
DATE	25/8/67	30/9/68													

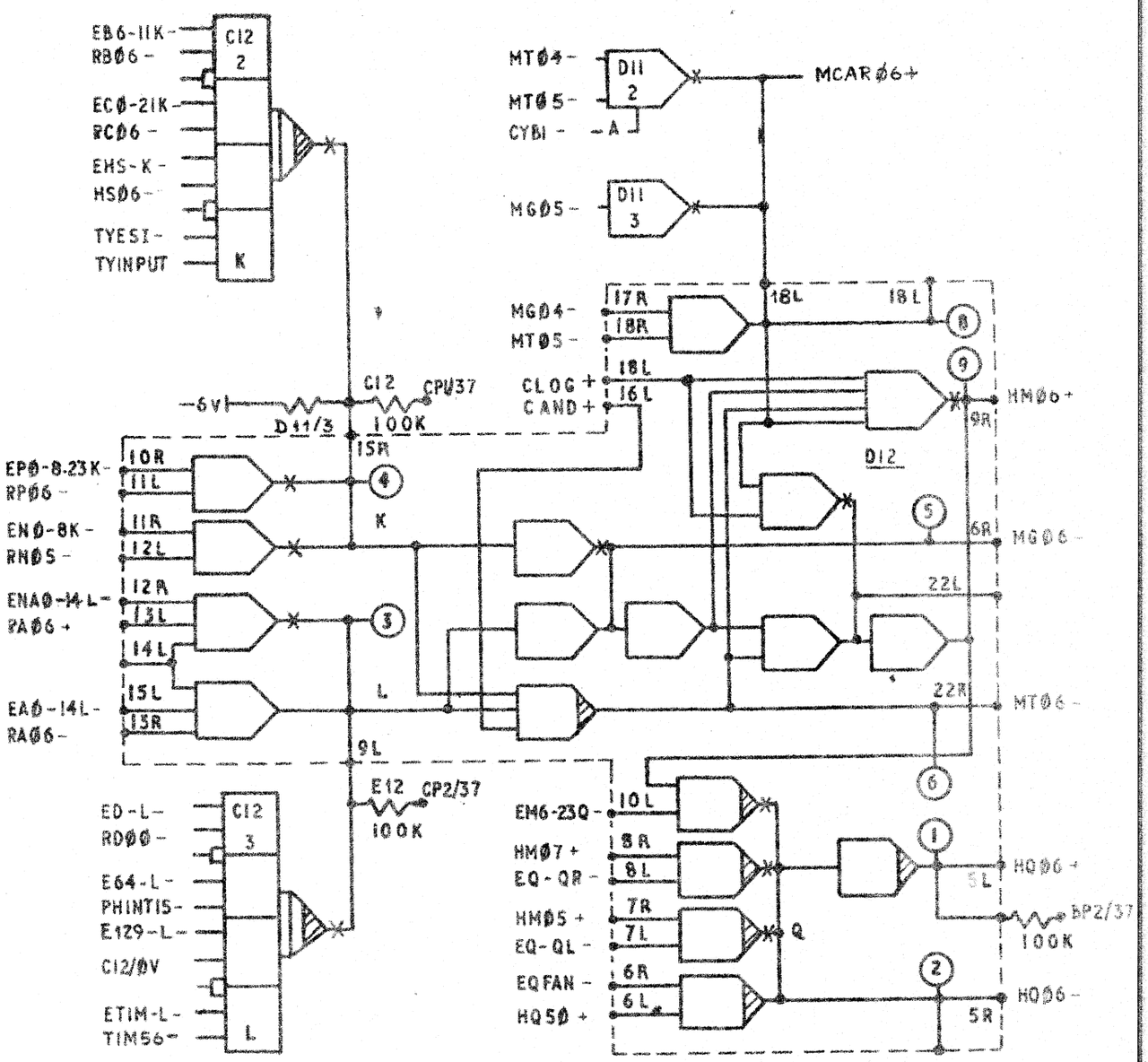
EB6-11K-
RBØ6-
ECØ-21K-
RCØ6-
EHS-K-
HSØ6-
TYESI-
TYINPUT
C12
2
K
MTØ4-
MTØ5-
CYBI-
D11
2
A
MCARØ6+
MGØ5-
D11
3
MGØ4-
MTØ5-
17R
18R
18L
18L
CLOG+
CAND+
18L
16L
-6V
D11/3
C12
100K
CPØ37
15R
HMØ6+
9R
D12
EPØ-8.23K-
RPØ6-
10R
11L
K
ENØ-8K-
RNØ5-
11R
12L
6R
MGØ6-
ENAØ-14L-
RAØ6+
12R
13L
14L
22L
EAØ-14L-
RAØ6-
15L
13R
L
22R
MTØ6-
9L
E12
CP2/37
100K
ED-L-
RDØØ-
C12
3
E64-L-
PHINTIS-
E129-L-
C12/ØV
ETIM-L-
TIM56-
L
EM6-23Q-
10L
HMØ7+
EQ-QR-
8R
8L
HMØ5+
EQ-QL-
7R
7L
Q
EQFAN-
HQ5Ø+
6R
6L
HQØ6+
5L
BP2/37
100K
HQØ6-
5R

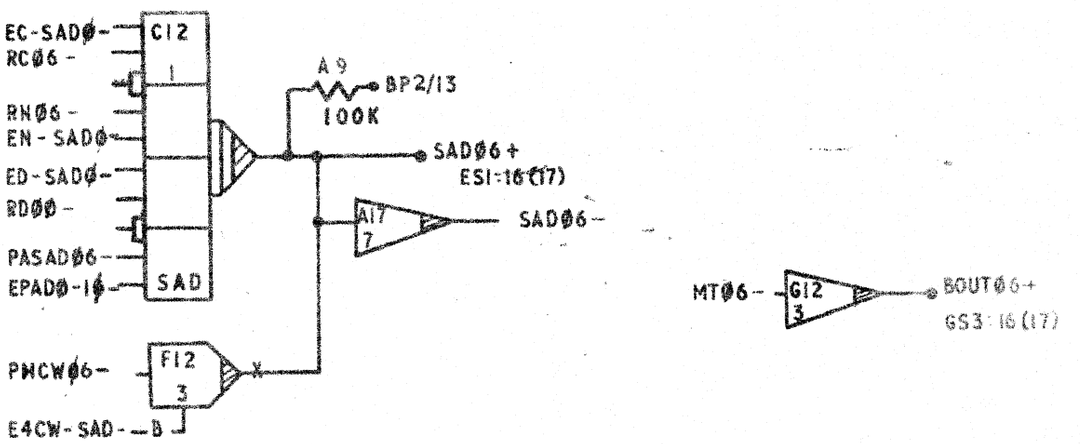
EC-SADØ-
RCØ6-
C12
1
RNØ6-
EN-SADØ-
ED-SADØ-
RDØØ-
PASADØ6-
EPADØ-1Ø-
SAD
A9
BP2/13
100K
SADØ6+
ESI-16(17)
A17
7
SADØ6-
PWCWØ6-
F12
3
E4CW-SAD-
B
MTØ6-
G12
3
BOUTØ6+
GS3-16(17)

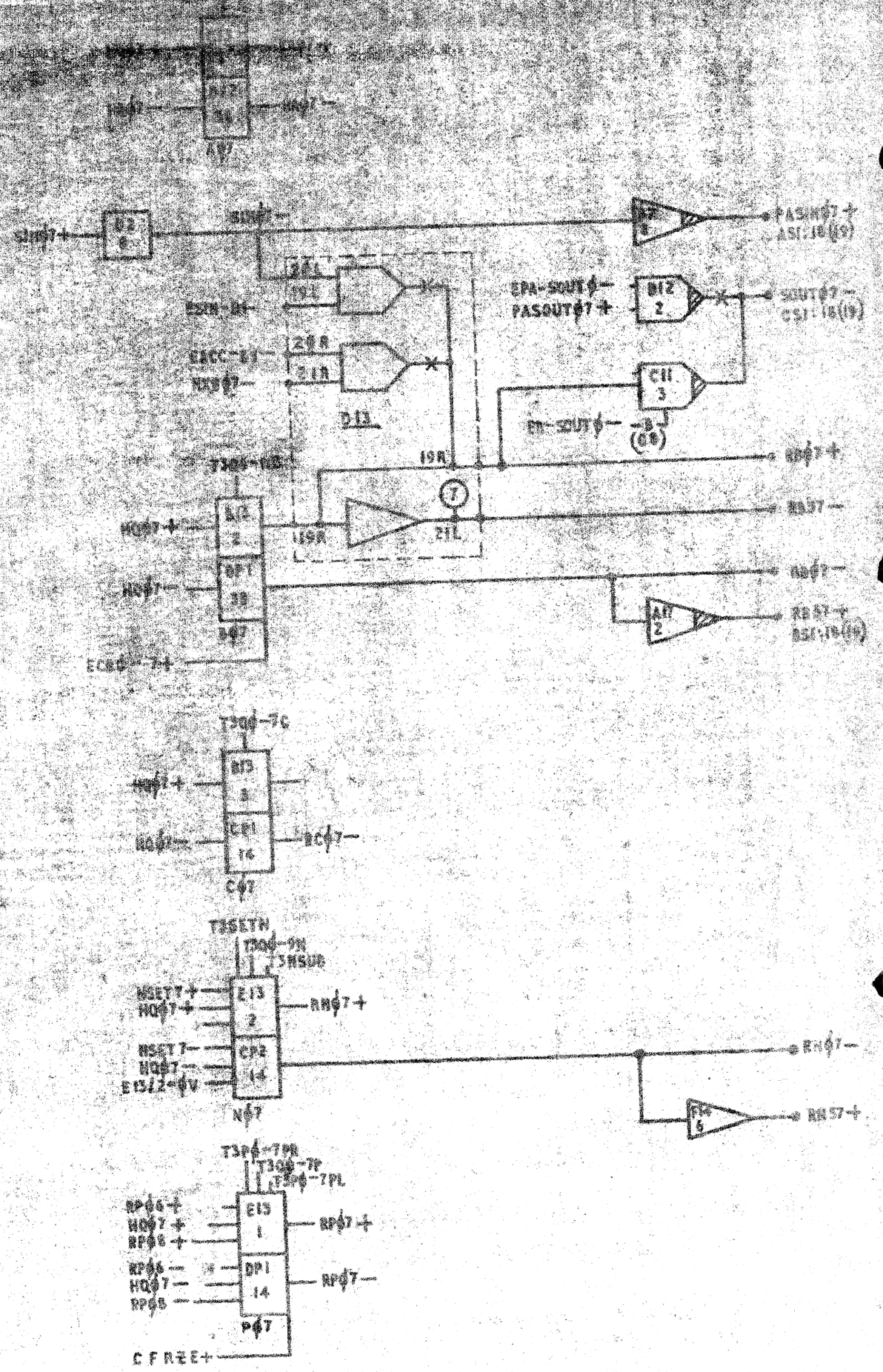

STATS. SLICE 7.

W.G.C. 02/07

SUB	1SS	1												
A.C.W.	0827	1565												
DATE	25/8/67	30/9/68												

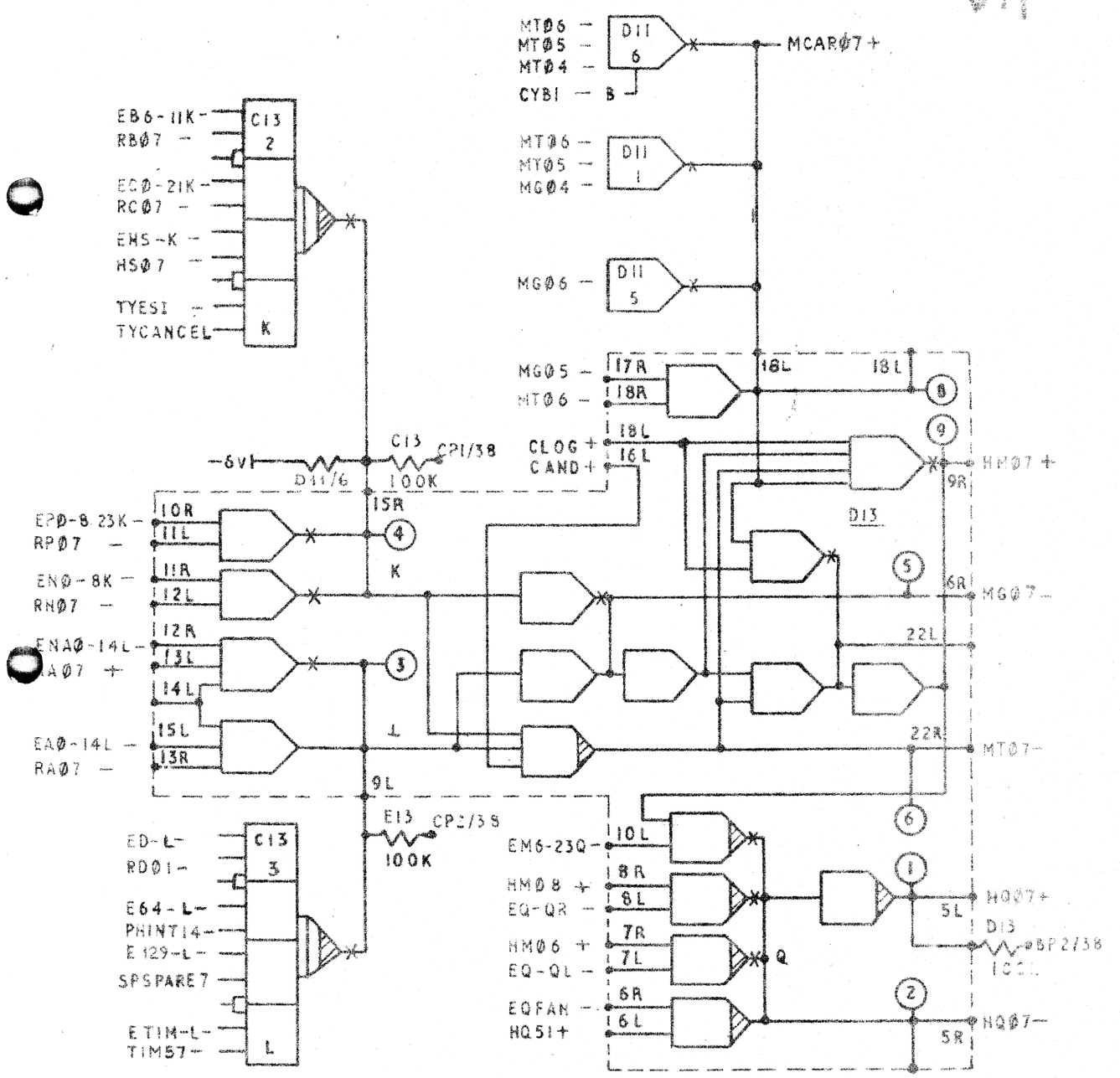

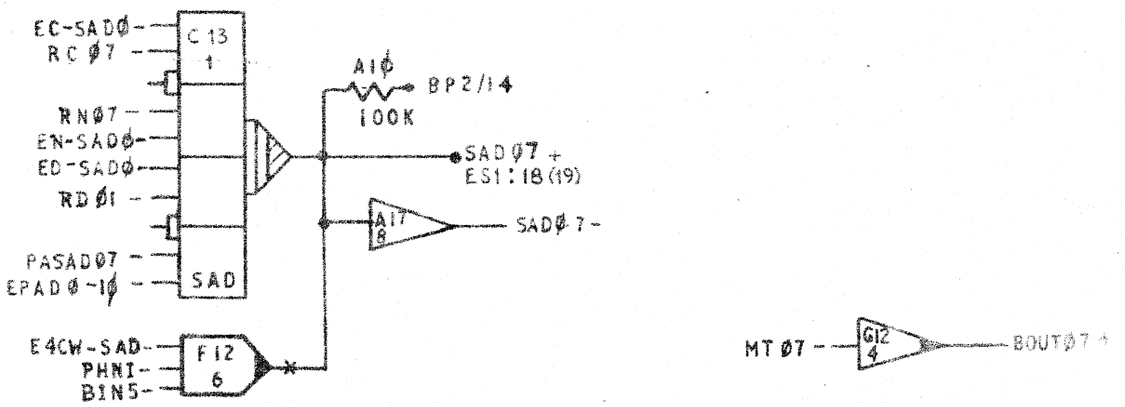

GATES SLICE 7.

W.G.C.Ø2/07.

SUB.	ISS	1	2												
A.C.W.	0827	1527	1581												
DATE	25/8/67	28/6/68	15/11/68												

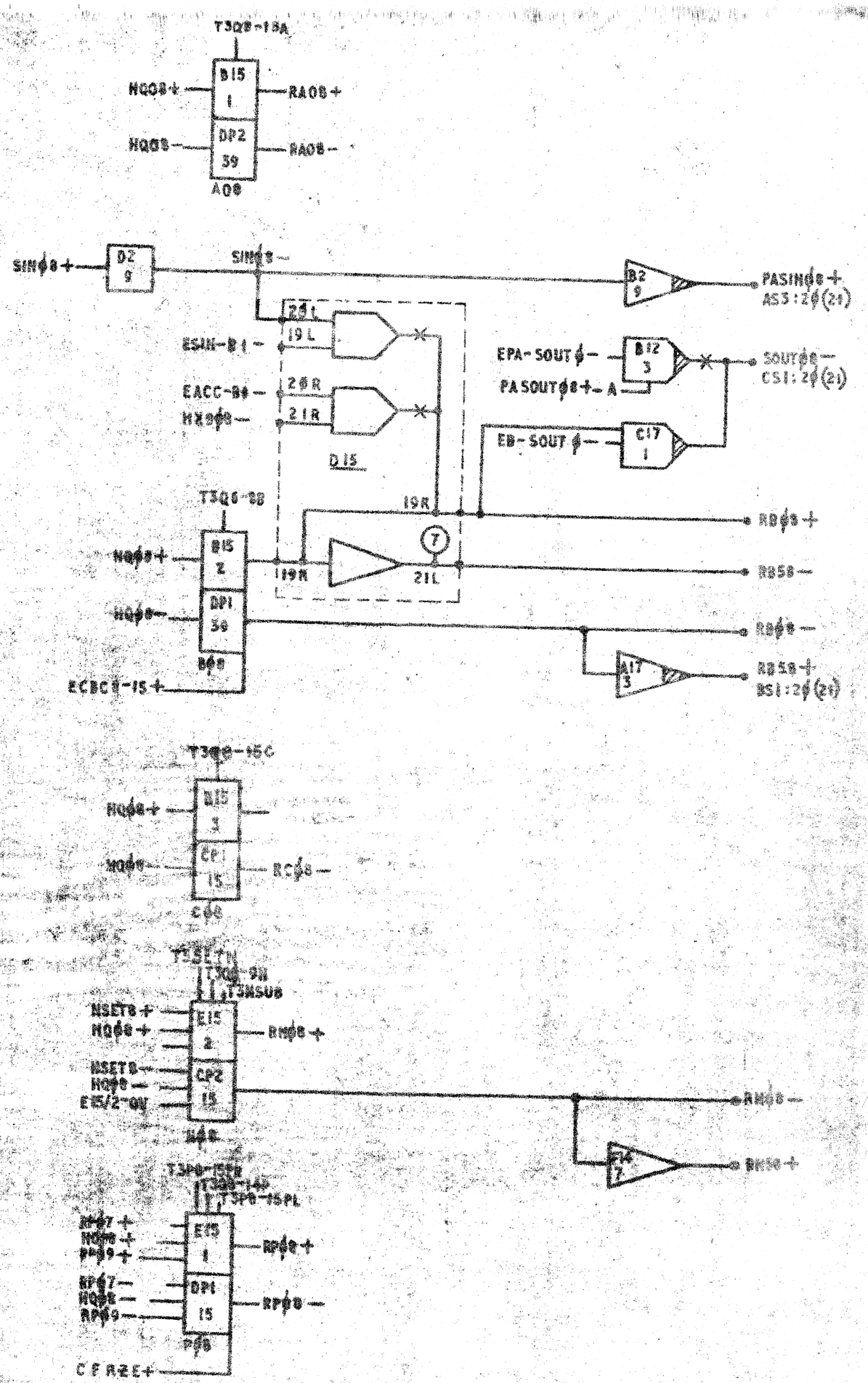
T3Q8-15A
NQ08+
RA08+
NQ08-
RA08-
B15
1
DP2
39
A08
SIN08+
D2
9
SIN08-
B2
9
PASIN08+
AS3:20(21)
21L
19L
ESIN-B1-
EACC-B4-
MX08-
20R
21R
D15
EPA-SOUT0-
PASOUT08+-A
B12
3
SOUT08-
CS1:20(21)
EB-SOUT0-
C17
1
T3Q6-8B
19R
RD08+
NQ08+
B15
2
19R
21L
RB58-
NQ08-
DP1
39
B08
RD08-
ECBC8-15+
A17
3
RB58+
BS1:20(21)
T3Q8-15C
NQ08+
B15
3
NQ08-
CP1
15
RC08-
C08
T3SET+N
T3Q8-9N
T3NSUB
NSET8+
NQ08+
E15
2
RM08+
NSET8-
NQ08-
E15/2-0V
CP2
15
M08
RM08-
F14
7
RM10+
T3P8-15B
T3P8-14P
T3P8-15PL
RP07+
NQ08+
RP09+
E15
1
RP08+
RP07-
NQ08-
RP09-
DP1
15
RP08-
P08
CFRZE+

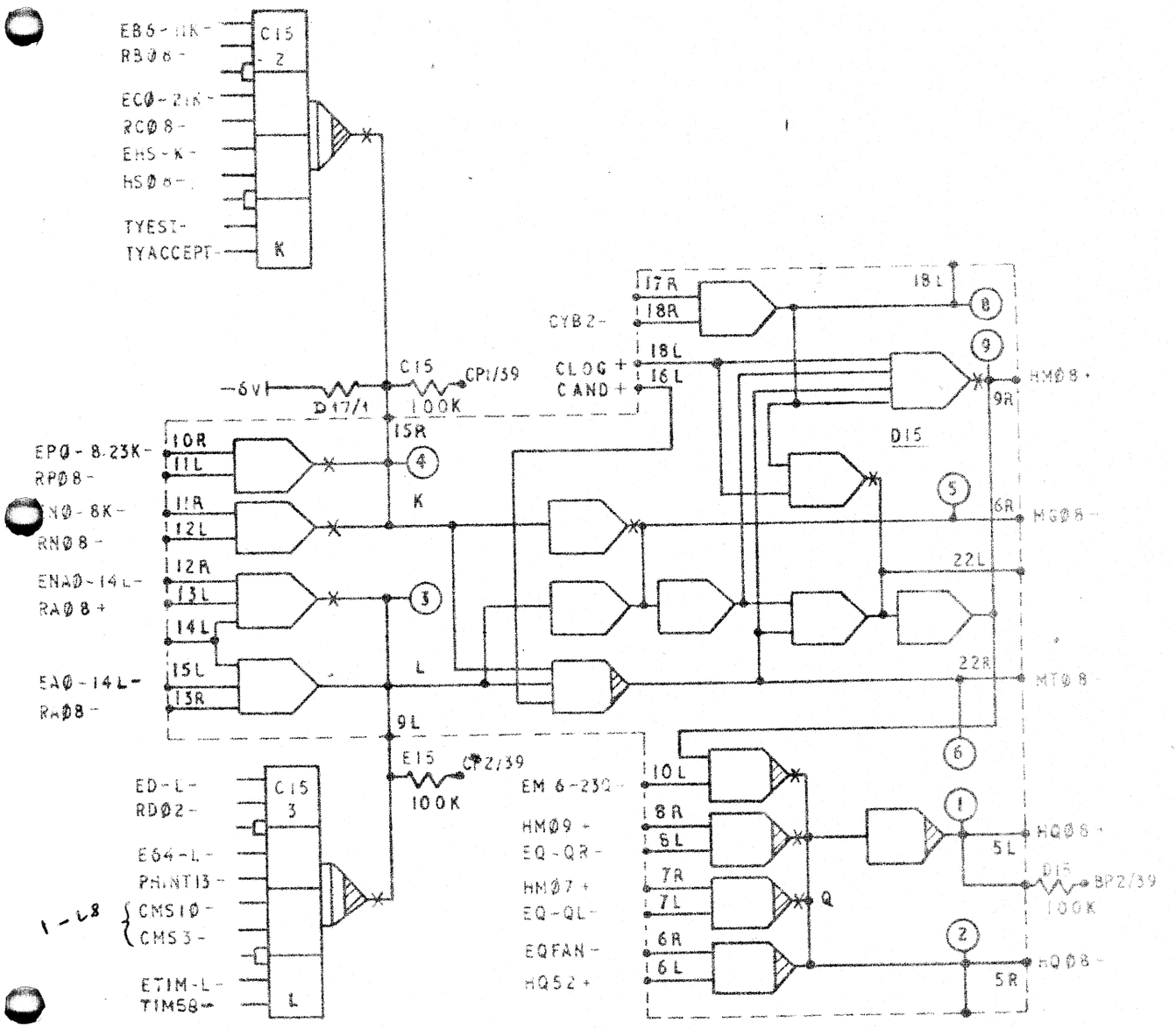

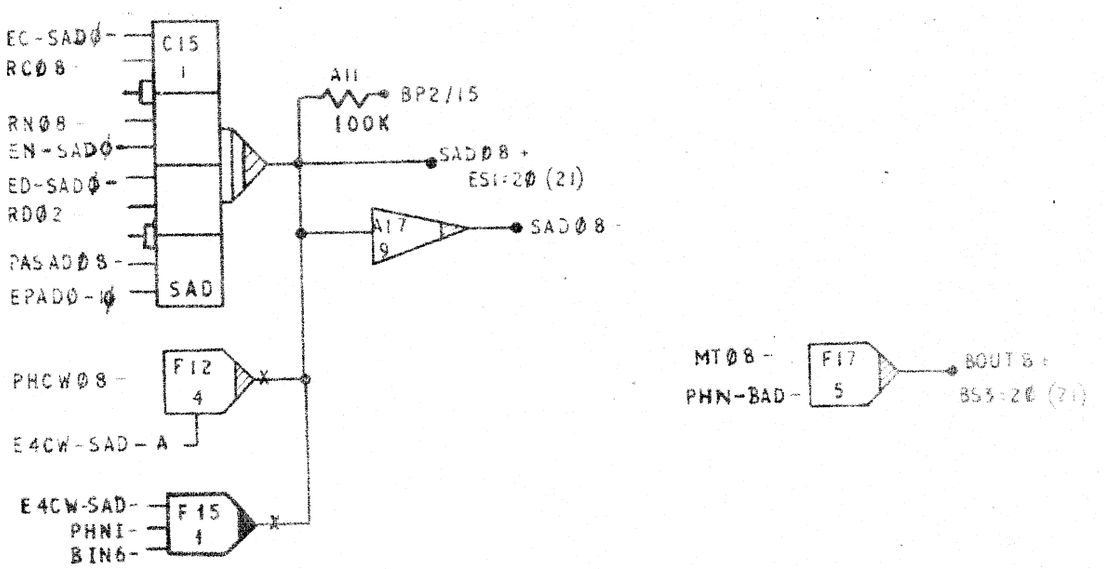

GATE SLICE 0

W.G.C.Ø2/08

SUB.	ISS	1	2
A.C.W.	0827	1527	1581

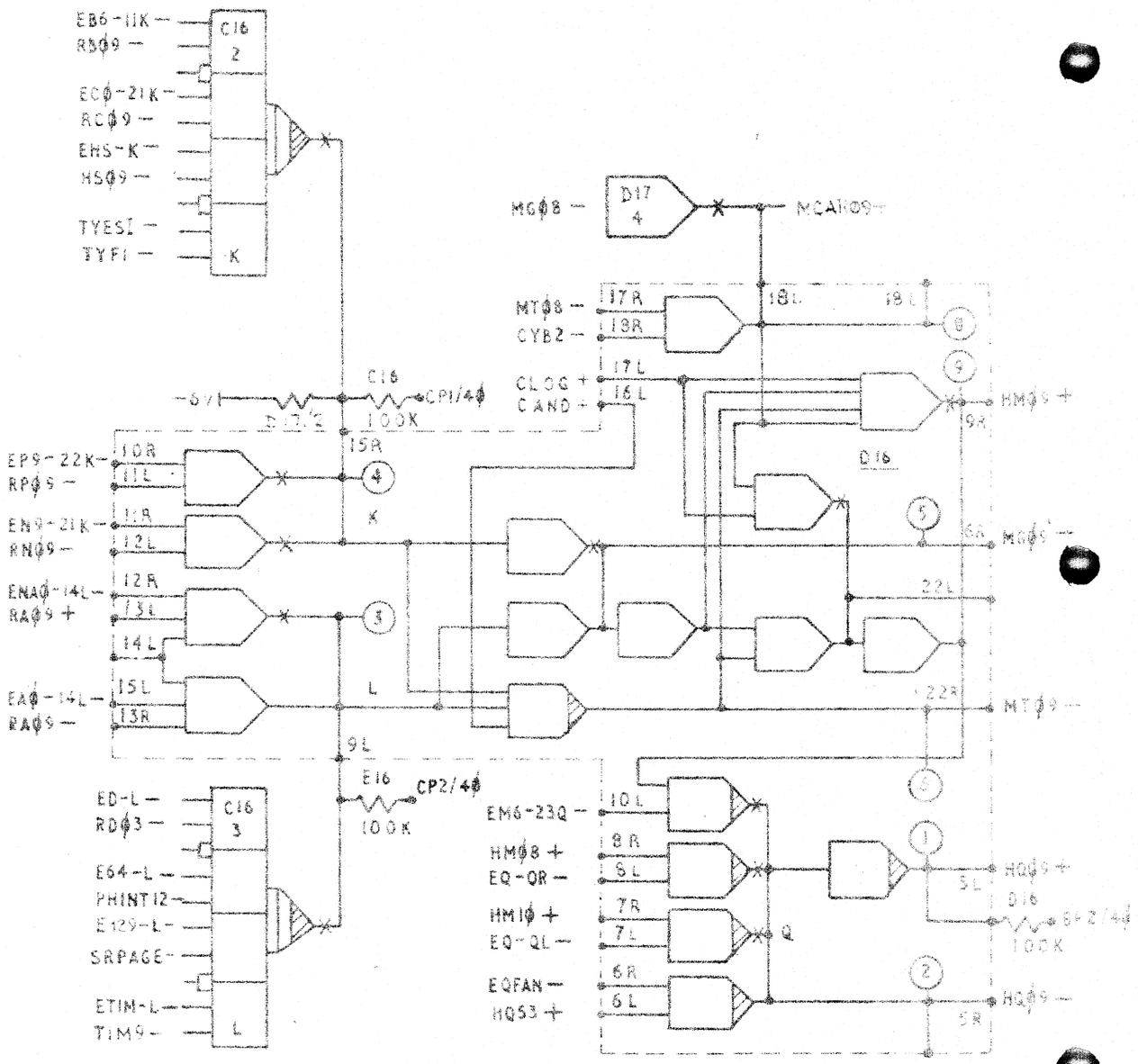

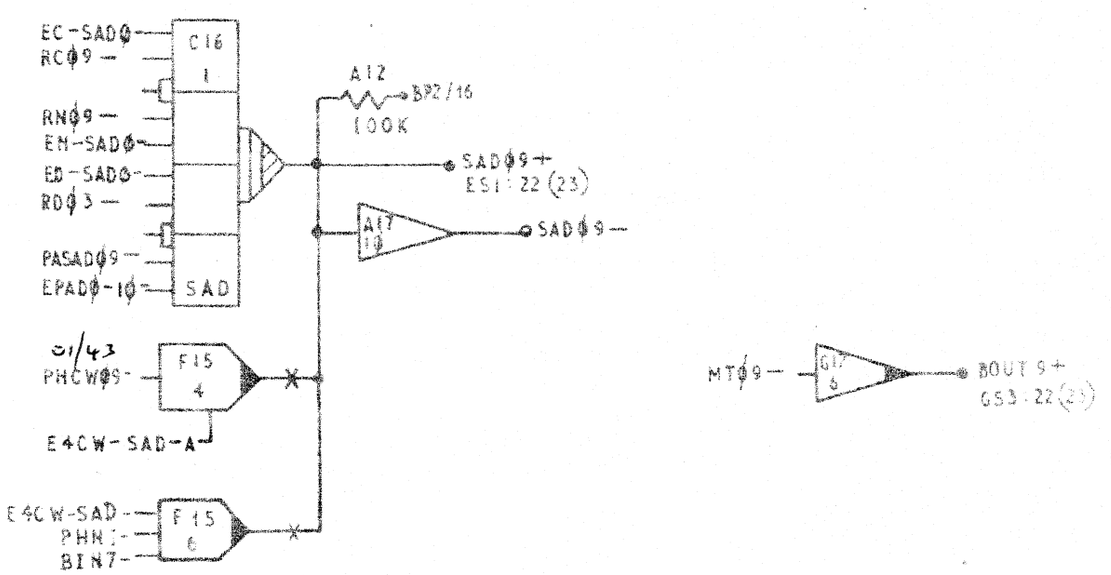

GATES SLICE 9.

W 6 C Ø 2 / Ø 9.

SUB.	1SS	1	2										
A.C.W	0827	1527	1581										
DATE	05/4	[illegible]	[illegible]										

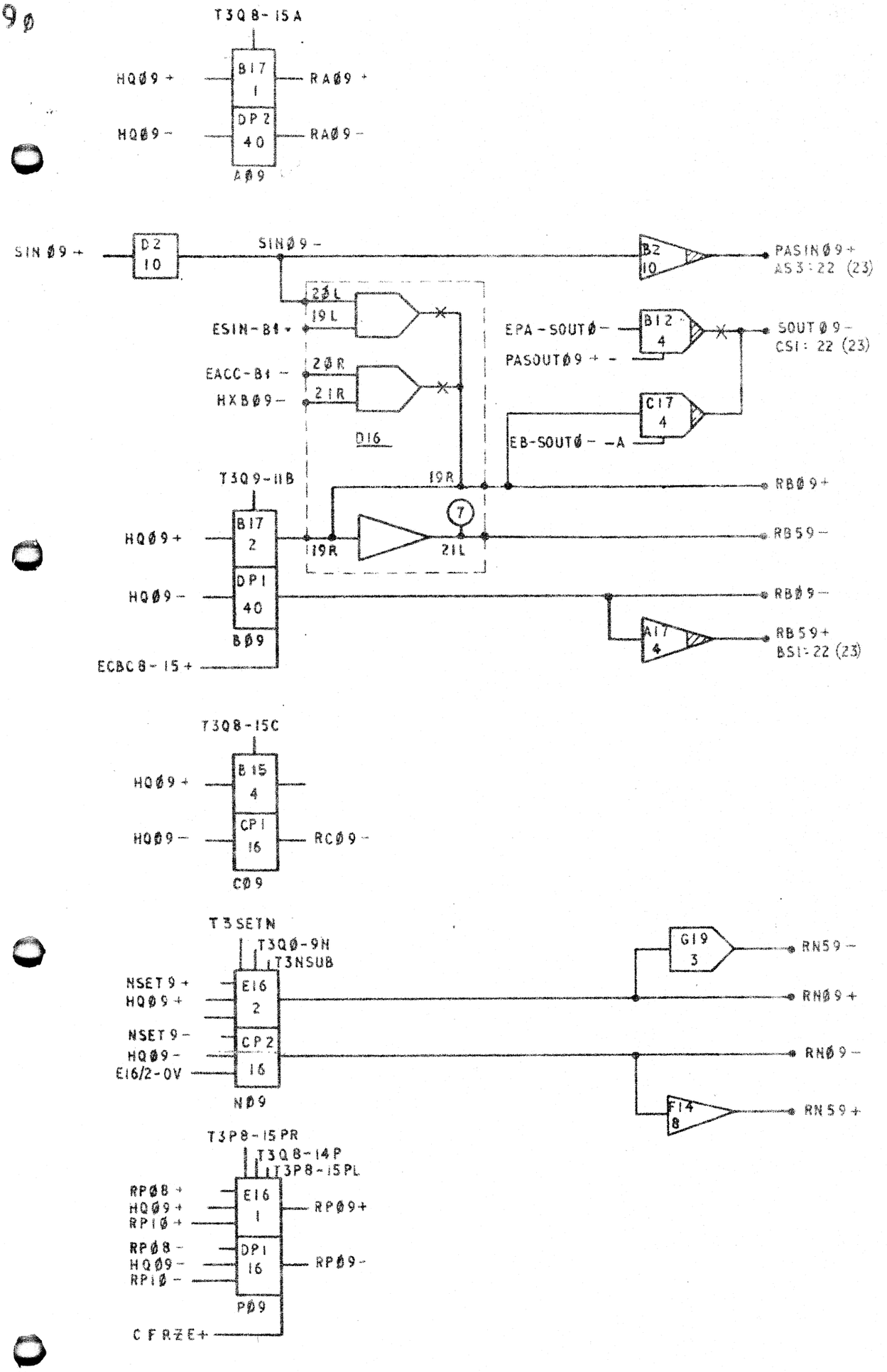
T3Q8-15A
HQØ9+
B17
1
RAØ9+
HQØ9-
DP2
40
RAØ9-
AØ9
SINØ9+
D2
10
SINØ9-
B2
10
PASINØ9+
AS3:22 (23)
23L
19L
ESIN-B1+
EPA-SOUTØ-
B12
4
SOUTØ9-
CS1: 22 (23)
PASOUTØ9+-
EACC-B1-
20R
21R
HXBØ9-
C17
4
D16
EB-SOUTØ--A
T3Q9-11B
19R
RBØ9+
7
HQØ9+
B17
2
19R
21L
RB59-
HQØ9-
DP1
40
RBØ9-
BØ9
A17
4
RB59+
BS1:22 (23)
ECBC8-15+
T3Q8-15C
HQØ9+
B15
4
HQØ9-
CP1
16
RCØ9-
CØ9
T3SETN
T3QØ-9N
T3NSUB
G19
3
RN59-
NSET9+
HQØ9+
E16
2
RNØ9+
NSET9-
HQØ9-
CP2
16
RNØ9-
E16/2-0V
NØ9
F14
8
RN59+
T3P8-15PR
T3Q8-14P
T3P8-15PL
RPØ8+
HQØ9+
RP1Ø+
E16
1
RPØ9+
RPØ8-
HQØ9-
RP1Ø-
DP1
16
RPØ9-
PØ9
CFRZE+

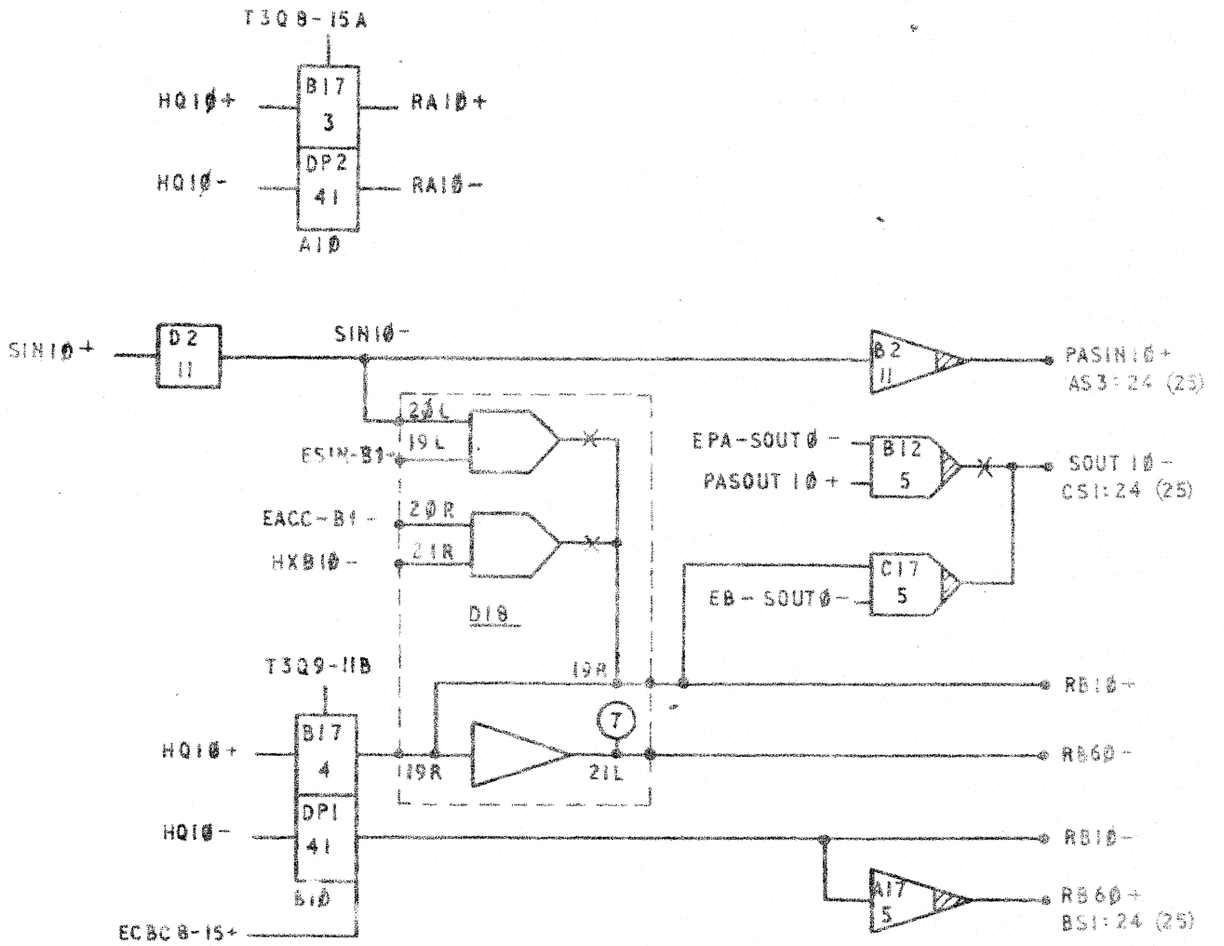

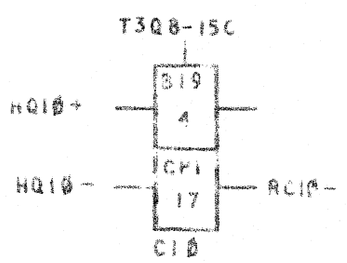

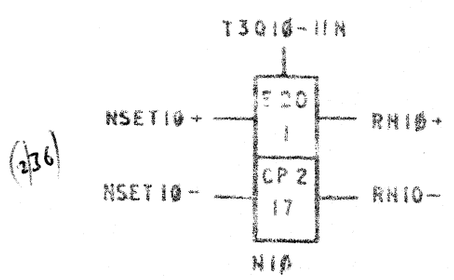

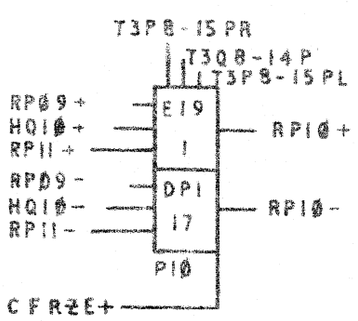

L.G.C. Ø2/1ØØ

STATS. SLICE 1Ø

SUB	1SS	1												
A.C.W.	0827	1565												

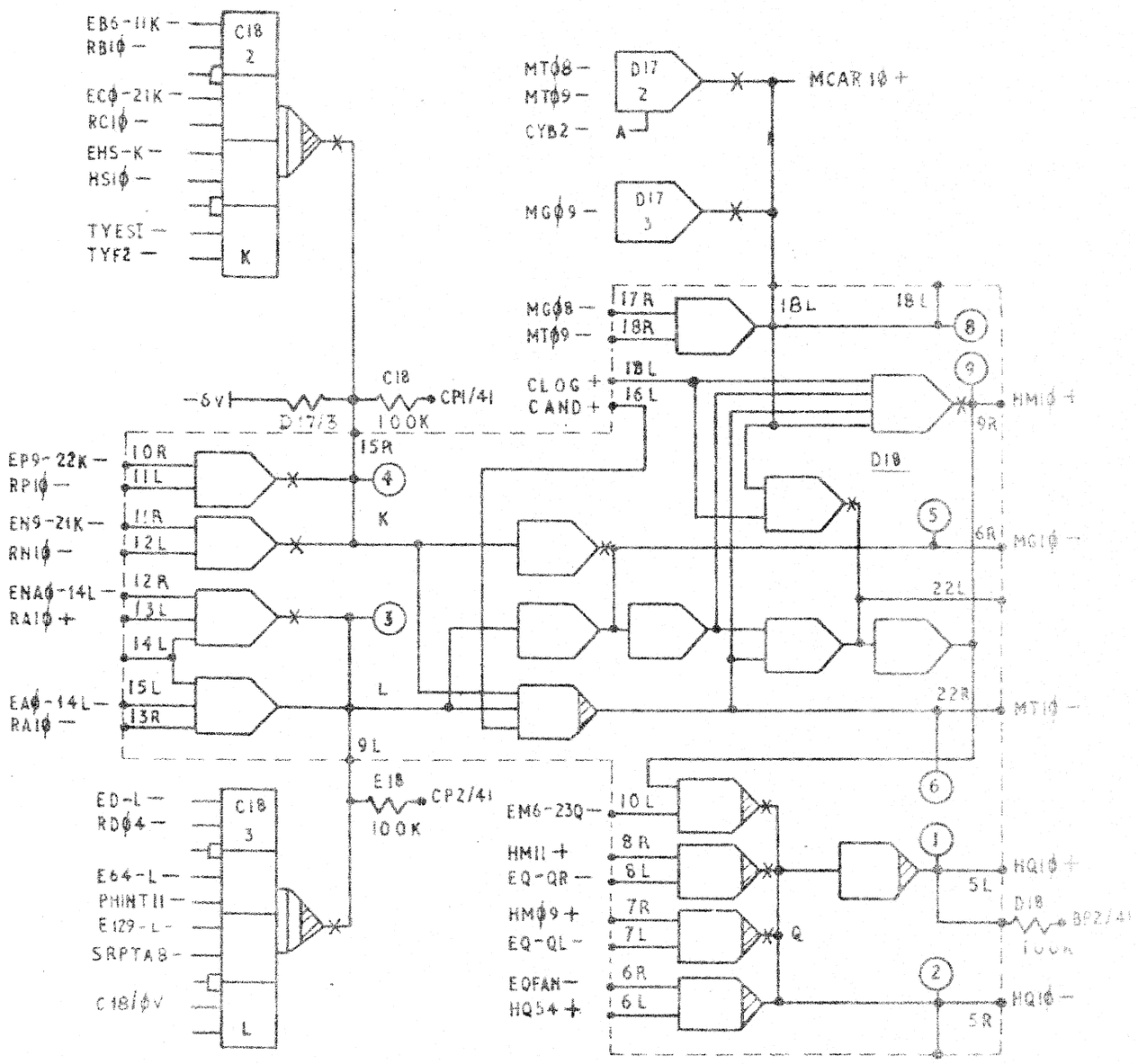

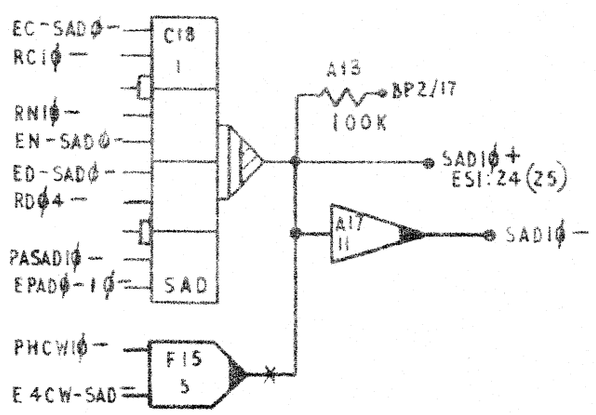

GATES SLICE 1ϕ

W.G.C.ϕ2/1

SUB.	1SS	1	2												
A.C.W.	0827	1527	1581												
DATE	25/8/67	28/6/68	15/11/68												

11Ø

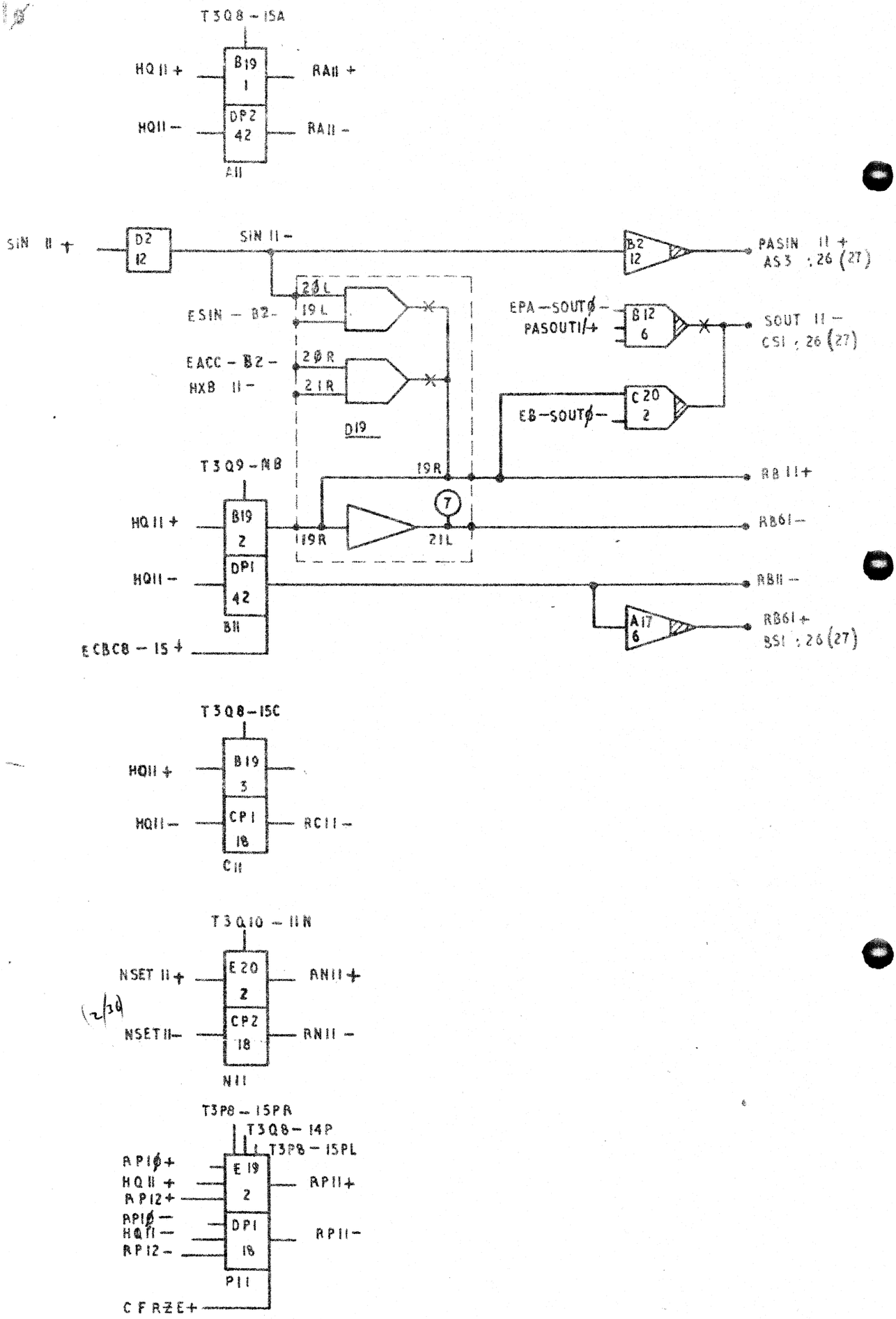

Ø2/11Ø

STATS SLICE 11

SUb	1SS	1													
A.C.W.	0827	1565													
DATE	25/8/67	30/9/68													

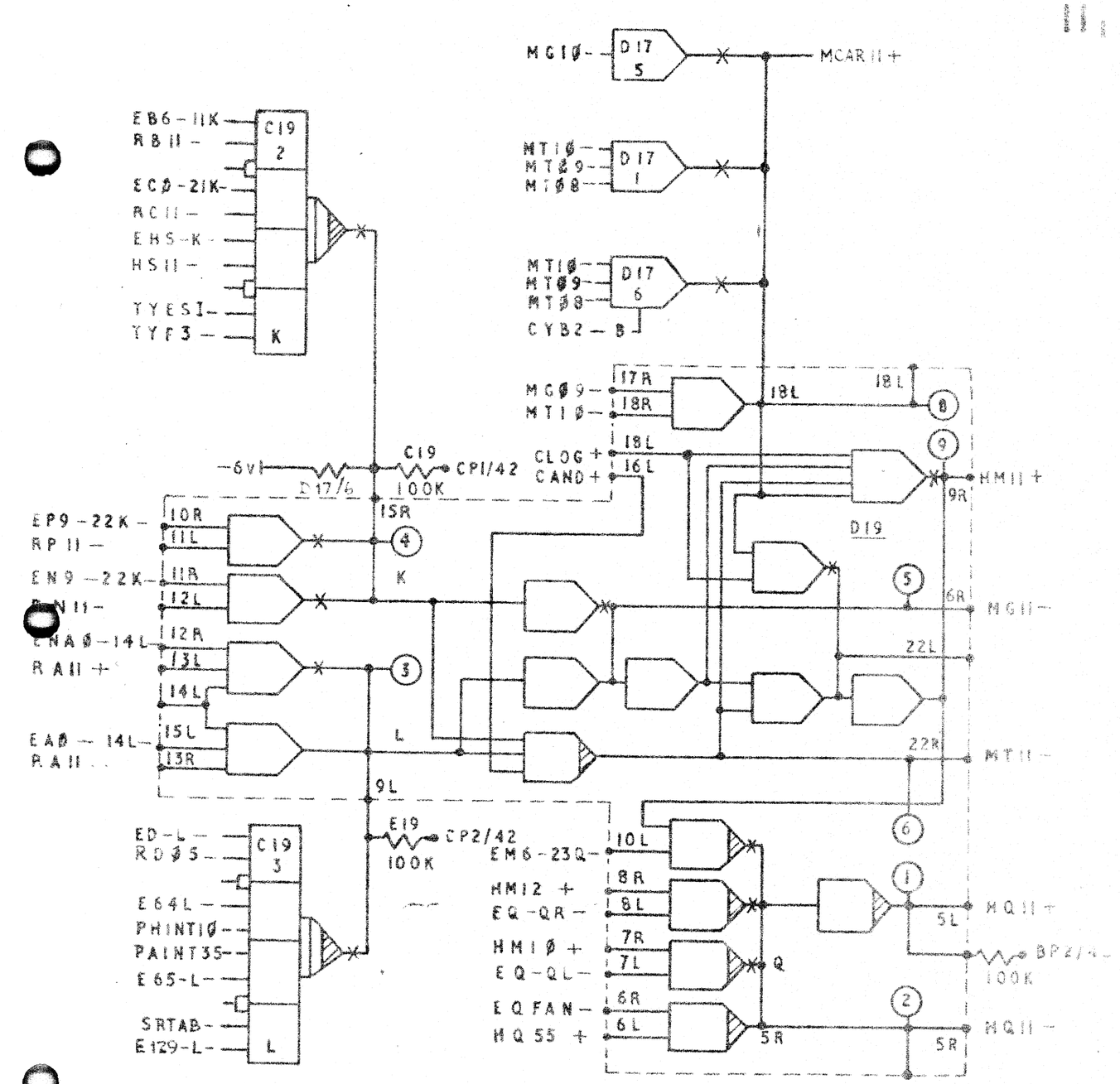

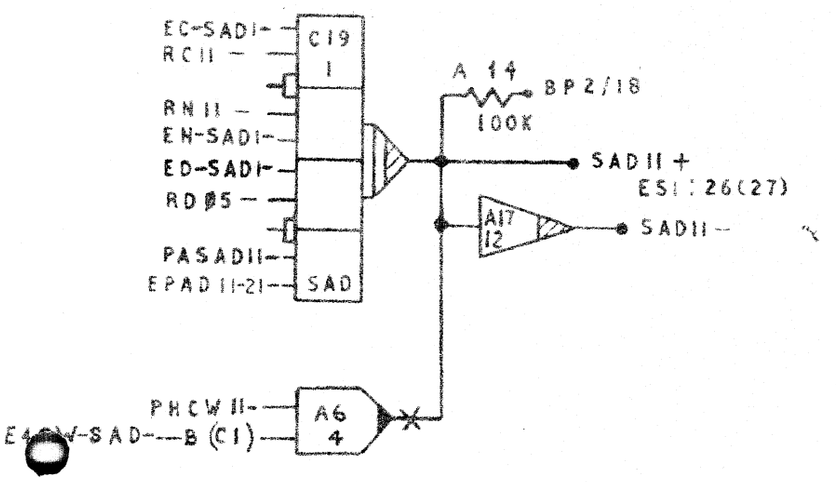

GATES SLICE 11

W.G.C Ø2/11

SUB.	ISS	1	2	3										
A.C.W.	0827	1525	1527	1581										
DATE	25/8/67	26/6/68	28/6/68	15/11/68										

T308-15A.

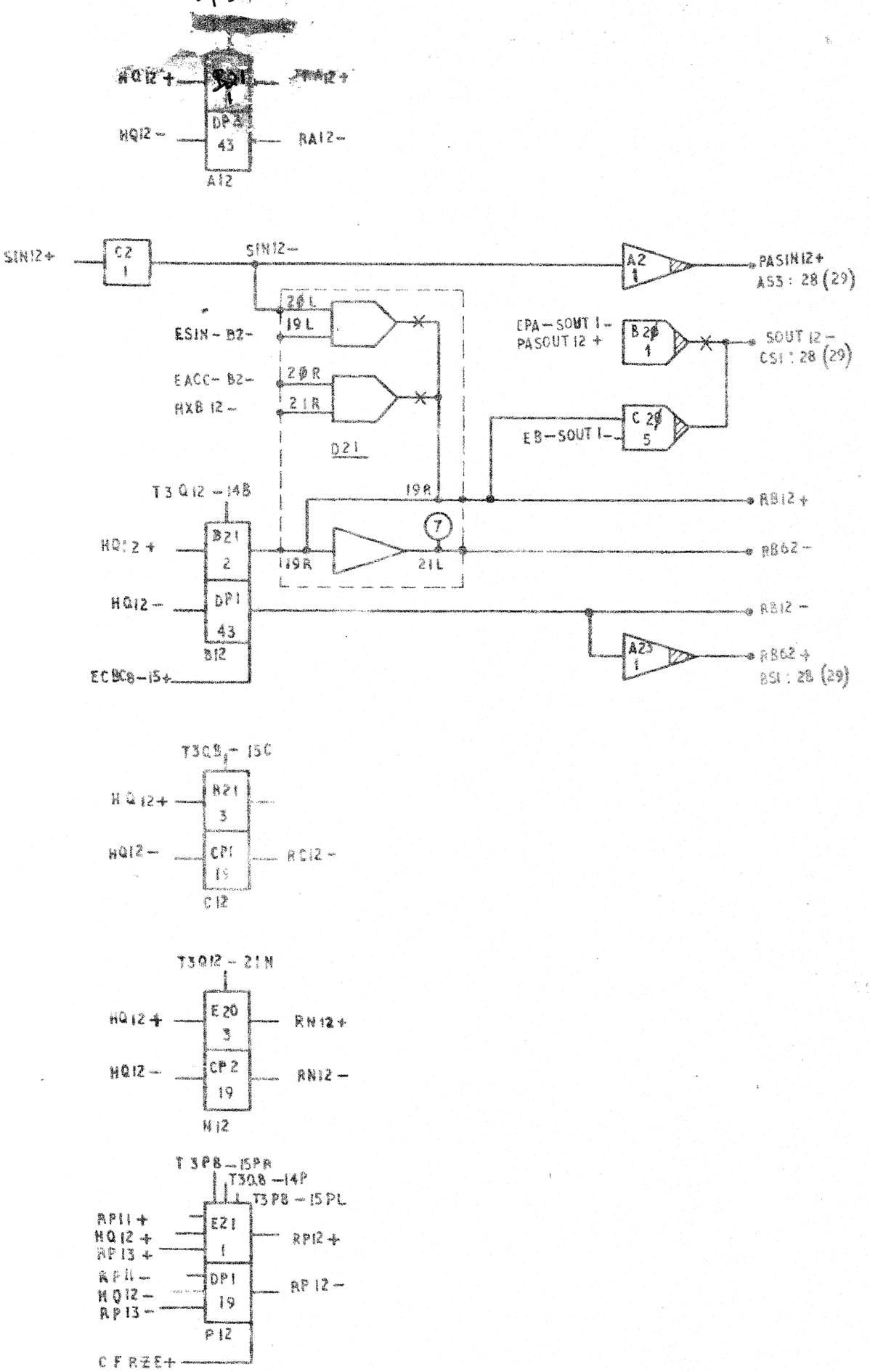

C. 02/120

STATS. SLICE 12

D	ISS	1													
W.	0827	1565													

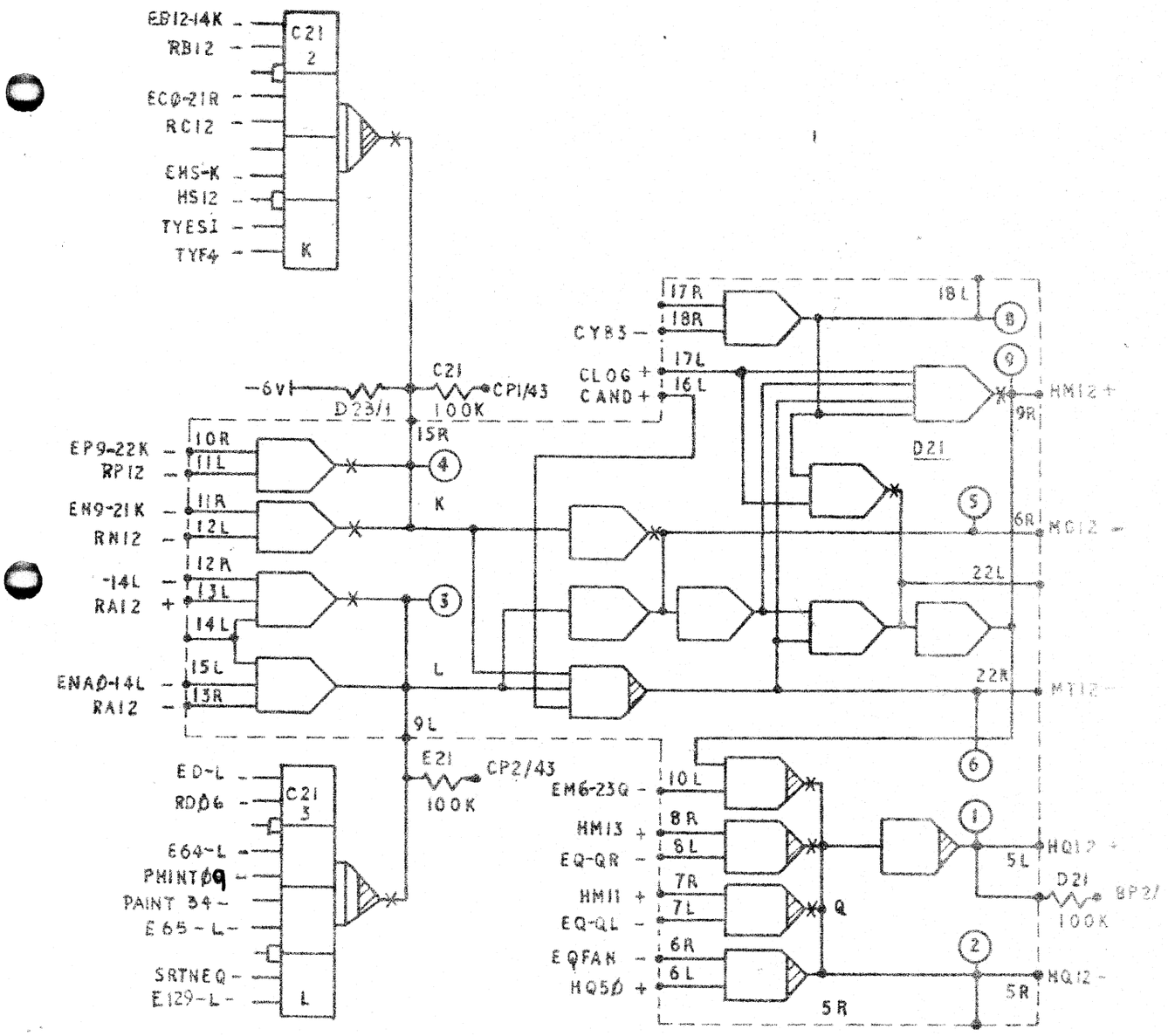

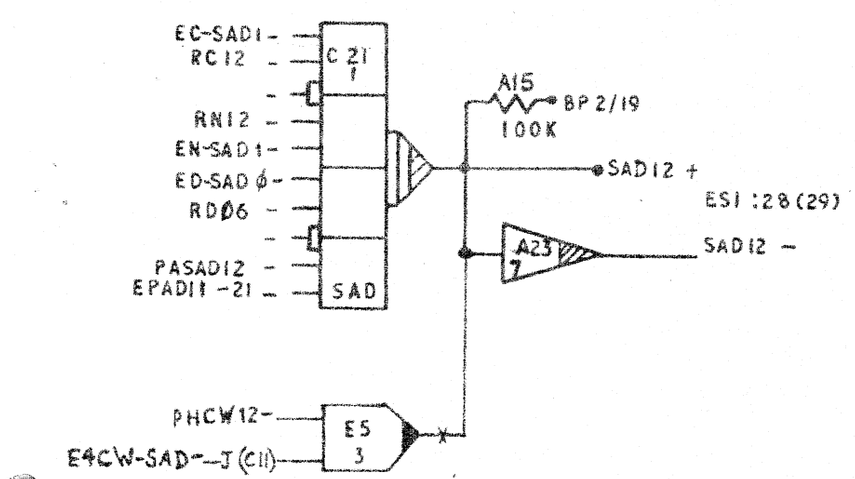

GATES SLICE 12

W.G.C.Ø2

SUB.	1SS	1	2	3	4									
A.C.W.	0827	1515	1525	1527	1581									
DATE	25/8/67	30/4/68	26/6/68	28/6/68	15/11/68									

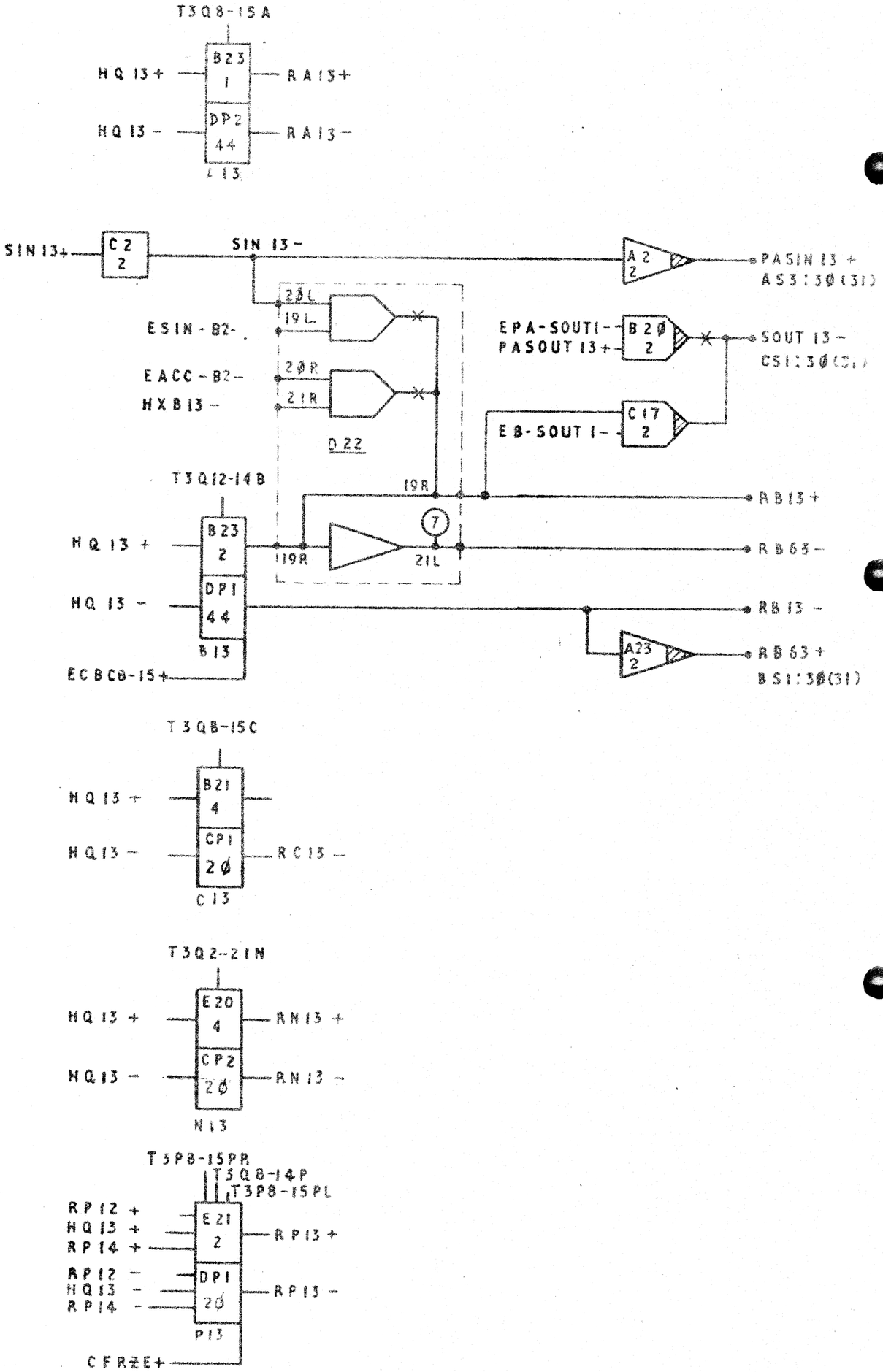

W.G.C. Ø2/13Ø

STATS. SLICE 13

SUB	1SS	1													
A.C.W.	0827	1565													
DATE	25/01	[illegible]													

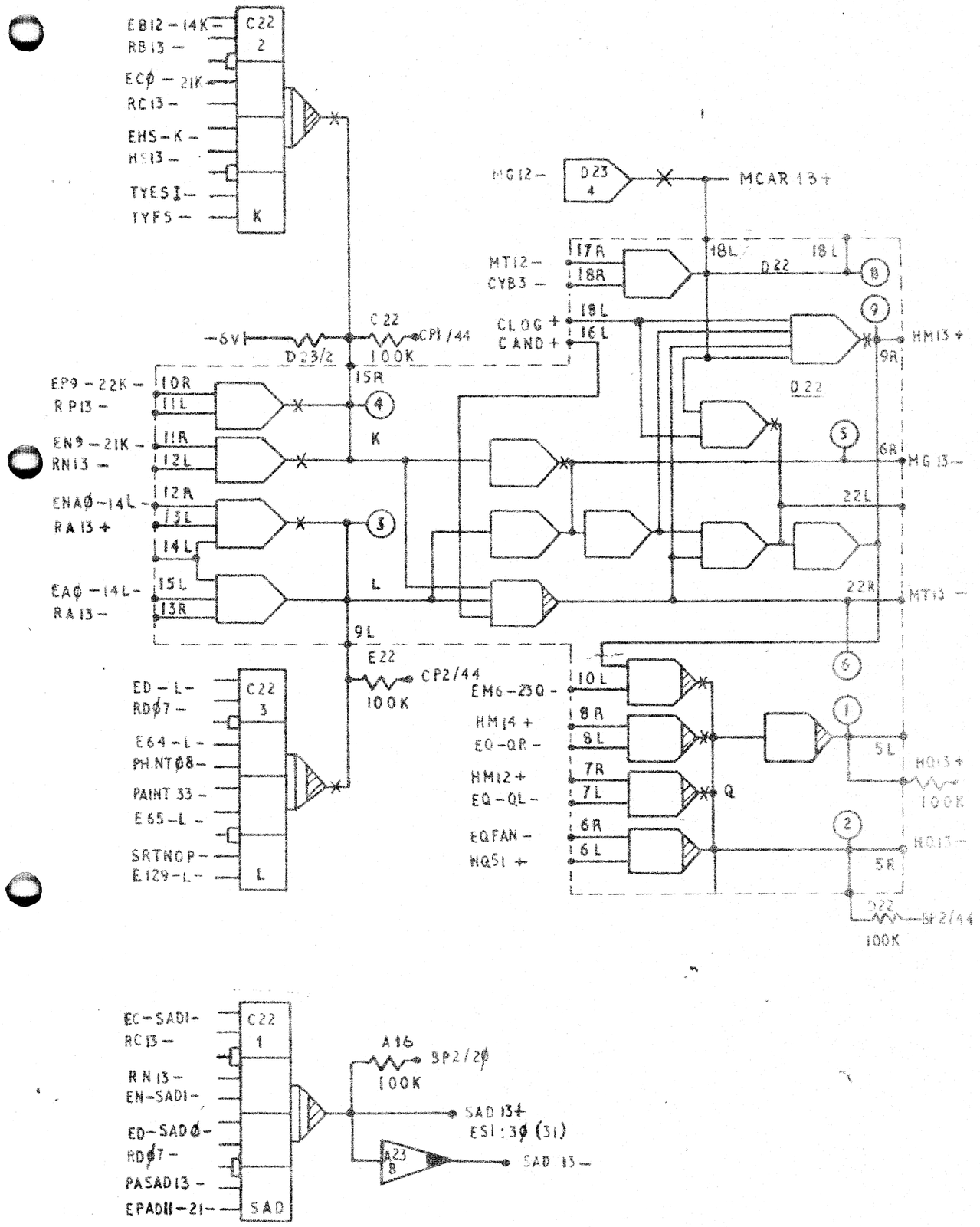

GATES SLICE

W.G.C Ø2/–

SUB.	ISS	1	2												
A.C.W.	0827	1527	1581												

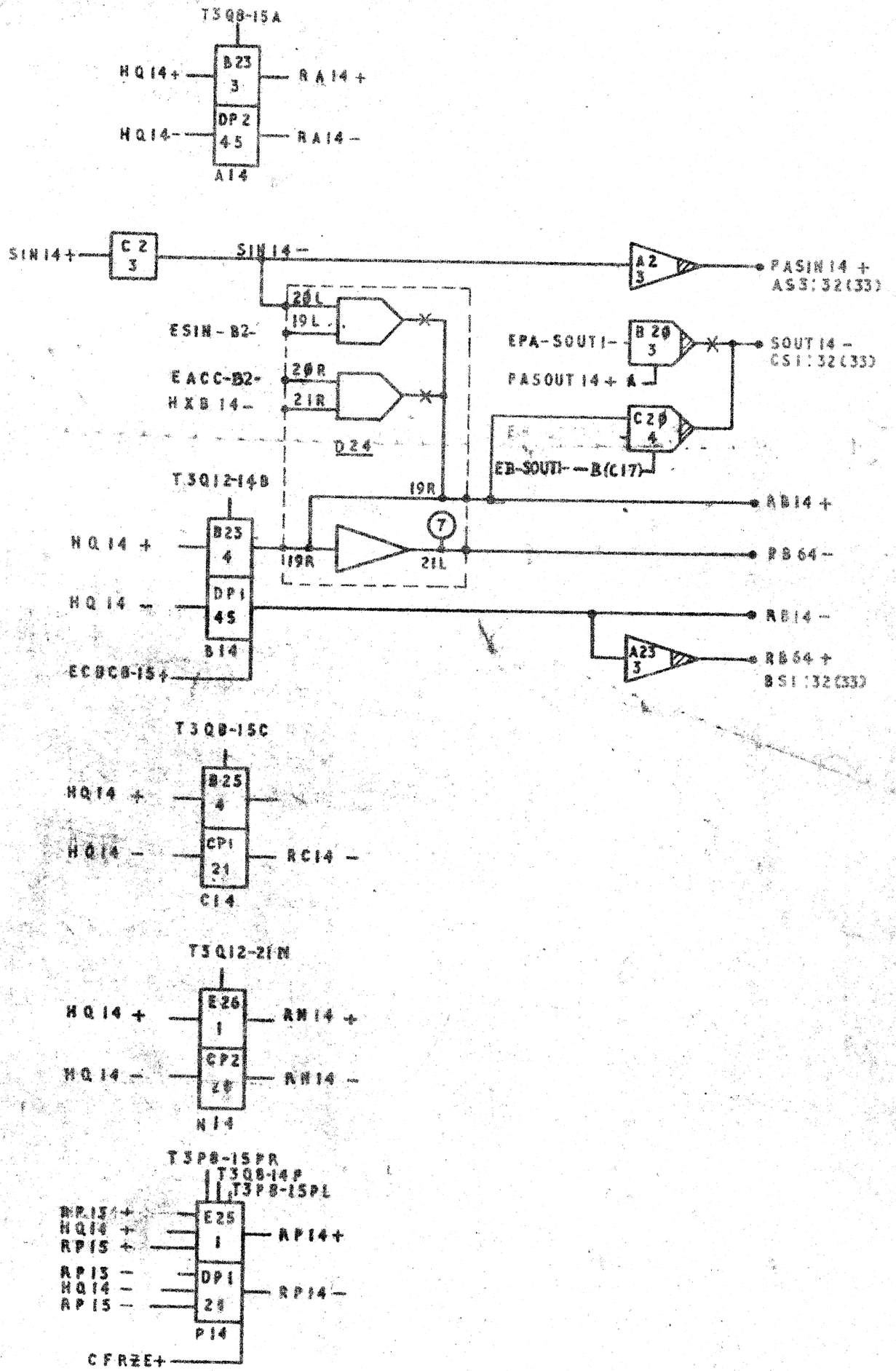
T3Q8-15A
HQ14+
B23
3
RA14+
HQ14-
DP2
45
RA14-
A14
SIN14+
C2
3
SIN14-
A2
3
PASIN14+
AS3:32(33)
20L
19L
ESIN-B2-
EPA-SOUT1-
B20
3
SOUT14-
CS1:32(33)
EACC-B2-
20R
21R
HXB14-
PASOUT14+
C20
4
D24
EB-SOUT1--B(C17)
T3Q12-14B
19R
RB14+
HQ14+
B23
4
7
19R
21L
RB64-
HQ14-
DP1
45
RB14-
B14
A23
3
RB64+
BS1:32(33)
ECBCB-15+
T3Q8-15C
HQ14+
B25
4
HQ14-
CP1
21
RC14-
C14
T3Q12-21N
HQ14+
E26
1
RN14+
HQ14-
CP2
20
RN14-
N14
T3P8-15PR
T3Q8-14P
T3P8-15PL
HR15+
HQ14+
RP15+
E25
1
RP14+
RP13-
HQ14-
RP15-
DP1
21
RP14-
P14
CFRZE+

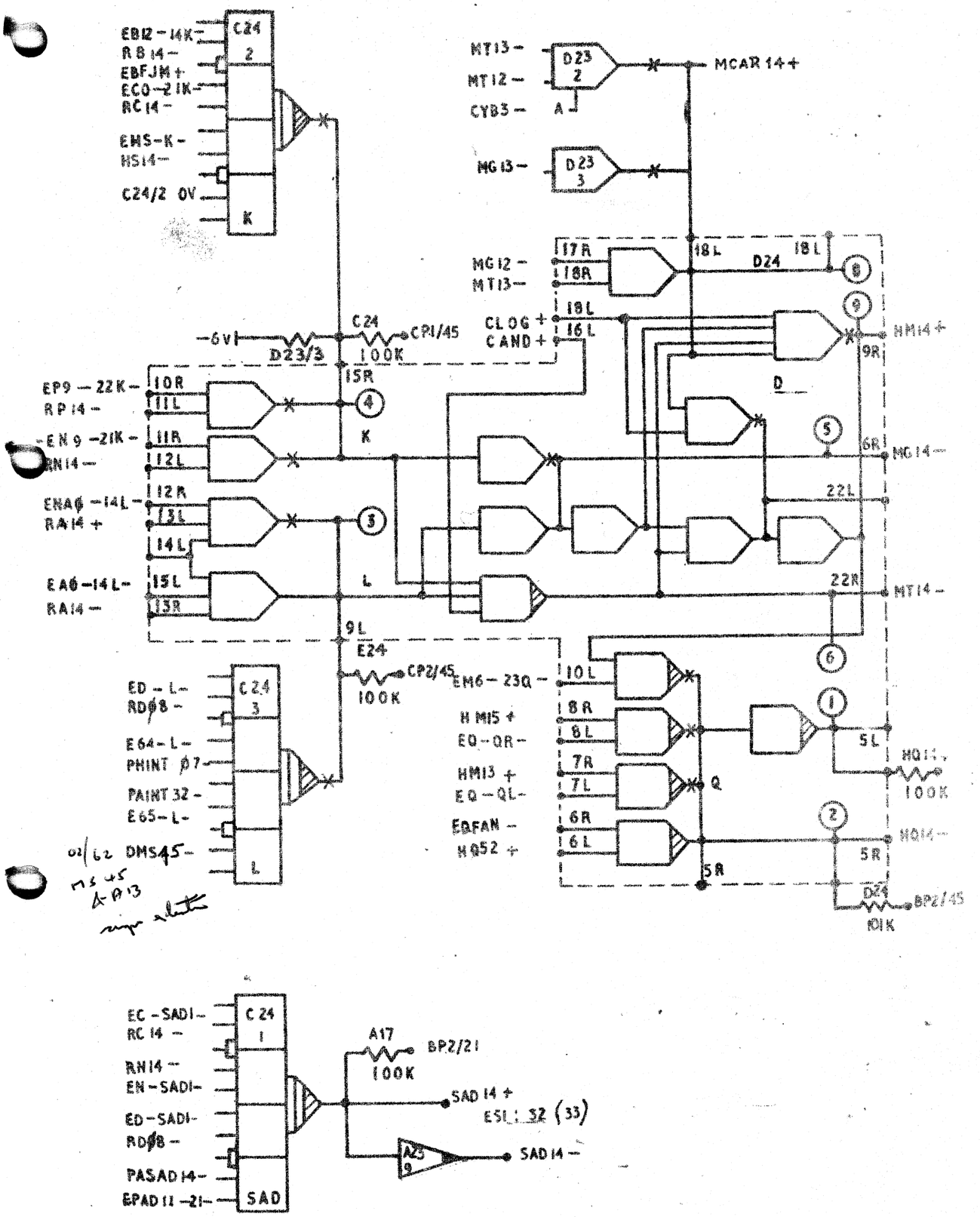

ES SLICE

W.G.C.

ISS 1

15 ø

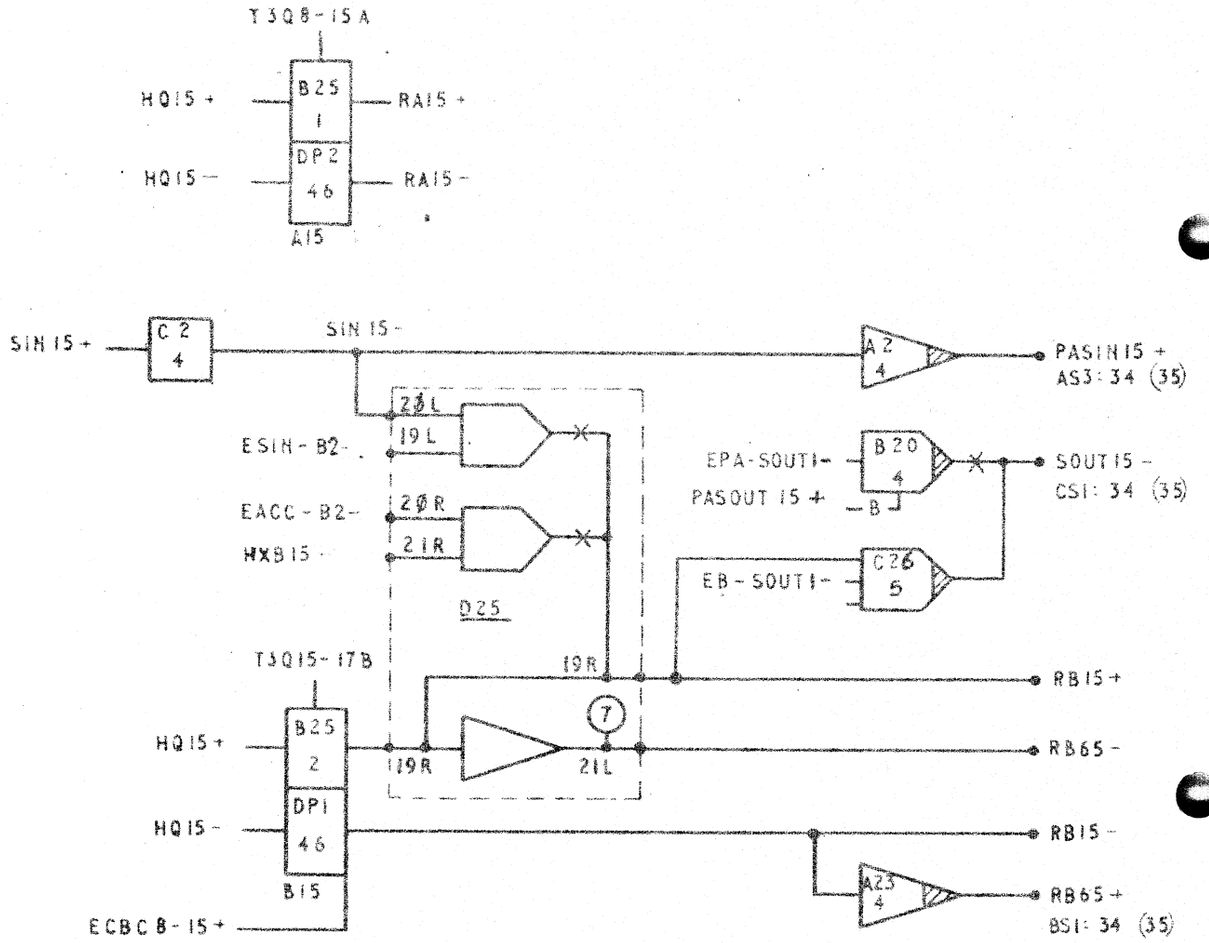

W.G.C. Ø2/15ø

STATS SLICE 15

SUB	ISS	1													
A.C.W.	0827	1565													
DATE	25/4/	30/4/													

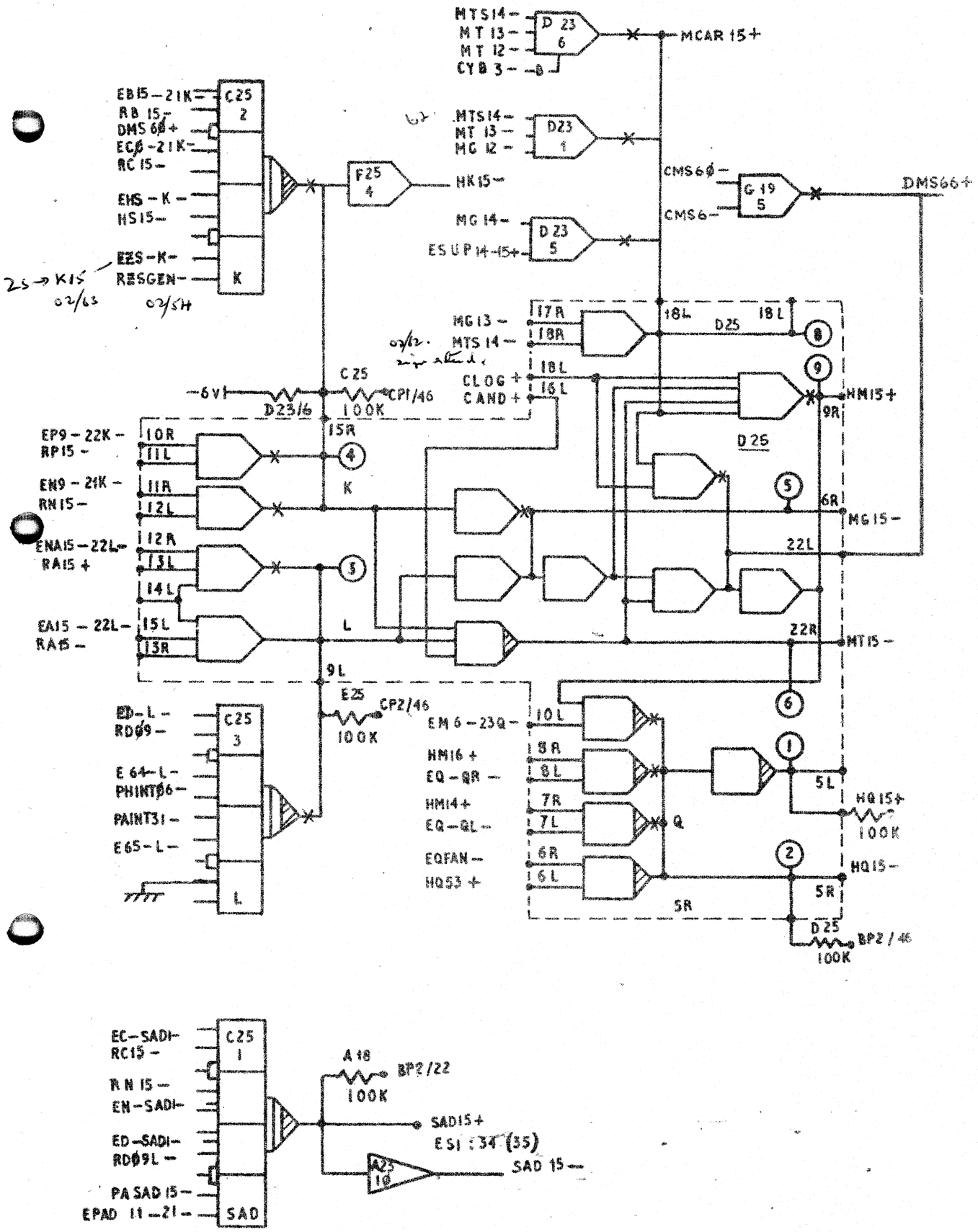
MTS14 –
MT 13 –
MT 12 –
CYB 3 –
D 23
6
MCAR 15+
EB15 – 21K –
RB 15 –
DMS 6Ø +
ECØ – 21K –
RC 15 –
EHS – K –
HS15 –
EZS – K –
RESGEN –
C25
2
K
F25
4
HK15 –
MTS14 –
MT 13 –
MG 12 –
D23
1
CMSGØ –
CMS6 –
G 19
5
DMS66+
MG 14 –
ESUP 14-15+
D 23
5
MG13 –
MTS 14 –
17R
18R
18L
D25
18L
CLOG +
CAND +
18L
16L
C25
CP1/46
100K
–6V
D23/6
15R
HM15+
9R
D 25
EP9 – 22K –
RP15 –
10R
11L
EN9 – 21K –
RN15 –
11R
12L
ENA15 – 22L –
RA15 +
12R
13L
14L
EA15 – 22L –
RA15 –
15L
13R
K
L
6R
MG15 –
22L
22R
MT15 –
9L
E25
CP2/46
100K
ED – L –
RDØ9 –
E 64 – L –
PHINTØ6 –
PAINT31 –
E65 – L –
C25
3
L
EM 6 – 23Q –
HM16 +
EQ – QR –
HM14 +
EQ – QL –
EQFAN –
HQ53 +
10L
8R
8L
7R
7L
6R
6L
Q
5L
HQ15+
100K
HQ15 –
5R
5R
D25
100K
BP2/46

EC – SADI –
RC15 –
RN 15 –
EN – SADI –
ED – SADI –
RDØ9L –
PA SAD 15 –
EPAD 11 – 21 –
C25
1
SAD
A18
100K
BP2/22
SAD15+
ES1 : 34 (35)
A25
1Ø
SAD 15 –

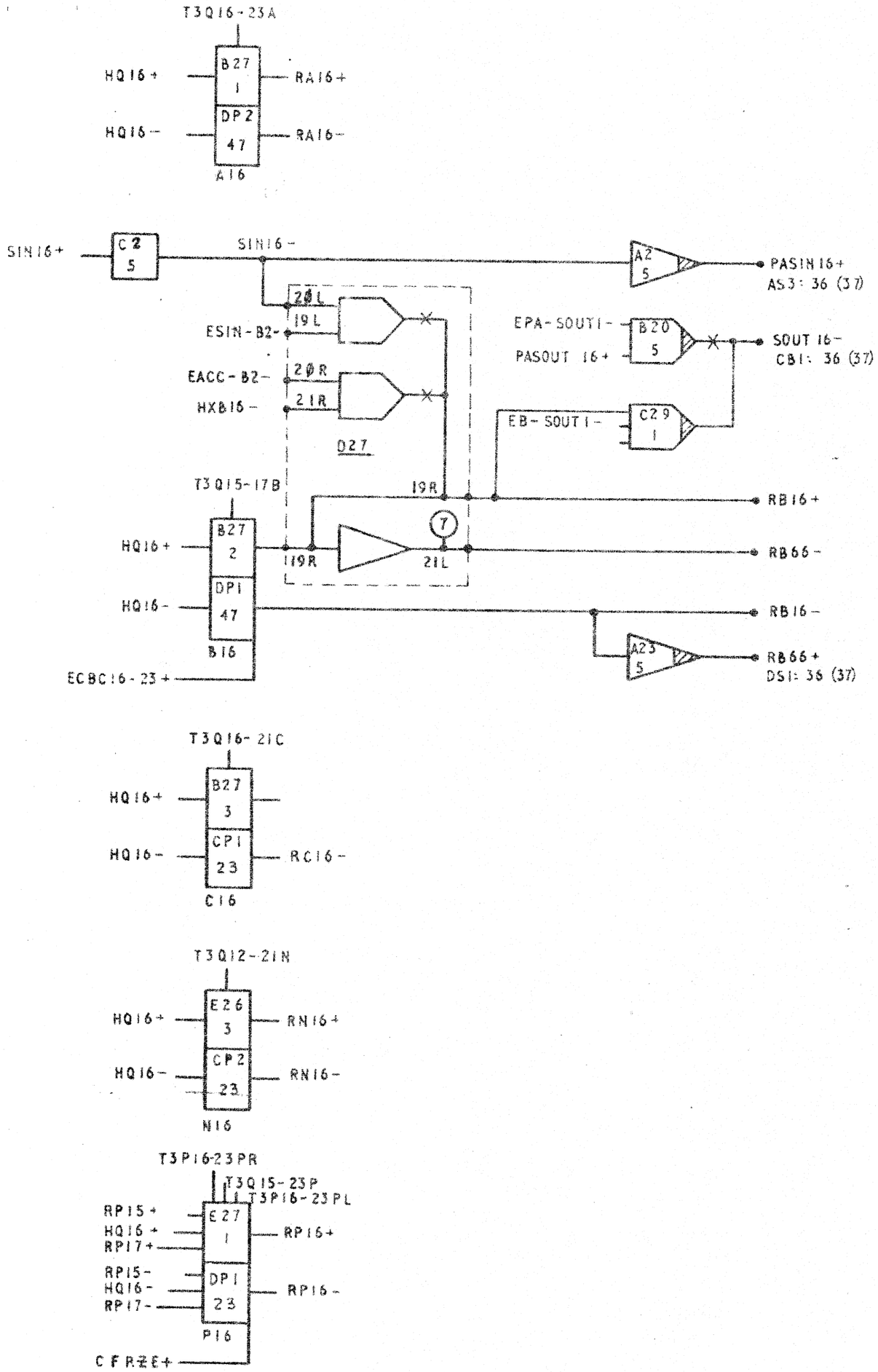

W.G.C. 02/160

STATS SLICE 16

SUB	ISS	1													
A.C.W.	0827	1565													
DATE	25/8/67	30/9/68													

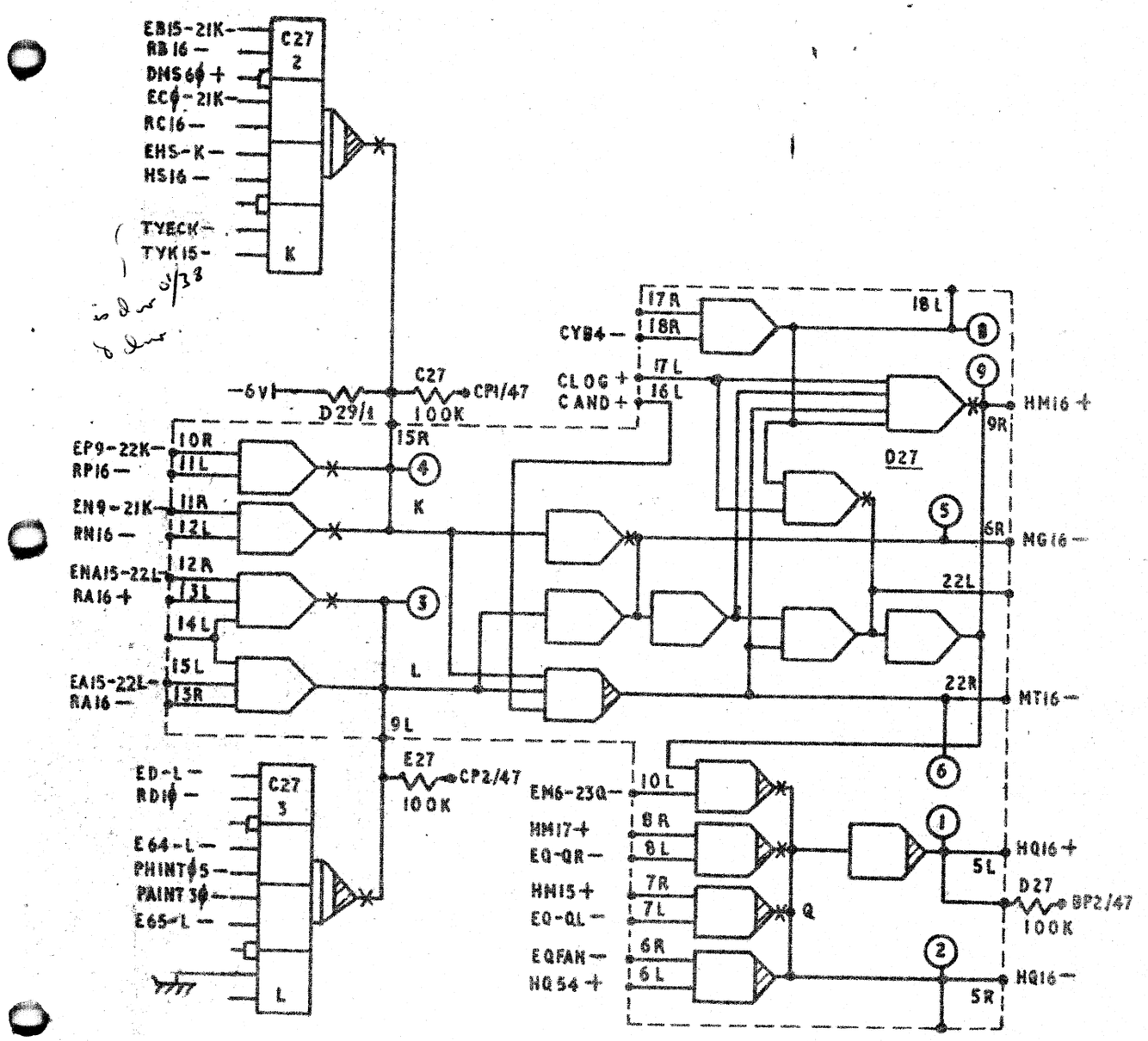

S. SLICE.

W.G.C.ϕ2/16

ISS	1												

17 Ø

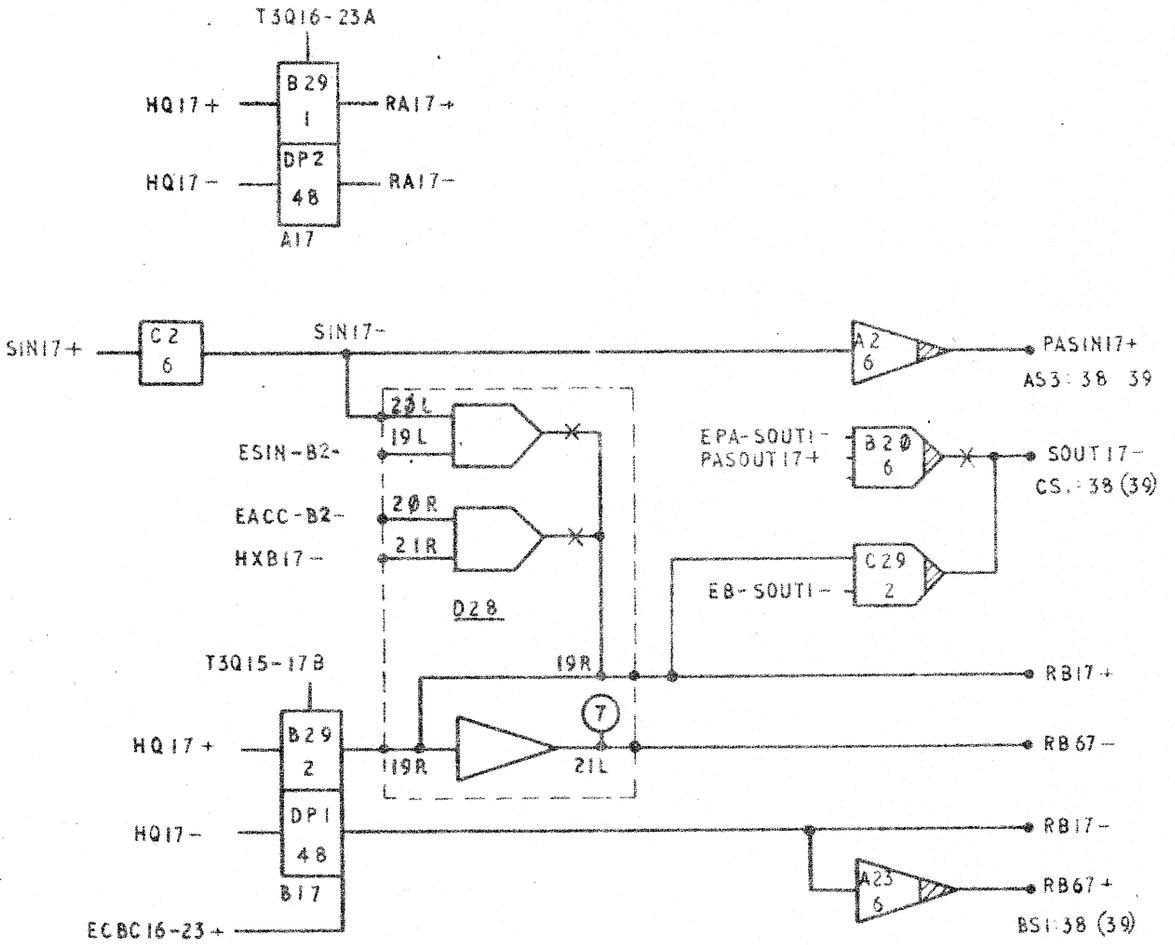

W.G.C. Ø2/17Ø

STATS. SLICE 17

SUB	ISS	1													
A.C.W.	0827	1565													
DATE	25/01	30/01													

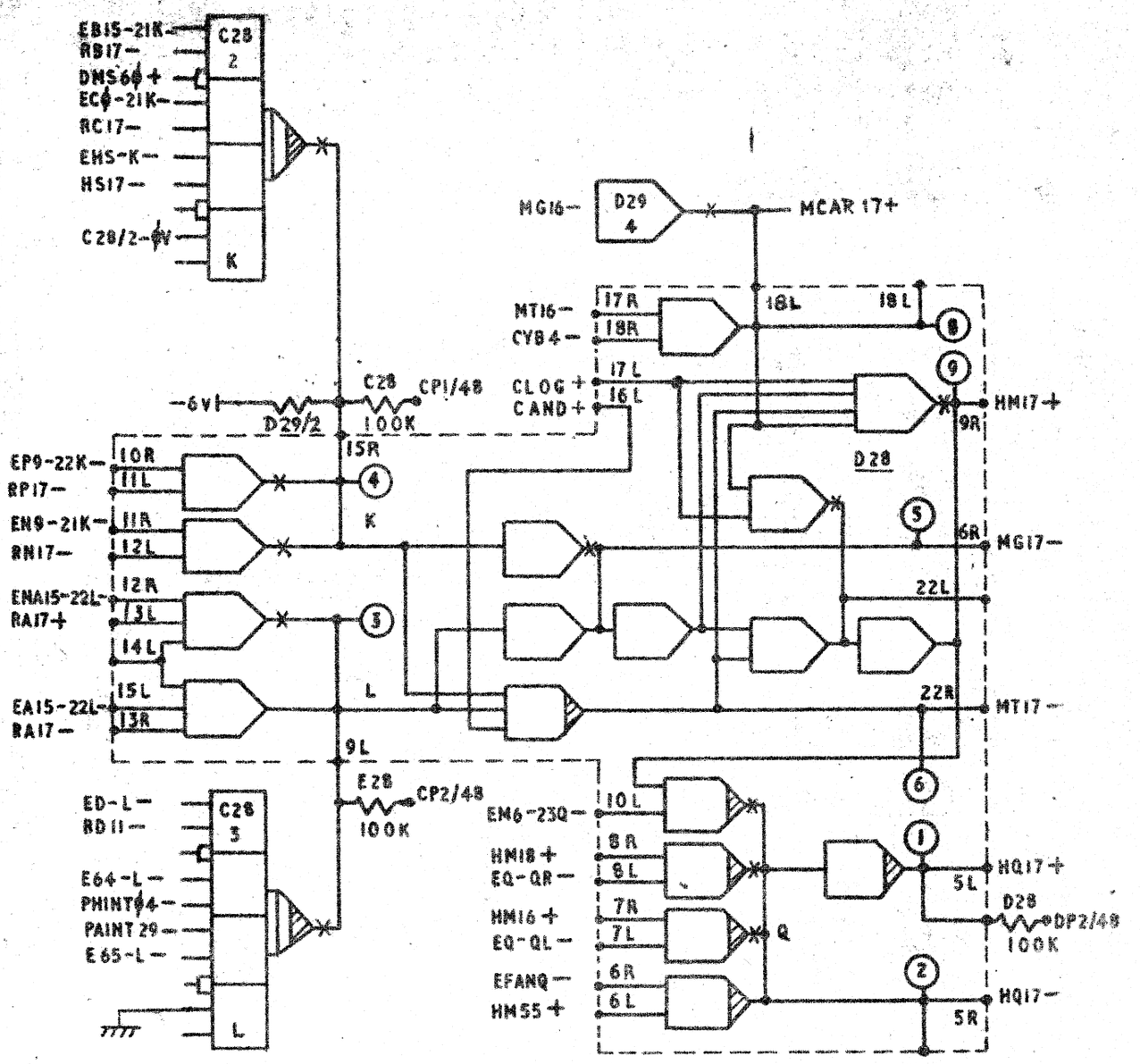
C28 2
K
EB15-21K
RB17
DMS6ϕ+
ECϕ-21K
RC17
EHS-K
HS17
C28/2-ϕV
D29 4
MG16
MCAR 17+
MT16
CYB4
CLOG+
CAND+
17R
18R
17L
16L
18L
8
9
9R
HM17+
D28
-6V
D29/2
C28
100K
CP1/48
15R
EP9-22K
RP17
EN9-21K
RN17
ENA15-22L
RA17+
EA15-22L
RA17
10R
11L
11R
12L
12R
13L
14L
15L
13R
4
K
3
L
9L
5
6R
MG17
22L
22R
MT17
6
ED-L
RD11
C28 3
E64-L
PHINTϕ4
PAINT29
E65-L
L
E28
100K
CP2/48
EM6-23Q
HM18+
EQ-QR
HM16+
EQ-QL
EFANQ
HM55+
10L
8R
8L
7R
7L
6R
6L
Q
1
5L
HQ17+
D28
100K
DP2/48
2
5R
HQ17

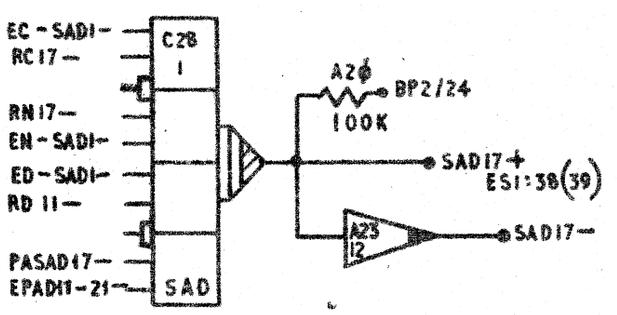
EC-SAD1
RC17
C28 1
RN17
EN-SADI
ED-SADI
RD11
PASAD17
EPAD11-21
SAD
A2ϕ
100K
BP2/24
SAD17+
ES1:38(39)
A23 12
SAD17

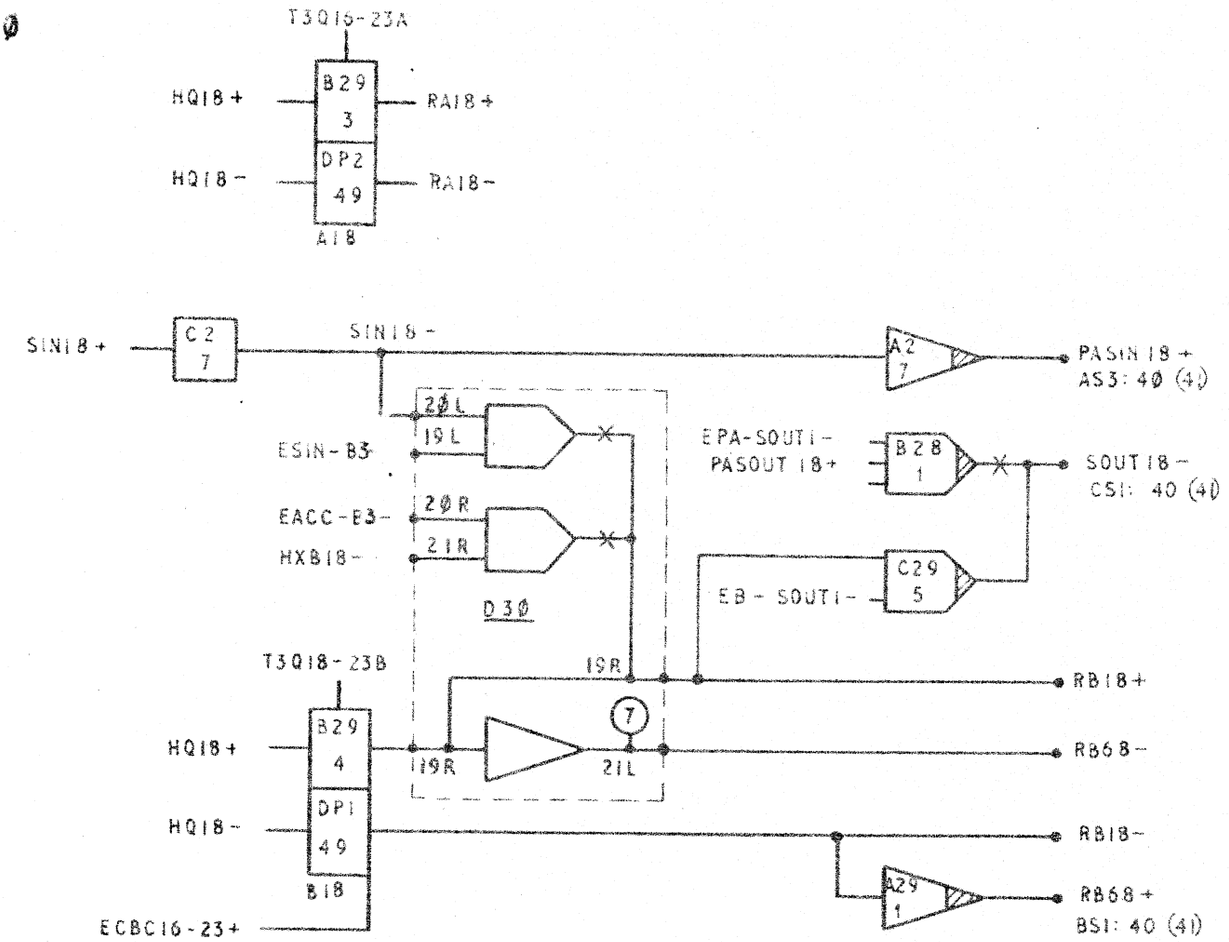

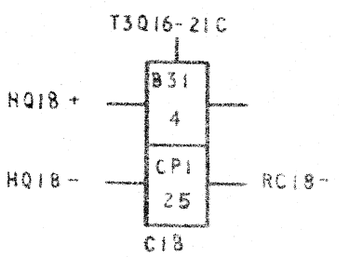

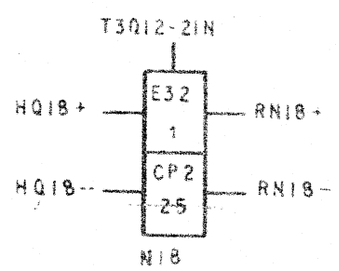

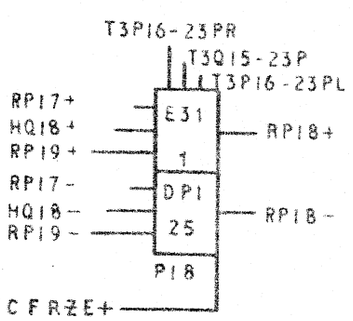

W.G.C. Ø2/18ø

STATS. SLICE 18

SUB	ISS	1													
A.C.W.	0827	1565													
DATE	25/8/-	30/9/-													

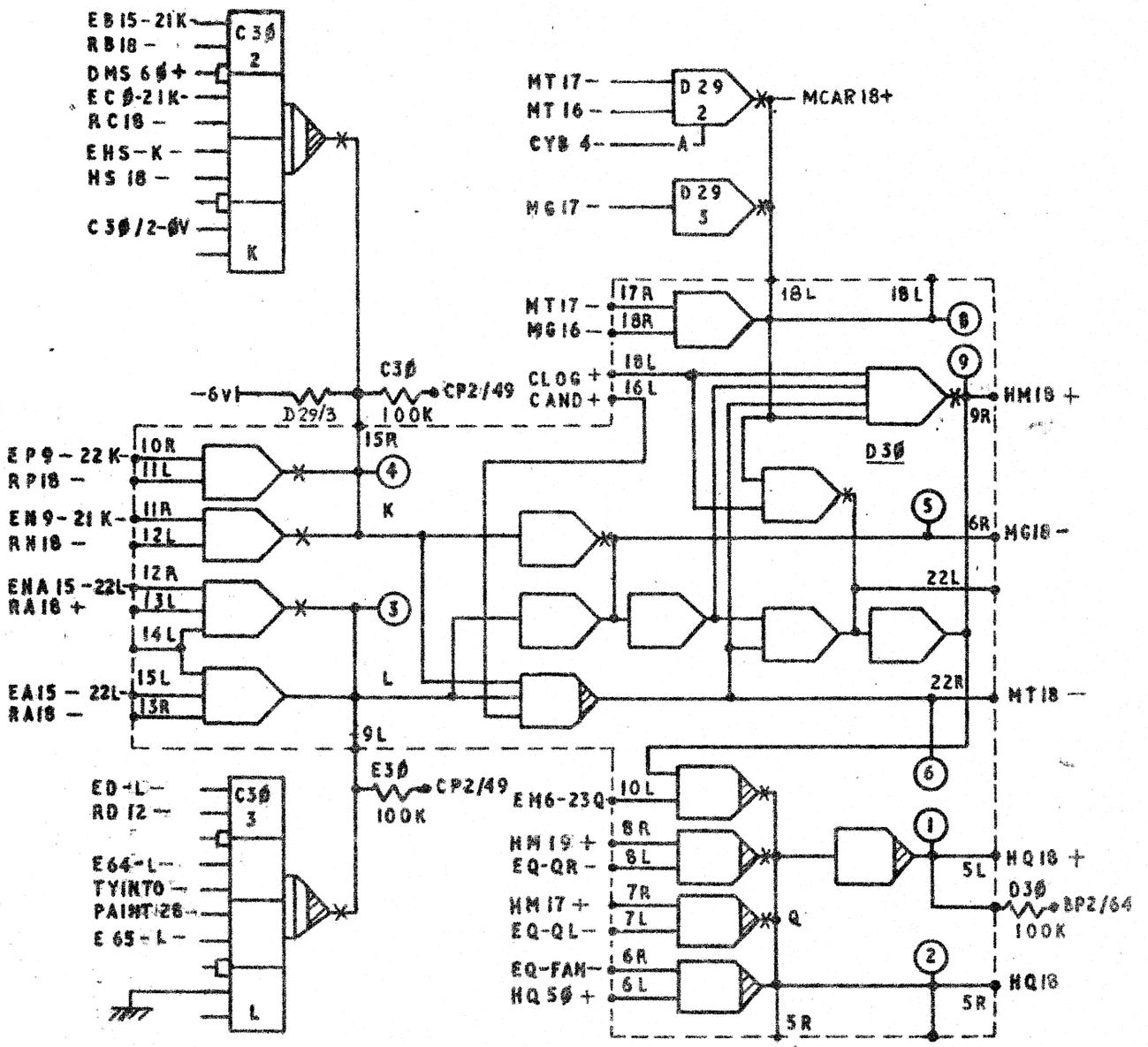
EB15-21K
RB18 -
DMS 6Ø+
ECØ-21K-
RC18 -
EHS-K -
HS 18 -
C3Ø/2-ØV
C3Ø
2
K
MT17 -
MT16 -
CYB 4-
A
D29
2
MCAR18+
MG17 -
D29
3
MT17 -
MG16 -
17R
18R
18L
18L
8
9
CLOG +
CAND +
18L
16L
-6V
D29/3
C3Ø
100K
CP2/49
15R
HM18 +
9R
D3Ø
EP9 - 22K
RP18 -
10R
11L
4
K
EN9 - 21K
RN18 -
11R
12L
5
6R
MG18 -
ENA15 -22L
RA18 +
12R
13L
14L
3
22L
EA15 - 22L
RA18 -
15L
13R
L
22R
MT18 -
9L
6
E3Ø
100K
CP2/49
ED-L-
RD12 -
C3Ø
3
E64-L-
TYINTO -
PAINT/26-
E65-L-
L
EM6-23Q
10L
HM19 +
EQ-QR -
8R
8L
1
5L
HQ18 +
D3Ø
100K
BP2/64
HM17 +
EQ-QL -
7R
7L
Q
EQ-FAM-
HQ5Ø +
6R
6L
2
HQ18
5R
5R

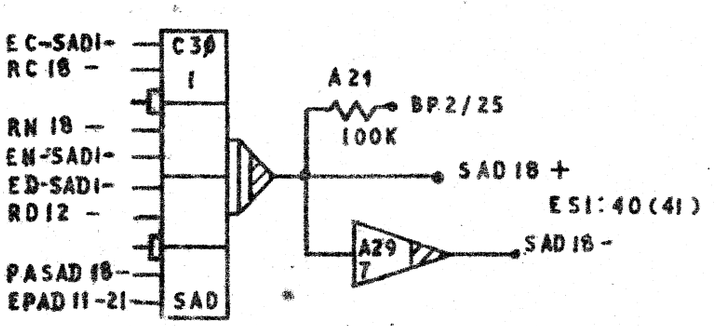
EC-SADI-
RC18 -
C3Ø
1
RN18 -
EM-SADI-
ED-SADI-
RD12 -
PASAD18-
EPAD11-21-
SAD
A21
100K
BP2/25
SAD18 +
ES1:40(41)
A29
7
SAD18 -

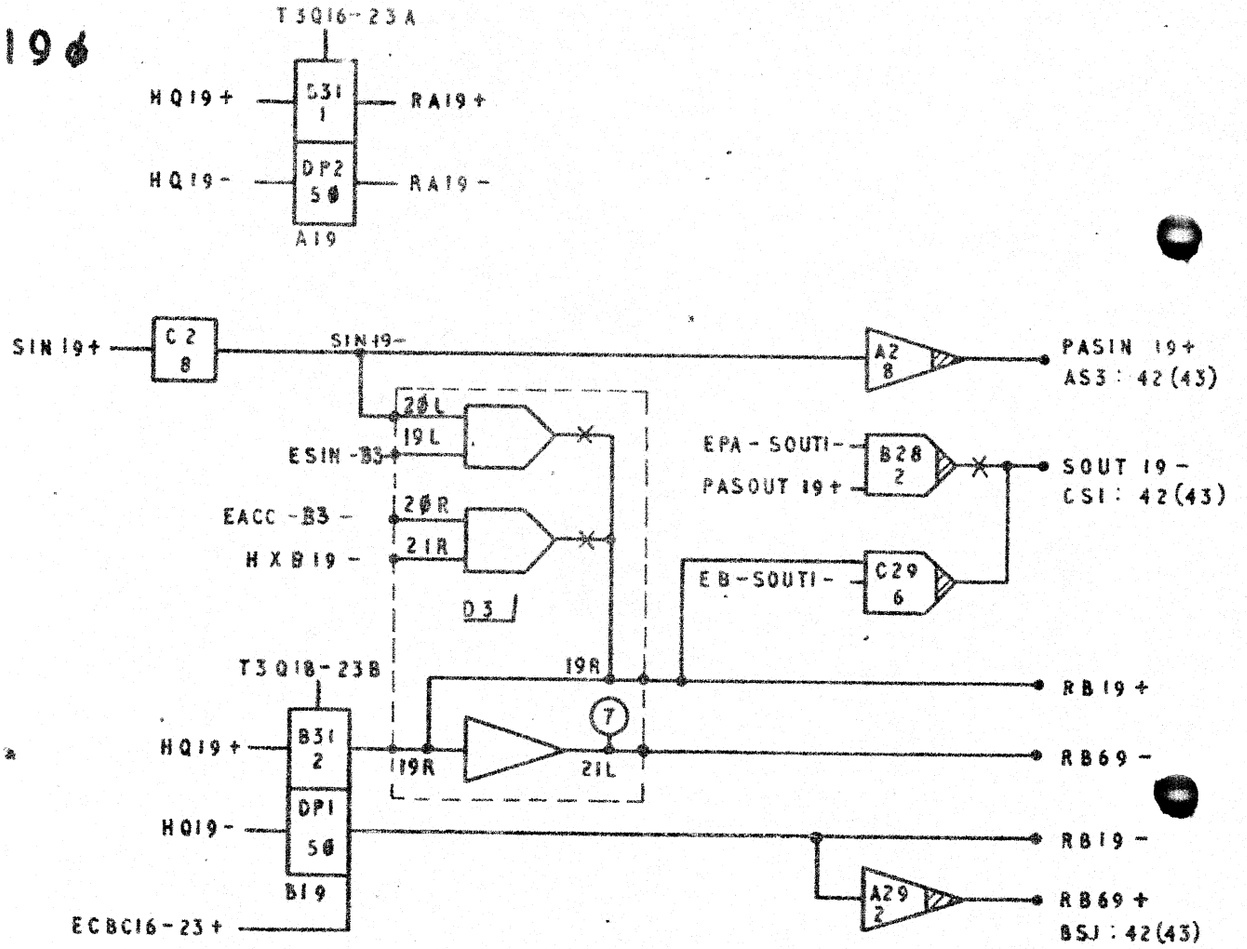
T3Q16-23A
HQ19+
B31 1
RA19+
HQ19-
DP2 50
RA19-
A19
SIN19+
C2 8
SIN19-
A2 8
PASIN 19+
AS3 : 42(43)
20L
19L
ESIN-B3-
EPA-SOUTI-
B28 2
PASOUT 19+
SOUT 19-
CSI : 42(43)
20R
EACC-B3-
21R
HXB19-
D3
EB-SOUTI-
C29 6
T3Q18-23B
19R
RB19+
HQ19+
B31 2
7
19R
21L
RB69-
HQ19-
DP1 50
RB19-
B19
A29 2
RB69+
ECBC16-23+
BSJ : 42(43)

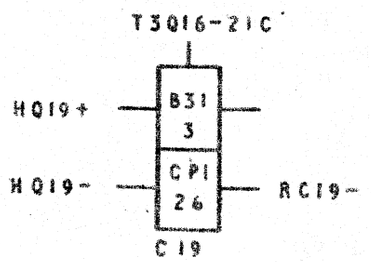
T3Q16-21C
HQ19+
B31 3
HQ19-
CP1 26
RC19-
C19

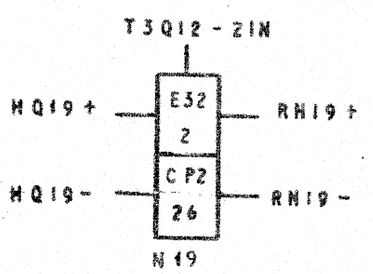
T3Q12-21N
HQ19+
E32 2
RN19+
HQ19-
CP2 26
RN19-
N19

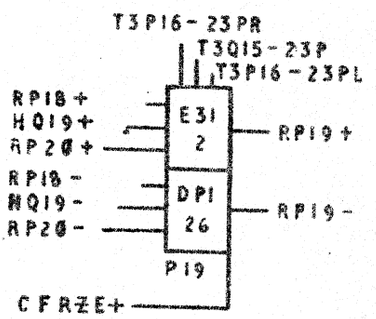
T3P16-23PR
T3Q15-23P
T3P16-23PL
RP18+
HQ19+
RP20+
E31 2
RP19+
RP18-
HQ19-
RP20-
DP1 26
RP19-
P19
CFRZE+

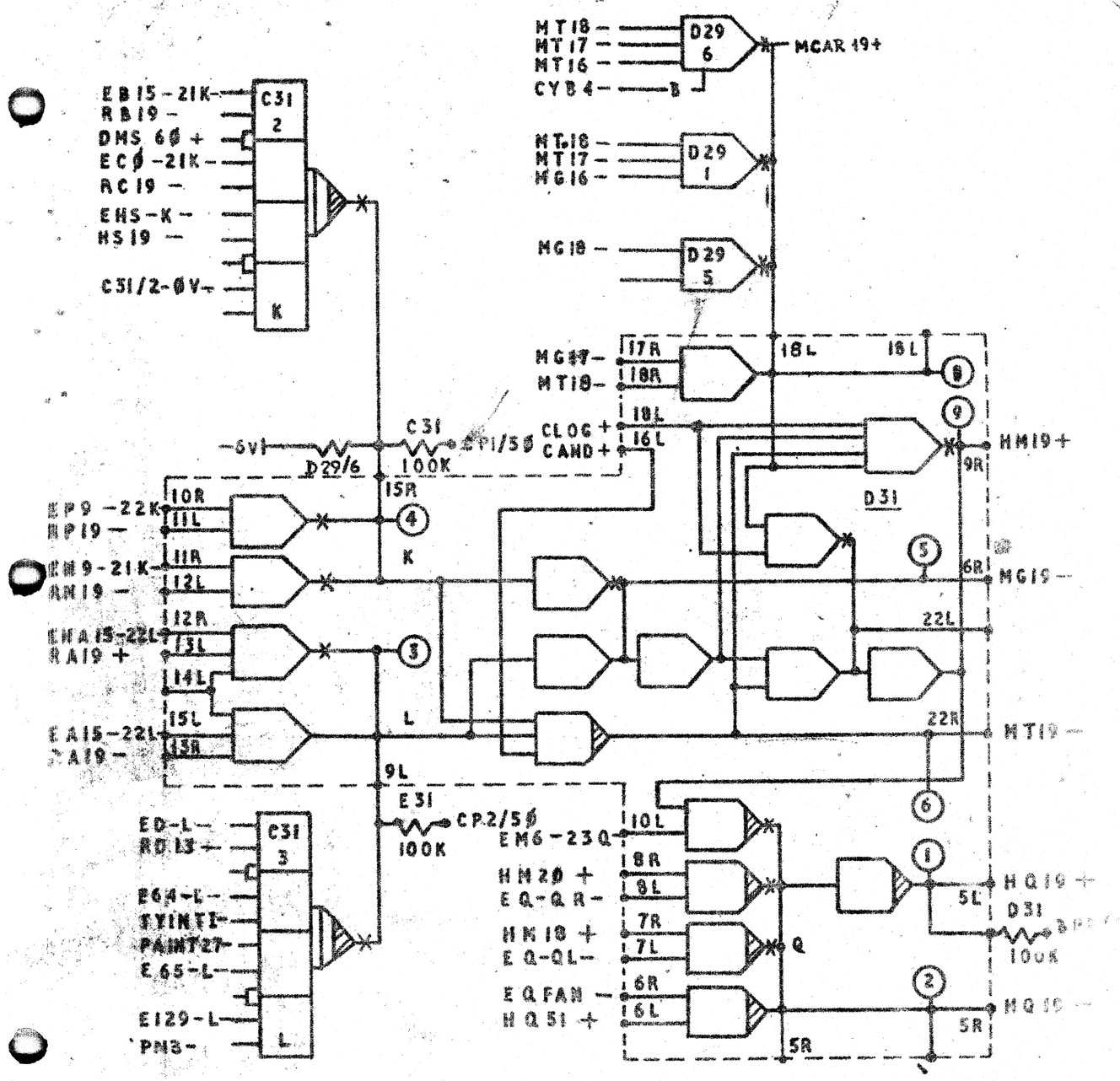
MT18 –
MT17 –
MT16 –
CYB4 –
B
D29 6
MCAR 19+
MT18 –
MT17 –
MG16 –
D29 1
MG18 –
D29 5
EB15-21K
RB19 –
DMS 60 +
EC0-21K
RC19 –
EHS-K –
HS19 –
C31/2-0V
C31 2
K
MG17 –
MT18 –
17R
18R
18L
18L
8
9
CLOG +
CAND +
18L
16L
HM19 +
9R
D31
-6V
D29/6
C31
100K
CP1/50
15R
EP9 -22K
RP19 –
10R
11L
4
K
EM9-21K
RM19 –
11R
12L
5
6R
MG19 –
EHA15-22L
RA19 +
12R
13L
3
14L
22L
15L
EA15-22L
RA19 –
13R
L
22R
MT19 –
9L
6
E31
CP2/50
100K
ED-L –
RD13 +
C31 3
E64-L –
EYINTI –
PAINT27 –
E65-L –
E129-L –
PM3 –
L
EM6-23Q
10L
HM20 +
EQ-QR –
8R
8L
1
HM18 +
EQ-QL –
7R
7L
Q
EQFAN –
HQ51 +
6R
6L
2
5R
5L
HQ19 +
D31
100K
HQ19 –
EC-SADI
RC19 –
C31 1
RN19 –
EN-SADI
ED-SADI
RD13 –
PASADI9
EPADII-21
SAD
A22
100K
BP2/26
SAD19 +
ESI:42(43)
A29 8
SAD19 –
INTU –
G15 3
INTP3+
HQ19 –
B
(F22)

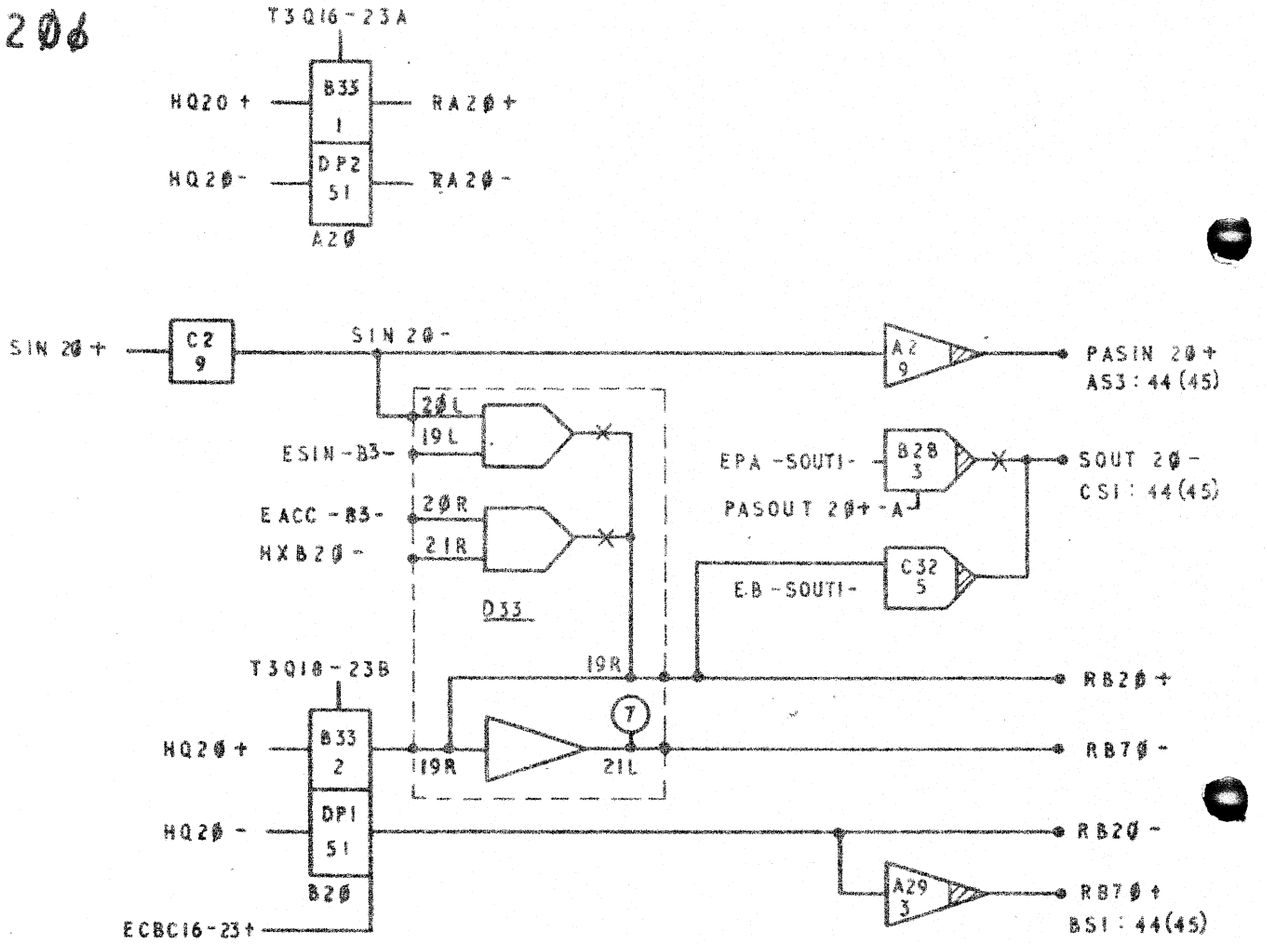

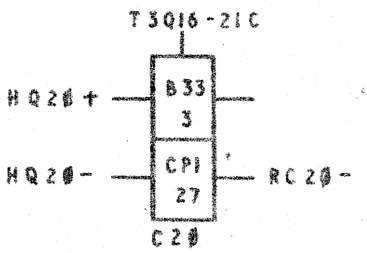

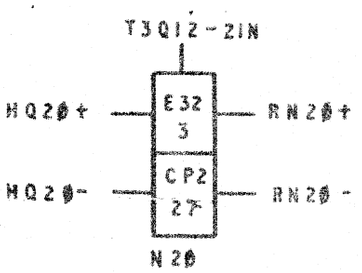

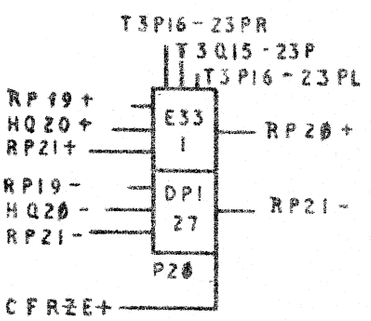

SUB	ISS	1
A.C.W.	0827	1565
DATE	25/8/67	30/9/68

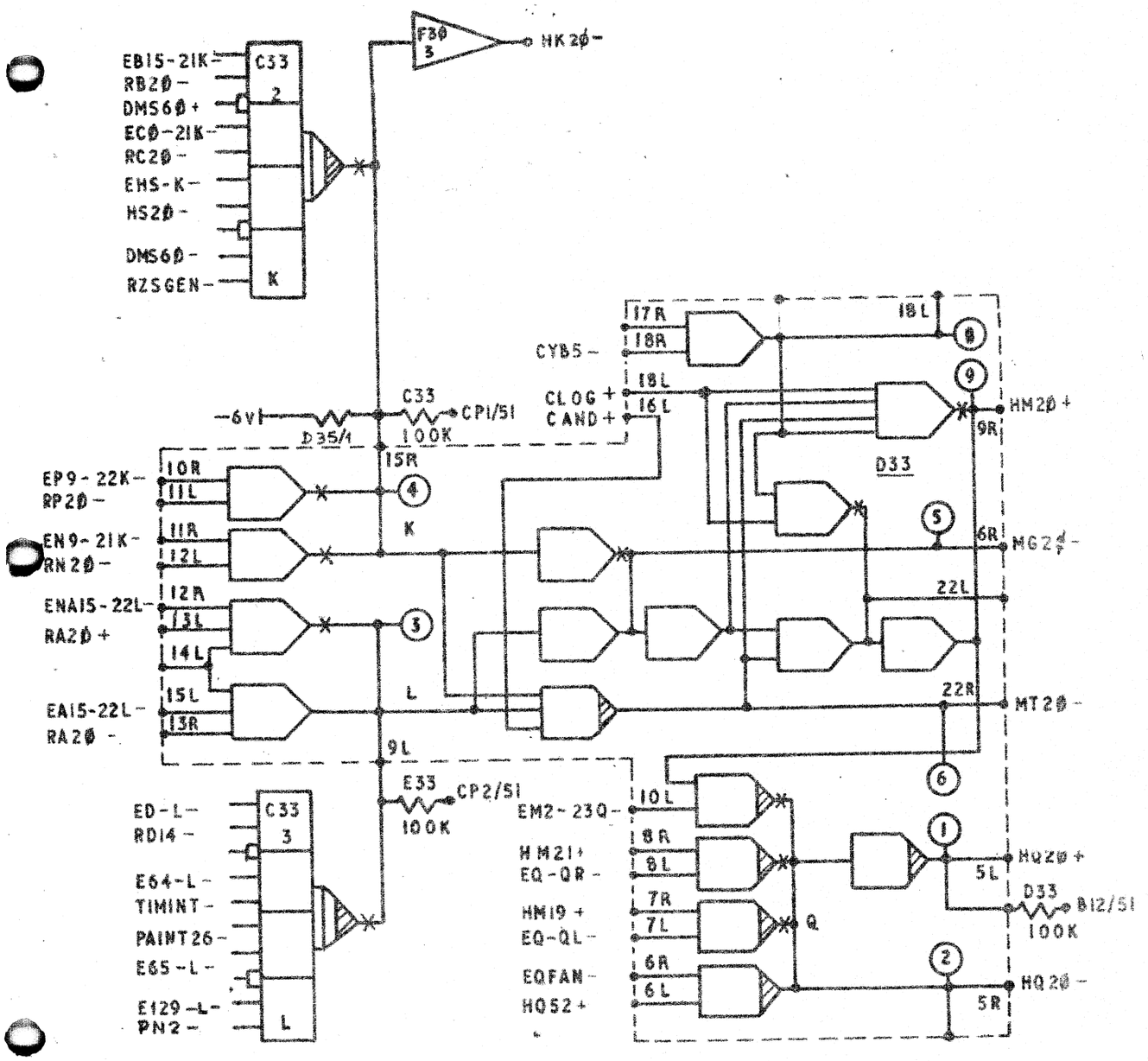
EB15-21K
RB20
DMS60+
EC0-21K
RC20
EHS-K
HS20
DMS60
RZSGEN
C33
2
K
F30
3
HK20
-6V
D35/1
C33
100K
CP1/51
15R
K
EP9-22K
RP20
EN9-21K
RN20
ENA15-22L
RA20+
EA15-22L
RA20
10R
11L
11R
12L
12R
13L
14L
15L
13R
L
9L
CYB5
17R
18R
18L
16L
CLOG+
CAND+
18L
16L
9R
HM20+
D33
6R
MG2
22L
22R
MT20
E33
100K
CP2/51
ED-L
RD14
E64-L
TIMINT
PAINT26
E65-L
E129-L
PN2
C33
3
L
EM2-23Q
10L
HM21+
EQ-QR
8R
8L
HM19+
EQ-QL
7R
7L
EQFAN
HQ52+
6R
6L
Q
5L
HQ20+
D33
B12/51
100K
HQ20
5R

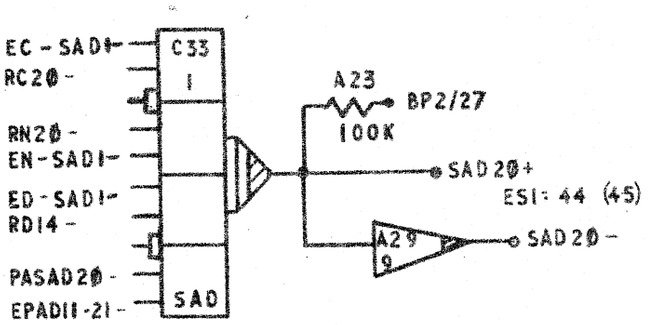
EC-SAD1
RC20
RN20
EN-SAD1
ED-SAD1
RD14
PASAD20
EPADII-21
C33
1
SAD
A23
100K
BP2/27
SAD20+
ESI: 44 (45)
A29
9
SAD20

INTU
HQ20
G20
5
INTP2+

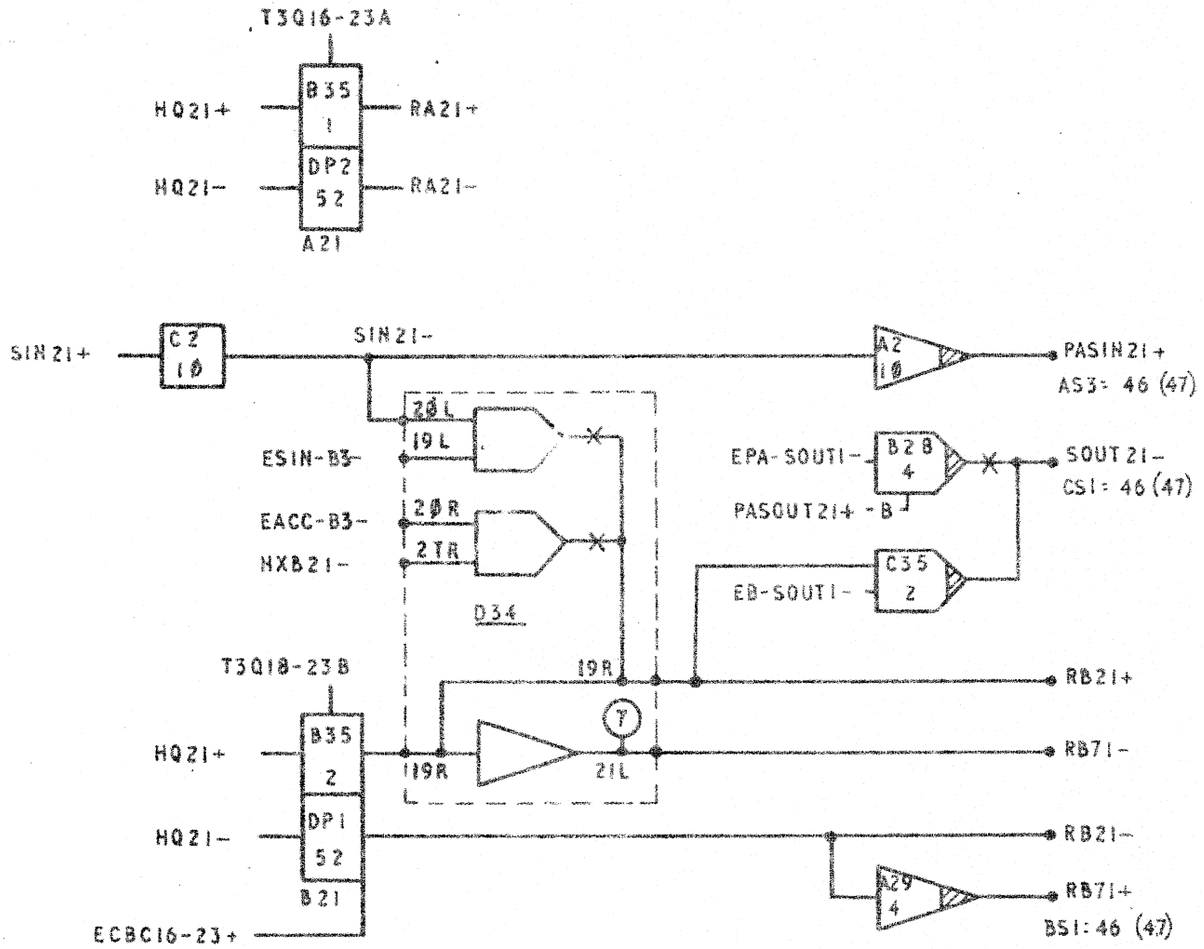

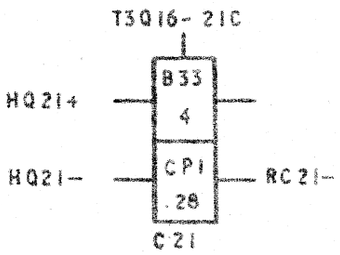

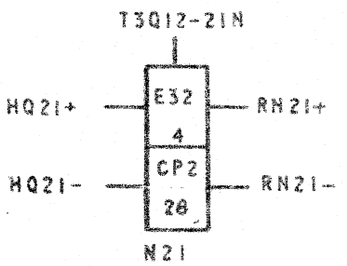

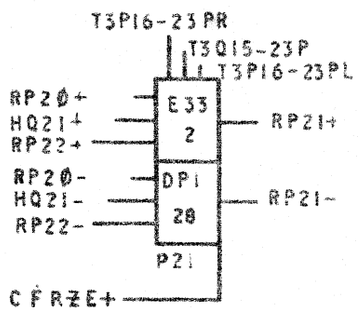

W.G.C. 02/210 STATS SLICE 21

SUB	ISS	1													
A.C.W.	0827	1565													
DATE	25/8/67	30/9/68													

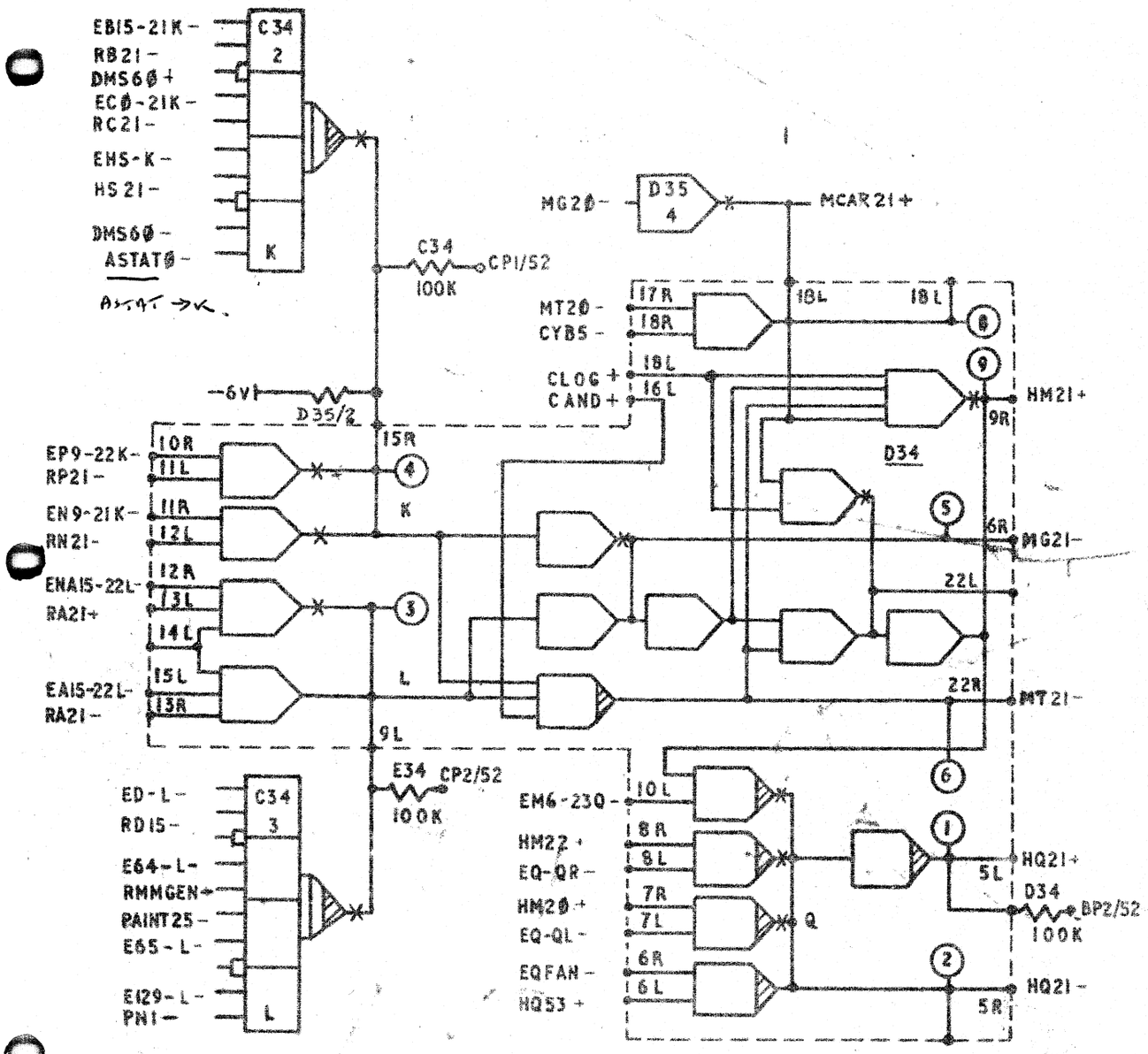
EB15-21K-
RB21-
DMS6Ø+
ECØ-21K-
RC21-
EHS-K-
HS21-
DMS6Ø-
ASTATØ-
C34
2
K
ASTAT → K.
C34
100K
CP1/52
MGØ2Ø-
D35
4
MCAR21+
MT2Ø-
CYB5-
17R
18R
18L
18L
CLOG+
CAND+
18L
16L
HM21+
9R
-6V
D35/2
15R
EP9-22K-
RP21-
10R
11L
EN9-21K-
RN21-
11R
12L
ENA15-22L-
RA21+
12R
13L
14L
EA15-22L-
RA21-
15L
13R
K
L
9L
D34
6R
MG21-
22L
22R
MT21-
E34
CP2/52
100K
ED-L-
RD15-
E64-L-
RMMGEN+
PAINT25-
E65-L-
E129-L-
PN1-
C34
3
L
EM6-23Q-
HM22+
EQ-QR-
HM2Ø+
EQ-QL-
EQFAN-
HQ53+
10L
8R
8L
7R
7L
6R
6L
Q
HQ21+
5L
D34
BP2/52
100K
HQ21-
5R

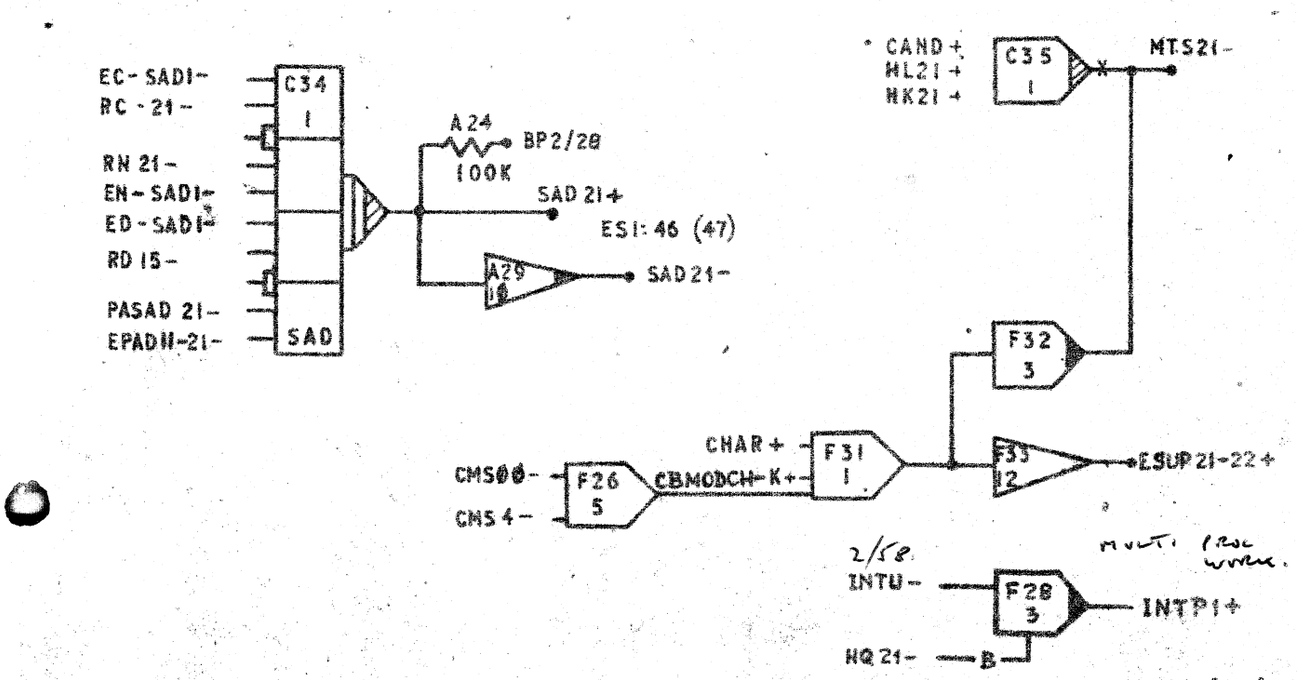
EC-SAD1-
RC-21-
RN21-
EN-SAD1-
ED-SAD1-
RD15-
PASAD21-
EPADH-21-
C34
1
SAD
A24
100K
BP2/28
SAD21+
ES1:46 (47)
A29
SAD21-
CAND+
HL21+
HK21+
C35
1
MTS21-
F32
3
CHAR+
CBMODCH-K+
F31
1
F33
12
ESUP21-22+
CMSØØ-
CMS4-
F26
5
2/58
INTU-
F28
3
INTP1+
HQ21-
B
MULTI PROC WORK.
SLICE 21
W.G.C.Ø2/21
1SS
1
2
3

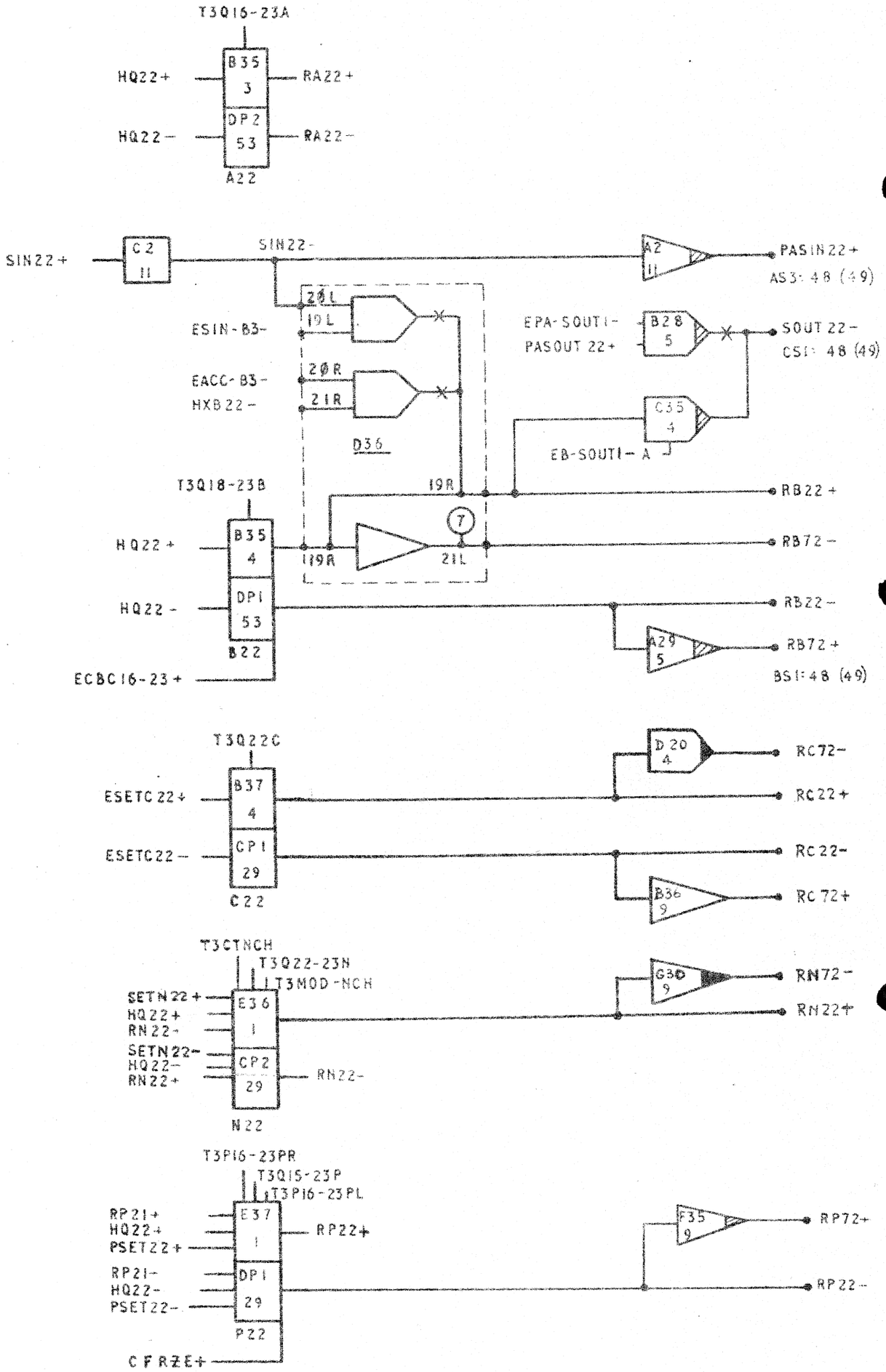

W.G.C. 02/220

STATS SLICE 22

SUB	ISS	1	2	3											
A.C.W.	0827	0930	0963	1565											
DATE	25/8/67	2/1/68	12/3/68	30/9/68											

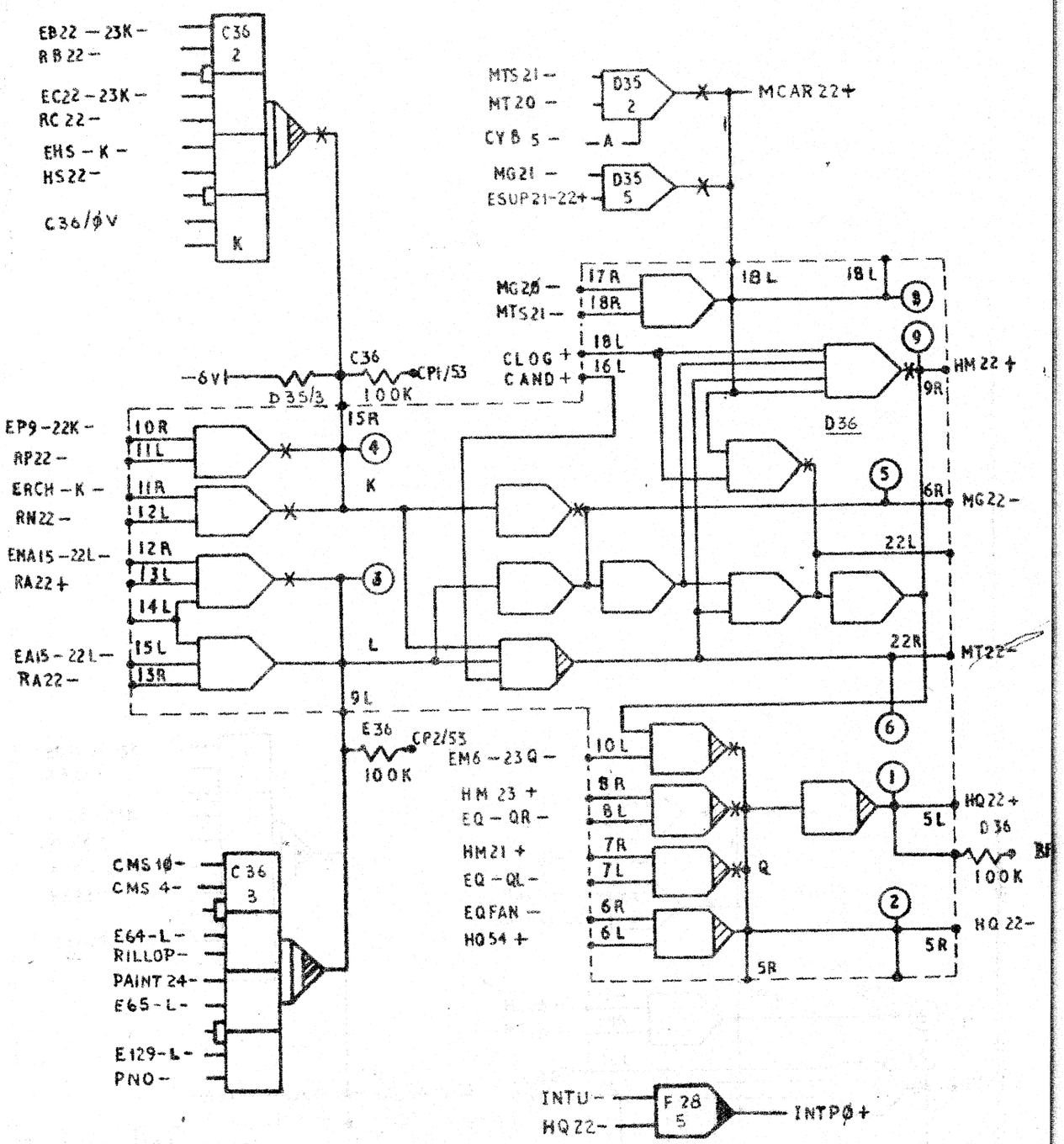

GATES SLICE 22

W.G.C.Ø·2

GATES SLICE 22

SUB.	ISS.	1

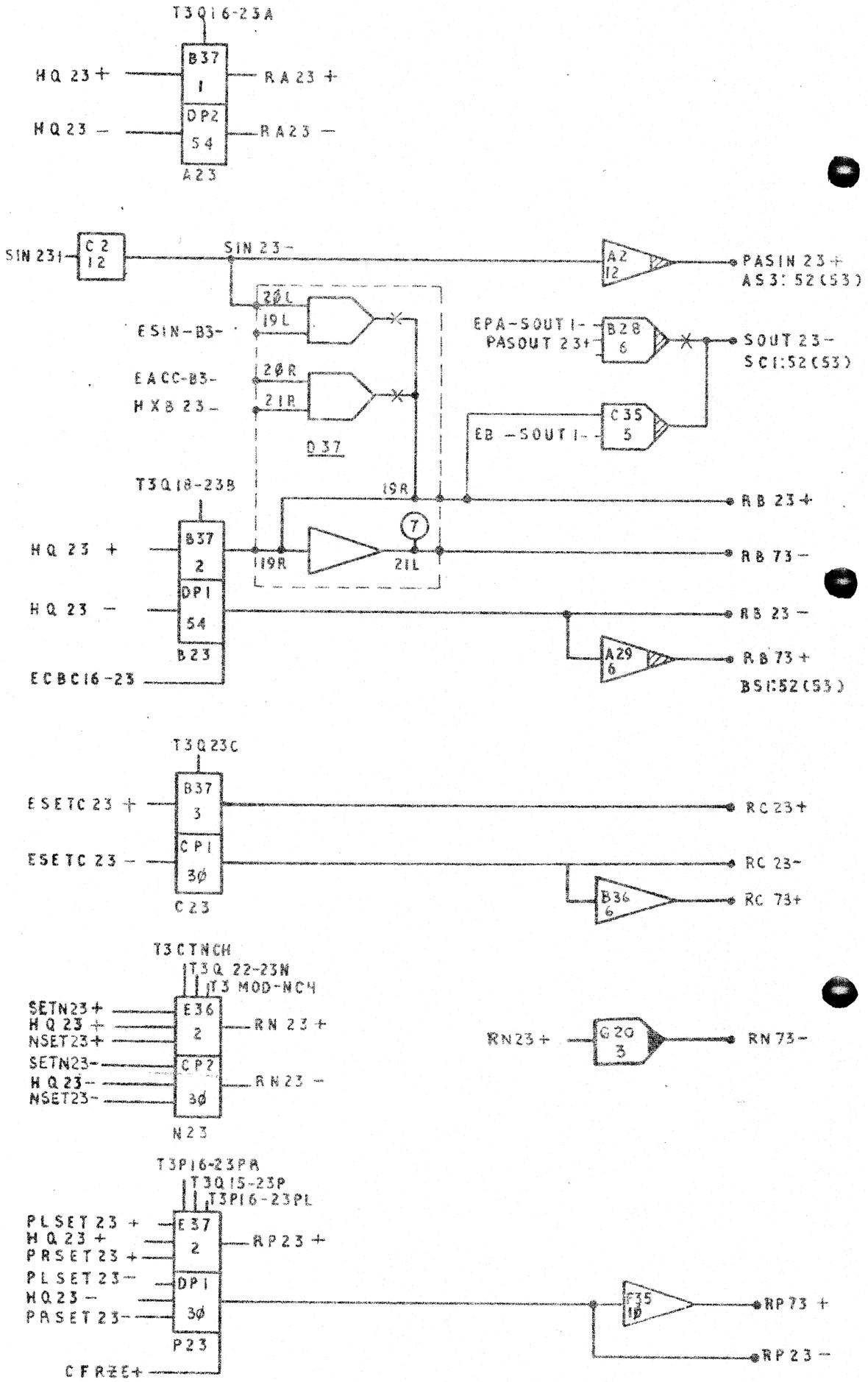

W.G.C. Ø2/23Ø

STATS SLICE 2

SUB	ISS	1	2												
A.C.W.	0827	0930	1565												
DATE	25/8/6	2/11/6	30/9/6												

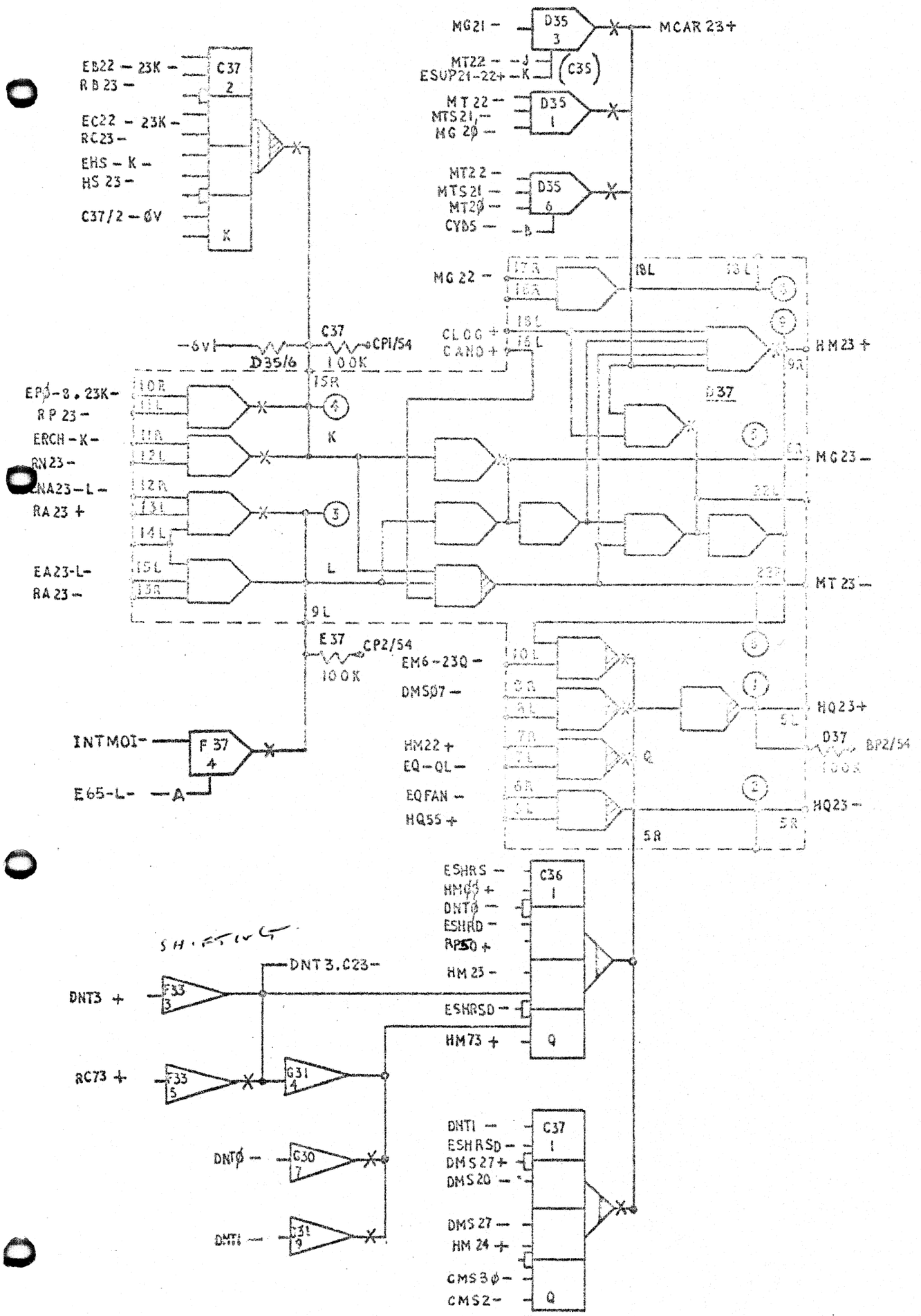

DATES SLICE 23

ISS	1	2	3
DEC27	0095	0900	0930

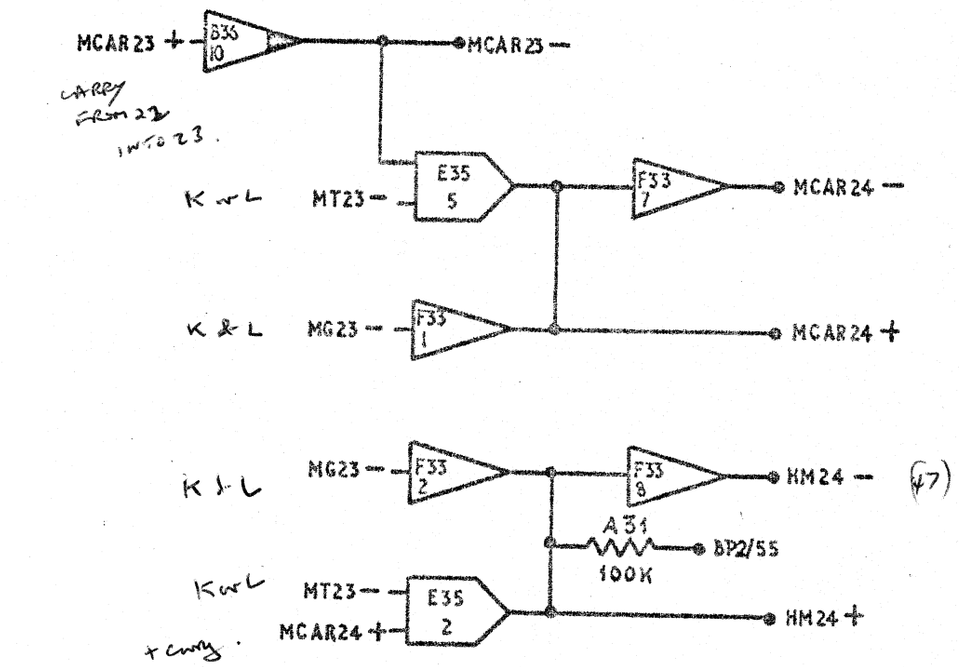

(47)

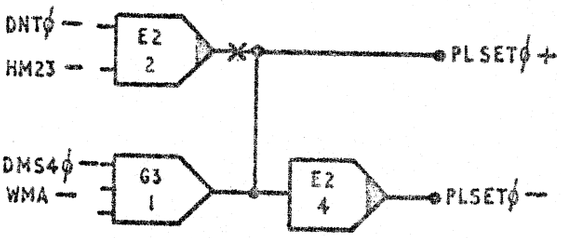

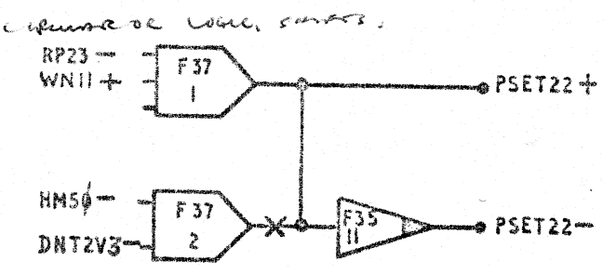

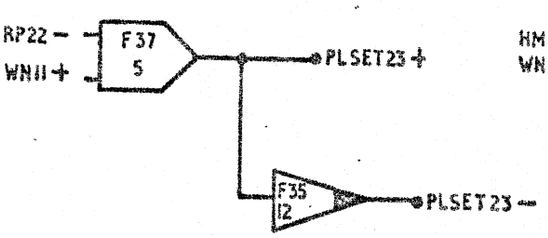

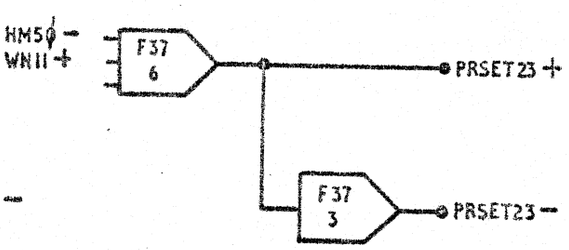

MILL SLICE 24 & P REGISTER END CONDITIONS.

WGCϕ2/24

SUB.	ISS														
A.C.W.	0827														

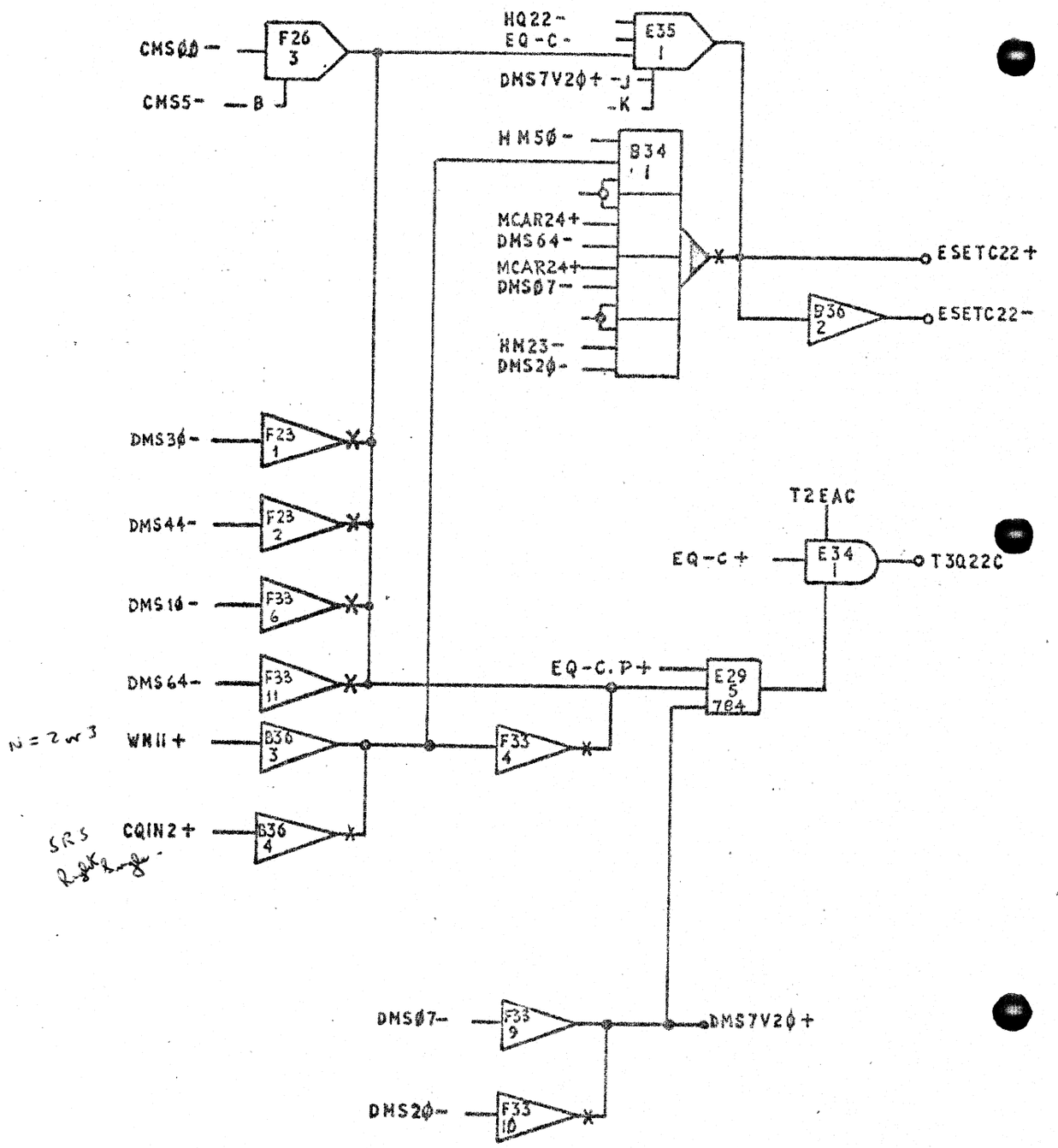

CARRY GATES TO C22.

WGCØ2/25

SUB.	1SS
A.C.W.	0827

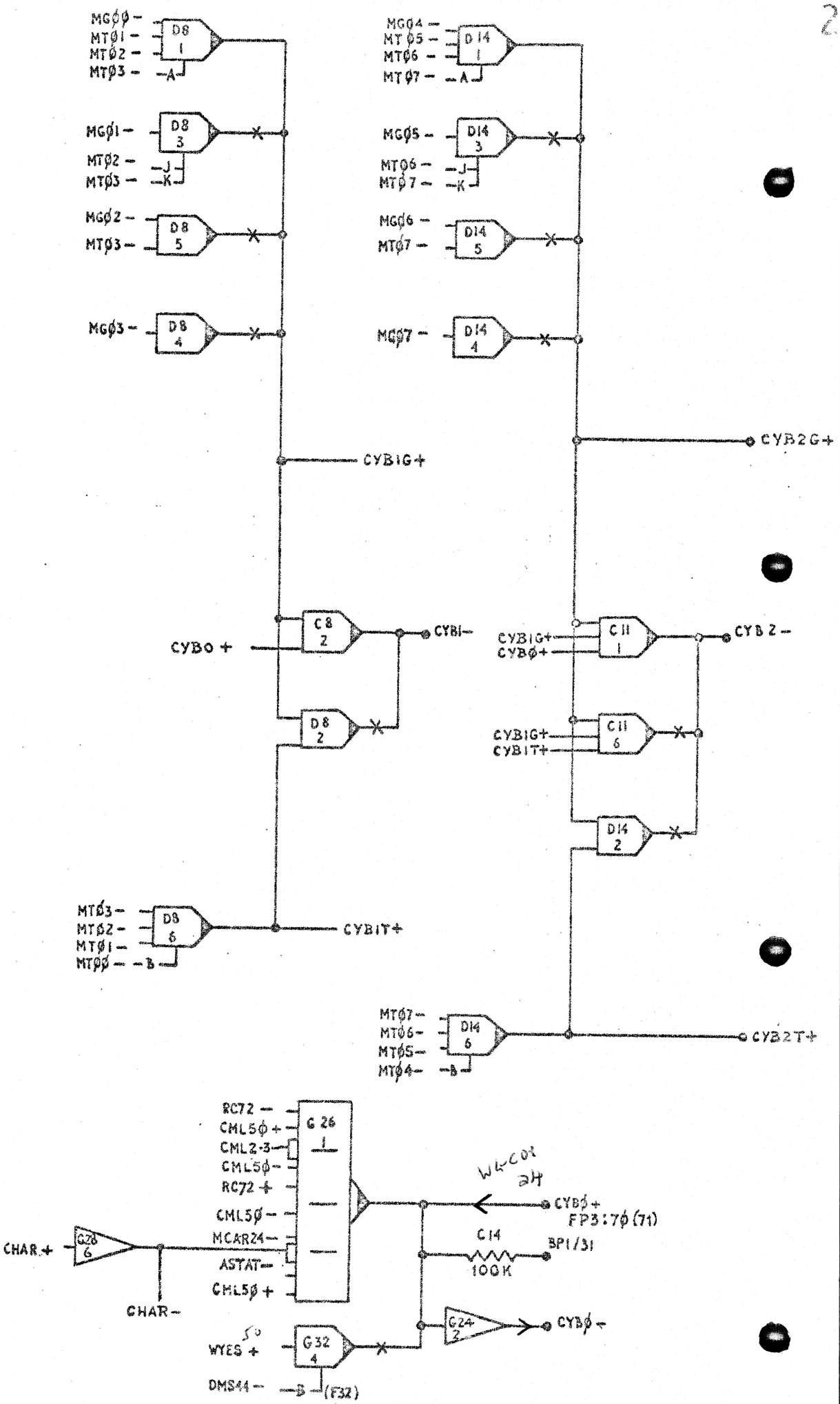

CYBØ	&	BLOCK	CARRY													WGC Ø2 / 27
SUB	1SS															
ACW	0827															

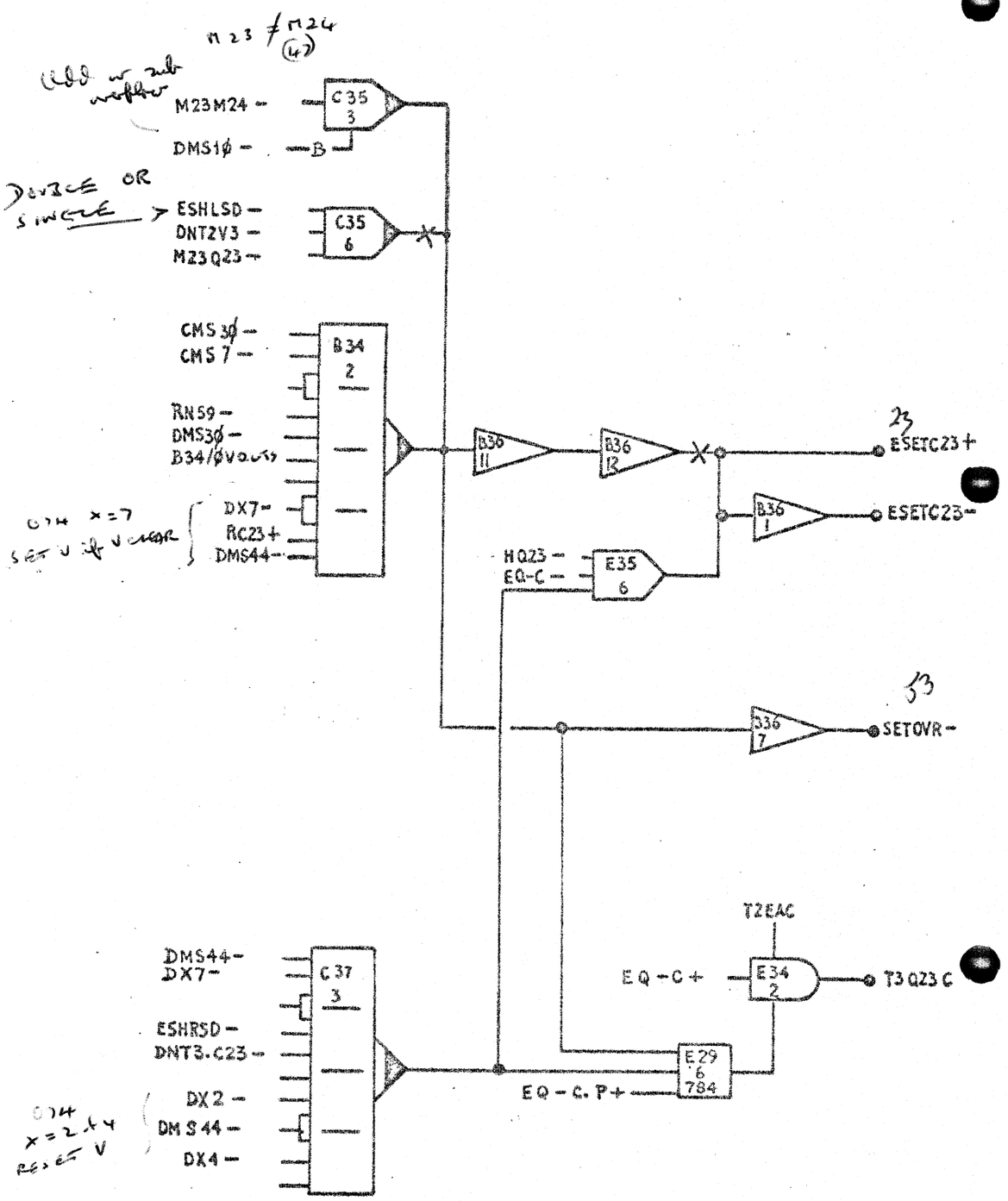

OVERFLOW GATES TO C23

WGC Ø2/26

SUB	ISS													
SW	0027													

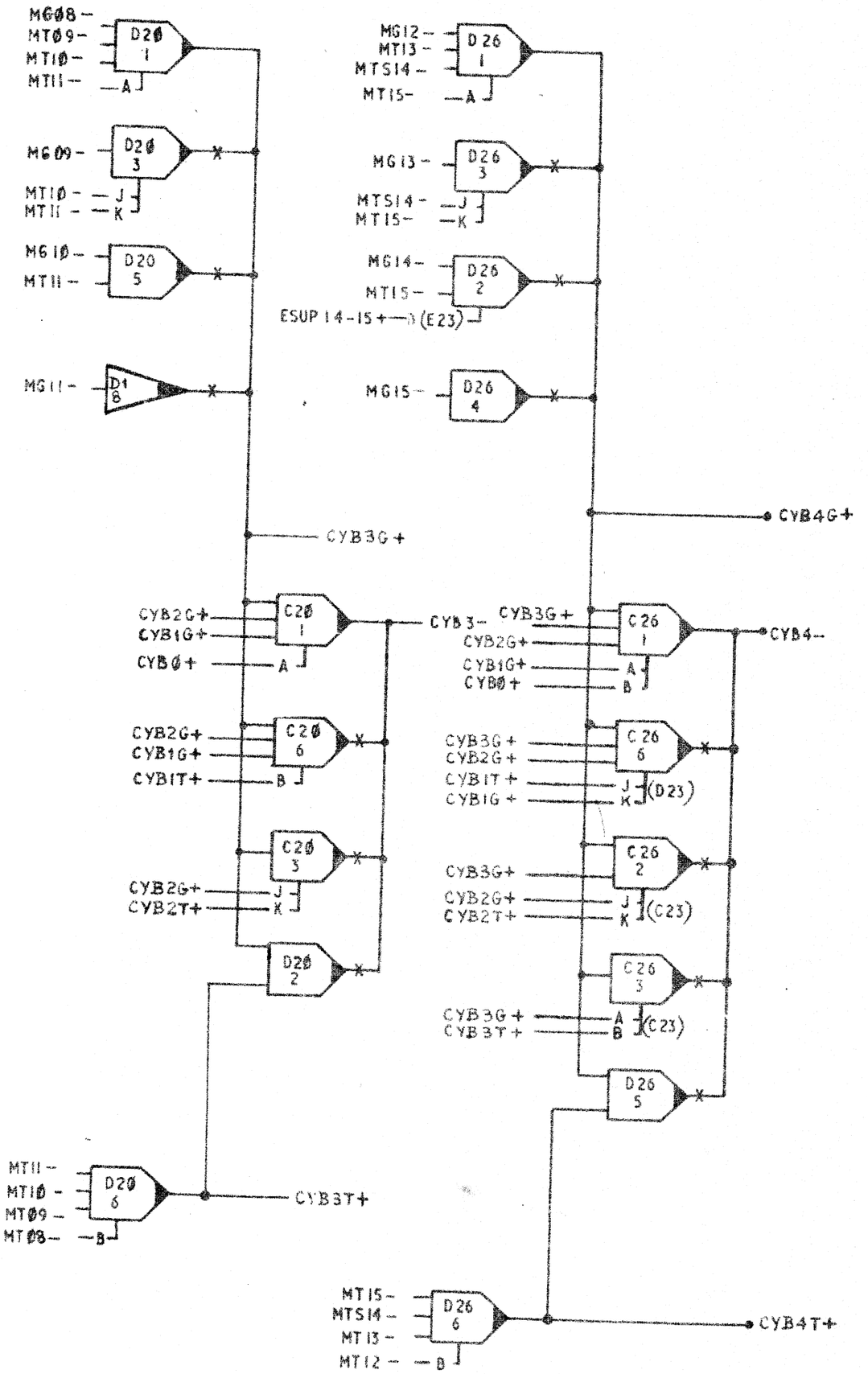
MG08 –
MT09 –
MT10 –
MT11 –
D20 1
A
MG09 –
D20 3
MT10 –
MT11 –
J
K
MG10 –
MT11 –
D20 5
MG11 –
D1 8
MG12 –
MT13 –
MTS14 –
MT15 –
D26 1
A
MG13 –
D26 3
MTS14 –
MT15 –
J
K
MG14 –
MT15 –
D26 2
ESUP 14-15 + (E23)
MG15 –
D26 4
CYB3G +
CYB4G +
CYB2G +
CYB1G +
CYB0 +
C20 1
A
CYB3 –
CYB3G +
CYB2G +
CYB1G +
CYB0 +
C26 1
A
B
CYB4 –
CYB2G +
CYB1G +
CYB1T +
C20 6
B
CYB3G +
CYB2G +
CYB1T +
CYB1G +
C26 6
J
K
(D23)
C20 3
CYB2G +
CYB2T +
J
K
CYB3G +
CYB2G +
CYB2T +
C26 2
J
K
(C23)
D20 2
C26 3
CYB3G +
CYB3T +
A
B
(C23)
D26 5
MT11 –
MT10 –
MT09 –
MT08 –
D20 6
B
CYB3T +
MT15 –
MTS14 –
MT13 –
MT12 –
D26 6
B
CYB4T +

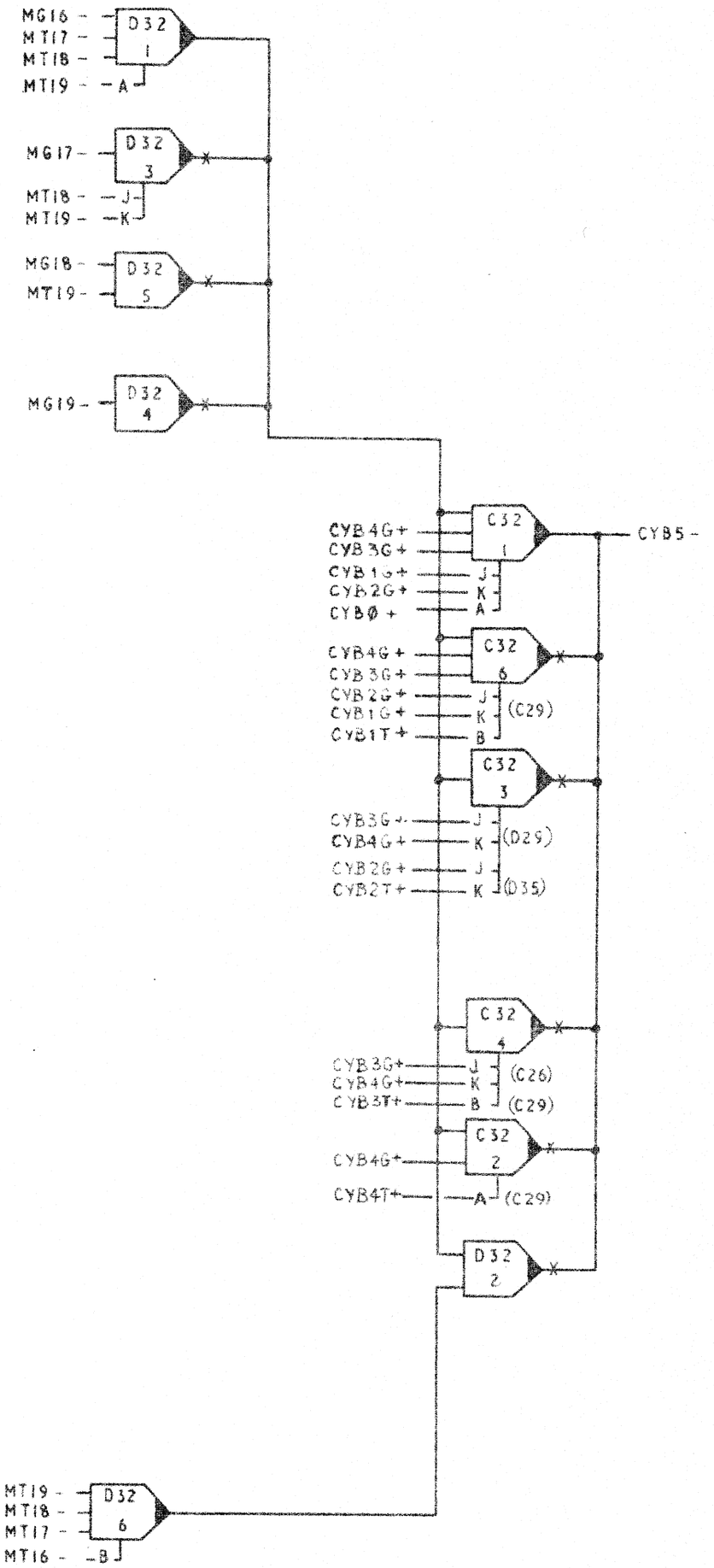

Block Carry

WGCØ2/29

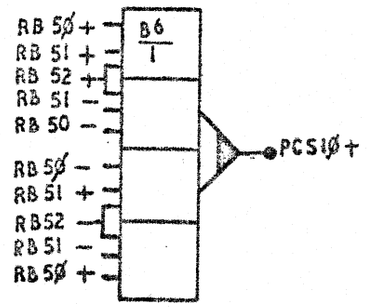

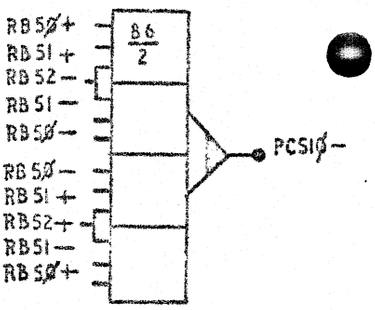

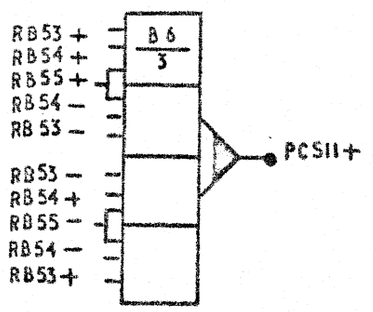

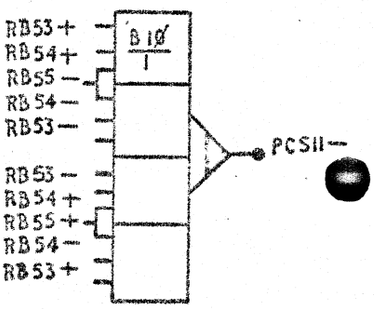

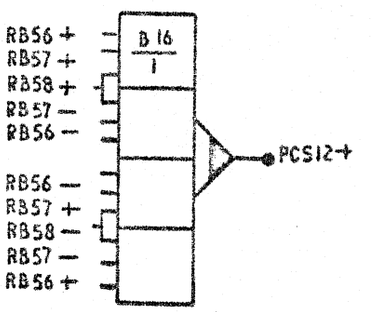

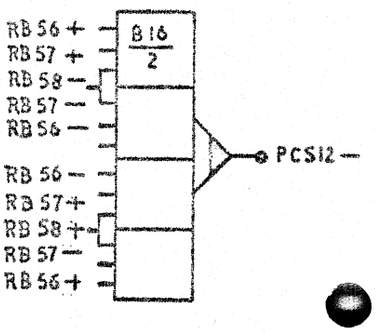

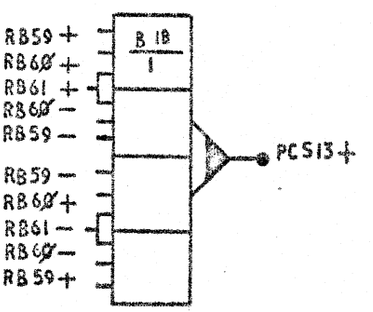

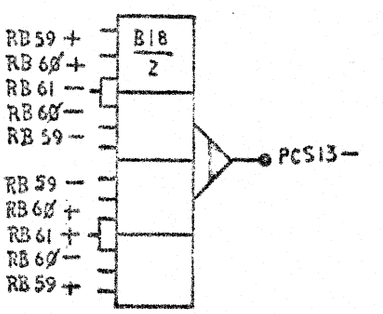

PARITY BIT GENERATION STAGE 1

WGC Ø2/26

SUB	1SS														
ACW	0827														

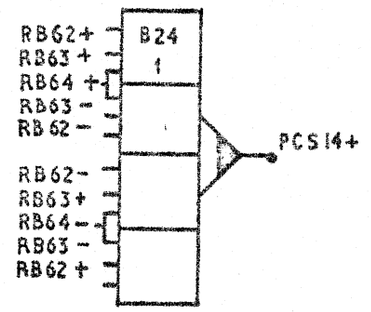

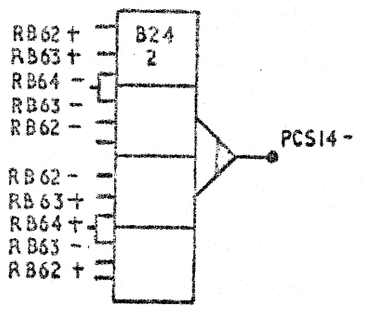

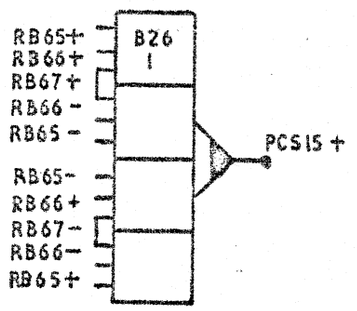

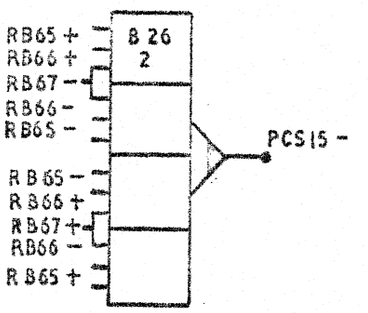

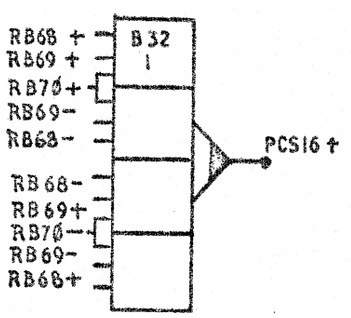

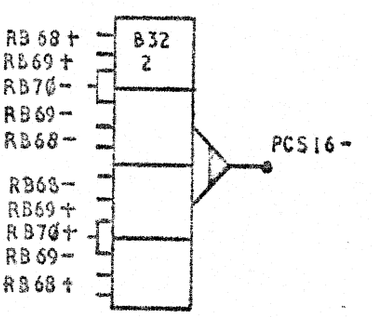

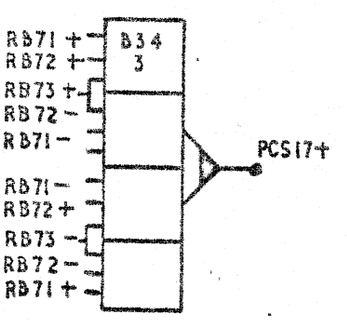

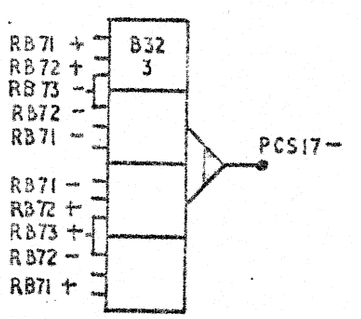

PARITY BIT GENERATION . STAGE 1

WGC02/31

SUB.	1SS													
A.C.W.	0327													

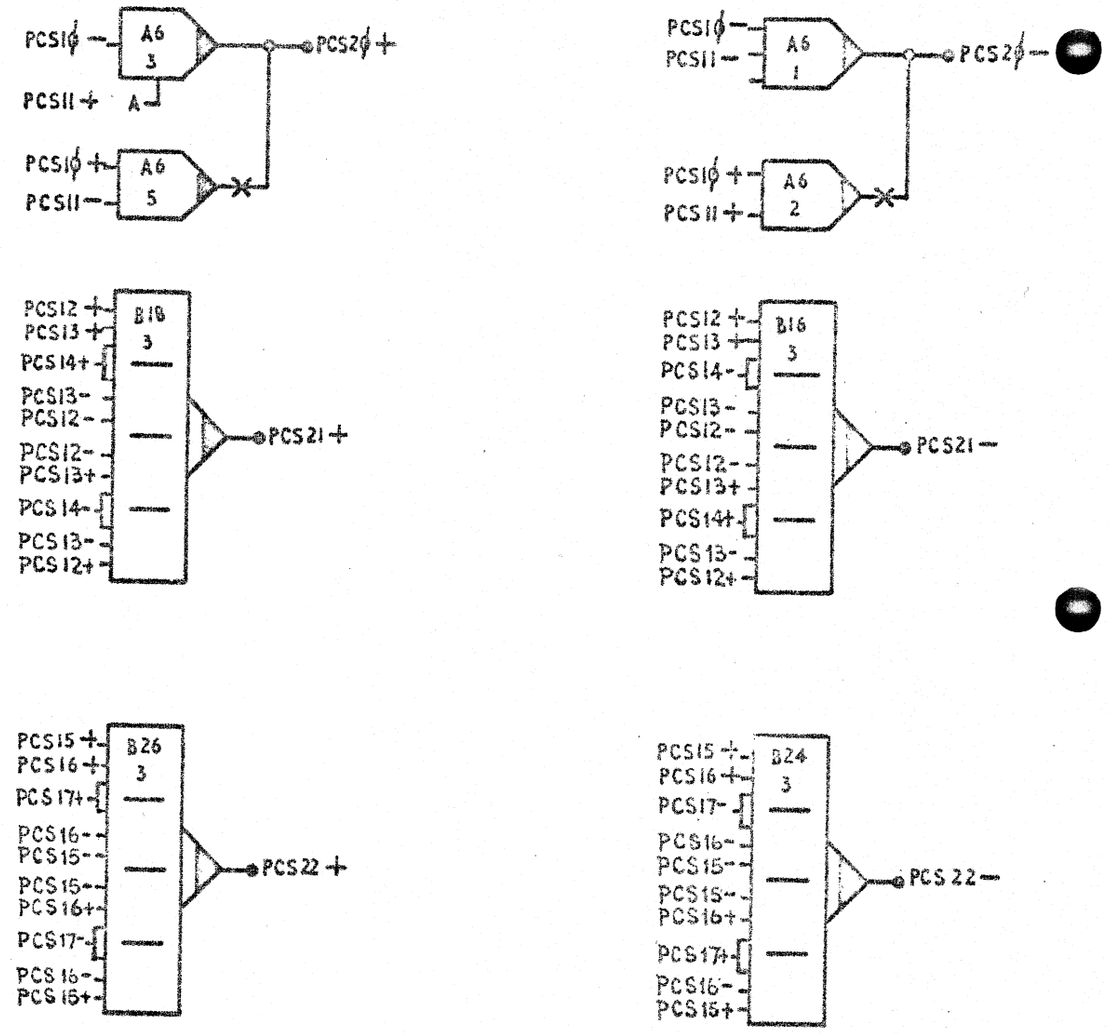

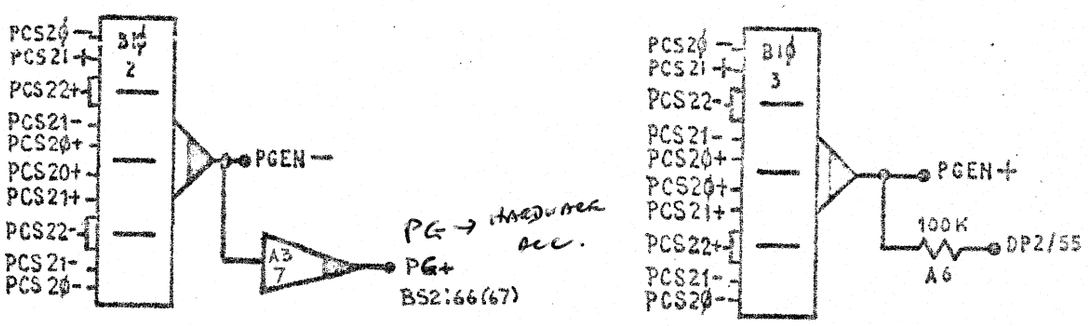

ARITY BIT GENERATION STAGES 2 & 3

WGCØ2/32

UB.	ISS	1														
C.W.	0827	0852														

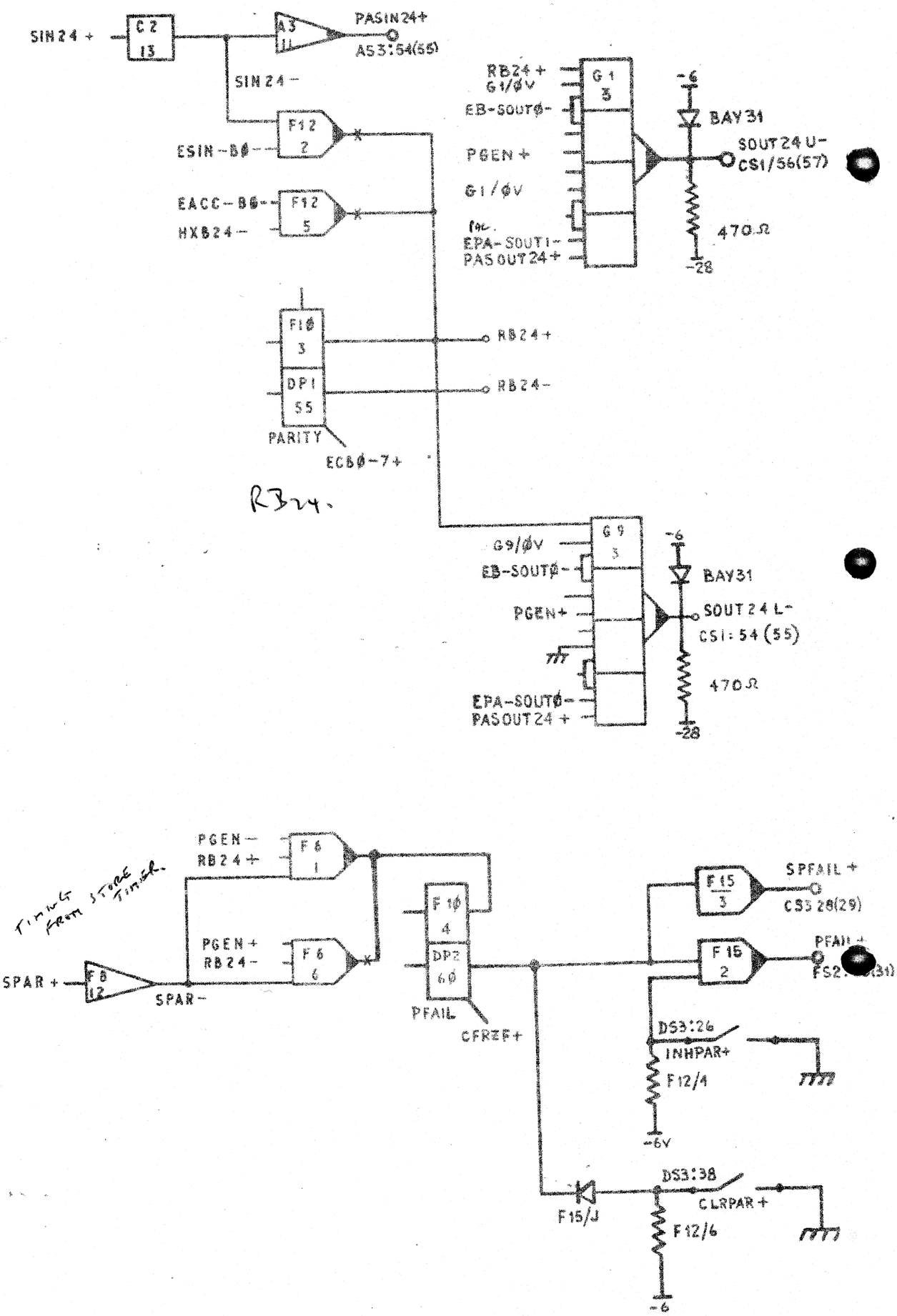

RITY FAIL, RB24 & GATES

WGC 02/33

JB	ISS	1	2	3	4										
S W	0827	0852	0963	1549	1565										
TE	25/8/67	18/9/67	12/3/68	12/8/68	30/9/68										

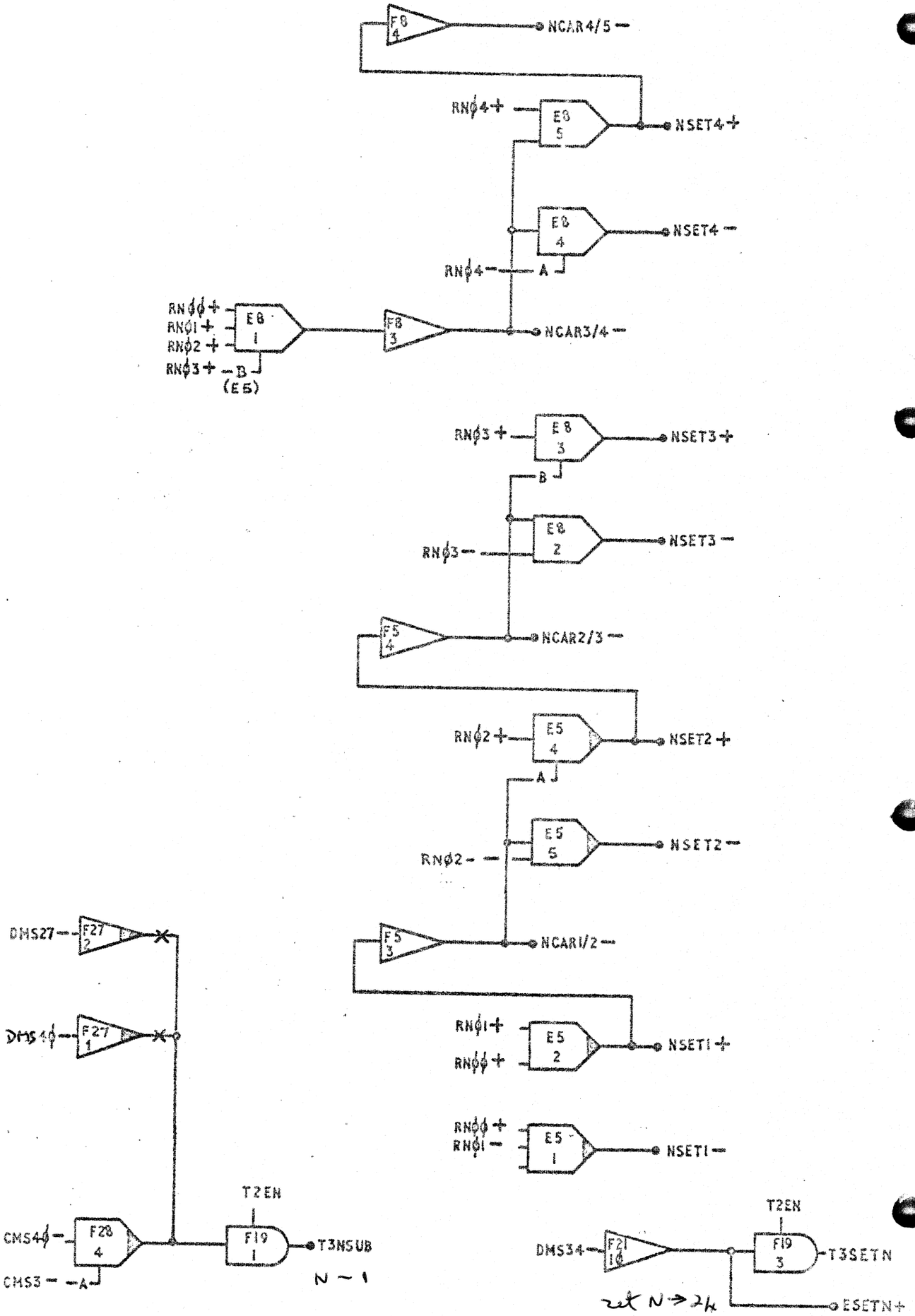

COUNT GATES.

WGCϕ2/34

B.	ISS	1	2												
C.W.	0827	0885	0924												

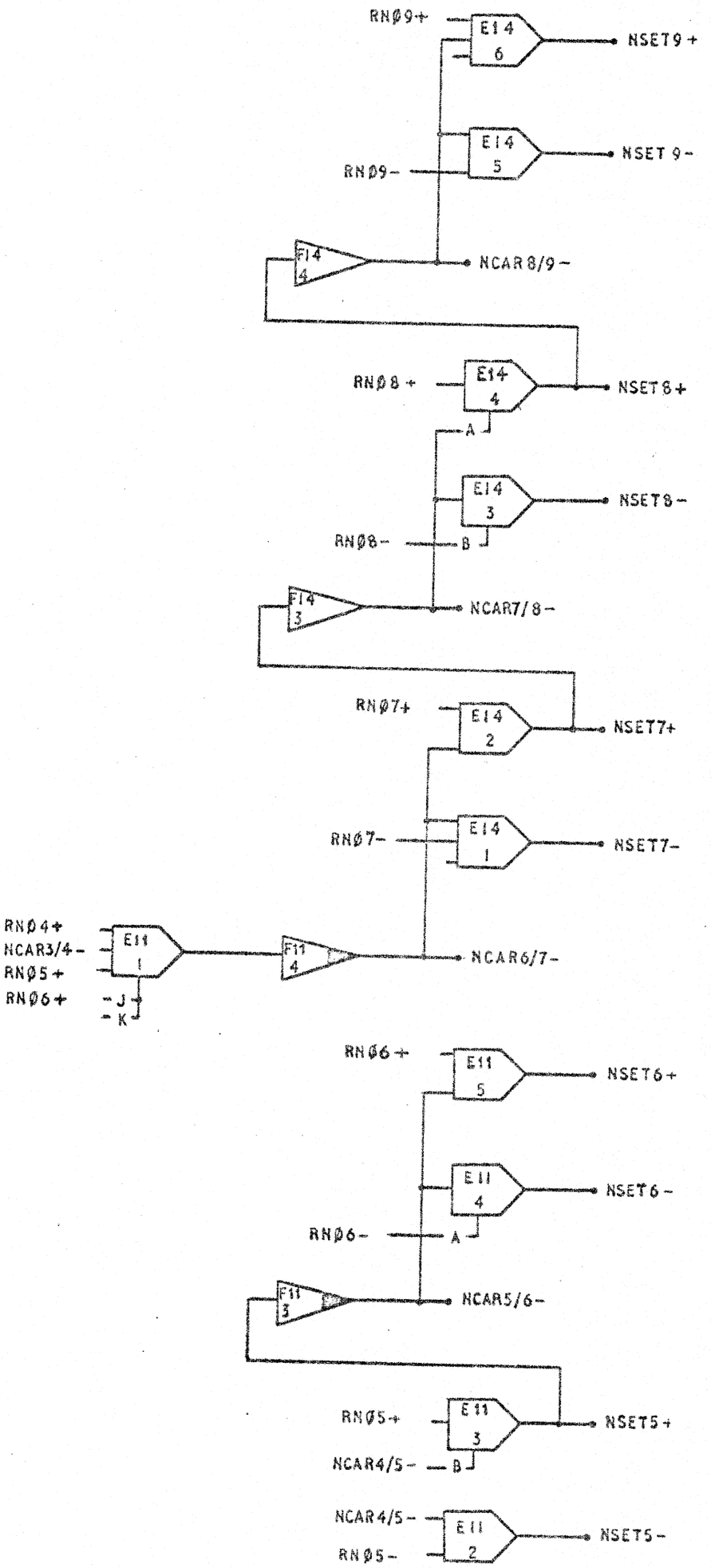

COUNT GATES

WGCØ2/35

UB	1SS														
CW	0827														

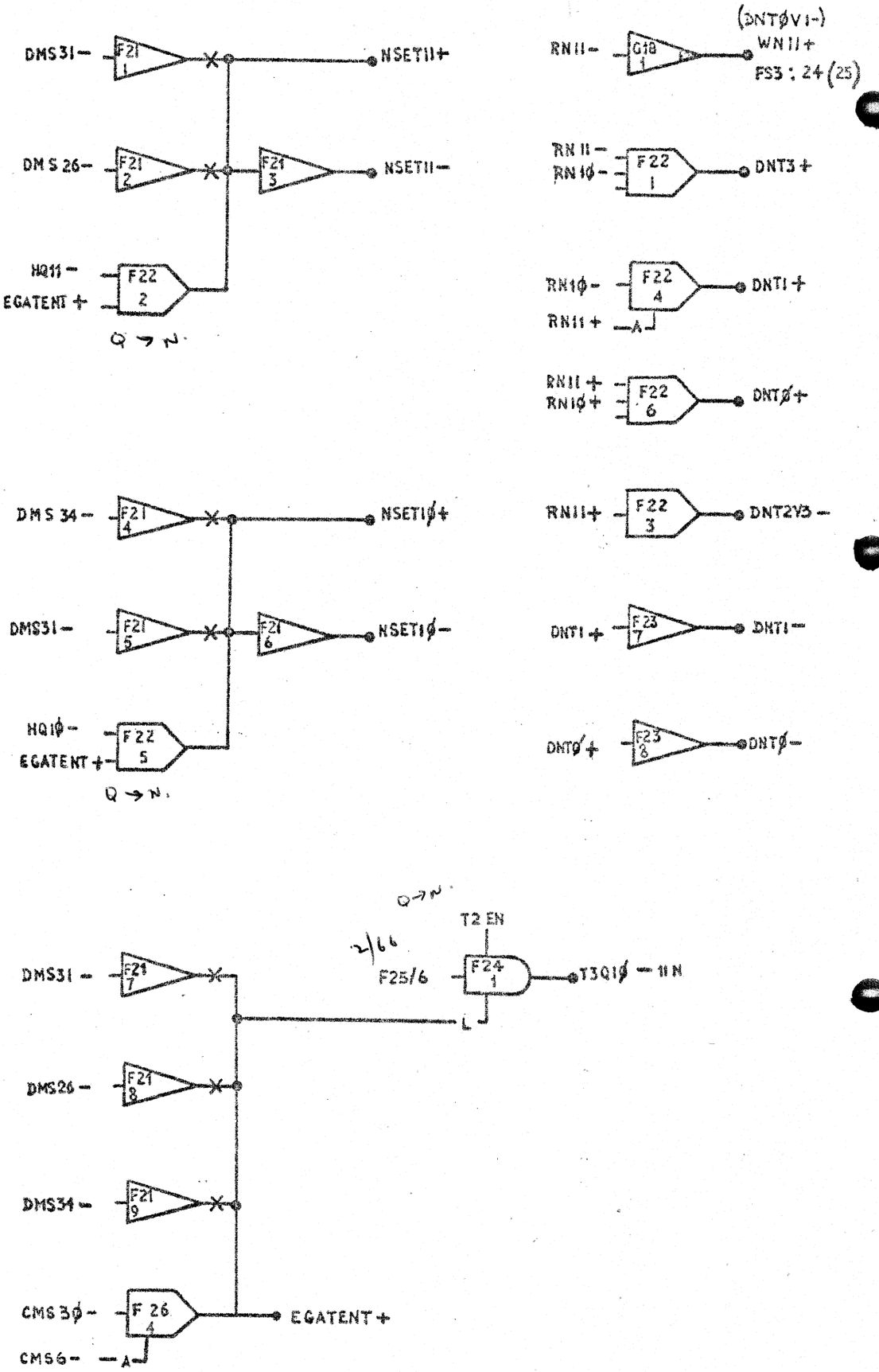

N REGISTER GATES (N&)

WGC Ø2/36

SUB	1SS															
ACW	0827															

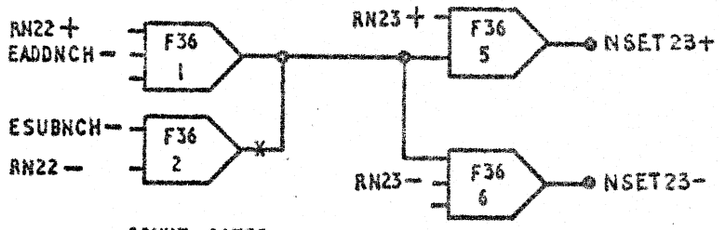

COUNT GATES.

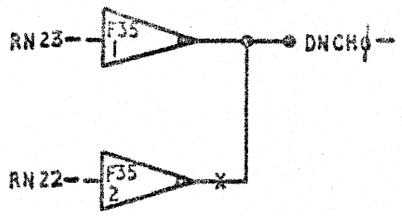

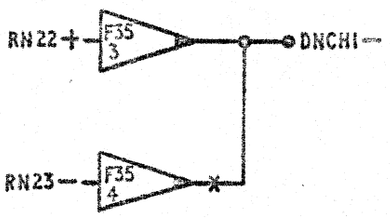

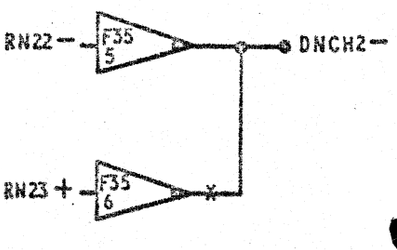

During prep for order
WMOD set N22 & N23 → 1.

$\overline{DM6}$ = mod rec

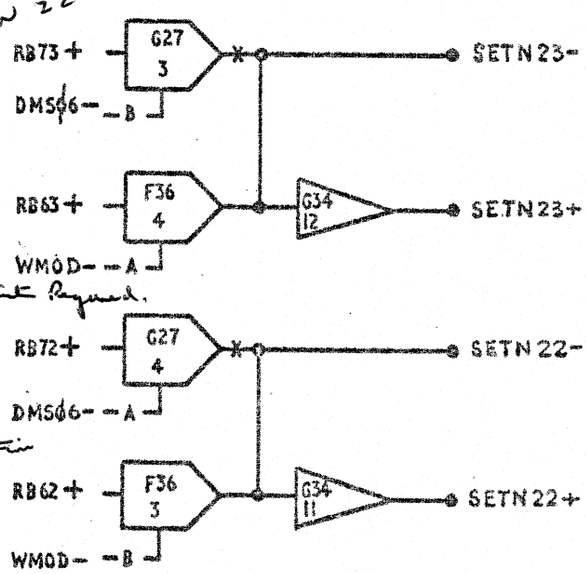

Modifier Required.

During modification Bent.

MODIFIER TO RCH GATES.

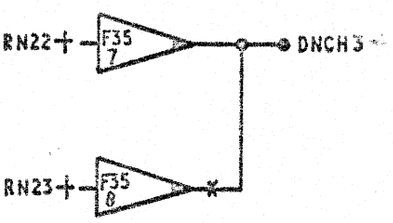

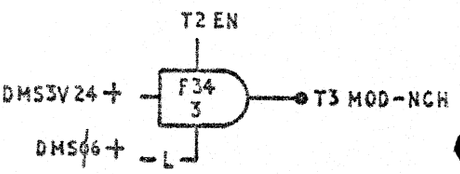

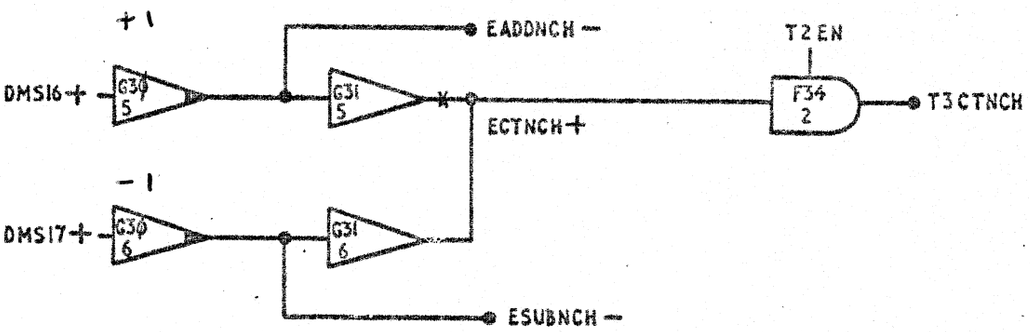

CHARACTER REGISTER GATES & DECODE. WGC02/37

JB	1SS														
C.W.	0827														

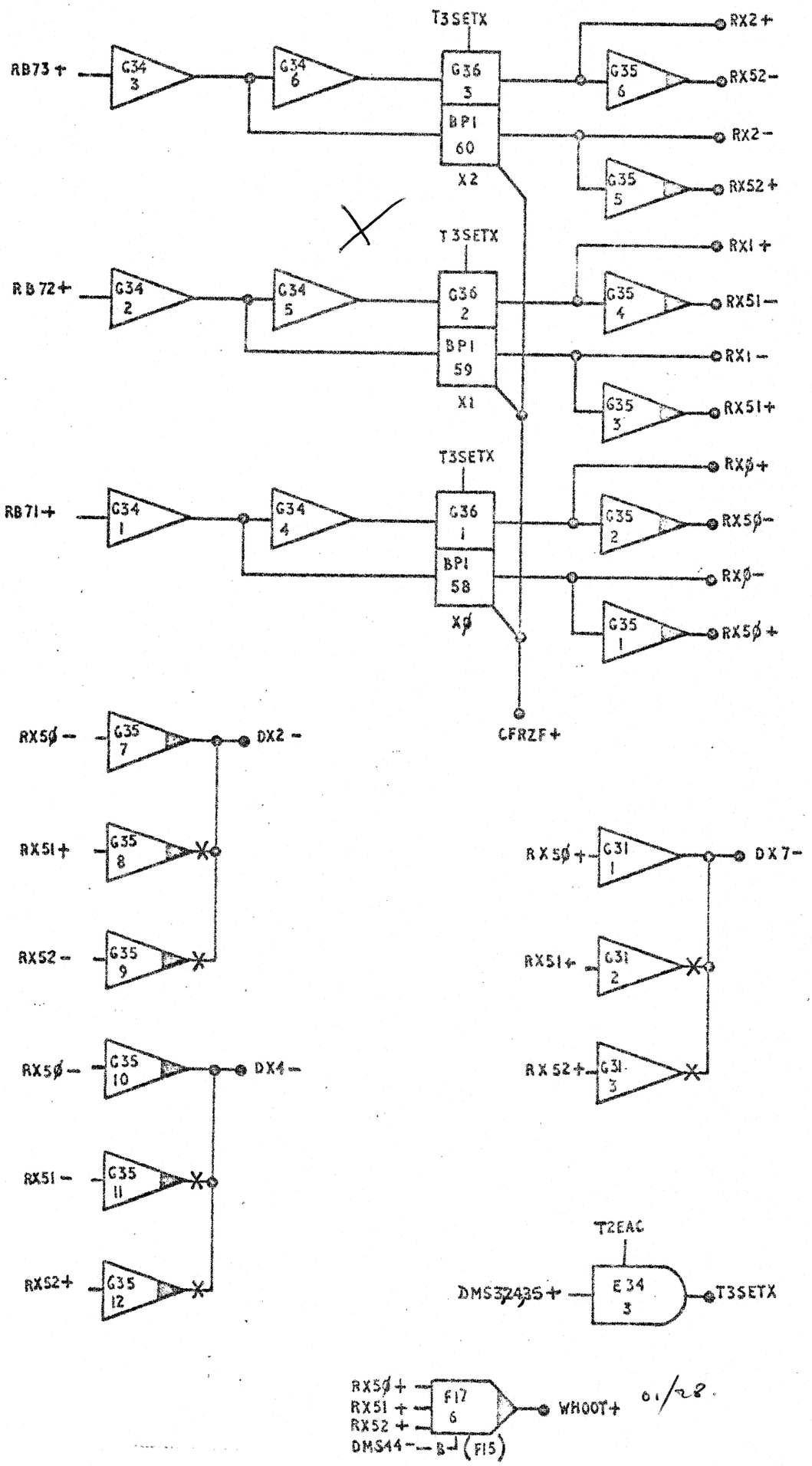

X REGISTER GATES & DECODE

WGCØ2 / 38

SUB	ISS														
ACW	0827														

DATUM.

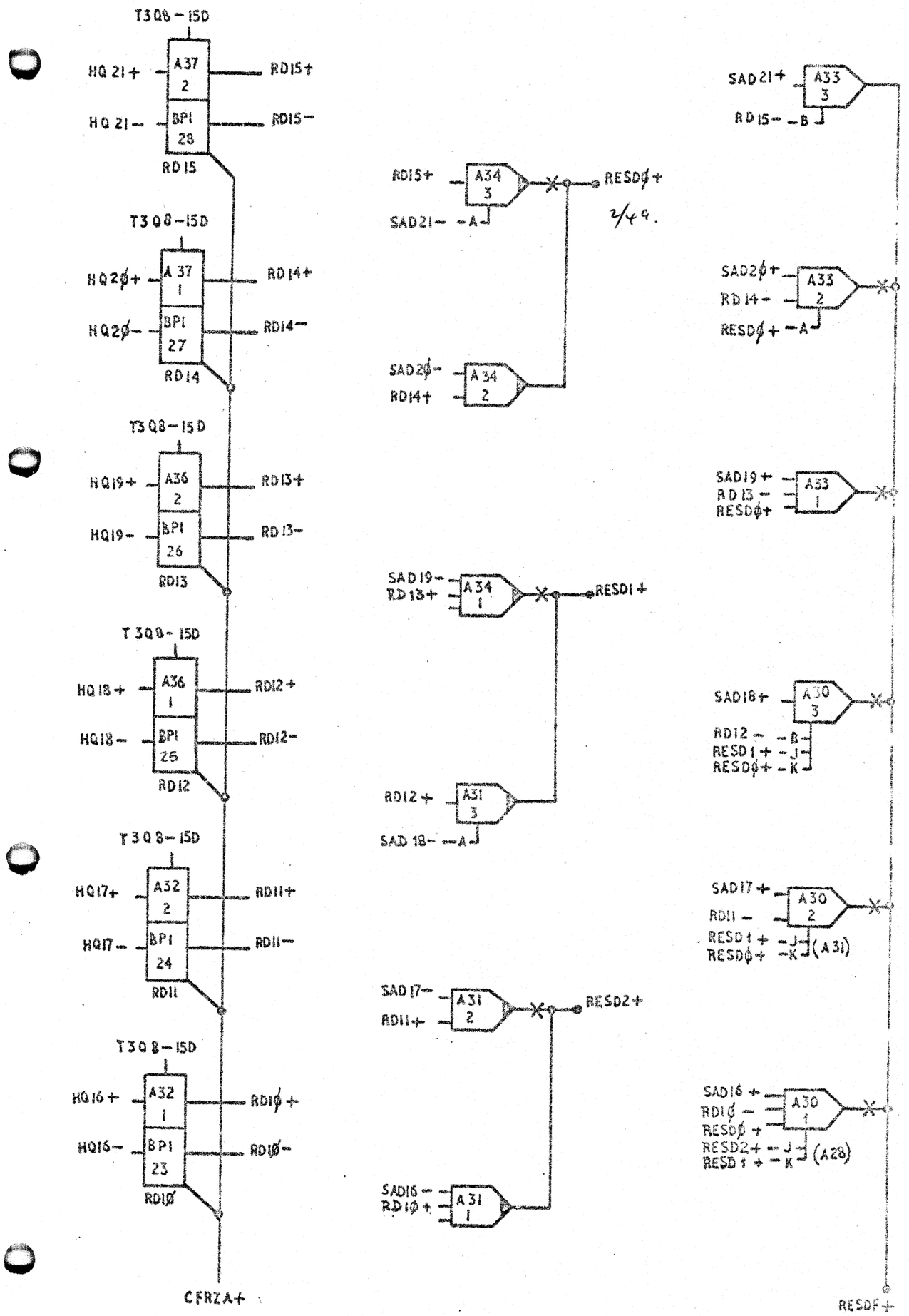

DATUM REGISTER & RESERVATION CHECK

WGC 02/30

SUB	ISS
ACW	0827

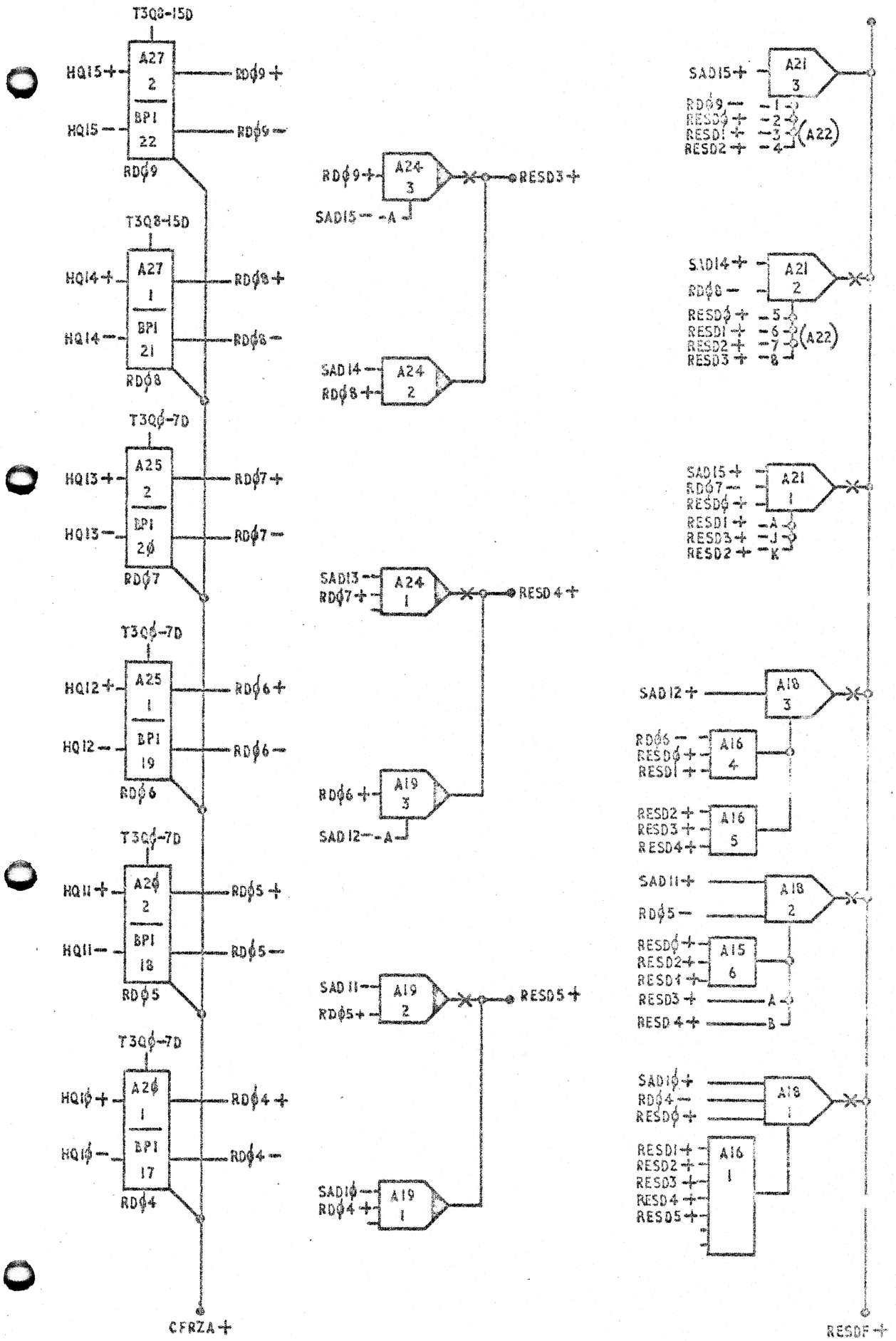

DATUM REGISTER & RESERVATION CHECK. WGCϕ2/4ϕ

SUB.	1SS														
A.C.W.	0827														

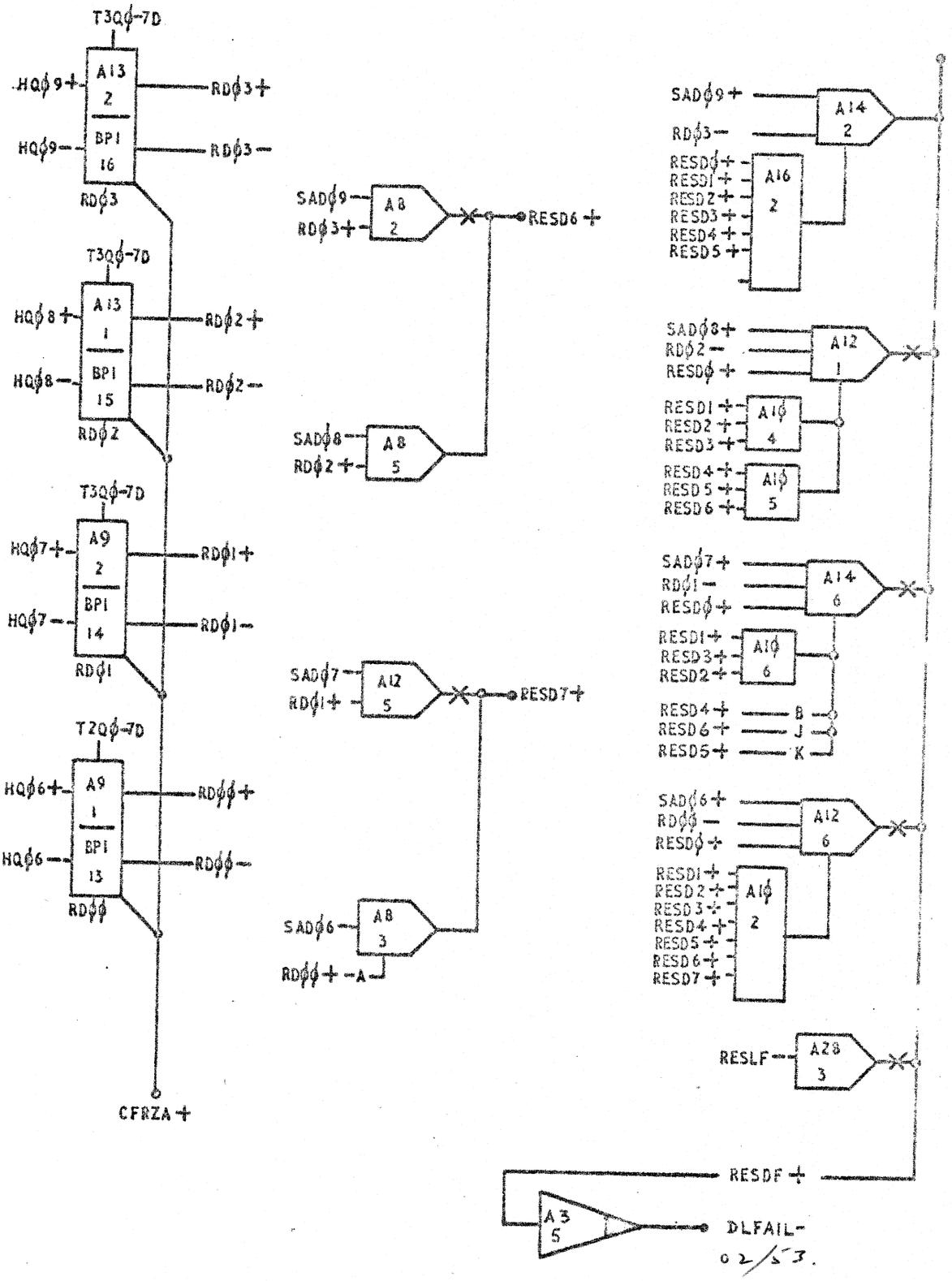

ATUM REGISTER & RESERVATION CHECK.

WGCϕ2/41

UB.	ISS	1													
C.W.	0827	0352													

LIMIT.

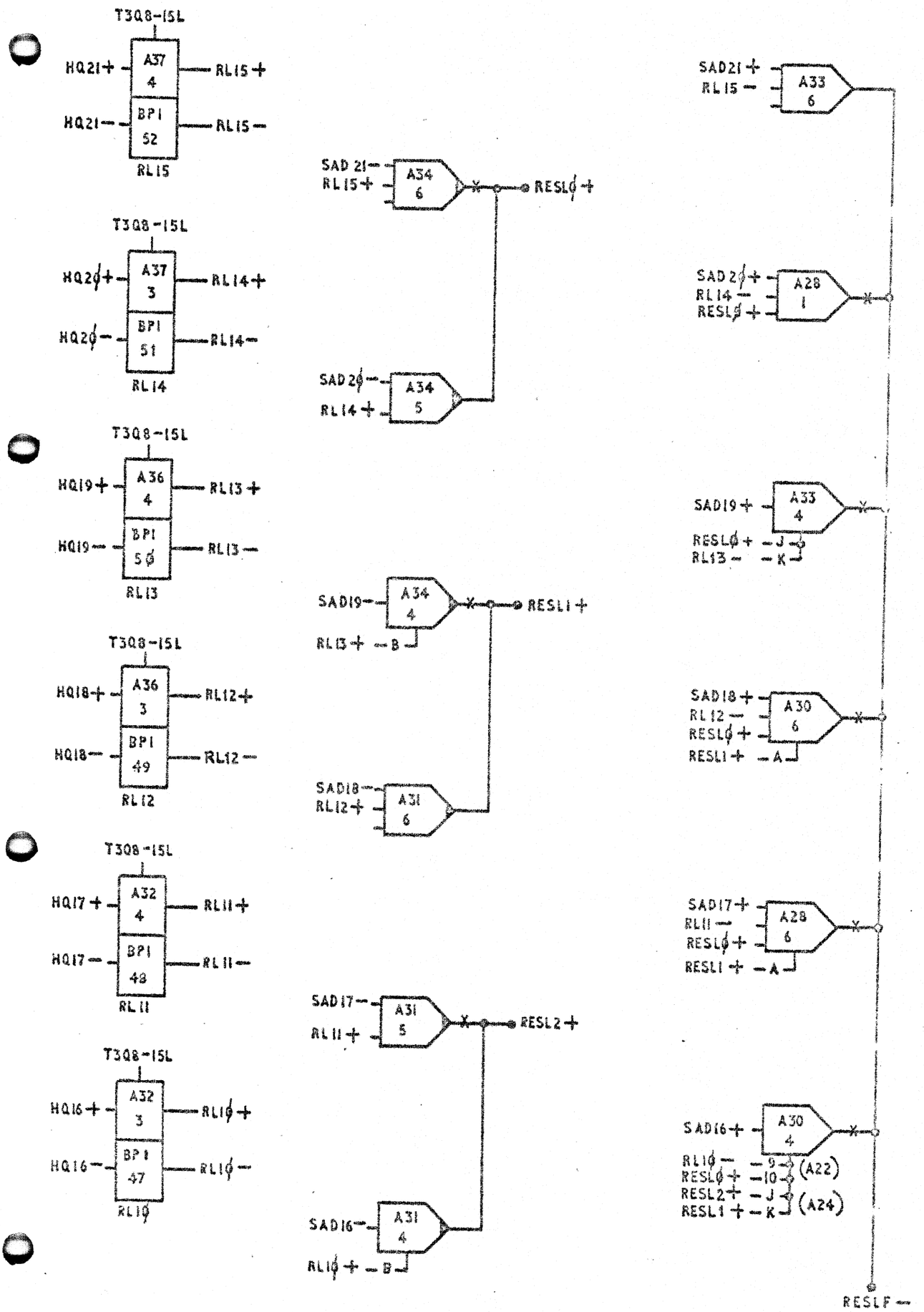

MIT REGISTER & RESERVATION CHECK.

WGC02/42

JB.	155															
C.W.	0327															

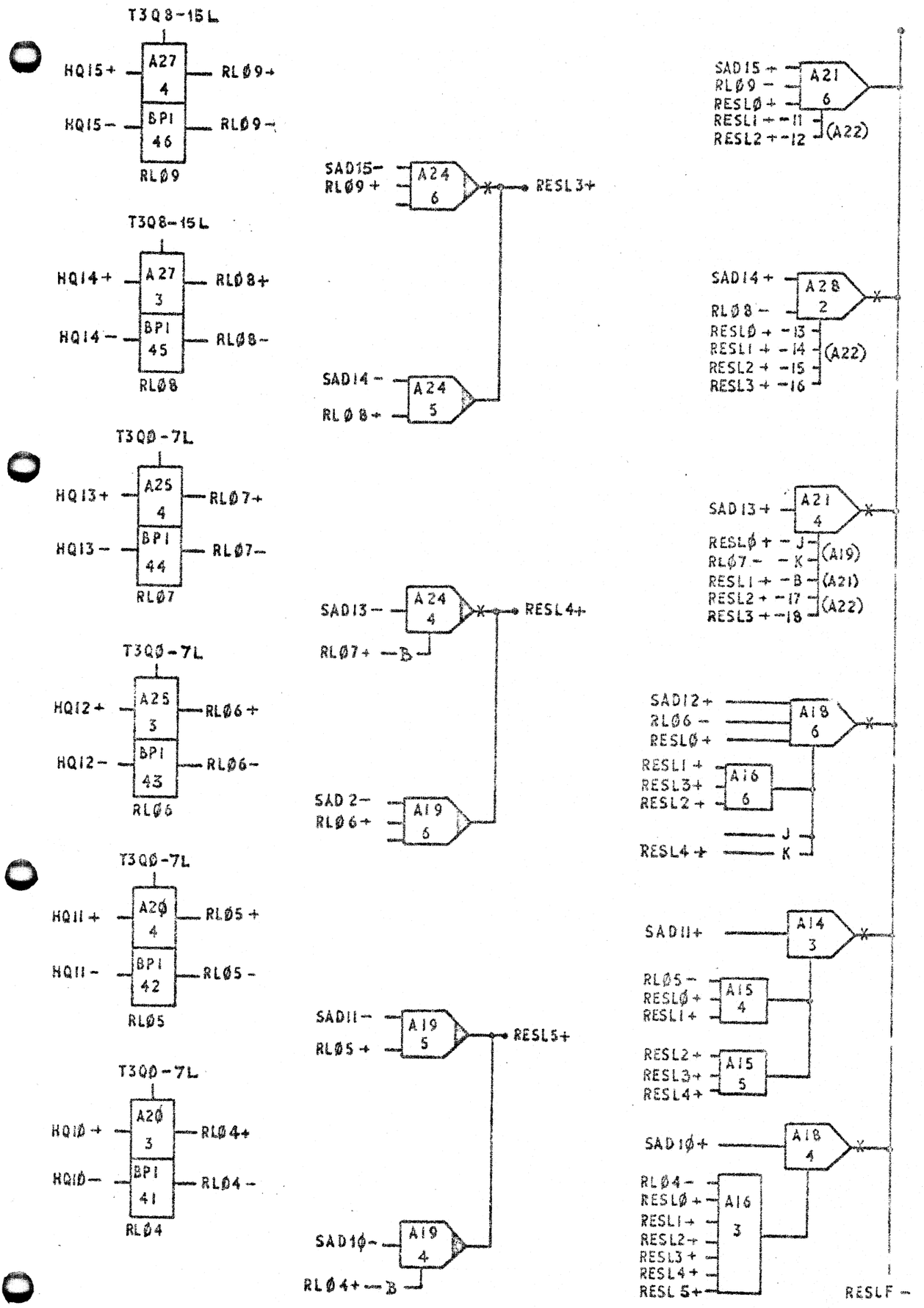

LIMIT REGISTER & RESERVATION CHECK

WGCØ2/43

SUB	ISS														
CW	0027														

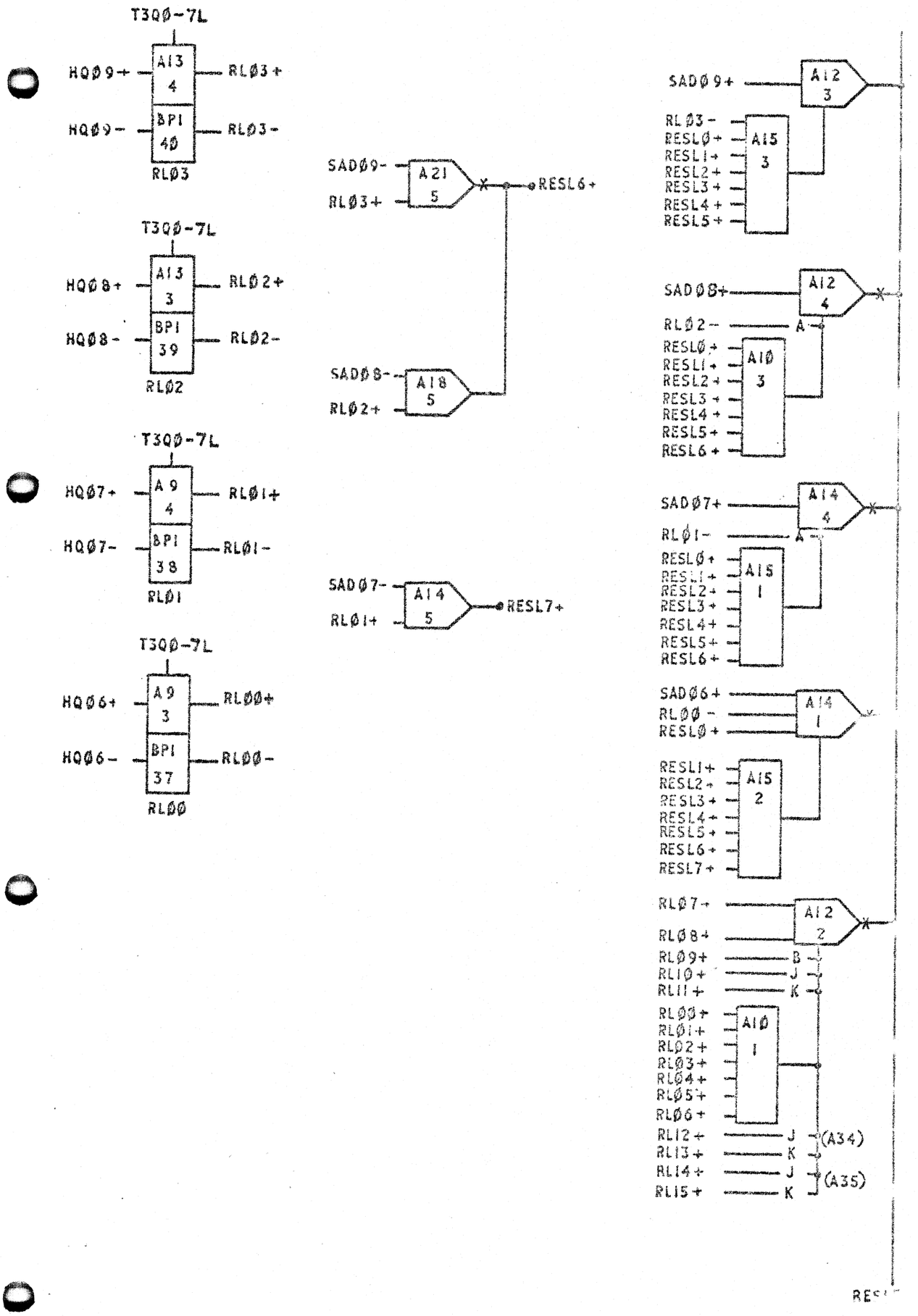

LIMIT REGISTER & RESERVATION CHECK

WGCØ2/44

SUB	1SS														
CW	0827														

G REGISTER

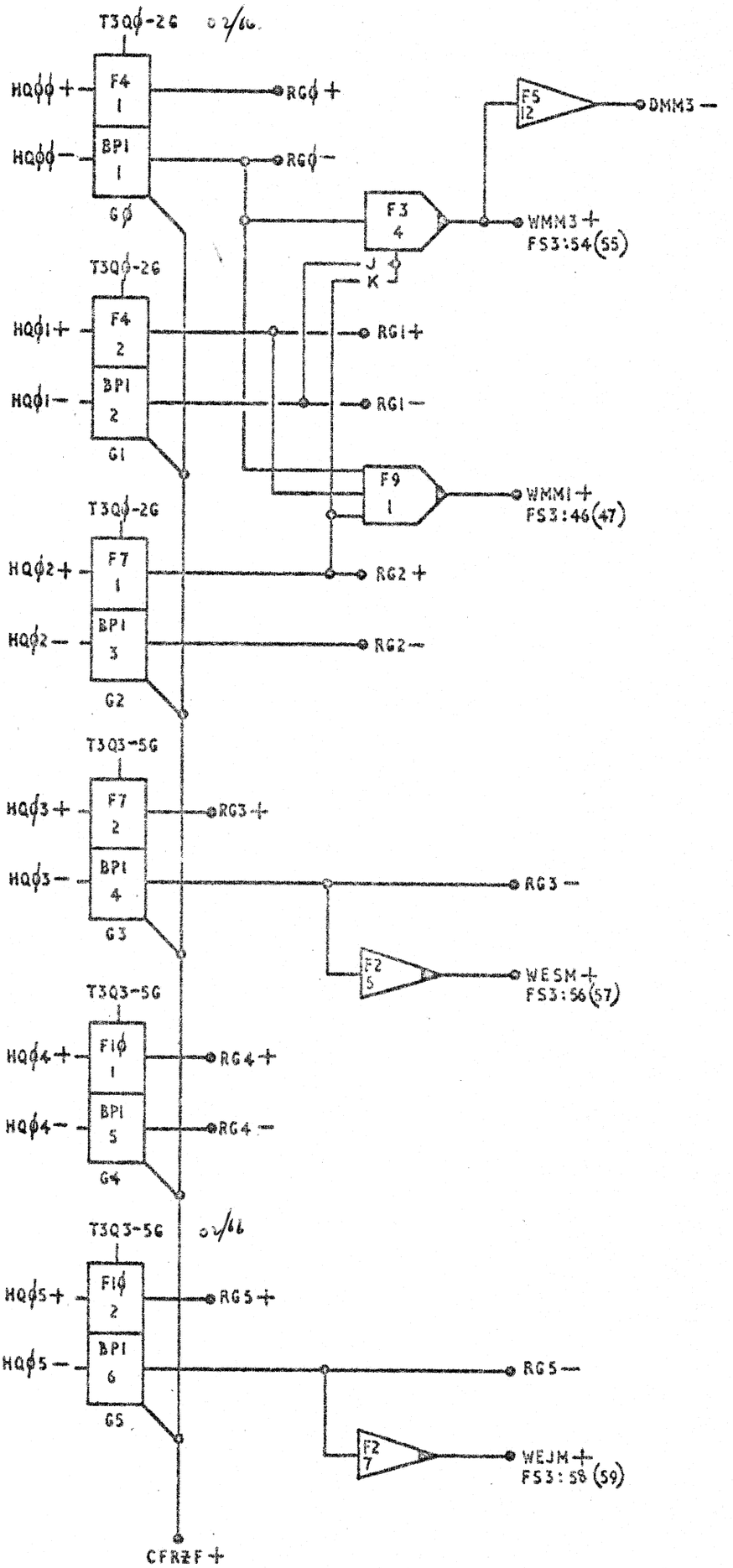

G

REGISTER BITS ϕ-5.

WGCϕ2/45

SUB.	1SS														
A.C.W.	0827														

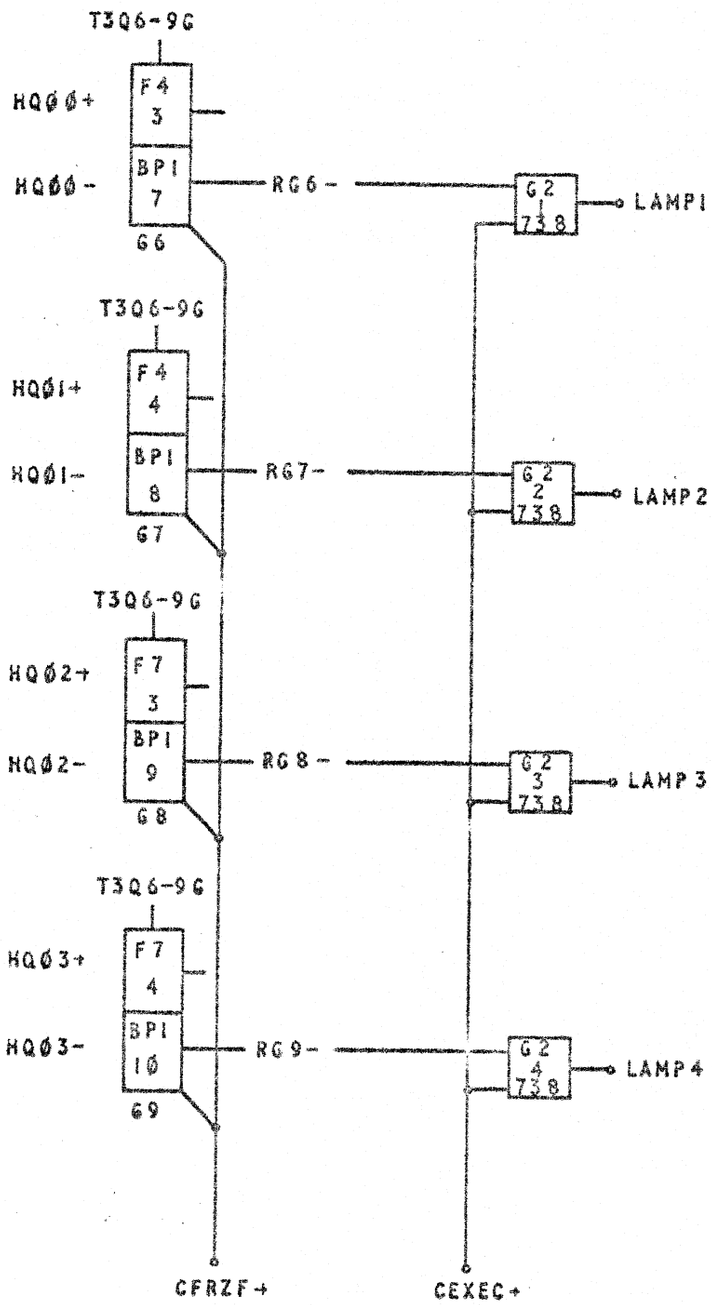

REGISTER BITS 6-9

WGCØ2/46

UB	ISS													
CW	0327													

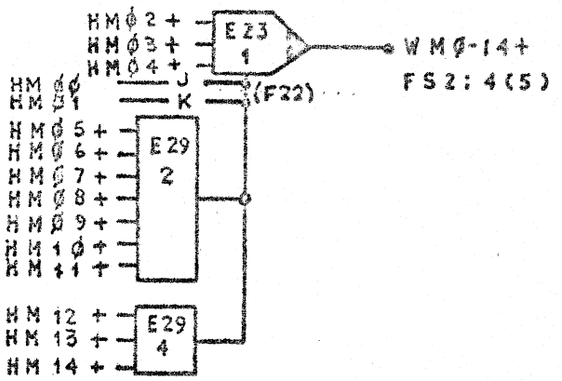
HMØ2 +
HMØ3 +
HMØ4 +
E23
1
WMØ-14+
FS2:4(5)
HMØØ
HMØ1
J
K
(F22)
HMØ5 +
HMØ6 +
HMØ7 +
HMØ8 +
HMØ9 +
HM1Ø +
HM11 +
E29
2
HM 12 +
HM 13 +
HM 14 +
E29
4

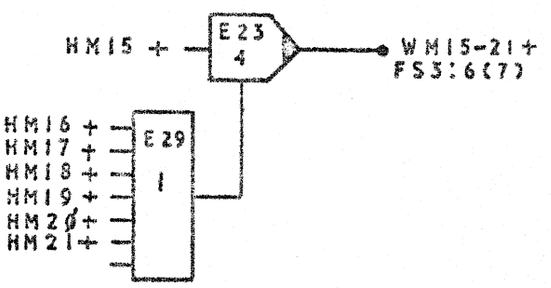
HM15 +
E23
4
WM15-21+
FS3:6(7)
HM16 +
HM17 +
HM18 +
HM19 +
HM2Ø+
HM21+
E29
1

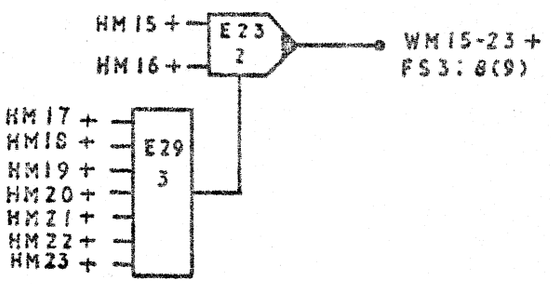
HM15 +
HM16 +
E23
2
WM15-23 +
FS3:8(9)
HM17 +
HM18 +
HM19 +
HM20 +
HM21 +
HM22 +
HM23 +
E29
3

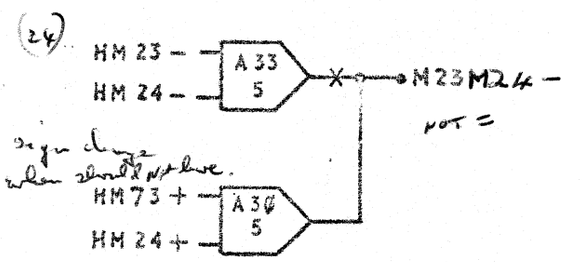
(24)
HM 23 –
HM 24 –
A33
5
M23M24 –
not =
Sign change
when should not be.
HM73 +
HM 24 +
A3Ø
5

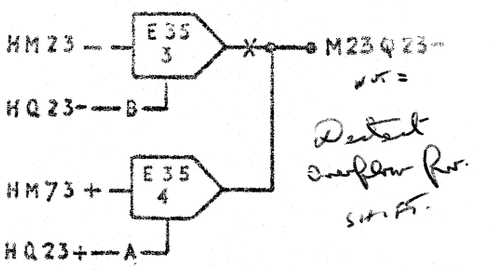
HM23 –
E35
3
M23Q23 –
not =
HQ23 – B
Detect
overflow for
sign Ff.
HM73 +
E35
4
HQ23 + A

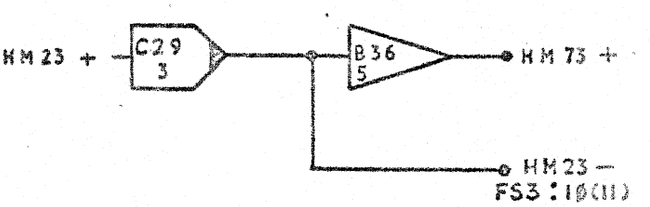
HM 23 +
C29
3
B36
5
HM 73 +
HM23 –
FS3:1Ø(11)

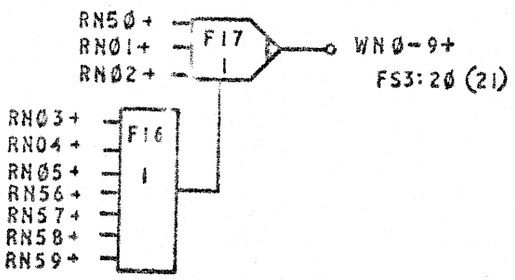
RN5Ø+
RNØ1+
RNØ2+
F17
1
WNØ-9+
FS3:2Ø (21)
RNØ3+
RNØ4+
RNØ5+
RN56+
RN57+
RN58+
RN59+
F16
1

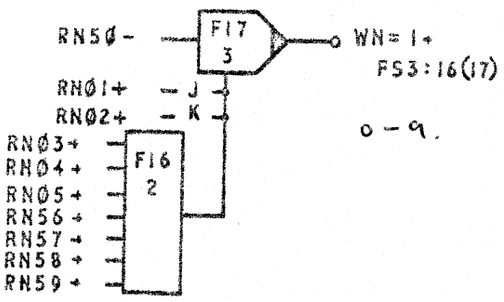
RN5Ø-
F17
3
WN=1+
FS3:16(17)
RNØ1+
J
RNØ2+
K
0-9.
RNØ3+
RNØ4+
RNØ5+
RN56+
RN57+
RN58+
RN59+
F16
2

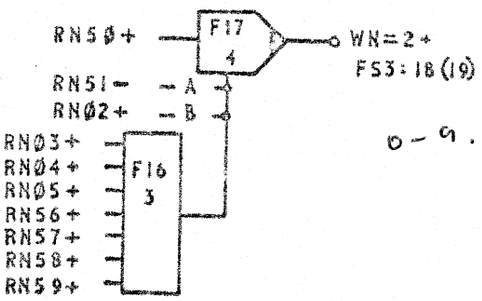
RN5Ø+
F17
4
WN=2+
FS3:18(19)
RN51-
A
RNØ2+
B
0-9.
RNØ3+
RNØ4+
RNØ5+
RN56+
RN57+
RN58+
RN59+
F16
3

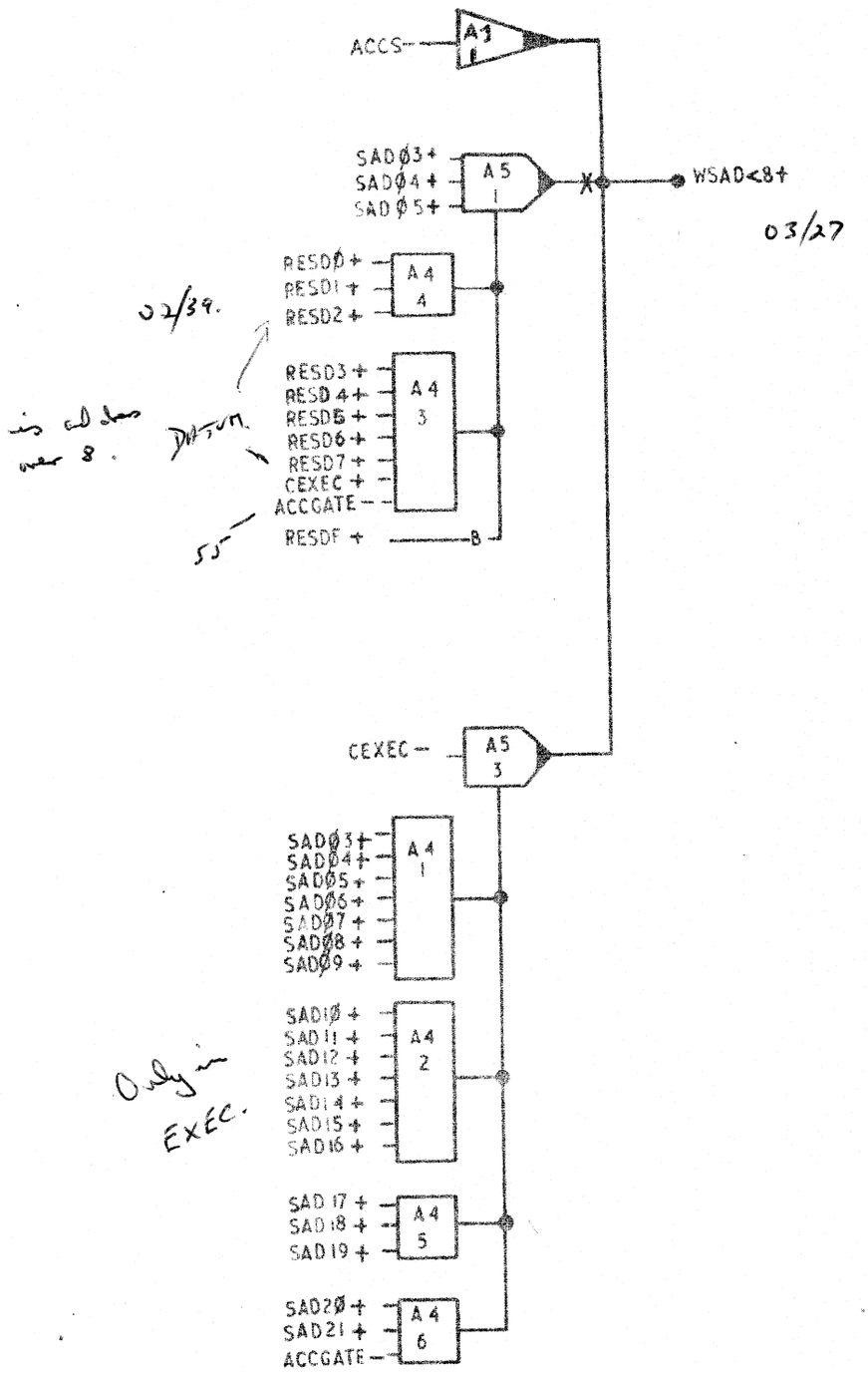

ISS	1	2
0827	0852	0963

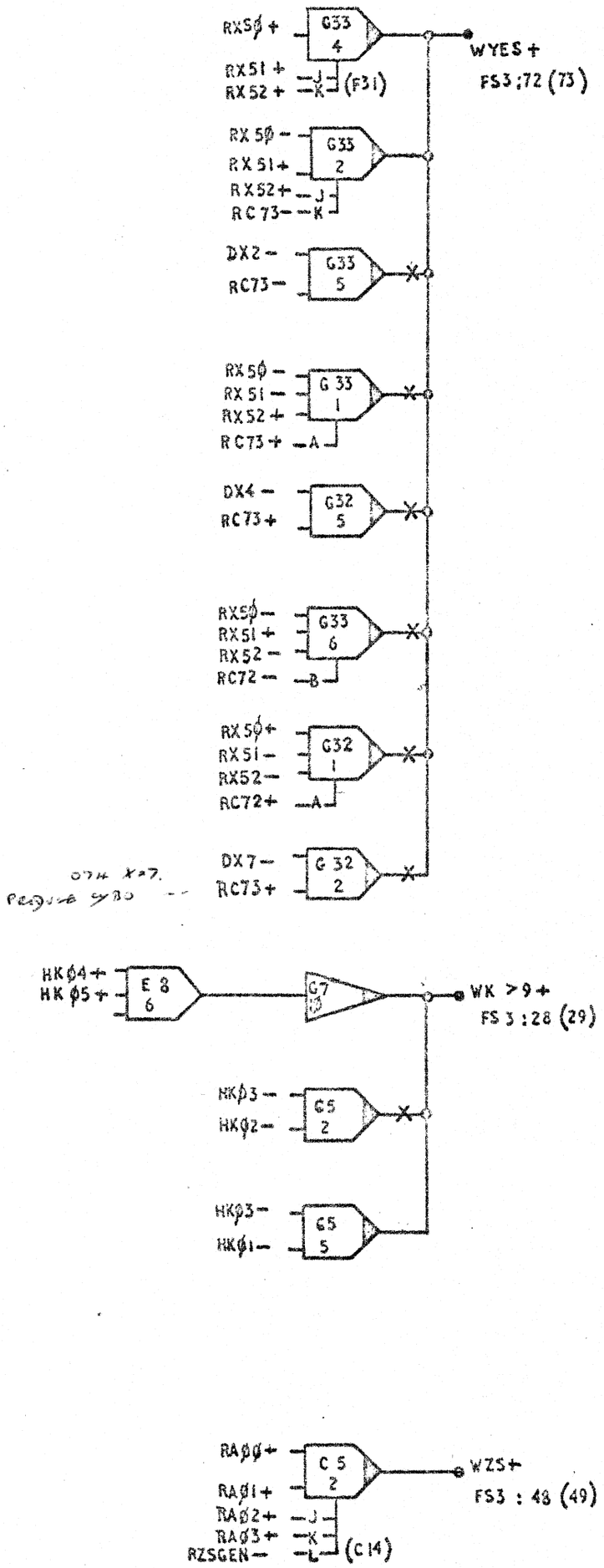
RX5Ø +
G33 4
RX51 +
RX52 +
J
K
(F31)
WYES +
FS3 ;72 (73)
RX 5Ø –
RX 51 +
RX52 +
RC 73 –
G33 2
J
K
DX2 –
RC73 –
G33 5
RX5Ø –
RX 51 –
RX52 +
RC73 +
G 33 1
A
DX4 –
RC73 +
G32 5
RX5Ø –
RX51 +
RX52 –
RC72 –
G33 6
B
RX5Ø +
RX51 –
RX52 –
RC72 +
G32 1
A
DX7 –
RC73 +
G 32 2
HKØ4 +
HKØ5 +
E 8 6
G7 13
WK >9 +
FS 3 :28 (29)
HKØ3 –
HKØ2 –
G5 2
HKØ3 –
HKØ1 –
G5 5
RAØØ +
RAØ1 +
RAØ2 +
RAØ3 +
RZSGEN –
C 5 2
J
K
L
(C14)
WZS +
FS3 : 48 (49)

H33 & M23 Produce WMA

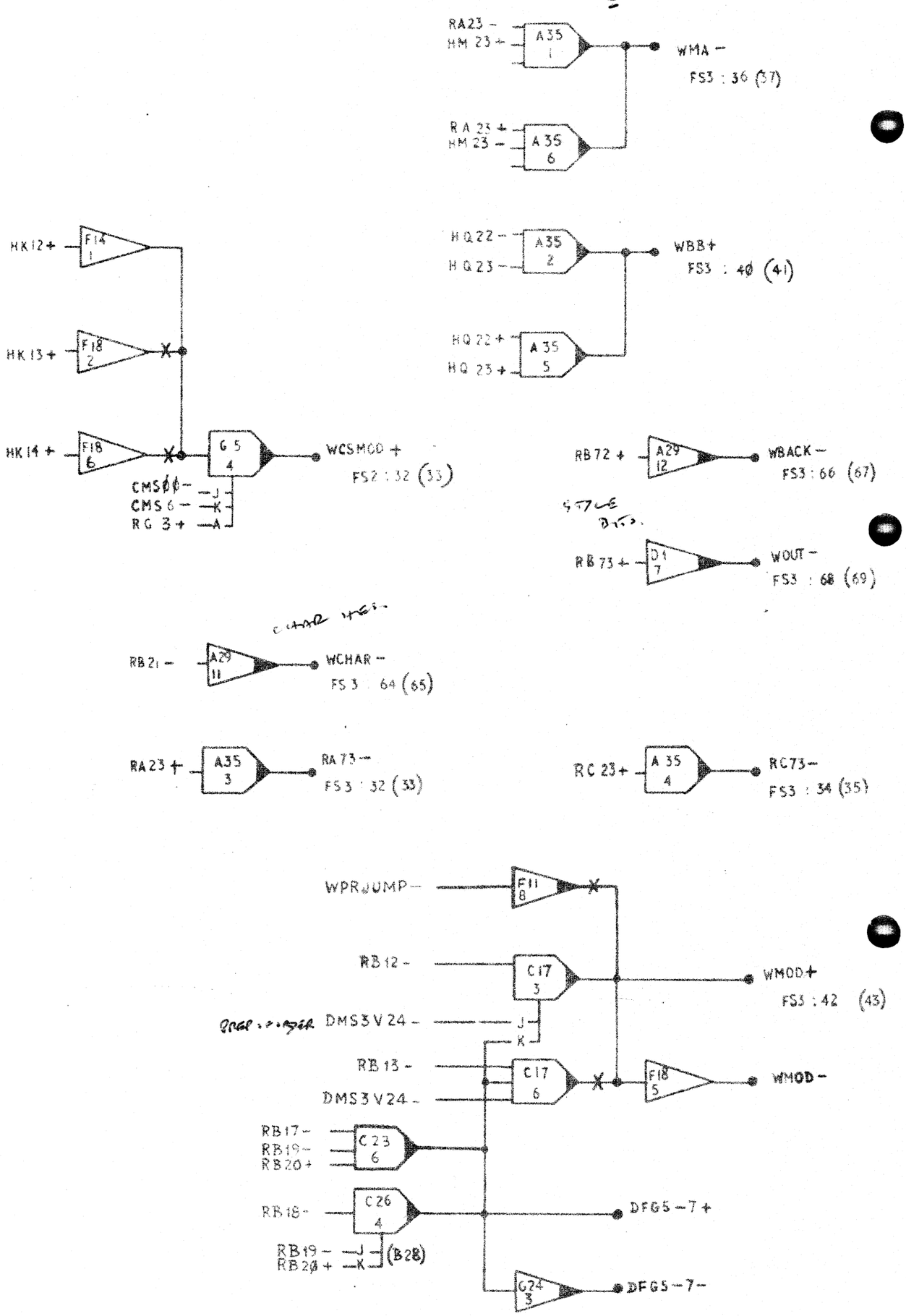

GENERAL TESTS

WGC 02 / 51

SUB	ISS	1	2												
ACW	0827	1555	1565												
DATE	25/8/67	29/8/68	30/9/68												

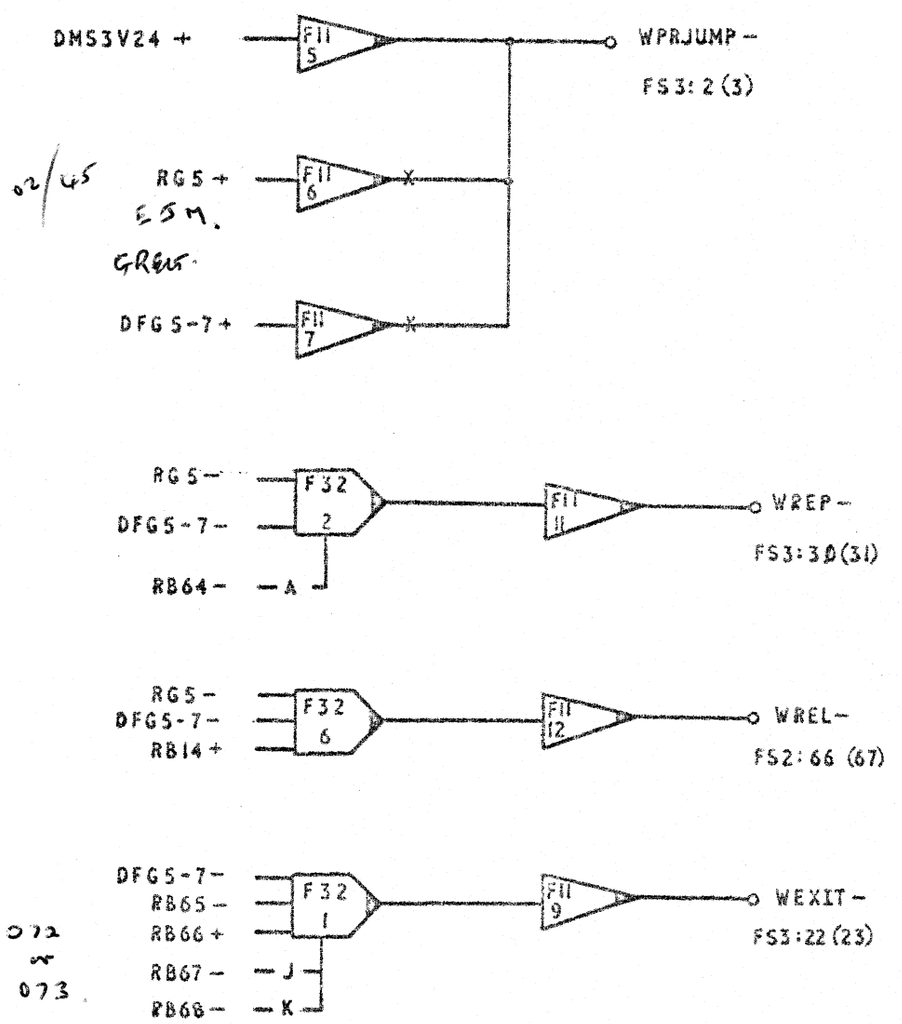
DMS3V24 +
F11 5
WPRJUMP –
FS3: 2 (3)
02/45
RG5 +
F11 6
ESM.
GREEN.
DFG5-7 +
F11 7
RG5 –
DFG5-7 –
RB64 –
A
F32 2
F11 11
WREP –
FS3:30(31)
RG5 –
DFG5-7 –
RB14 +
F32 6
F11 12
WREL –
FS2: 66 (67)
DFG5-7 –
RB65 –
RB66 +
RB67 –
RB68 –
J
K
F32 1
F11 9
WEXIT –
FS3:22 (23)
072
~
073

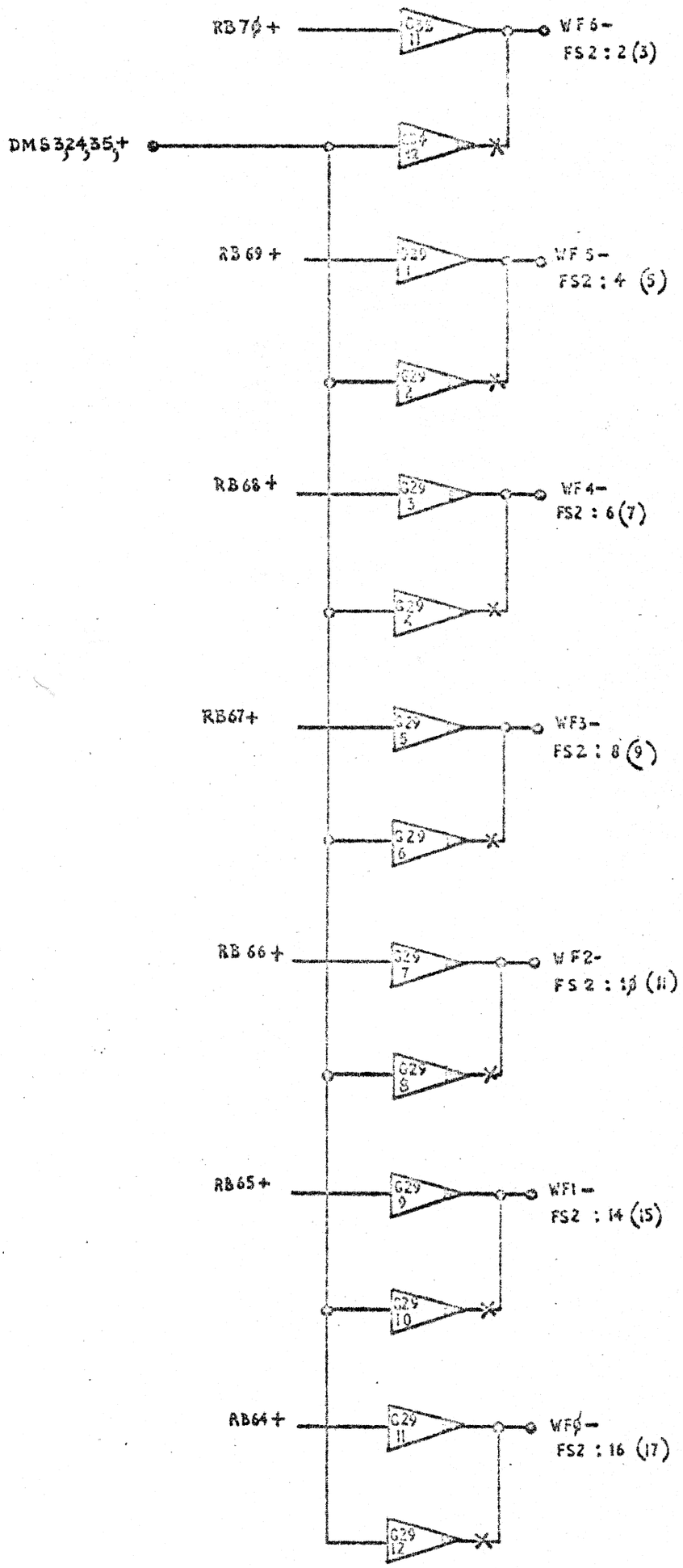

FUNCTION GATES WGCϕ2 / 52

SUB	1SS													
NOW	6627													

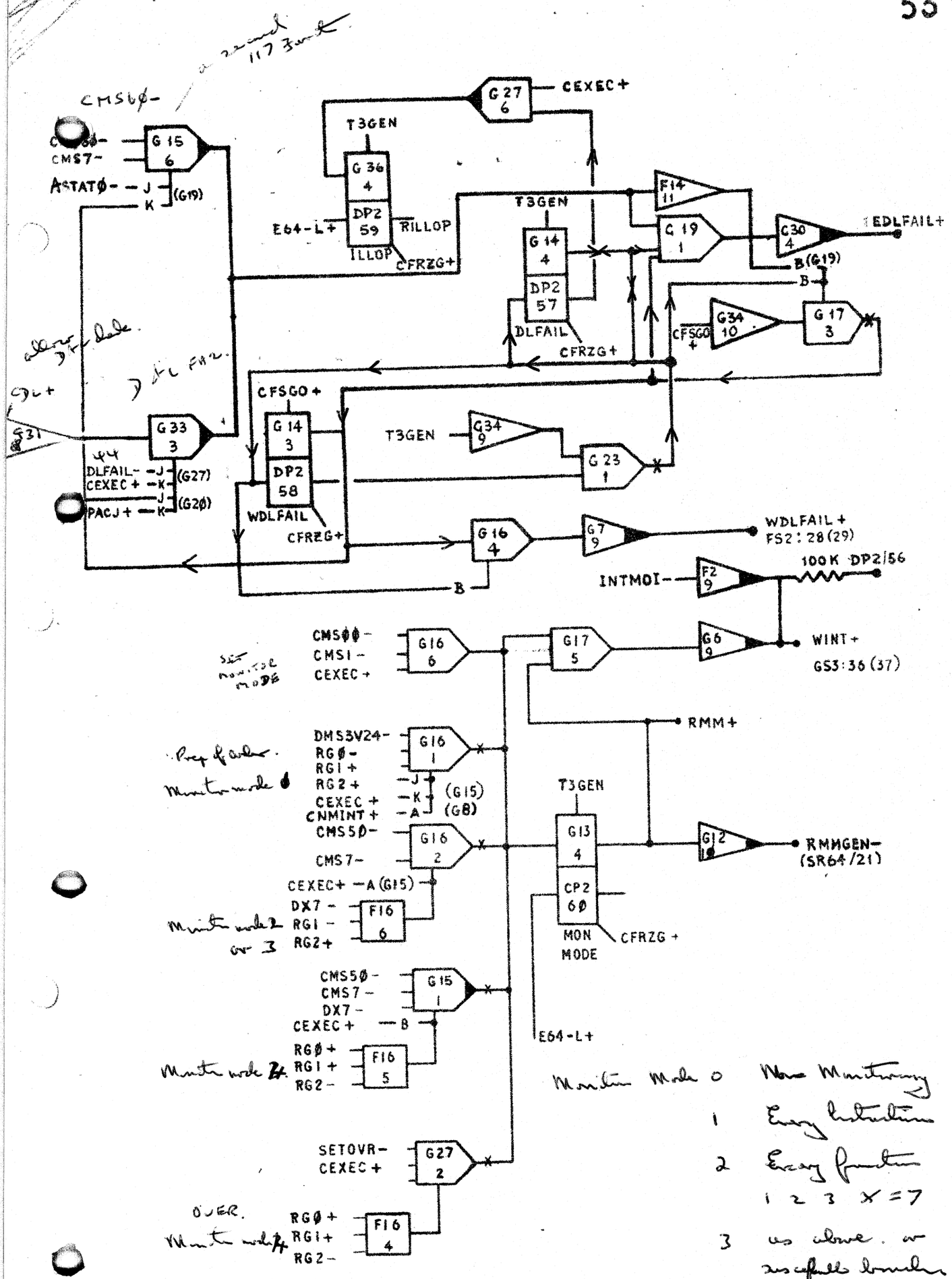

Monitor Mode 0 None Monitoring

1 Every Instruction

2 Every function 1 2 3 X = 7

3 as above. or as after lower instructions

4 Every function 1 2 3 X = 7 or OVR.

ILLEGAL OPERATION & MONITOR MODE STATS

WGC62

SUB	ISS	1	2	3	4	5	6	7							

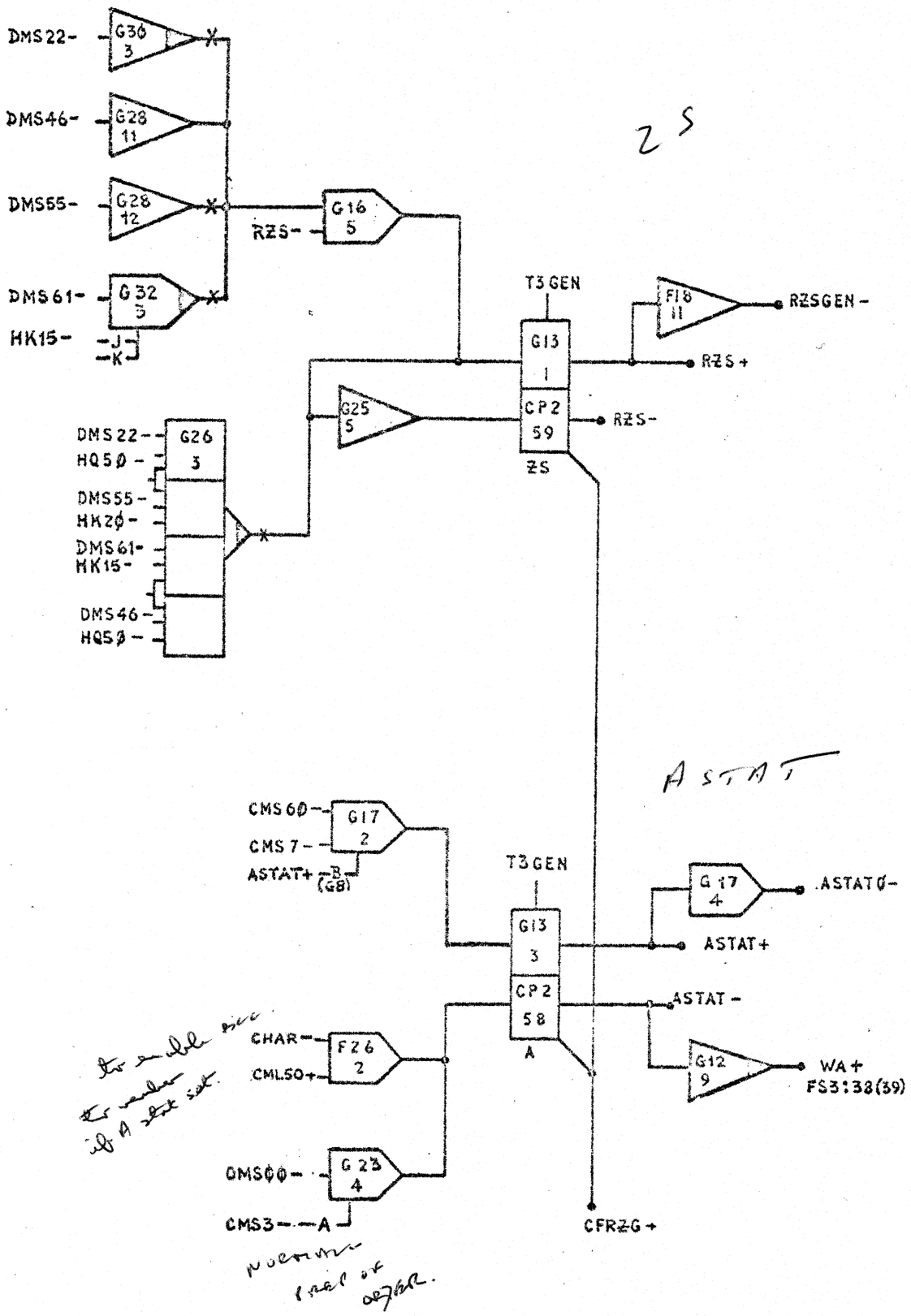

ZS & A STATS

WGCØ2/54

SUB	ISS	1													

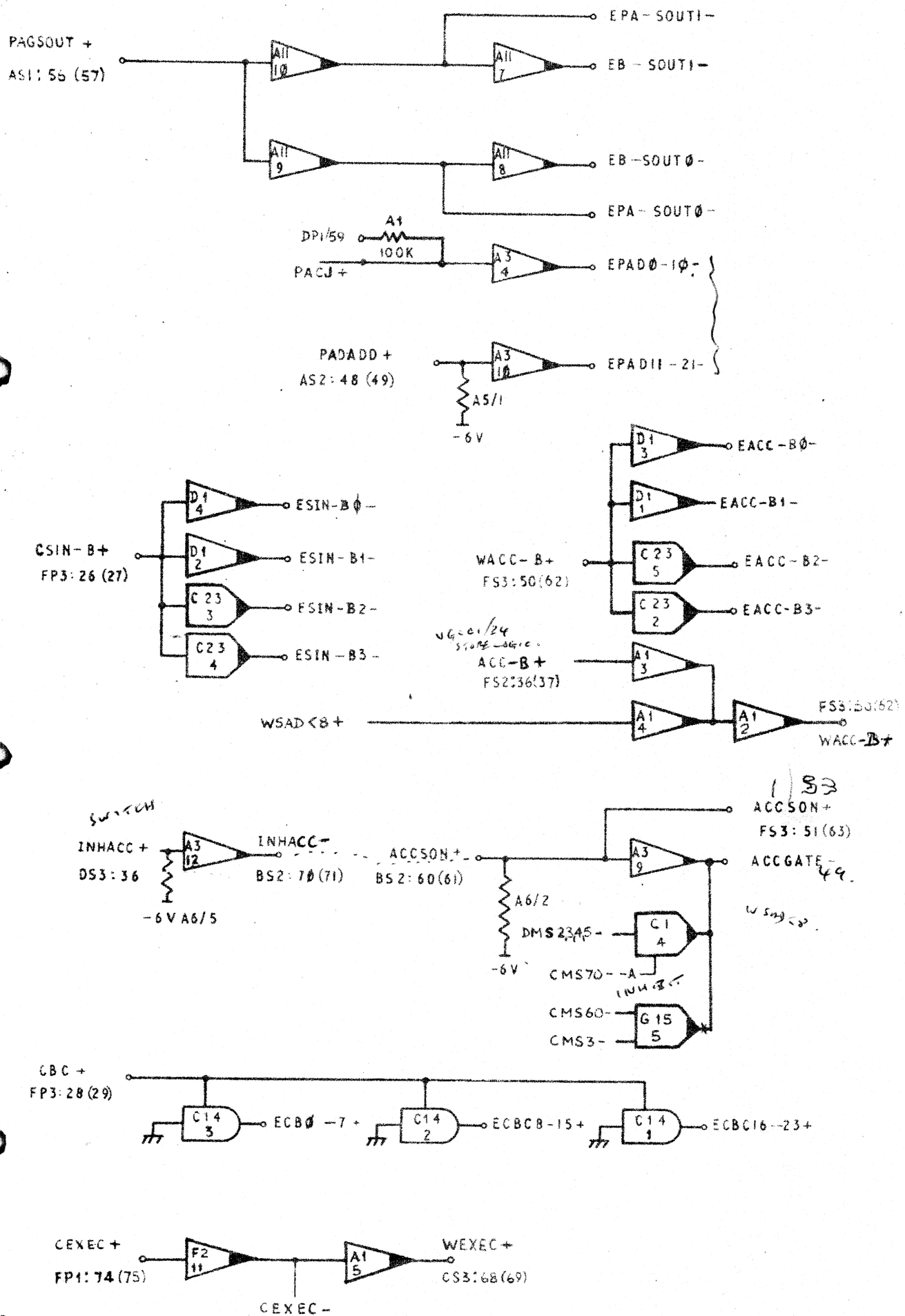

STORE PAC & ACC CONTROL

WGC 02/55

SUB	ISS	1	2	3	4	5	6	7	8	9					

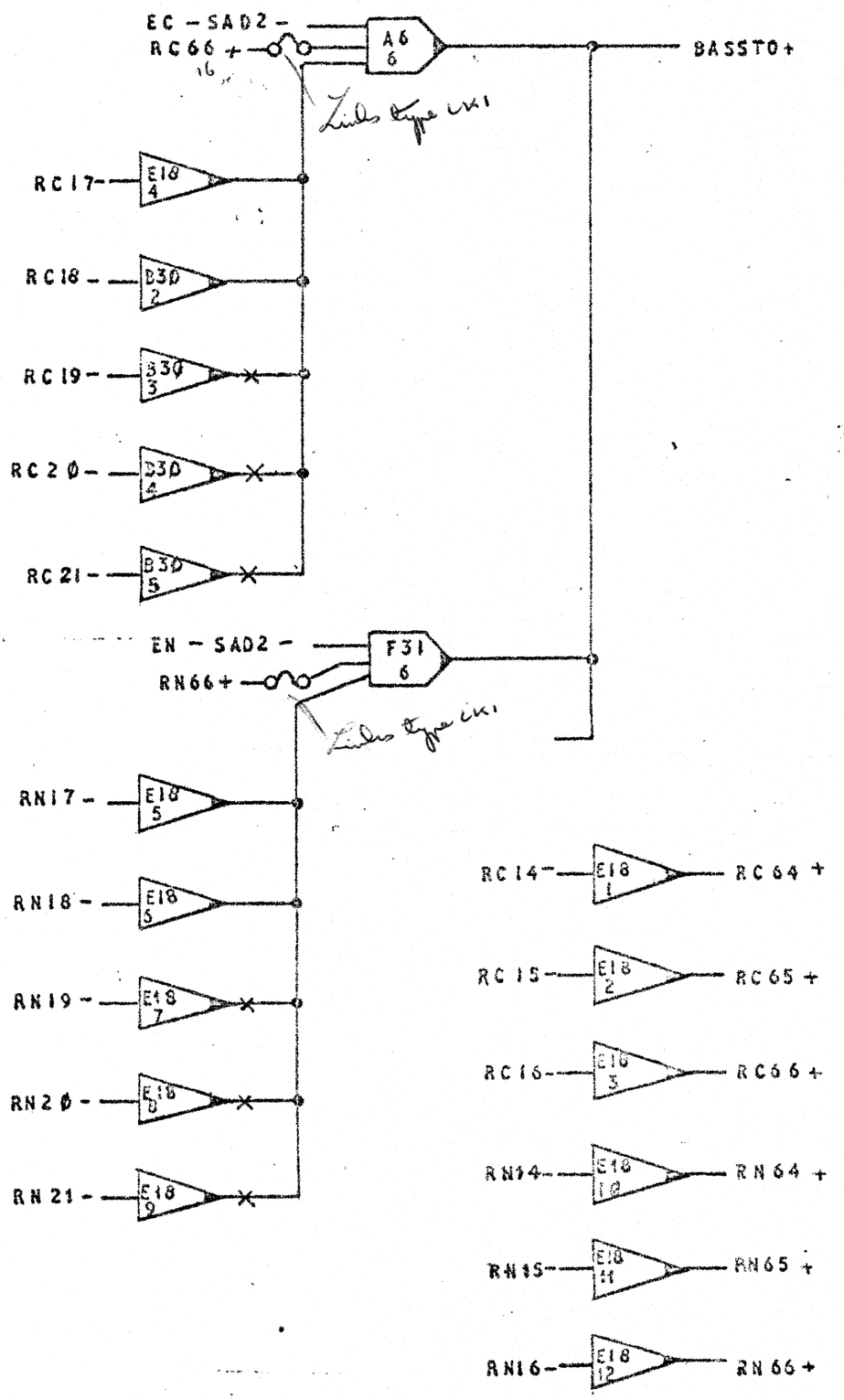

LINKS TYPE LK1

WGC02/56.

STORE ENABLE

SUB	1SS													
ACW	0827													

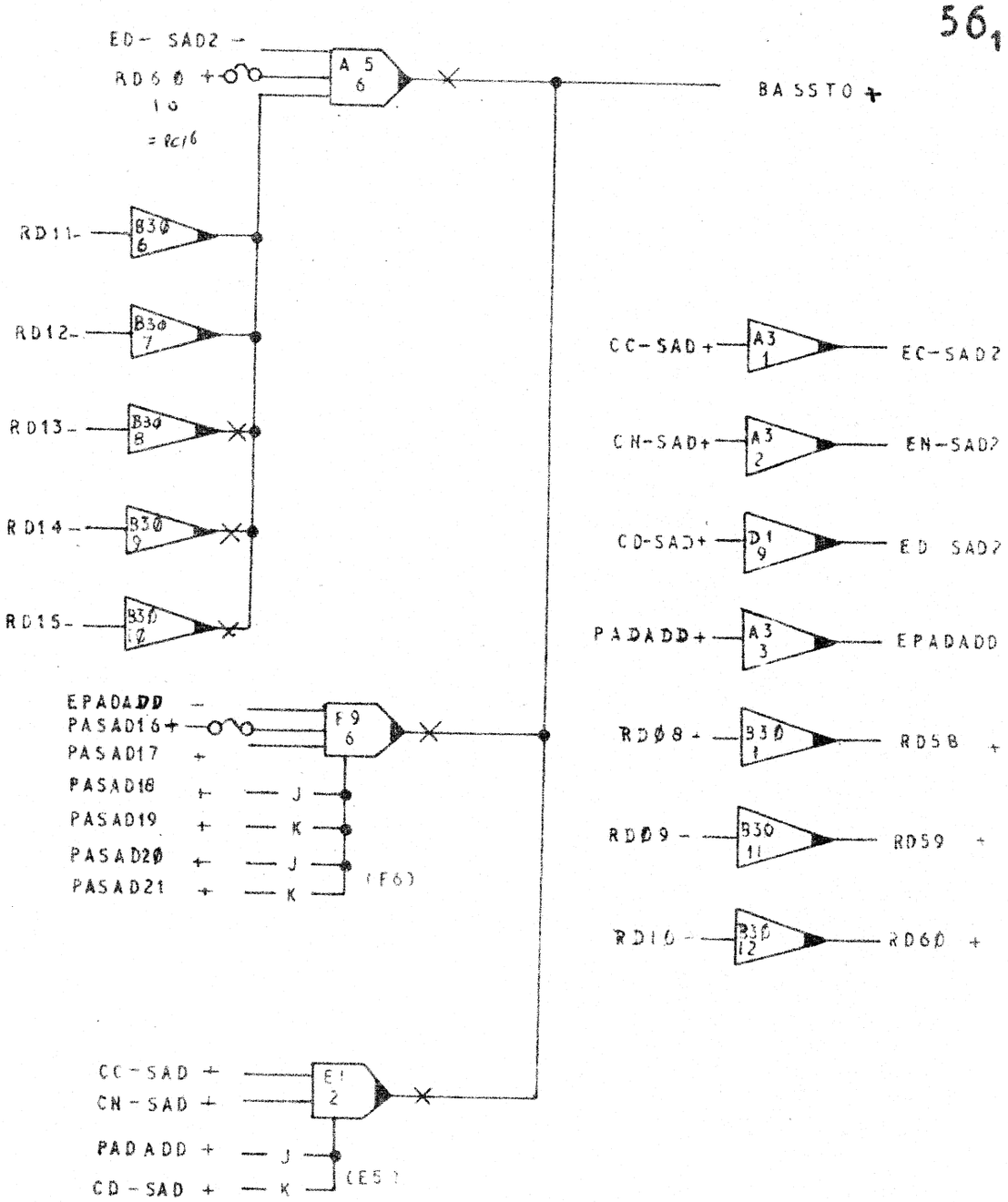

LINKS TYPE LKI

STORE ENABLE

WGC 02/56₁

SUB	ISS	1	2											
ACW	0827	0852	1565											
DATE	25/8/67	18/9/67	30/9/68											

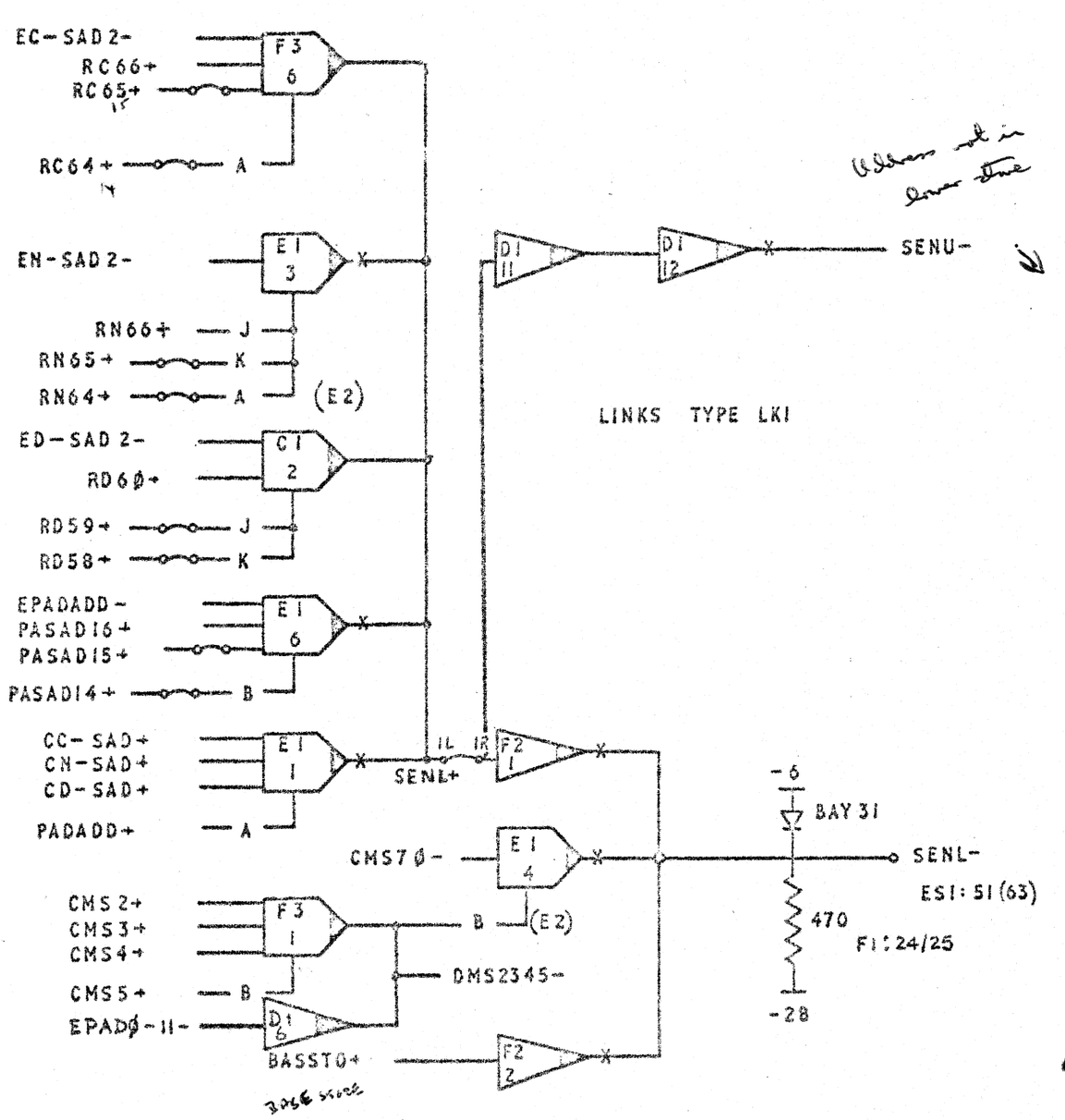

LOWER STORE

SIZE	15+	14+
16K	LK1	LK1
32K	LK1	
64K		

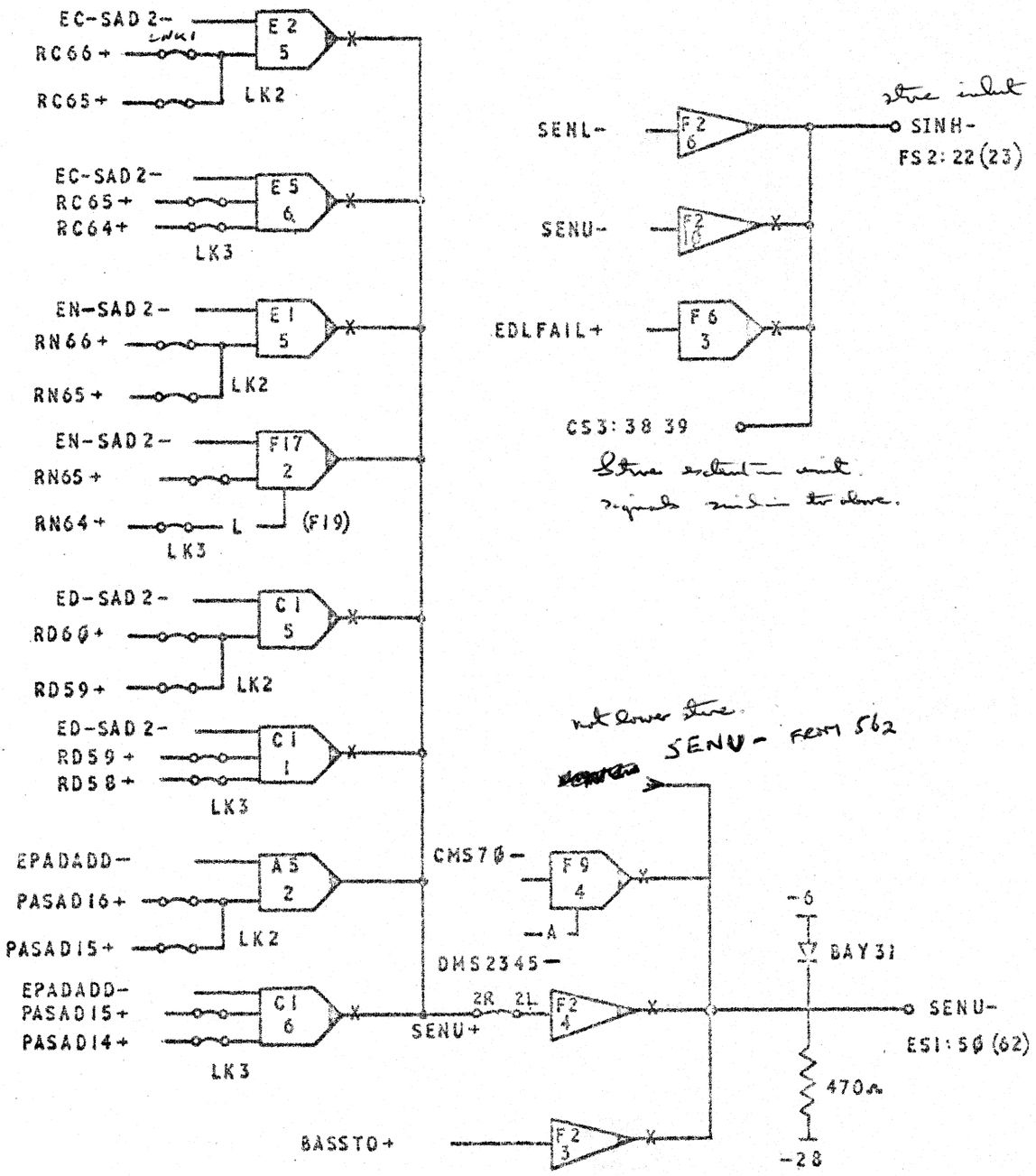

MAXIMUM BASIC STORE

SIZE	16+	15+	14+
32K	LK1	LK2 LK3	
48K	LK1	LK2	LK3
64K	LK1		
80K	LK2	LK3	LK3
96K	LK2	LK3	
128K			

LINK BOARDS

STORE CONFIGURATION

LEFT	E40	RIGHT
SENL+	1	E40/1R
E40/2L	2	SENU+
RC66 +	3	RC64 +
C16LK1	4	C14LK1
C16LK2	5	C14LK3
RN66 +	6	RN64 +
N16LK1	7	N14LK1
N16LK2	8	N14LK3
RD60 +	9	RD58 +
D10LK1	10	D08LK1
D10LK2	11	D08LK3
PASAD16+	12	PASAD14+
PA16LK1	13	PA14LK1
PA16LK2	14	PA14LK3
RC65+	15	RD59 +
C15LK1	16	D09LK1
C15LK2	17	D09LK2
C15LK3	18	D09LK3
RN65 +	19	PASAD15 +
N15LK1	20	PA15LK1
N15LK2	21	PA15LK2
N15LK3	22	PA15LK3

16+ (rows 3–14) 14+

15+ (rows 15–22) 15+

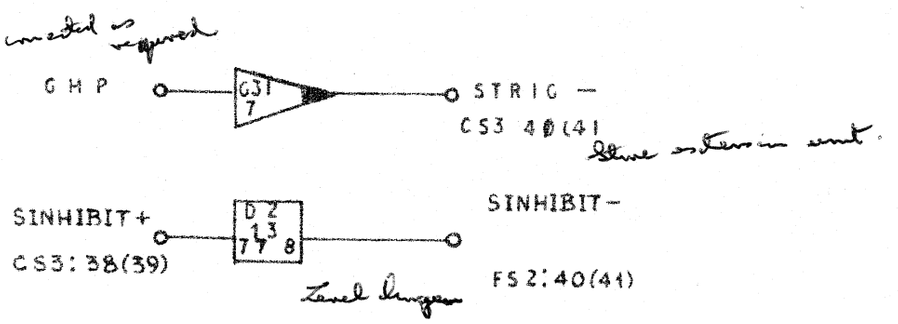

NOTES E40.

1) LOWER STORE ONLY LINK 1L-1R
2) BOTH STORES LINK 1L-1R AND 2L-2R.
3) UPPER STORE ONLY LINK 1L-2L.
4) CHOSE NECESSARY LINKS FROM TABLES ON 562, 563 AND LINK TO SOURCE E.G. RC 66+

SAMPLE WIRING OF E40 FOR USUAL STORE CONFIGURATIONS

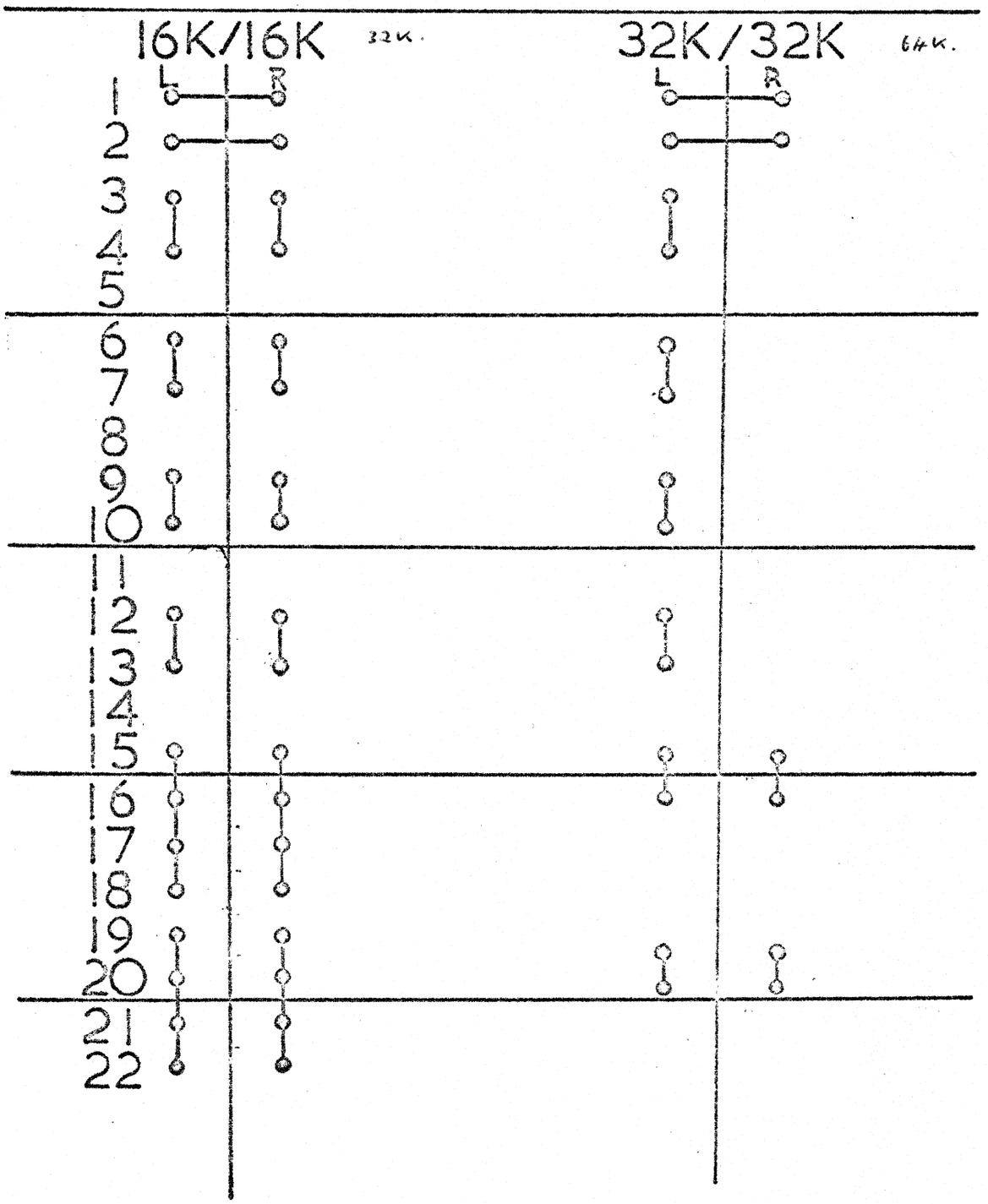

SUB	ISS
ACW	0885

I.C.T.1900 M & V SERIES COMPUTERS

LINK PACKAGE FITTED TO WGC.02 AT E40

Link Package E40 is to be modified to these instructions only when the machine is Cabled for 'Basic Store'.

1) LINK PACKAGE AT WGC.02 - E40

Modification to this Package is based on the Core Store configuration of the Machine.

Examine Core Store configuration to determine :-

(a) Total Store Capacity.

(b) Size and Number of Modules.

Add Links as follows :-

(a) For One Store Module Link 1L to 1R

(b) For Two Store Modules Link 1L to 1R and 2L to 2R.

(c) Reading off against Total Store Capacity, Add Links as indicated in Table 1.

TABLE 1			
Total Store Capacity	16+	15+	14+
32K	LK.1	LK.2&3	-
48K	[illegible]	LK.2	LK.3
64K	LK.1	-	-
80K	LK.2	LK.3	LK.3
96K	LK.2	LK.3	-
128K	-	-	-

SEE TABLE 3

(d) Reading off against the Lower Store Module Capacity, Add Links as indicated in Table 2.

TABLE 2		
Lower Store Capacity	15+	14+
16K	LK.1	LK.1
32K	LK.1	-
64K	-	-

SEE TABLE 3

N.B. THE "LOWER" STORE MODULE IS THAT WHICH IS FITTED NEAREST TO THE LOGIC IN THE MACHINE CONFIGURATION.

TABLE 3

LINK No.	16+	15+	14+
LK.1	3L to 4L	15L to 16L	3R to 4R
	6L to 7L	19L to 20L	6R to 7R
	9L to 10L	15R to 16R	9R to 10R
	12L to 13L	19R to 20R	12R to 13R
LK.2	3L to 5L	15L to 17L	-
	6L to 8L	19L to 21L	-
	9L to 11L	15R to 17R	-
	12L to 14L	19R to 21R	-
LK.3	-	15L to 18L	3R to 5R
	-	19L to 22L	6R to 8R
	-	15R to 18R	9R to 11R
	-	19R to 22R	12R to 14R

STANDBY IS SLOW PERIPHERAL IN BLOCK 0.0.

TY IN BIT 18.
TY OUT BIT 19.
NON MODE BIT 21
ELLEGAL OP BIT 22

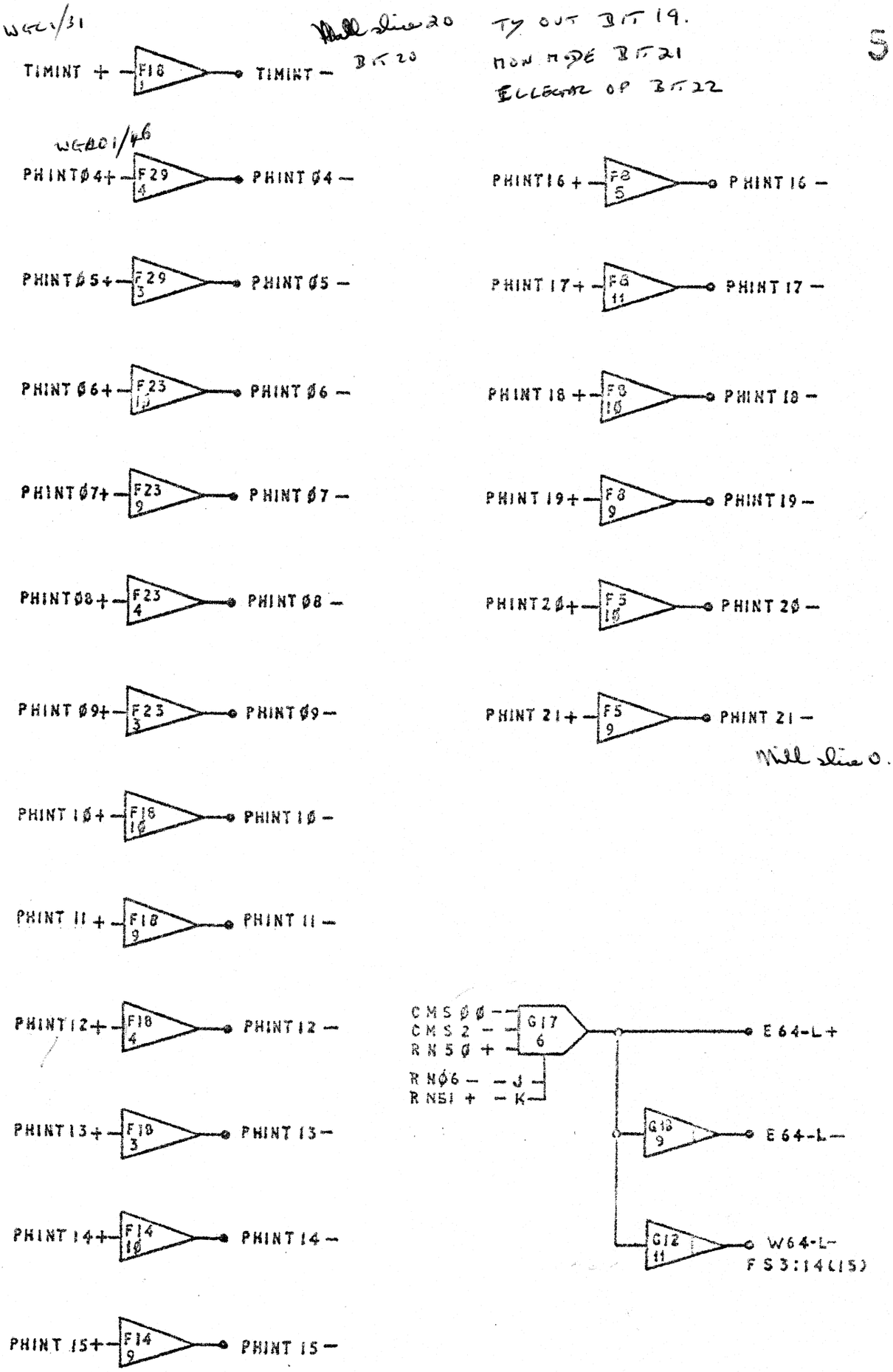

SPECIAL REG 64

SPECIAL REGISTER 64 W.G.C.Ø 2/57

SUB.	1SS														

STANDARD 12 PERI MAX.

65

WIRE 07

PAL.

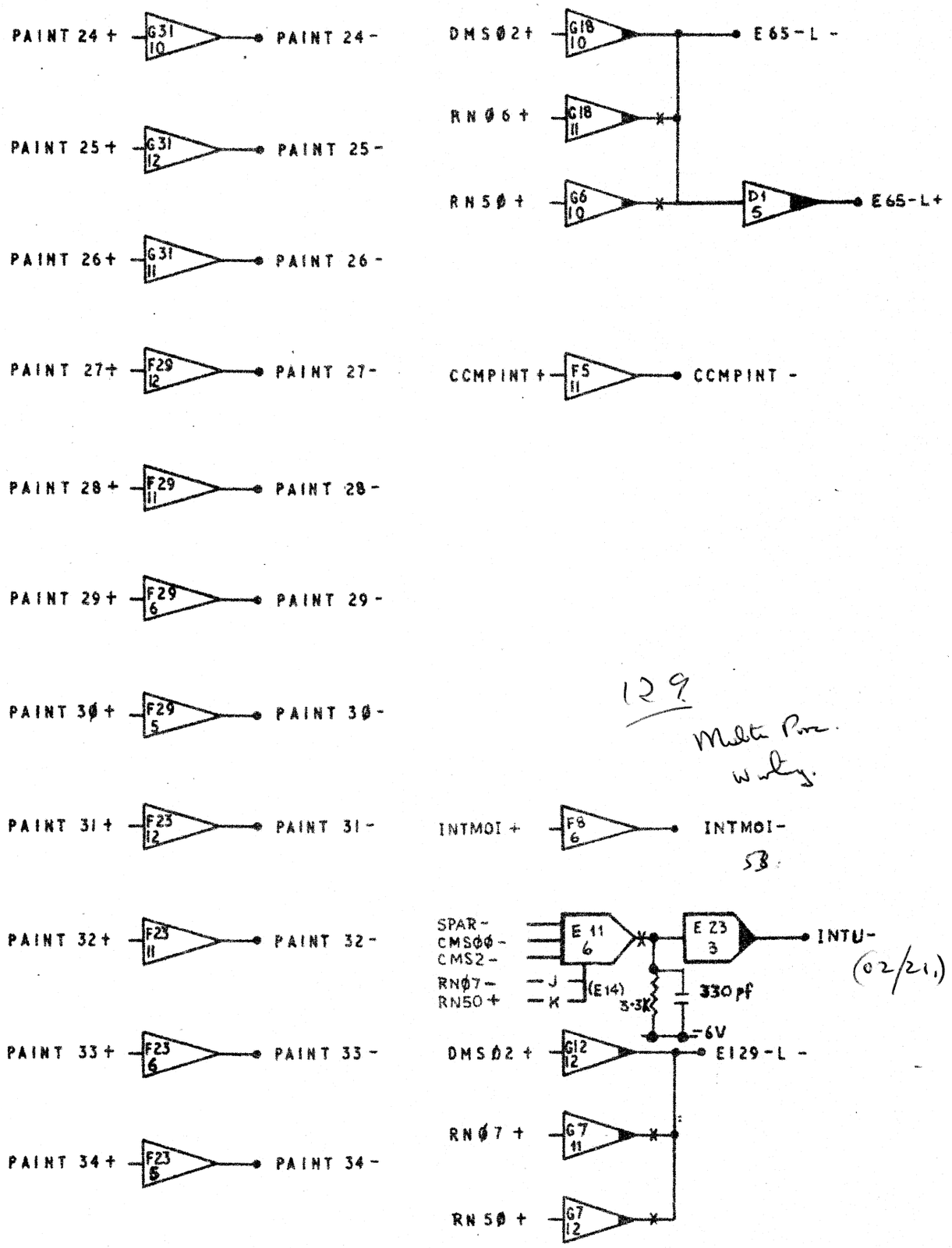

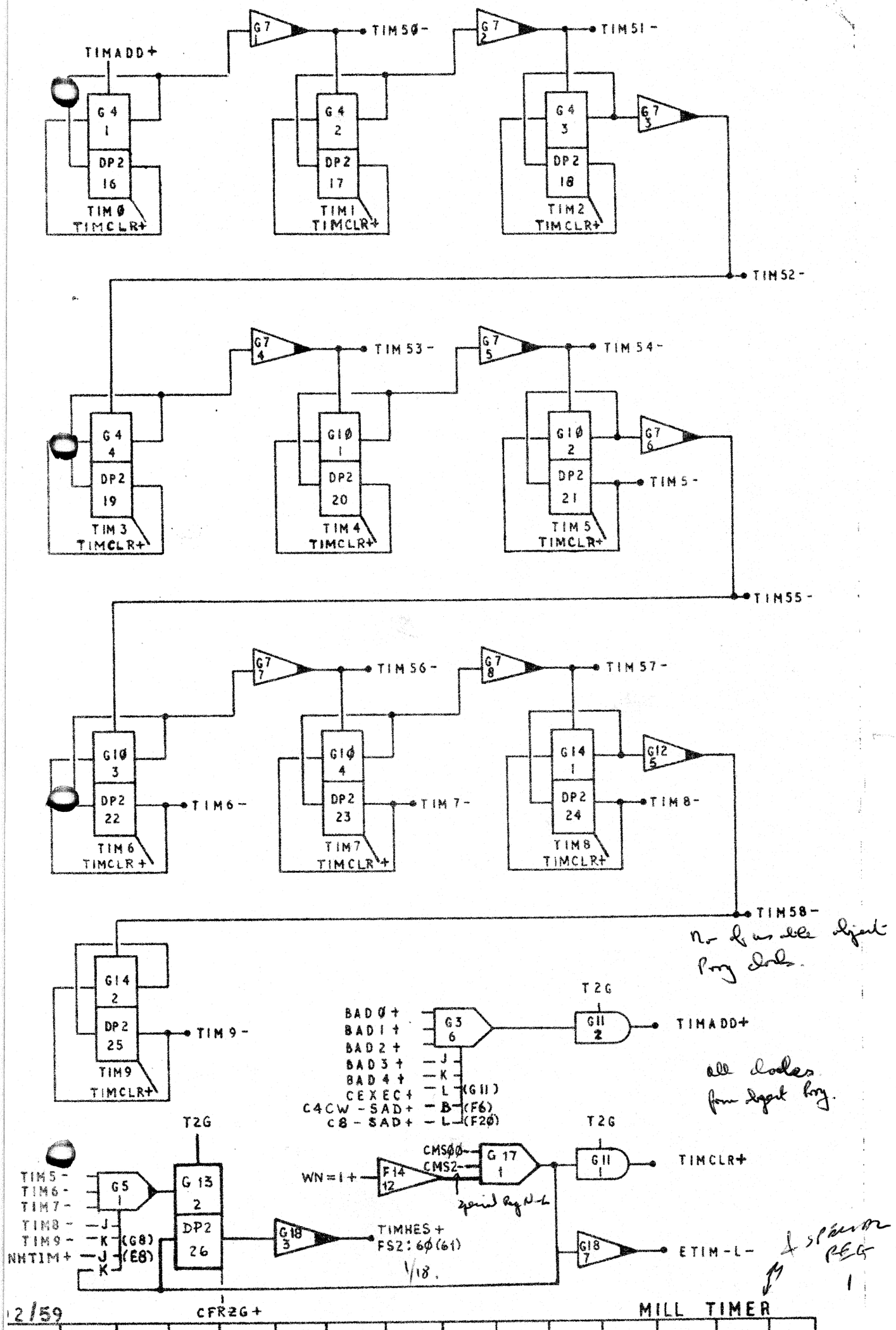

Nor & was also digit Prog loads.

& special REG 1

J FIELD DECODE.

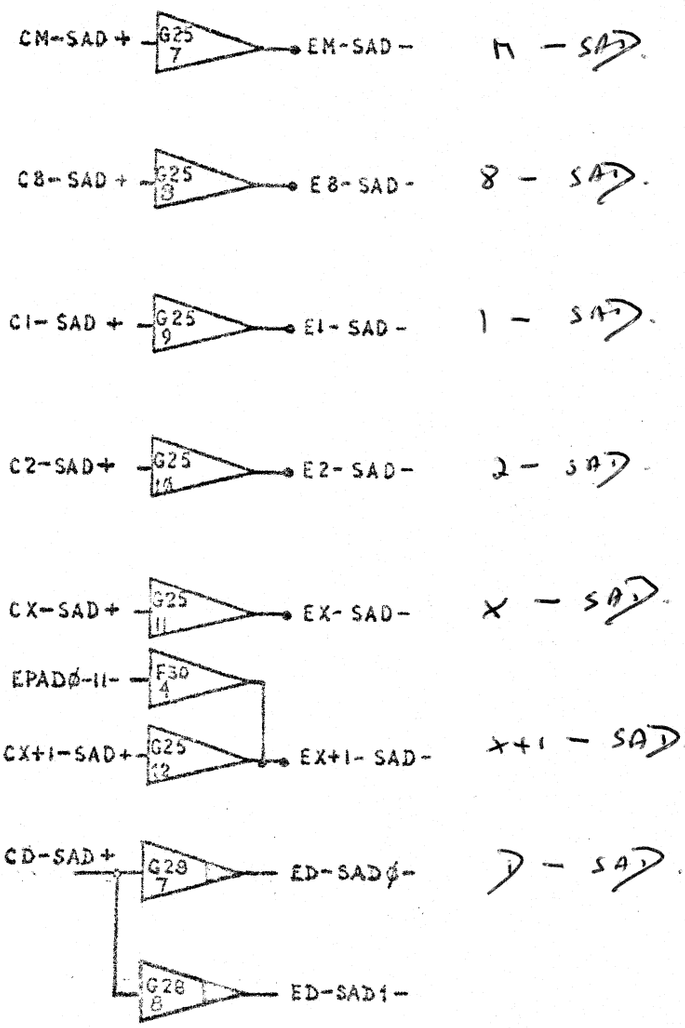

WGCØ1/21

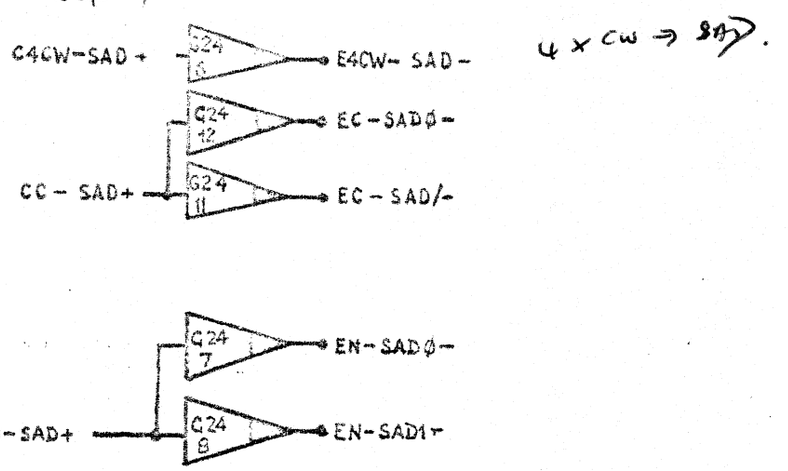

SAD FIELD DECODE

WGCØ2/6

SUB	ISS	1													

K FIELD DECODE.

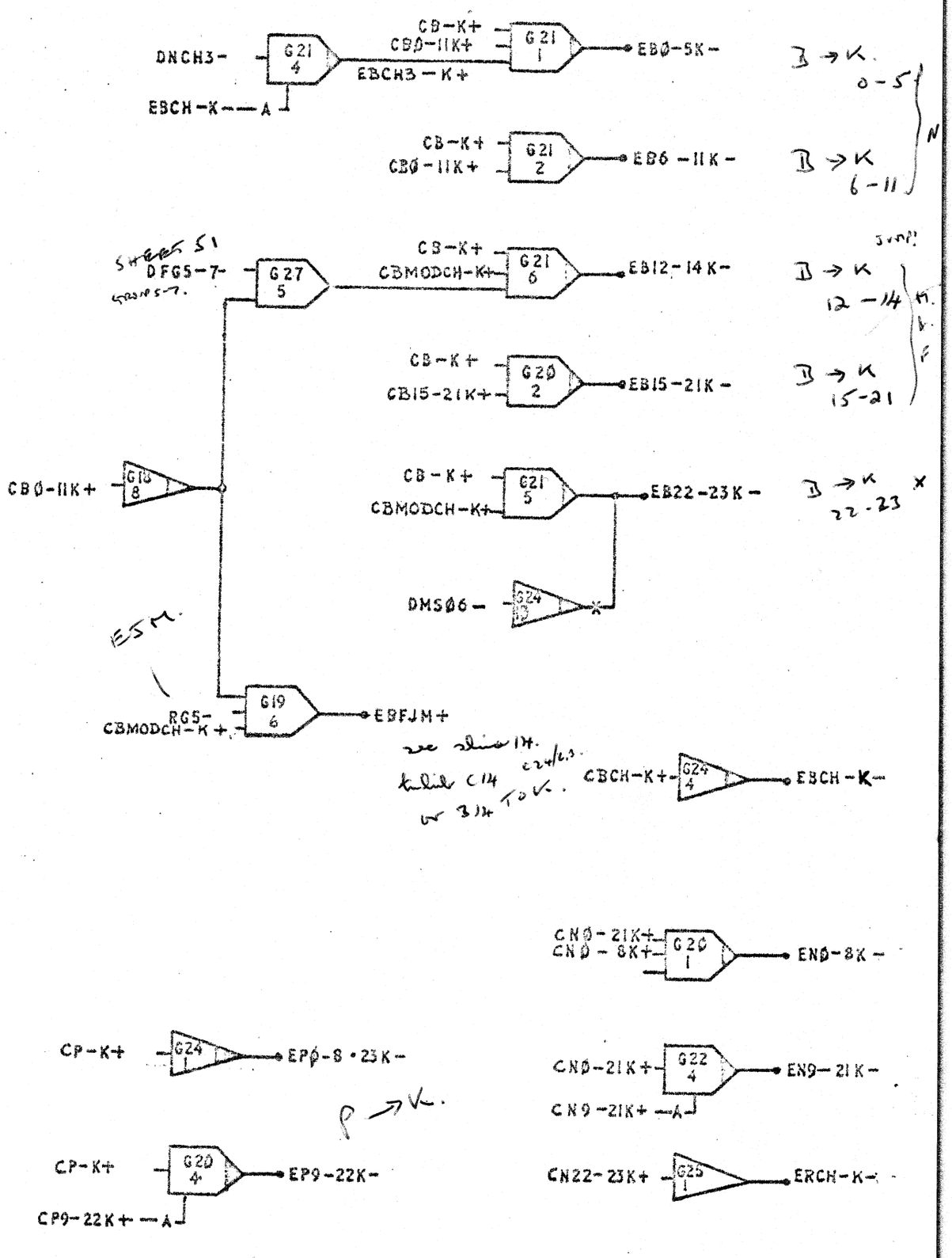

K FIELD DECODE.

WGC02/61

SUB.	ISS	1												
A.C.W.	0827	0862												

ADDITIONAL DECODES OF FIXED STORE. 6L

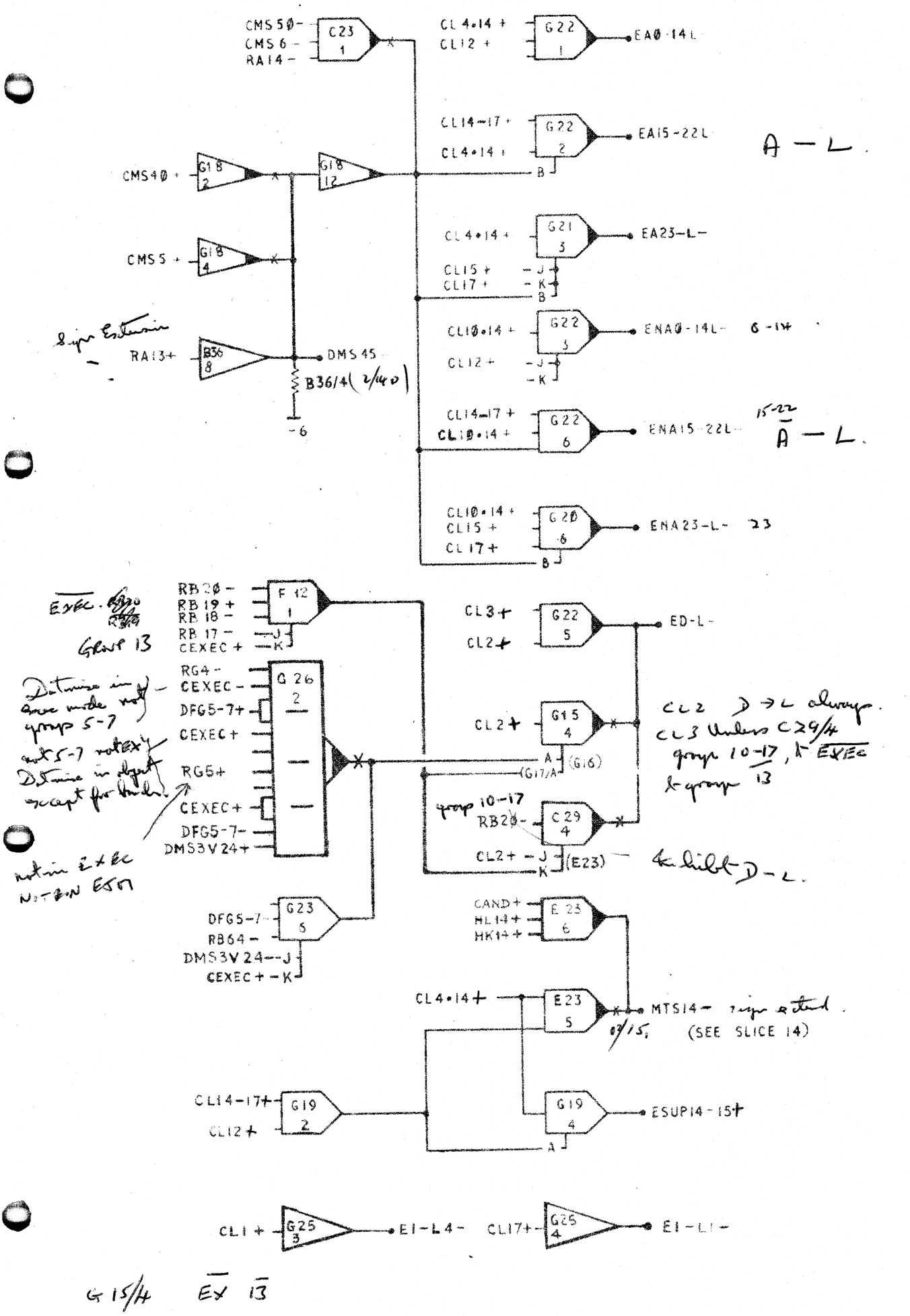

L FIELD DECODE WGCØ2/62

SUB	ISS	1	7												

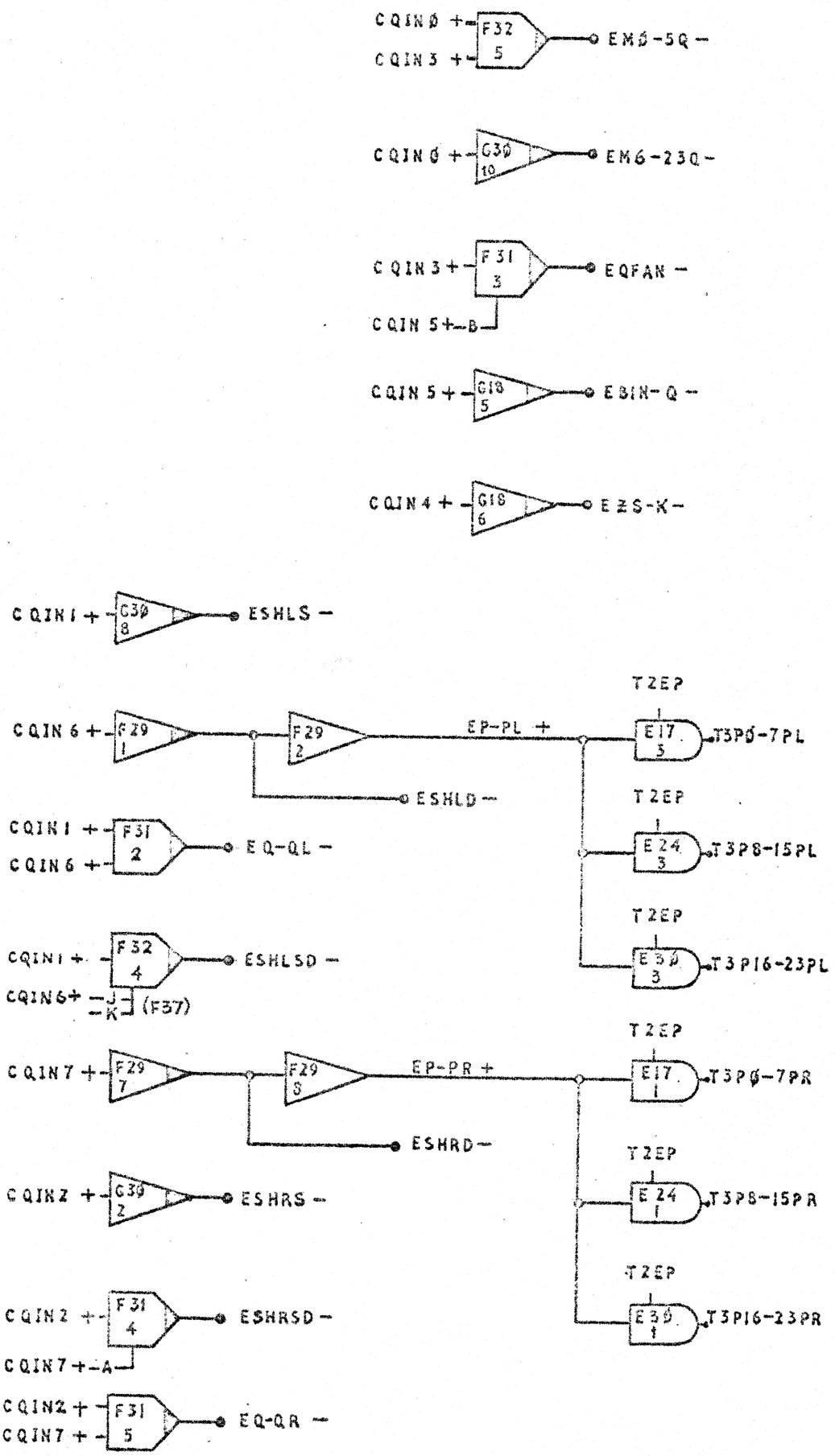
CQINØ +
CQIN3 +
F32 5
EMØ-5Q −
CQINØ +
G3Ø 10
EM6-23Q −
CQIN3 +
F31 3
EQFAN −
CQIN 5+ B
CQIN 5 +
G18 5
EBIN-Q −
CQIN4 +
G18 6
EZS-K −
CQIN1 +
G3Ø 8
ESHLS −
CQIN 6 +
F29 1
F29 2
EP-PL +
ESHLD −
T2EP
E17 5
T3PØ-7PL
T2EP
E24 3
T3P8-15PL
T2EP
E3Ø 3
T3P16-23PL
CQIN1 +
CQIN6 +
F31 2
EQ-QL −
CQIN1 +
CQIN6+
F32 4
J
K
(F37)
ESHLSD −
CQIN7 +
F29 7
F29 8
EP-PR +
ESHRD −
T2EP
E17 1
T3PØ-7PR
T2EP
E24 1
T3P8-15PR
T2EP
E3Ø 1
T3P16-23PR
CQIN2 +
G3Ø 2
ESHRS −
CQIN2 +
F31 4
ESHRSD −
CQIN7 + A
CQIN2 +
CQIN7 +
F31 5
EQ-QR −

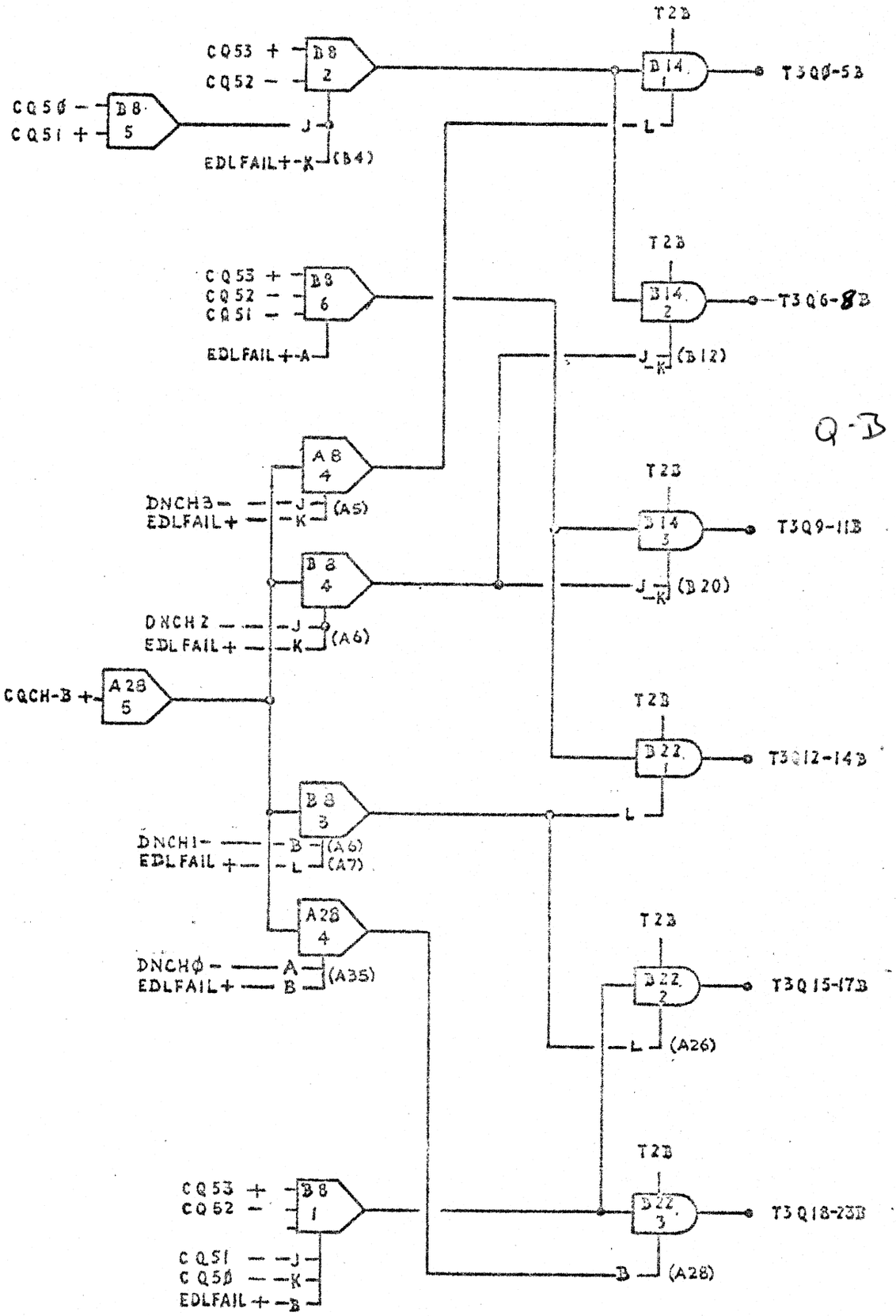
T2B
CQ53 +
CQ52 −
B8 2
B14 1
T3Q0-5B
CQ50 −
CQ51 +
B8 5
J
L
EDLFAIL+ K
(B4)
T2B
CQ53 +
CQ52 −
CQ51 −
B8 6
B14 2
T3Q6-8B
EDLFAIL+ A
J K
(B12)
Q-B.
A8 4
T2B
DNCH3 −
EDLFAIL +
J
K
(A5)
B14 3
T3Q9-11B
B8 4
J K
(B20)
DNCH2 −
EDLFAIL +
J
K
(A6)
CQCH-B +
A28 5
T2B
B22 1
T3Q12-14B
B8 3
L
DNCH1 −
EDLFAIL +
B
L
(A6)
(A7)
A28 4
T2B
DNCHØ −
EDLFAIL +
A
B
(A35)
B22 2
T3Q15-17B
L
(A26)
T2B
CQ53 +
CQ52 −
B8 1
B22 3
T3Q18-23B
CQ51 −
CQ5Ø −
EDLFAIL +
J
K
B
B
(A28)

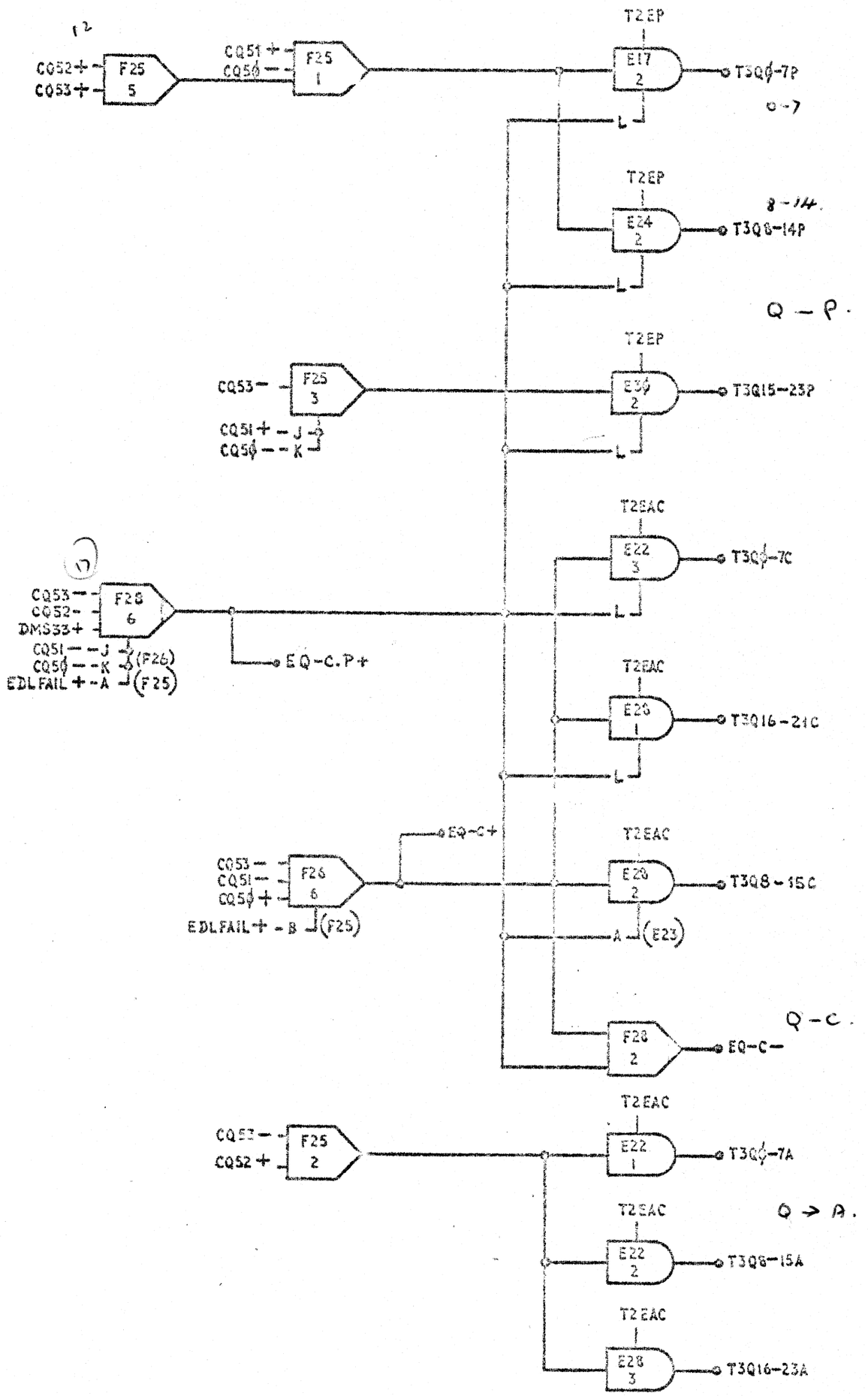

C OUT FIELD DECODE.

WGC02/65

SUB.	ISS														
A.C.W.	0027														

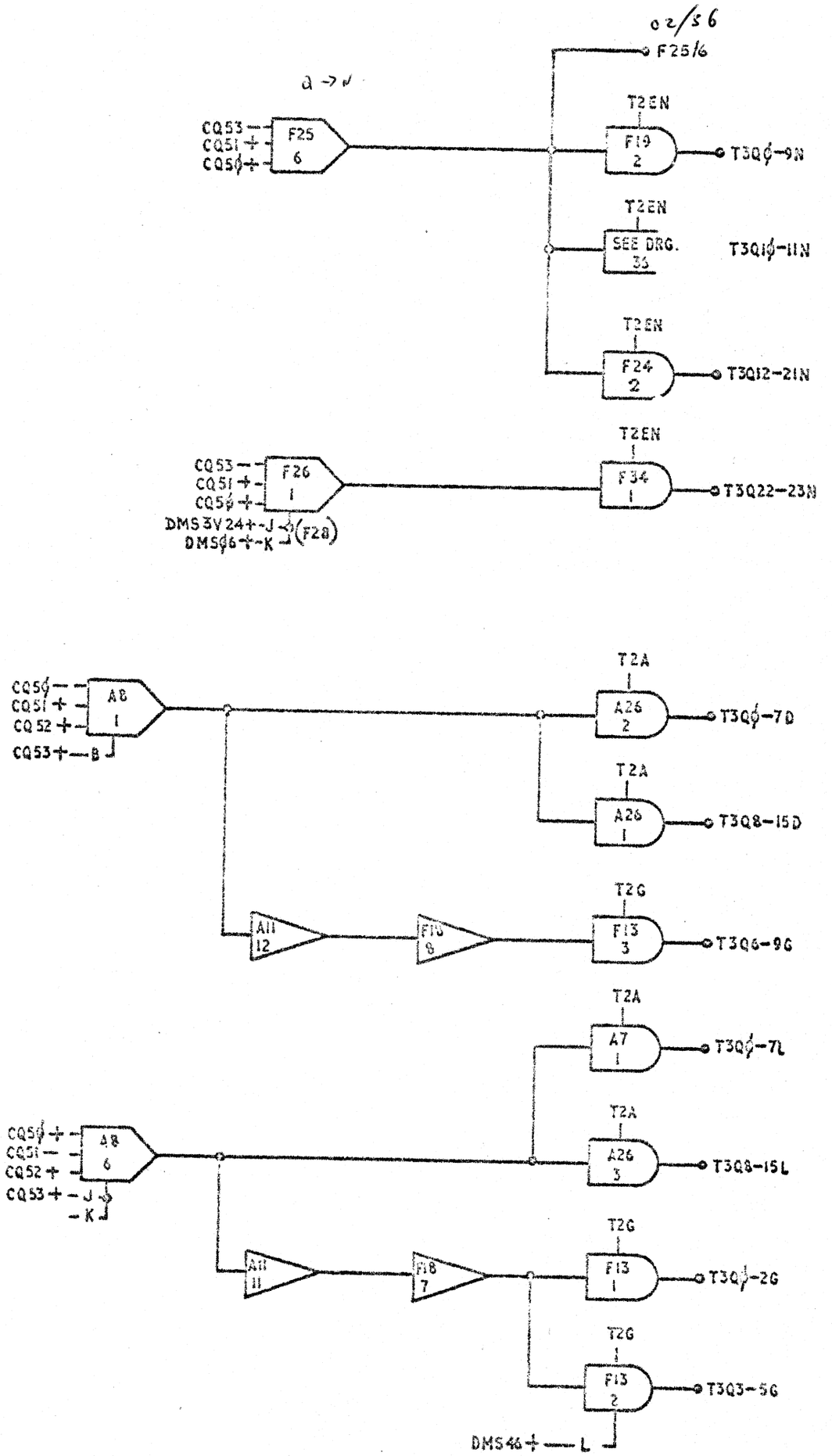

DUT FIELD DECODE.

WGCϕ2/66

D.	ISS														
A.W.	0027														

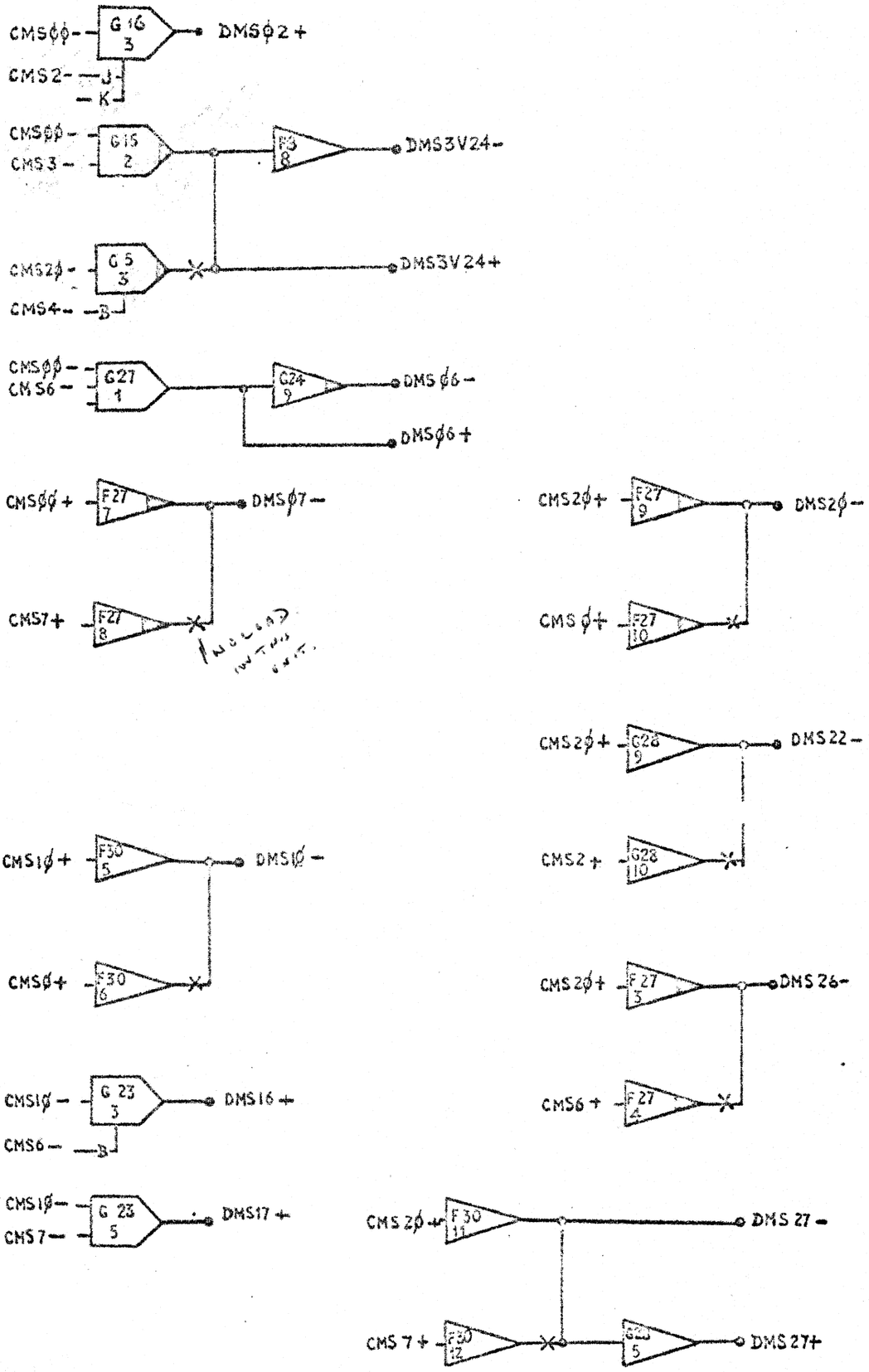

MISC FIELD DECODE WGCØ2 / 67

SUB	1SS	1														
ACW	0827	0885														

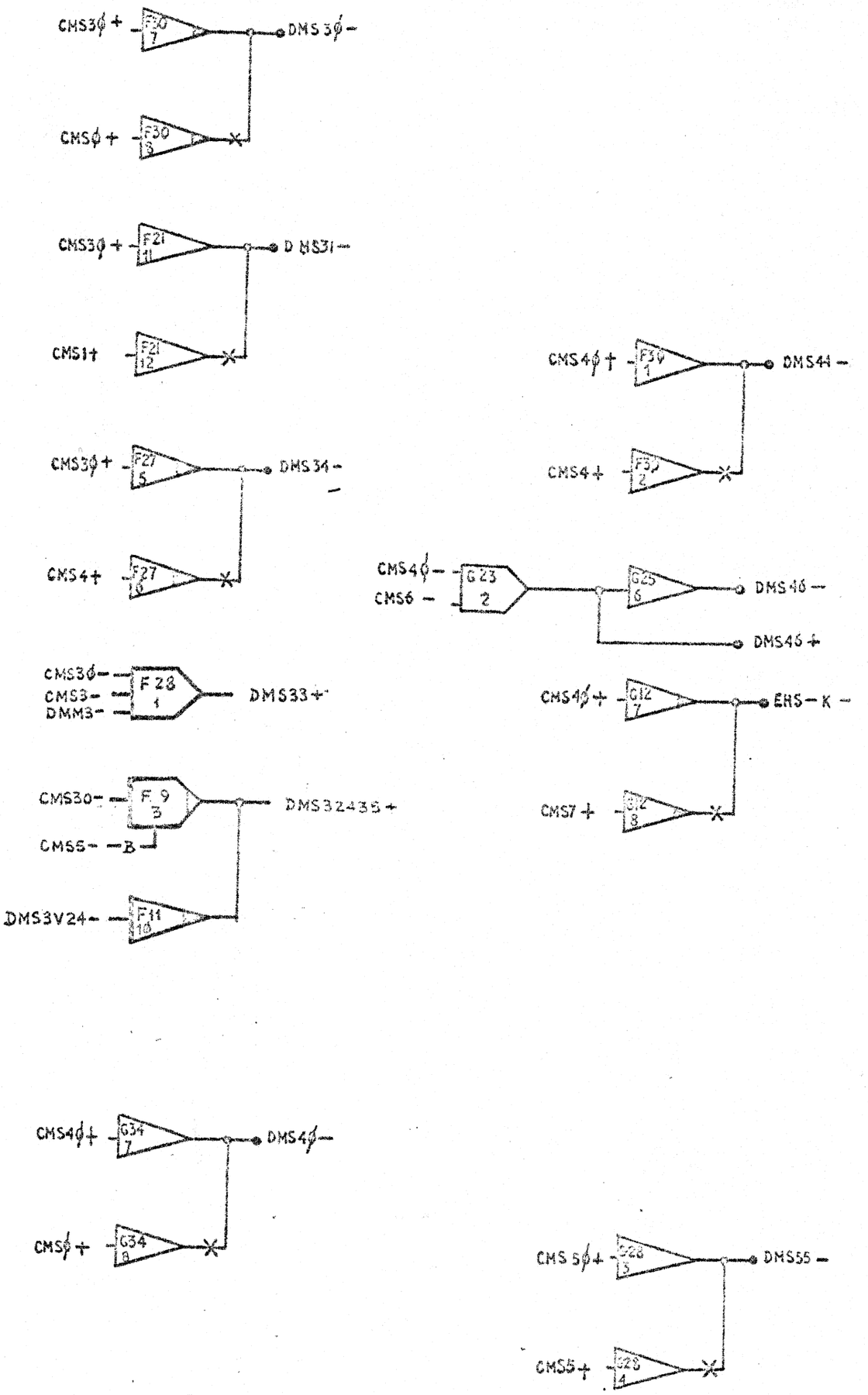

MISC FIELD DECODE

WGCϕ2 / 68

SUB	1SS	1													
ACW	3827	0835													

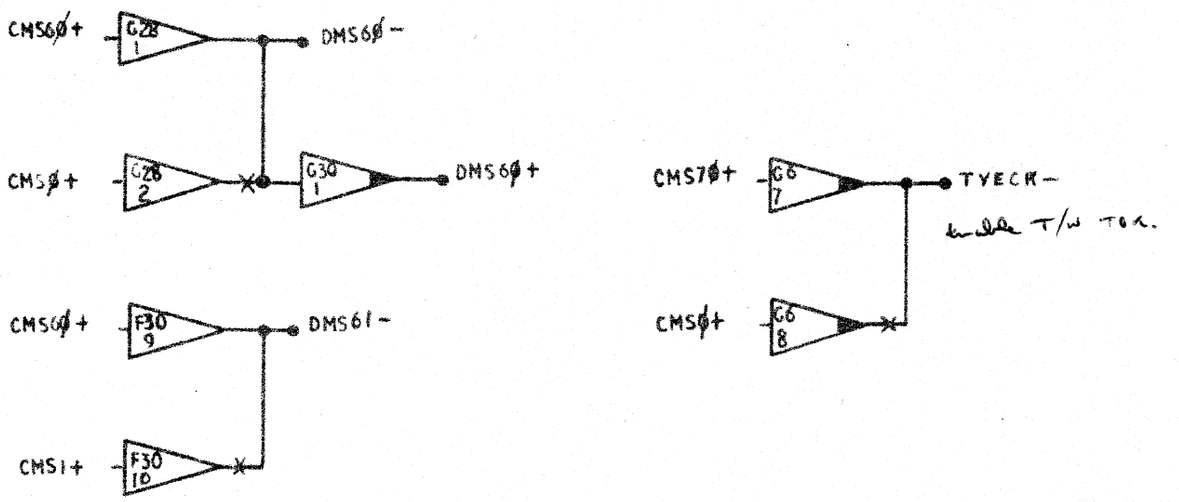
CMS6Ø+
G28 1
DMS6Ø-
CMSØ+
G28 2
G30 1
DMS6Ø+
CMS7Ø+
G6 7
TYECH-
enable T/W TOK.
CMSØ+
G6 8
CMSØ+
F30 9
DMS61-
CMS1+
F30 10

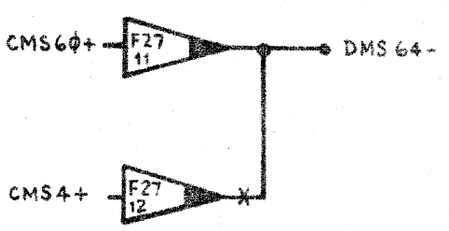
CMS6Ø+
F27 11
DMS 64-
CMS4+
F27 12

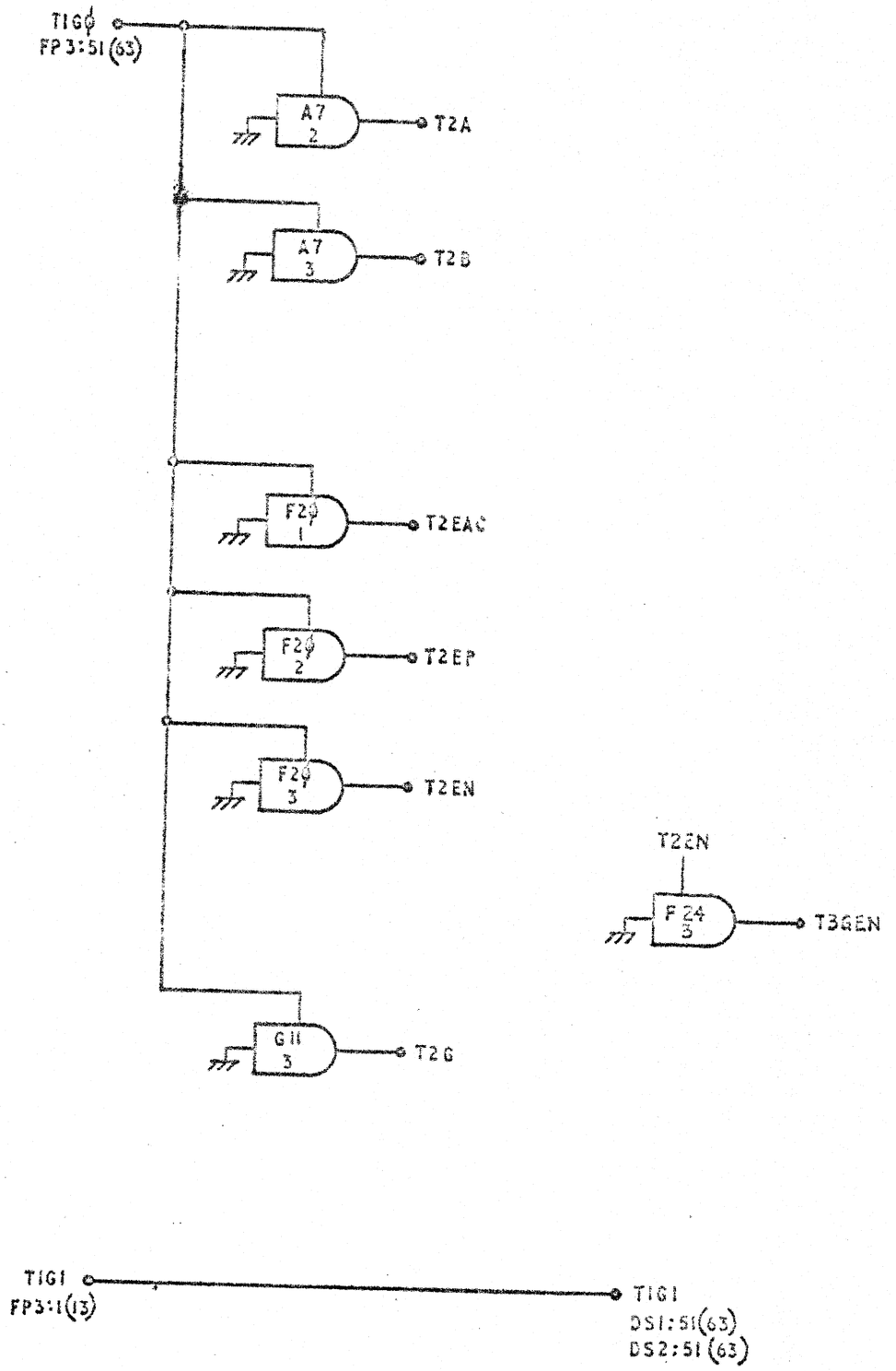
T1Gϕ
FP3:51(63)
A7
2
T2A
A7
3
T2B
F2ϕ
1
T2EAC
F2ϕ
2
T2EP
F2ϕ
3
T2EN
T2EN
F24
5
T3GEN
G11
3
T2G
T1G1
FP3:1(13)
T1G1
DS1:51(63)
DS2:51(63)