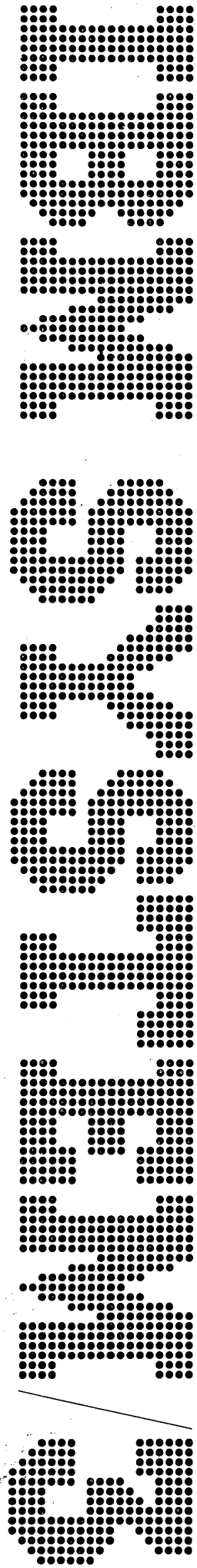

IBM System/3
5445 Disk Storage
Program Planning Manual

GC21-5039-1
File No. S3-34

Second Edition (October 1974)

This is a major revision of, and obsoletes, GC21-5039-0. Extensive changes have been made throughout so this manual should be reviewed in its entirety.

Changes are periodically made to the information herein; before using this publication in connection with the operation of IBM Systems, consult the latest *IBM System/3 Bibliography,* Order Number GC20-8080, for the editions that are applicable and current.

Requests for copies of IBM publications should be made to your IBM representative or to the IBM branch office serving your locality.

A Reader's Comment Form is at the back of this publication. If the form is gone, comments may be addressed to IBM Corporation, Publications, Department 245, Rochester, Minnesota 55901.

©Copyright International Business Machines Corporation 1971, 1974

This manual contains introductory material about programming aspects of the IBM System/3 5445 Disk Storage as the 5445 relates to the IBM System/3 Model 15 and the IBM System/3 Model 10 Disk System.

This manual is organized in four chapters. The first chapter includes a general description of the 5445, a statement of the system requirements, and some programming considerations. The second chapter is devoted to system support information concerning access methods, split cylinder capability, OCL FILE statements, and system utility programs. The third chapter briefly describes the program products as they apply to the 5445. The fourth chapter discusses System/3-System/360-System/370 compatibility. (Coding information and examples are not discussed in this manual.)

Prerequisite Knowledge

The reader should be familiar with related publications, basic programming concepts, and component operations of the System/3 Model 15 or Model 10 Disk System.

Related Publications

Additional information about the Model 10 Disk System may be found in the following publications:

- *IBM System/3 Model 10 Components Reference Manual,* GA21-9103
- *IBM System/3 Model 10 Disk System Control Programming Reference Manual,* GC21-7512
- *IBM System/3 Model 10 Disk System Halt Guide,* GC21-7540
- *IBM System/3 Model 10 Disk System Control Programming Macros Reference Manual,* GC21-7562
- *IBM System/3 Disk System Introduction,* GC21-7510

Additional information about the Model 15 may be found in the following publications:

- *IBM System/3 Model 15 Components Reference Manual,* GA21-9193
- *IBM System/3 Model 15 System Control Programming Reference Manual,* GC21-5077
- *IBM System/3 Model 15 System Messages,* GC21-5076
- *IBM System/3 Model 15 System Control Programming Macros Reference Manual,* GC21-7608
- *IBM System/3 Model 15 Introduction,* GC21-5094

The following publications contain information about both Model 10 Disk System and the Model 15:

- *IBM System/3 Disk Concepts and Planning Guide,* GC21-7571
- *IBM System/3 RPG II Reference Manual,* SC21-7504
- *IBM System/3 Subset American National Standard COBOL Reference Manual,* SC28-6452
- *IBM System/3 FORTRAN IV Reference Manual,* GC28-6874
- *IBM System/3 Basic Assembler Reference Manual,* SC21-7509
- *IBM System/3 Disk Sort Reference Manual,* SC21-7522

CONTENTS

CHAPTER 1. INTRODUCTION 1
General Description 1
System Requirements 1
Programming Considerations and Attractions 1
Model 10 Disk System Considerations 1
Model 15 Considerations 2
Utility Programs 2
Split Cylinders 2
RPG II Feature (Model 10 Only) 2
Disk Sort Feature (Model 10 Only) 2

CHAPTER 2. SYSTEM SUPPORT 3
Access Methods Supported 3
Split Cylinder Support 4
OCL FILE Statement 5
Keyword Parameters for Single Volume Files 5
Keyword Parameters for Multivolume Files 8
Utility Programs 8
Program Halts 9
OCL Statements 9
END Statement 9
Utility Control Statement Formats 9
Program Descriptions 10
Disk Initialization Program 10
Alternate Track Assignment Program 11
Alternate Track Rebuild Program 12
File and Volume Label Display Program 14
File Delete Program 15
Copy/Dump Program 16
Dump/Restore Program 18

CHAPTER 3. PROGRAM PRODUCT SUPPORT 19
RPG II 19
Disk Sort 19
Subset ANS COBOL 20
FORTRAN IV 20
Magnetic Character Reader Utility Program (Model 10 Only) 20
Basic Assembler 20

CHAPTER 4. COMPATIBILITY 21
System/3 to System/360-System/370 21
System/360-System/370 to System/3 21

INDEX 23

Chapter 1. Introduction

The IBM 5445 Disk Storage offers more file capacity and greater performance than the IBM 5444. You can attach up to two 5445 units to the System/3 Model 10 Disk System and up to four units to the System/3 Model 15. Because the programming support for this storage is patterned after that for the 5444 Disk Storage Drive, the programming necessary to implement the device into an existing system is reduced.

GENERAL DESCRIPTION

The IBM 5445 Disk Storage provides large capacity direct access storage—up to 40.96 million bytes for the Model 10 Disk System, and up to 81.92 million bytes for the Model 15. The 5445 uses removable disk packs which are organized by tracks, cylinders, and sectors.

A track consists of a band of information on a single disk surface. A cylinder is formed by relating all of the corresponding tracks on the disk surfaces of a disk pack. (The same cylinder address is used for all corresponding tracks on the disk.) Each track is divided into 20 sectors (records) which have individual sector addresses. The 5445 is used only for data storage. No libraries can reside on the 5445.

SYSTEM REQUIREMENTS

The IBM 5445 Disk Storage is designed to operate with the standard System/3 Model 10 Disk System and Model 15 minimum configurations.

The Model 10 configuration is:

- 5410 Processing Unit Model A13 (12K)
- 5203 Printer Model 1 or 1403 Printer Model 2
- 5444 Disk Storage Drive Model 1
- 5424 Multi-Function Card Unit Model A1

For a description of these units or information concerning the operation and characteristics of the System/3 Model 10 Disk System, refer to *IBM System/3 Model 10 Components Reference Manual,* GA21-9103

The Model 15 configuration is:

- 5415 Processing Unit Model A17 (48K)
- 3277 Display Station Model 1 with Operator Console Keyboard Feature (4632)
- 5444 Disk Storage Drive Model A2
- 1403 Printer Model 5 or 2 or N1
- One of the following:

  5424 Multi-Function Card Unit Model A1 or A2
  2560 Multi-Function Card Machine Model A1 or A2
  1442 Card Read Punch Model 6 or 7

For a description of these units or information concerning the operation and characteristics of the System/3 Model 15, refer to *IBM System/3 Model 15 Components Reference Manual,* GA21-9193.

PROGRAMMING CONSIDERATIONS AND ATTRACTIONS

Model 10 Disk System Considerations

If the 5445 is attached to the Model 10 Disk System, you can store up to 40.96 million bytes on two online disk packs. The 60 millisecond average access time enables processing of message data that exceeds the present 5444 Disk Storage Drive data transfer rate. Adding another disk storage drive allows combining of multivolume files to gain better throughput. Up to 50 files can be contained on each 5445 disk pack.

System/3 Model 10 disk programming has been modified to support up to two 5445 drives on a System/3 Model 10 and up to two 5444s. The minimum CPU size is 12K bytes; if the dual programming feature (DPF) is used, a minimum of 16K bytes is required. Either disk drive can be identified through OCL (operation control language) statements at program run time. Either or both drives can be addressed by both program levels, when operating in a dual programming environment.

Model 15 Considerations

If the 5445 is attached to the Model 15, you can store up to 81.92 million bytes on four online disk packs. Spooling support on the Model 15 requires a 5445 disk.

The programming support for the 5445 on the Model 15 is included in the basic support for the system; the Model 15 support of the 5445 is identical to that provided by the Model 10, unless indicated otherwise. The basic SCP (System Control Program) can support one, two, three, or four 5445 drives on a Model 15 with one or two 5444s. The minimum CPU size is 48K bytes. Like the Model 10 Disk System drives, Model 15 disk drives can be identified through OCL statements at program run time and can be addressed by either partition of the multiprogramming system.

Utility Programs

Utility programs are available for 5445 disk and data file maintenance. The utility programs provided for the 5445 are parallel to the utilities for the 5444 Disk Storage Drive, except that libraries are not supported on the 5445. Chapter 2 of this manual describes the functions and specifications for the utility programs. For additional information and examples of the utility programs, see the *IBM System/3 Model 10 Disk System Control Programming Reference Manual,* GC21-7512, or the *IBM System/3 Model 15 System Control Programming Reference Manual,* GC21-5077.

Split Cylinders

By using split cylinders, you can arrange more than one data file, of either direct or sequential file organization, on one or more cylinders, with each of the files occupying a corresponding part of each cylinder. A split cylinder file can occupy up to 19 tracks per cylinder. Therefore, you can arrange files in combinations to decrease the access time required.

RPG II Feature (Model 10 Only)

The Disk RPG II 5445 Disk Storage feature (a program product feature) makes possible the processing of data files located on the 5445. This feature is used with the Model 10 only; 5445 support is standard on the Model 15. Additional information about RPG II is provided in Chapter 3.

Disk Sort Feature (Model 10 Only)

The IBM System/3 Disk Sort 5445 Disk Storage feature (a program product feature) provides all the functions of the 5444 Disk Sort program. This feature sorts all single or multivolume disk files. Two types of files created by the Disk Sort program are:

- Sequential files
- Record address files

This feature is used on the Model 10 only; 5445 support is standard on the Model 15.

Additional information about Disk Sort is provided in Chapter 3 or in the *IBM System/3 Disk Sort Reference Manual,* SC21-7522.

The programming support available for the 5445 provides data storage and data retrieval. Up to two drives are supported on the Model 10; up to four drives are supported on the Model 15.

You can reference the 5445 through OCL statements at execution time. When operating in a dual programming environment on the Model 10, either or both drives can be addressed by both program levels. However, the same file cannot be addressed by both program levels at the same time unless:

- Both program levels are using it as input only
- One program level is using it as input and the other is using it as update

The same applies to accessing the 5445s on the Model 15 from both partitions.

ACCESS METHODS SUPPORTED

The System/3 disk system management routines support three types of file organizations:

- Sequential
- Indexed
- Direct

Figure 1 shows the file organizations and the access methods supported. Except as noted, these access methods apply to both single and multivolume files for Model 10 and Model 15. They are supported in a manner consistent with the 5444. Shared input/output methods are not supported for the 5445 files.

Access Methods	File Organization		
	Sequential	Indexed	Direct
Load (output)	X	X	X
Input			
Consecutive	X	X	X
Random by key		X	
Random by relative record number	X	X	X
Sequential by key		X	
Sequential by limits[1]		X	
Add			
Consecutive	X		
Random by key		X	
Sequential by key		X	
Update			
Consecutive	X		X
Random by key		X	
Random by relative record number	X		X
Sequential by key		X	
Sequential by limits[1]		X	

[1] Access method does not apply for multivolume files on the Model 10.

Figure 1. File Organizations and Access Methods Supported for the IBM 5445 Disk Storage

SPLIT CYLINDER SUPPORT

By using split cylinders, you can allocate partial cylinders for a data file. For example you may allocate File A, the master file, on tracks 0-3 of cylinders 3-5 (Figure 2). File B resides on tracks 4-7 of the same cylinders. The remaining tracks are reserved for files associated with the master file. The following information is specified in the FILE statement for split cylinder files:

- The beginning cylinder
- The number of tracks to be allocated per cylinder
- The total number of cylinders to be allocated

When using split cylinders, you can specify as many as 19 tracks per cylinder for a data file.

Split cylinder is supported only for sequential and direct file organizations and their associated access methods. It is not available for either multivolume files or indexed file organizations.

The first file created in a set of split cylinder files is the master file. It must begin with the first track of the cylinder. When split cylinder files of the same set are allocated in different jobs, the master file must be allocated in the first job.

The SPLIT parameter, a keyword parameter for the OCL FILE statement that is used when creating split cylinders, is discussed later in this chapter.

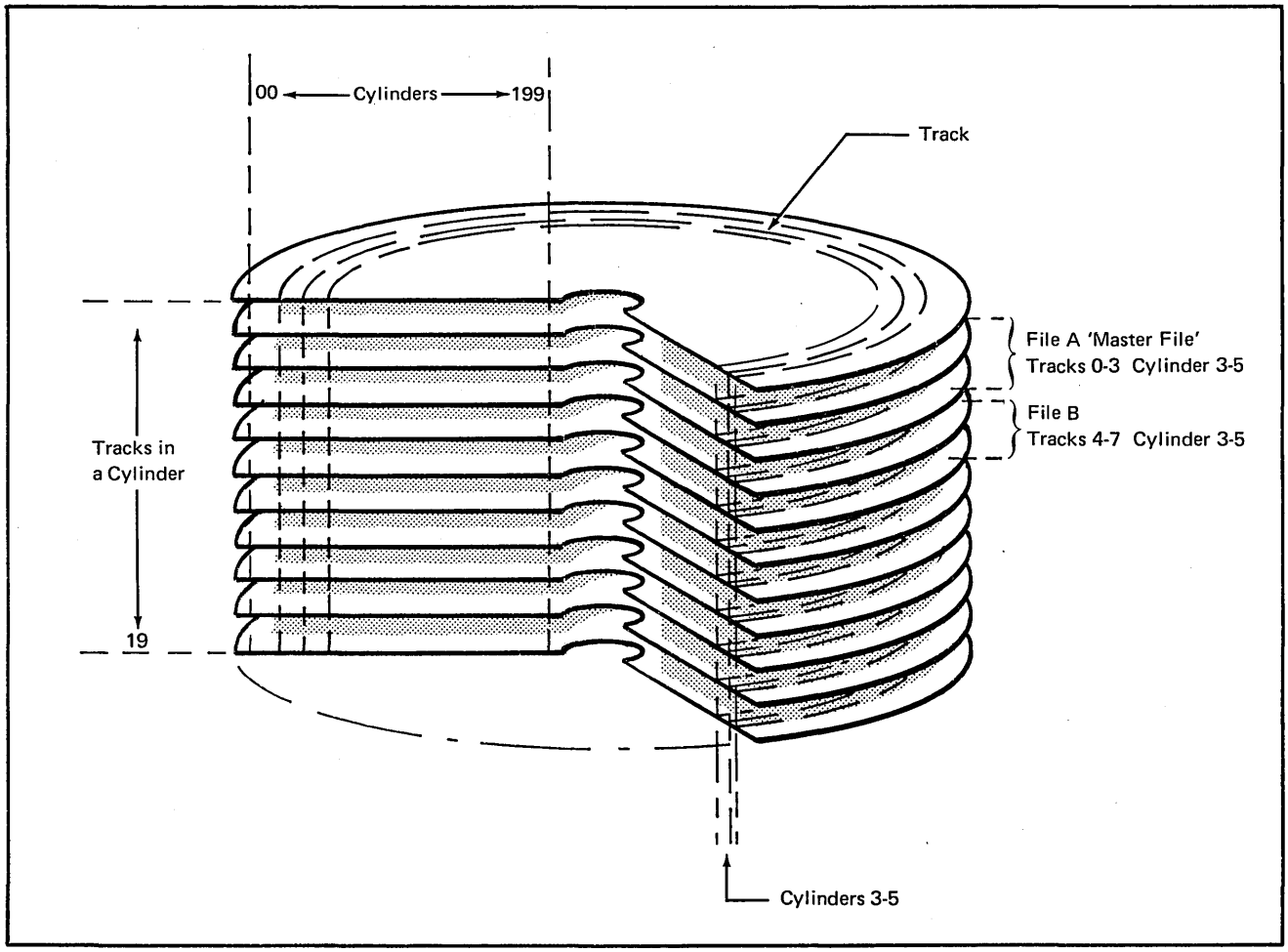

Figure 2. Track Allocation for Split Cylinder Files

OCL FILE STATEMENT

The OCL FILE statement provides information about disk files. Disk system management uses this information to read and write disk records for your programs. A FILE statement must be provided for each disk file used by your programs. This statement is the same statement that is used for the 5444. It must be contained within the set of OCL statements for each program using the 5445.

The keywords provided for the 5445 are summarized in Figure 3. These keyword parameters are permitted on the FILE statement in the description of 5445 files. Note that a blank in the right-hand column of the figure indicates no change in the function of the keyword parameters for the 5445. The following sections provide additional information about the keyword parameters.

Keyword Parameters for Single Volume Files

NAME: This parameter is required for the FILE statement. It gives disk system management the name that your program uses to refer to the file. The parameter must begin with one of the 29 alphabetic characters and may be followed by up to seven characters, not including the quote, comma, and blank.

PACK: This parameter is also required for the FILE statement. It tells disk system management the name of the disk pack that contains the file. The management routines check this name to ensure that it is the same as the name of the disk pack in the volume label of the pack being used. The parameter may consist of from one to six characters, not including the quote, comma, and blank.

UNIT: This parameter is the last parameter required for the FILE statement. It supplies the location of the disk pack that contains the file being referenced. Four possible codes indicate the location of the 5445 disk pack:

Code	Meaning
D1	5445 Drive one
D2	5445 Drive two
D3	5445 Drive three (Model 15 only)
D4	5445 Drive four (Model 15 only)

LABEL: This parameter refers to the filename which identifies the file in the VTOC (volume table of contents) on disk. This parameter is required only if the filename in a program differs from the filename on disk. If a new file is being created and the LABEL parameter is omitted, the filename from the NAME parameter is used.

DATE: This parameter is required when two or more files having the same name exist on a disk volume and a particular file is desired. The creation date of the desired file is coded in the DATE parameter. If two or more files with the same name exist on a disk volume and neither the date nor the location is given, the file having the latest creation date is selected. The date must be in the form (month-day-year or day-month-year) specified at system generation time. The date must be written as three two digit fields without punctuation, or three fields of one or two digits separated by punctuation. Any characters except numbers, quotes, commas, or blanks may be used as punctuation.

RETAIN: This parameter is optional and indicates the classification the file was given when it was created. The classifications are:

Code	Meaning
S	Scratch file
T	Temporary file
P	Permanent file
A	Reactivate scratch file (Model 10 only)

The file is assumed to be temporary if this parameter was omitted at file creation time.

If a file was created on the Model 10 as temporary or permanent but subsequently was changed to scratch by a new RETAIN parameter or the File Delete program, it can be accessed by using a retain code of A. A scratch file accessed in this way (RETAIN-A) will have its retain code changed to T by the system control program. Scratch files on the Model 15 are used only for the duration of one program; therefore, RETAIN-A is not supported.

KEYWORD	PARAMETER	List of Parameters Required for Multivolume Files	Required or Optional	Description of Function Provided for 5445 (Blank Indicates No Change for 5445)
NAME	filename	No	Required	
PACK	name	Yes	Required	
UNIT	code	Yes	Required	The codes D1 and D2 indicate the drive location of the disk pack for Model 10; the codes D1, D2, D3, and D4 indicate the drive location for Model 15
LABEL	filename	No	Optional	
DATE	date	No	Optional	
RETAIN	code	No	Optional	
RECORDS or TRACKS	number	Yes	Required for creating files	Required except for split cylinder files; cannot be used with split cylinder files
LOCATION	cylinder number	Yes	Optional	
	cylinder number/ track number	Yes	Optional	
	filename	No Must be used with single volume files only	Required	Required for split cylinder files other than the master file
SPLIT	tracks/cylinders	No Must be used with single volume files only	Required only for creating split cylinder files	Used with the first set of a file to be allocated
	tracks	No Must be used with single volume files only	Required only for creating split cylinder files	Used for succeeding files of the set
HIKEY	highest allowed key fields	Yes	Required only for loading or adding to an indexed multivolume file	

Figure 3. Description of the Parameters on the OCL FILE Statement for the IBM 5445 Disk Storage

RECORDS or TRACKS: One, but not both, of these parameters may appear in the FILE statement; one of them must appear for files being created. These parameters are not used for split cylinder files. They indicate the amount of disk space necessary for the file. If the file is being referenced, these parameters inform disk system management of the amount of space that was used for the file when it was created. The space requirement is specified as the number of records in the file (RECORDS) or as the number of disk tracks required (TRACKS). Two restrictions are applicable when defining the space requirement:

- If RECORDS is used, the number may be up to six digits long.
- If TRACKS is used, the number must be within the range 1 to 3980.

The RECORDS or TRACKS keyword parameters must not be used with split cylinder files.

LOCATION: This parameter is used to specify the cylinder and track on which the file is to start. This keyword parameter is optional. It may be used to specify the:

- Cylinder number
- Cylinder number/track number
- Filename

The filename entry is required for creating split cylinder files other than the master split cylinder file. The filename specified must be the name of the master file.

When you are accessing an existing file, the LOCATION keyword parameter must be identical to that used in creating the file. When you are creating a file, this parameter specifies the beginning position of the file.

When two or more files on a disk pack have the same filename, this keyword parameter can be used to identify the desired file.

The following restrictions apply when using the LOCATION keyword parameter:

- Cylinder 0 cannot be used; it is reserved for system use.
- The cylinder number specified must be between 1 and 199.
- The track number specified must be between 0 and 19.
- The track number must be 0 when this entry is used for the master split cylinder file.
- The cylinder number and track number, when specified together, must be separated by a slash.

SPLIT: This parameter is used only for the IBM 5445 Disk Storage. It is required for, and must be used only for, creating split cylinder files. The two parameters for this keyword are:

- Tracks/cylinders
- Tracks

The tracks/cylinders form of the SPLIT keyword parameter is specified when allocating the first of a set of files (master file). Tracks indicates the number of tracks per cylinder to be reserved for the first or master file. Cylinders indicates the number of cylinders necessary for the complete set of split cylinder files. By specifying SPLIT, you can use fewer than the maximum number of tracks on a cylinder for as many cylinders as you need for a particular file.

The tracks form of the SPLIT keyword parameter is specified for all succeeding files of the set of split cylinder files. The number of tracks specified indicates the number of tracks per cylinder to be reserved for the particular file.

Both the tracks/cylinders and tracks parameter formats require that the tracks and block length specified must be a value such that the first block is completely contained in the first cylinder.

These restrictions apply to the use of this keyword parameter:

- The SPLIT keyword must not appear in a FILE statement that has a RECORDS or TRACKS keyword parameter.
- The SPLIT keyword must not be used with multivolume or indexed files.
- The number of tracks specified must be from 1 through 19 and must not cause allocation beyond the last cylinder specified.
- The number of cylinders specified may be from 1 through 199.
- The total number of tracks specified per cylinder for a set of split cylinder files must not exceed 20.
- The tracks/cylinders form of the parameter must be separated by a slash.

Keyword Parameters for Multivolume Files

Files which exceed the capacity of one disk pack can be continued on one or more subsequent packs. Such files are known as multivolume files. 5445 multivolume file support requires that the entire file reside on 5445 disk packs. Files space on offline packs can be allocated for multivolume files (other than the initial volume) under two conditions:

- The packs are empty.
- TRACKS and LOCATION are specified and the TRACKS and LOCATION parameters for the offline packs describe available space.

The keyword parameters that require lists for multivolume files are: PACK, UNIT, TRACKS, RECORDS, LOCATION, and HIKEY. These parameters require lists to describe all of the packs containing the file. Certain rules must be followed when indicating the lists for these parameters:

- The lists must be enclosed in quotes.
- The items in the list must be separated by commas.
- The lists, except for HIKEY, must not contain blanks.

The functions of the keyword parameters have been explained (except the HIKEY parameter which is explained here); therefore, only the considerations for using the lists in these parameters are explained here.

PACK: The list for this parameter contains the names of the volumes in the order they are to be used.

UNIT: The list for this parameter may contain a maximum of two unit codes for 5445 files on the Model 10 and four unit codes for 5445 files on the Model 15. If two or more unit codes are given, the volumes must be mounted in the order indicated by the unit codes. If all the volumes are to be mounted on the same drive, only one unit code is given.

TRACKS or RECORDS: The list for these parameters indicates the amount of space occupied by the multivolume file. The numbers in the list must correspond to the order of the names listed in the PACK parameter.

LOCATION: The list for this parameter contains the cylinder number or cylinder number/track number parameter for the disk you use for the file. The parameters must correspond to the order of the names in the PACK parameter. If LOCATION is specified for one volume of a multivolume file, it must be specified for all the volumes of that file.

HIKEY: The HIKEY parameter is used only for multivolume indexed files. HIKEY limits the highest key field that can be put on each pack of a multivolume file. For example, in the following HIKEY parameter, three volumes are used: HIKEY-'JONES,NICOL,ZZZZZ'. The highest key field allowed on the first volume is JONES. This means that all the records beginning with A and including JONES will be on this volume. Since HIKEY parameters must be in ascending order, the next volume contains all of the records with keys following JONES and including NICOL. The last volume contains all the records with names that come after NICOL.

UTILITY PROGRAMS

Various utility programs are included with disk system management. These utility programs, resident on the 5444, perform a variety of functions, including preparing disks for use in reorganizing an indexed file or deleting files. Each of these programs is described separately in this section, following information on utility program halts and OCL statements.

Program Halts

On the Model 10 Disk System, utility program halts and messages are indicated by the message display unit and the system log device as described in the *IBM System/3 Model 10 Disk System Halt Guide,* GC21-7540.

On the Model 15, the CRT (cathode ray tube) indicates the messages for the utility programs as described in the *IBM SYSTEM/3 Model 15 System Messages,* GC21-5076.

OCL Statements

Each utility program requires a set of OCL statements. The first statement required within a set of OCL statements is the LOAD statement. It identifies the program to be run and indicates the disk from which the program will be loaded. The statement format used when loading a program from disk is:

```
// LOAD program name,unit
```

The program name in the LOAD statement specifies the utility program you want to run. The following list contains the utility programs described in this section and the name that must appear in the LOAD statement.

Program	Name
Disk Initialization	$INIT
Alternate Track Assignment	$ALT
Alternate Track Rebuild	$BUILD
File and Volume Label Display	$LABEL
File Delete	$DELET
Copy/Dump	$COPY
Dump/Restore	$DCOPY

The unit parameter specifies a code that describes the location of the system pack which contains the utility program. The codes are:

Code	Meaning
R1	Removable disk on 5444 drive 1
F1	Fixed disk on 5444 drive 1
R2	Removable disk on 5444 drive 2
F2	Fixed disk on 5444 drive 2

Another statement that is required for each utility program is the RUN statement. The format of this statement is:

```
//RUN
```

The program begins after the system reads this statement.

END Statement

The final statement required for each utility program is the END statement. The format of the statement is:

```
// END
```

This statement requires no parameters and is the last statement required for a program.

Utility Control Statement Formats

The formats of utility control statements are illustrated using the conventions explained in Figure 4.

```
//FUNCTION KEYWORD-PARAMETER, { Choose One of These } [,Optional ]
                                                    [,Assumed  ]

KEYWORD-PARAMETER entries can appear in any order.

BRACES { } indicate a choice of entries.

BRACKETS [ ] indicate an optional entry.

UNDERSCORE in an optional entry means that the underscored
           value is assumed if the entry is not present in
           the statement.

HYPHENS separate keywords and parameters.

COMMAS separate all entries.

SPECIAL CHARACTERS such as // must appear as they are
           shown in the statement format.

WORDS OR ABBREVIATIONS IN CAPITAL LETTERS, such as
           UIN and ALT, must appear as shown in the
           statement format.

SMALL LETTERS, such as yyy and mn, represent numbers or
           other information you must supply. The number
           of letters indicates the number of characters in the
           information or the number of digits in the numbers.
           Three dots, as in x . . . x, indicates that the number
           of characters or digits may vary.
```

Figure 4. Conventions Utilized for Illustrating Statement Formats

Program Descriptions

The following utility program descriptions contain information about functions of the utility programs which are applicable to the 5445 and the specifications required to use the programs. Examples of coding are not given in this manual.

The following utility programs are also described in the *IBM System/3 Model 10 Disk System Control Programming Reference Manual,* GC21-7512, and *IBM System/3 Model 15 System Control Programming Reference Manual,* GC21-5077.

Disk Initialization Program

All disk packs used by programs processed under disk system management must be initialized. The Disk Initialization program has the capacity to initialize packs on both 5444 and 5445 disk drives.

The following functions are provided by this utility program:

1. Performs a complete surface analysis of the pack to determine if the pack is usable and whether it contains any defective tracks
2. Assigns alternate tracks for defective tracks when the pack is usable
3. Initializes the volume label in cylinder 0, track 0, record 3
4. Initializes the System/360 VTOC in cylinder 0
5. Initializes all other tracks to 256 byte records

The control statements required for this utility program to initialize a disk pack are shown in Figure 5. The following numbered list corresponds to the numbered items in the figure.

1. The UNIT keyword parameter specifies the location of the disk pack you want to initialize. Any combination of a maximum of five drives may be specified for the Model 10 and seven drives may be specified for the Model 15.

   The codes indicate the locations of the disk packs:

Code	Meaning
R1	Removable disk on 5444 drive 1
F1	Fixed disk on 5444 drive 1
R2	Removable disk on 5444 drive 2
F2	Fixed disk on 5444 drive 2
D1	5445 drive 1
D2	5445 drive 2
D3	5445 drive 3 (Model 15 only)
D4	5445 drive 4 (Model 15 only)

2. The TYPE keyword parameter specifies the type of initialization performed. The optional parameters are:

   PRIMARY—The disk pack will be initialized only if there are no active files on the pack.

   SECONDARY—Used with 5444 only.

   CLEAR—The disk pack is initialized without checking for active files.

```
                          { R1 }
// LOAD      $INIT,       { F1 }
                          { R2 }
                          { F2 }

// RUN
          (1)                (2)                (3)                (4)
// UIN   UNIT-  { mn        },TYPE-  { PRIMARY   }  [,ERASE -  { YES }]  [,VERIFY-nnn]
                { mn,...,mn }        { SECONDARY }                { NO  }
                                     { CLEAR     }

          (5)          (6)          (7)
// VOL   PACK-xxxx   [,ID-x...x]  [,NAME360-x...x]
```

Note: One VOL statement for each unit specified in the UNIT parameter of the UIN statement.

```
// END
```

Figure 5. Specifications Required for the Disk Initialization Program

3. The optional ERASE keyword parameter applies to disk packs that have already been initialized. It tests for defective tracks. When the NO option is specified, all tracks except the defective tracks are retested. When the YES option is specified, all tracks, including defective tracks, are retested. If this parameter is omitted from the statement, the NO option is assumed.

4. The VERIFY parameter is optional. It indicates the number of times (from 1 to 255) the program will perform surface analysis before determining the validity of a track. Tracks that cause errors any time during the test are considered defective and will have alternate tracks assigned to them. The test is performed once if the parameter is omitted from the statement.

5. The PACK keyword parameter entry on the VOL statement provides a pack name of up to six characters which is placed in the volume label.

6. The optional ID entry further identifies the disk pack. It is used as additional identification of the disk. The identification consists of up to ten characters that, if specified, are placed in the volume label.

7. The optional NAME360 parameter provides a filename which is placed in the System/360 Data Set Control Blcok (DSCB). If this parameter is not used, the default name SYSTEM/3.DATA is used.

   The name you provide must conform to the OS/360 naming conventions. The filename may consist of one name or a series of names separated by periods. The first character must be alphabetic and the name may be from one to eight alphameric characters long, excluding the dash (—), asterisk (*), quote ('), or period (.).

   The special character period (.) separates a series of names in a filename. The length of the filename must not exceed 44 characters including all names and periods.

Alternate Track Assignment Program

An alternate track is a substitute track selected to accept the contents of a defective track. Sixty alternate tracks are available on the 5445 disk packs. The Alternate Track Assignment program can replace the contents of any track except tracks 0, 1, or an alternate track. Thereafter, anytime a program attempts to use a track that has been assigned an alternate, the alternate will be used automatically instead.

The three conditions for using this program depend on the function to be performed.

- Conditional assignment
- Unconditional assignment
- Unconditional release

The conditions are described through parameters on the utility control statement.

The conditional assignment tests tracks suspected of causing errors. If the track is defective, an alternate track is assigned. The unconditional assignment assigns alternates for a specified number of tracks, whether they are defective or not. Unconditional release frees an alternate track making it available for future use.

When programs encounter reading or writing errors, the system automatically halts the current operation. Some of the data might not be recovered when the Alternate Track Assignment program is used. If the data cannot be recovered without an error condition, the record or records are read under reduced hardware checking conditions and are written on the alternate track. The record or records that contain the error are printed in a form that completely identifies the data written on the alternate tracks. This printout should be retained. It is required for running the Alternate Track Rebuild program.

The control statements required for the Alternate Track Assignment program are shown in Figure 6. The following numbered list corresponds to the numbered items in the figure.

1. The ALT statement is required for each disk pack processed during the current run. There may be a maximum of six ALT statements.

2. The PACK parameter identifies the disk pack containing the defective tracks. The name used is the name assigned by the Disk Initialization program. This disk pack must be online when the Alternate Track Assignment program is run.

3. The UNIT parameter indicates the location of the disk pack containing the defective track. The D1, D2, D3, and D4 unit codes apply to the IBM 5445 Disk Storage drive.

4. The VERIFY parameter is optional and specifies the number of times surface analysis is to be performed on a suspected defective track. The number specified may be from 1 to 255, or the parameter may be omitted and surface analysis will be performed once.

   If this parameter is used along with the ASSIGN or UNASSIGN parameter, it affects only the conditional assignment of defective tracks, those tracks not specified by the ASSIGN or UNASSIGN parameters. Conditional assignment is performed after any forced assignments.

5. The ASSIGN parameter applies to unconditional assignment of alternate tracks. It indicates which tracks should be assigned alternate tracks. A list of up to six track numbers may follow the parameter; each track listed is assigned an alternate track.

6. The UNASSIGN parameter applies to the unconditional release of alternate tracks. The program cancels the assignment of the alternate tracks that are listed on the parameter. A maximum of six assignments may be canceled.

Alternate Track Rebuild Program

The Alternate Track Rebuild program allows you to correct data that could not be transferred correctly to an alternate track. The information received from the Alternate Track Assignment program gives the name of the disk and the numbers of the track and sectors suspected of containing incorrect data and is used for writing control statements for this program. A number of alternate tracks may be corrected during one program run. When correcting alternate tracks, be sure that the defective track has been assigned an alternate before modifying the data on that track. The program reads each set of statements and moves the corrected data into its proper location within a sector. Remember, these corrections are actually made on an alternate track.

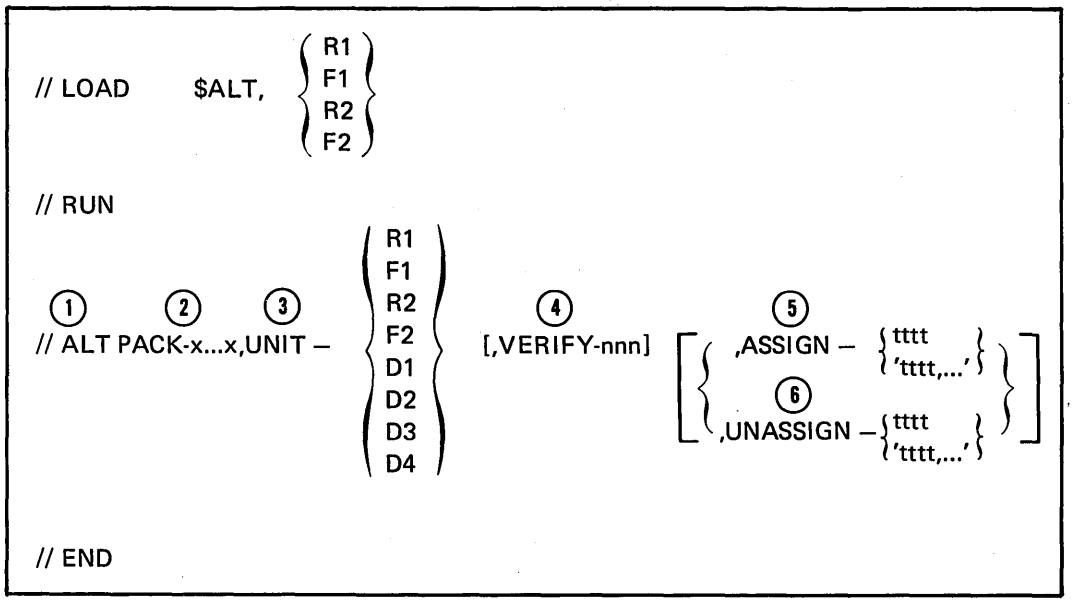

Figure 6. Specifications Required for the Alternate Track Assignment Program

The control statements required for this utility program to build alternate tracks are shown in Figure 7. The following numbered list corresponds to the numbered items in the figure.

1. The REBUILD statement specifies:

   - The name and location of the disk pack being corrected.
   - The original track and sector address where the correction is to be made.
   - The location and number of characters to be replaced in the sector.

   This control statement is required for each sector being changed and must be followed by one or more data statements.

2. The PACK parameter indicates the name of the disk pack that contains the alternate track being modified. This is the name assigned to the pack by the Disk Initialization program.

3. The UNIT parameter indicates the drive on which the disk pack, specified by the PACK parameter, will be mounted. The D1, D2, D3, and D4 unit codes indicate the IBM 5445 Disk Storage drive.

4. The TRACK parameter refers to the defective track and sector that contains the data being corrected. Six characters refer to this location, the first four characters identify the track number and the last two characters identify the record number.

5. The LENGTH parameter indicates the number of characters that must be modified in the specified record. The length specified must be in multiples of 2 and can range from 2 through 256, the maximum capacity of a sector. The length applies to characters that occupy consecutive positions in the sector. If the characters occupy nonconsecutive positions, either replace all intervening characters or use more than one REBUILD statement.

6. The DISP parameter indicates the position in the sector of the first byte of data being replaced. Starting at the position indicated, the program replaces the number of characters specified in the LENGTH parameter. The position of the first character is 1, the position of the second is 2; and so forth. The maximum DISP specification is 255. When the modified record uses a key, the key is considered part of the data area in calculating the displacement.

7. The data statements contain the information to be placed on the specified record. Replacement characters are entered on the data statements in hexadecimal form. The disk records are updated, two bytes at a time, by the pairs of hexadecimal characters. Pairs of characters on the data statements must be separated by commas. When more than one statement is used, the last entry on all except the last data statement, must be a comma. The first blank entry indicates the last entry for all data statements. A maximum of 127 data statements can be entered with one program run.

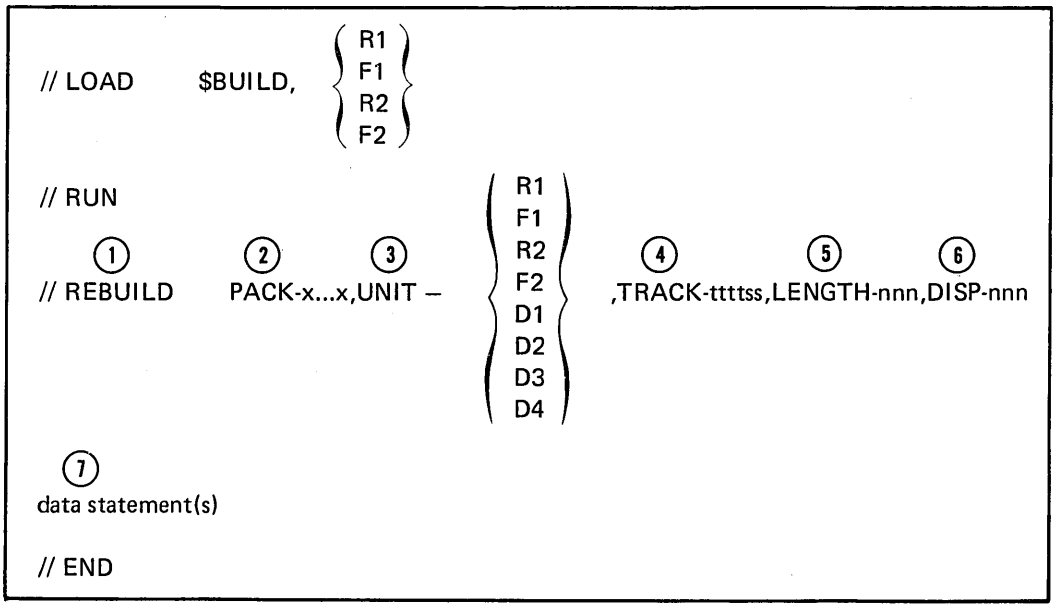

Figure 7. Specifications Required for the Alternate Track Rebuild Program

File and Volume Label Display Program

The File and Volume Label Display program can be used to print specific file information in readable format. This utility program performs the following functions:

- Displays the VTOC information for any specified filename on a given disk pack.
- Displays the VTOC information for all files in the VTOC.
- Displays the status of the disk pack on any specified unit including the number of available alternate tracks and the size and location of available space on the pack.
- Displays a message when the track usage information for the pack does not match the track usage indicated by VTOC entries (Model 15 only).

The control statements required for this utility program are shown in Figure 8. The following numbered list corresponds to the numbered items in the figure.

1. The DISPLAY statement is required.

2. The UNIT parameter specifies the drive which contains the disk pack containing the volume information to be printed. The D1, D2, D3, and D4 unit codes are used to specify the 5445.

3. The LABEL parameter indicates the information to be printed from the specified unit. If VTOC is specified on this parameter, all the volume information is printed. The meaning of the VTOC contents is explained in the *IBM System/3 Model 10 Disk System Control Programming Reference Manual,* GC21-7512, and the *IBM System/3 Model 15 System Control Programming Reference Manual,* GC21-5077. The VTOC is counted as one filename.

   If a filename or several filenames are specified for this parameter, only the VTOC information for the specified files is printed. A maximum of 20 filenames may be listed for one program run.

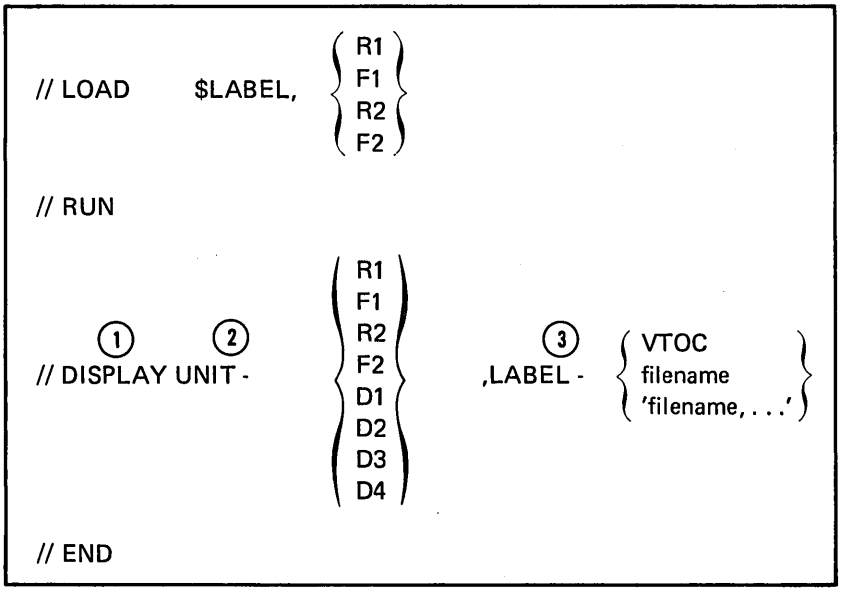

Figure 8. Specifications Required for the File and Volume Label Display Program

File Delete Program

The File Delete program frees space on disk packs, making it available for other files. Space can also be made available by changing the OCL retain attributes to S (scratch) when using the file.

This program frees space for a single file or for all files on a disk pack by removing the files from the System/3 VTOC. The contents of the files are then unrecoverable.

The control statements required for this utility program are shown in Figure 9. The following numbered list corresponds to the numbered items in the figure.

1. Either the SCRATCH or REMOVE statement must be specified depending on the operation to be performed. The SCRATCH statement specifies a file whose retain code is changed to S (scratch). On the Model 10, the entry remains in the System/3 VTOC although the space on the pack is considered available for other files. On the Model 15, the SCRATCH statement is treated as a REMOVE statement. The REMOVE statement adds space to the existing available space on the pack and removes the file entry from the System/3 VTOC.

2. The PACK parameter indicates the name of the disk pack that contains the file being deleted. This is the name assigned to the pack by the Disk Initialization program.

3. The UNIT parameter indicates the drive on which the disk pack, specified in the PACK parameter, is mounted. The D1, D2, D3, and D4 unit codes specify the 5445 drives.

4. The LABEL parameter identifies the files to be deleted and is expressed by one of three parameters. VTOC indicates that all files on the volume are to be deleted. Filename indicates that only the specified file is to be deleted. More than one filename may be specified if multiple files are to be deleted. A maximum of 50 files may be deleted during one run.

5. The DATE parameter identifies a particular file to be deleted when more than one file of the same name is specified on the LABEL parameter. If the DATE parameter is omitted and there are several files with the same name, all of the files are deleted.

6. The DATA parameter may be used only with the REMOVE control statement. If the YES option is selected, the data is removed from the file. If the NO option is selected, or if the parameter is omitted, the data is not removed from the file.

7. The FORMAT statement (Model 15 only) is used when a system failure or an inadvertent re-IPL may have left space allocated, but not utilized, on the disk. The FORMAT statement frees this allocated space.

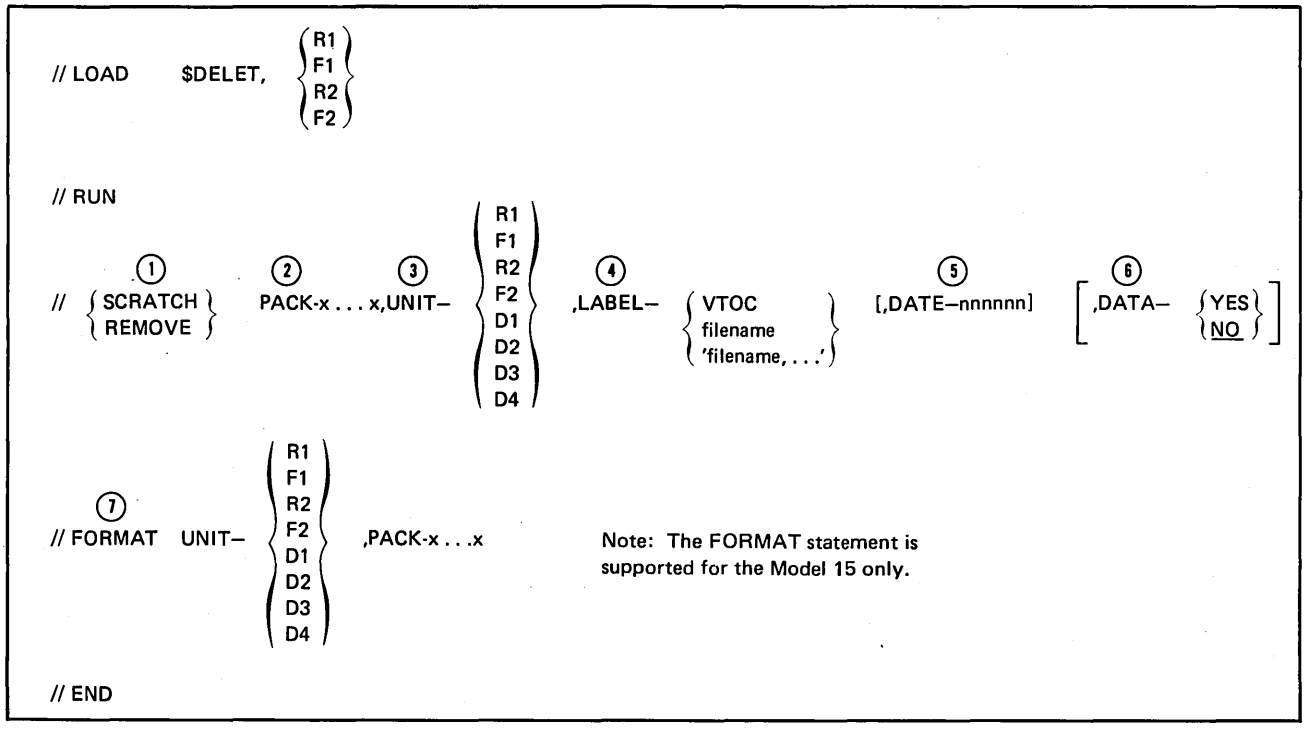

Figure 9. Specifications Required for the File Delete Program

Copy/Dump Program

The functions that the Copy/Dump program performs for the 5445 are similar to the functions it performs for the 5444. However, when using 5445 drives on your system, a *pack* cannot be copied from a pack on one drive to another pack on the same drive. The functions performed by the program are:

- Copy an entire pack to another pack of the same type
- Copy a data file to another pack or to another location on the same pack
- Copy and reorganize an indexed file
- Copy a file and delete specified records from it
- Print all or part of a disk file whether it is being copied to another disk file or not
- Print selected records from a disk file based on either the relative record number or a key value

Note: For the Model 15, D3 and D4 can also be specified. The additional functions provided are:

- Copy a file to or from magnetic tape
- Copy a sequential file to an indexed file
- Copy a file to or from cards
- Copy a pack from R1 to R1 with work space on a 5445
- Copy part of a file to or from tape, disk, or cards

The control statements and parameters required for this utility program to function are shown in Figure 10. A complete summary and explanation of the control statements and their parameters is contained in the *IBM System/3 Model 10 Disk System Control Programming Reference Manual,* GC21-7512 and the *IBM System/3 Model 15 System Control Programming Reference Manual,* GC21-5077. The following numbered list corresponds to the numbered items in the figure.

1. These FILE statements identify the input and output files. The FILE statement COPYIN is required for all COPYFILE jobs. The FILE statement COPYO is only required if the output option on the COPYFILE statement is DISK, FILE or BOTH. The FILE statement COPYP is used to print on the 3284 printer (Model 15 only). FILE statements are not required for a COPYPACK run.

2. The COPYPACK statement indicates that the content of one disk pack is to be transferred to another. The FROM parameter identifies the location of the disk pack being copied. The TO parameter identifies the location of the disk pack receiving the data. The FROM disk pack is copied track for track except for the pack ID, the alternate track information, and error logging information. The two drives specified must be either both 5444 or both 5445 drives.

3. The optional PACKIN parameter identifies the disk to be copied. This parameter is provided to check the pack ID to verify that the correct pack is mounted.

4. The optional PACKO parameter identifies the output disk. This parameter is provided to check the pack ID to verify that the correct pack is mounted.

5. The optional WORK parameter indicates where the work area is located, if a pack is copied from R1 to R1. This parameter is not supported on the Model 10.

6. The COPYFILE statement indicates that one file is to be copied to another location. Its parameters specify the type of copy performed.

7. The OUTPUT and OUTPTX parameters indicate that the file is to be copied, printed, or both. When the disks are being copied, the FROM and TO files are specified as COPYIN and COPYO respectively. The OUTPTX parameter causes the output to be printed in hexadecimal values.

8. The optional DELETE and OMIT parameters identify records for deletion from the file by giving the identifying character and its position in the record. Position (p) is the position of the character in the records. The position specified must be less than the record length. Character (c) is the character that identifies the records. If the DELETE parameter is used, the deleted records are printed. If the OMIT parameter is used, the deleted records are not printed. If neither parameter is used, all of the records in the input file are copied.

9. The optional REORG parameter permits reorganization of the file as it is being copied. The YES option applies only to indexed files. If the YES option is specified, the output file is reorganized putting the records in ascending order by their key fields. If the NO option is specified, or if the entry is not included, either the file is not an indexed file or the records in the output file have the same sequence as in the input file. In either case, the input file is not affected.

10. The optional WORK parameter indicates whether or not to use a work area. The assumption is NO if the parameter is omitted. If YES is specified, the COPYIN file and the COPYO file are on different packs that are to be mounted on the same drive, either drive R1 or D1 only.

11. The optional SELECT statement controls the printed output. If the SELECT statement is not specified, and if the OUTPUT parameter on the COPYFILE statement is PRINT or BOTH, all the records are printed. On the Model 15, a selected portion of the input (COPYIN) file is copied to the output (COPYO) file by coding FILE-YES.

12. The RECORD parameters use relative record numbers to identify the records to be printed or copied. Relative record numbers identify a record's location in the file with respect to other records in the file. The FROM parameter specifies the first record to be printed or copied. The TO parameter indicates the last relative record number to be printed or copied. The program assumes that the number of the last record in the file is the TO number if the TO parameter is omitted.

The KEY and PKY parameters apply to printing or copying part of an indexed file. The FROM parameter gives the key of the first record to be printed or copied. The TO parameter gives the key of the last record to be printed or copied. The program assumes that the last key in the index is the TO key if the TO parameter is omitted. The records printed or copied are those which have keys between or equal to the FROM and TO limits. The PKY parameter applies to an indexed file containing packed keys.

13. The optional FILE parameter allows only selected records to be copied to a disk or tape as well as to a printer. If FILE-YES is specified, selected records are copied to the files named in the COPYO FILE statement. OUTPUT-BOTH or OUTPUT-PRINT must be specified if FILE-NO is specified. If OUTPUT-BOTH is specified, selected records are printed and the entire file is copied to the file named in the COPYO FILE statement. If OUTPUT-PRINT is specified, selected records are printed only. This parameter is not supported on the Model 10.

14. The optional KEY statement is used to create an indexed disk file from a sequential file. LENGTH and LOCATION specify the key length and start location of the key in the record.

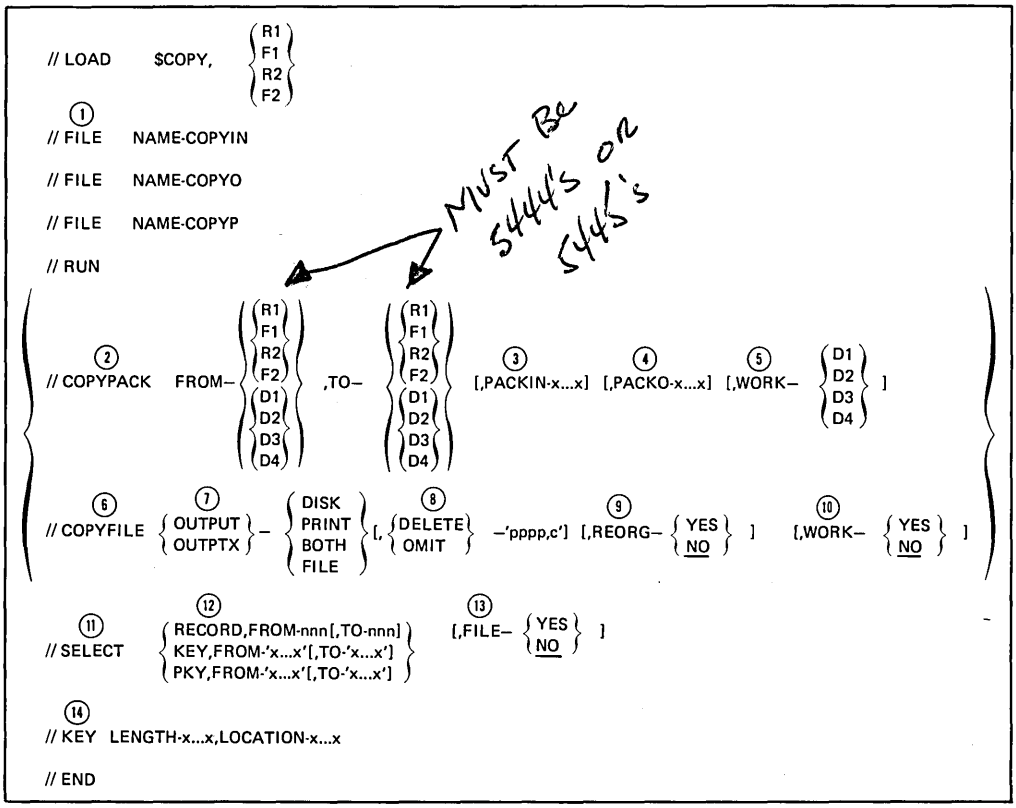

Figure 10. Specifications Required for the Copy/Dump Program

Dump/Restore Program

By using the Dump/Restore program, you can copy the entire contents of a 5445 disk pack to magnetic tape for backup. The disk can, at any time, be restored to its original contents by transferring information back from the tape.

The control statements and parameters required for this utility program to function are shown in Figure 11. The following numbered list corresponds to the numbered items in the figure.

1. This FILE statement identifies the tape file used as a backup copy in case something happens to the information on the disk. The name of the tape must be BACKUP.

2. The COPYPACK statement indicates that the contents of one disk pack are to be transferred to tape or are to be restored from tape. The FROM parameter indicates the location of the disk pack being copied. The TO parameter indicates the location of the disk pack receiving the copy. The PACK parameter indicates the name of the disk pack being used.

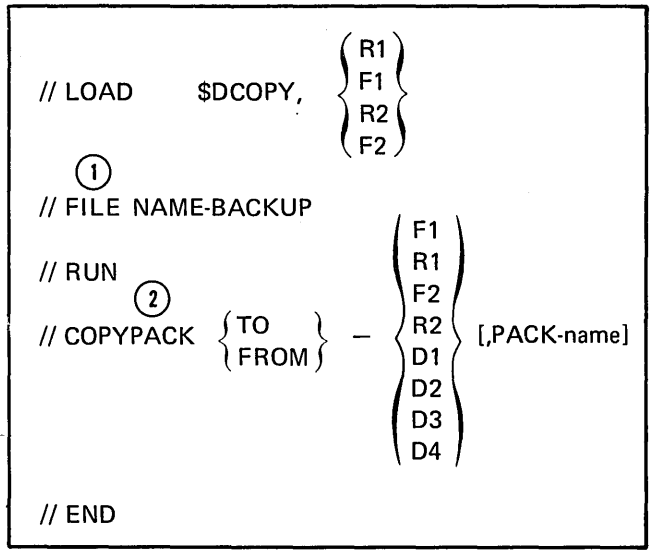

Figure 11. Specifications Required for the Dump/Restore Program

RPG II

RPG II can be used to process data files on the IBM 5445 Disk Storage.

RPG II consists of a symbolic programming language and a compiler program. The source program statements are written by the programmer on special coding forms.

The File Description Specifications define the control information and device entry for the 5445 to the RPG II compiler. Columns 40-46 of this form identify the input/output device for the file. The 5445 data files may be referenced by specifying DISK45 in those columns. For Model 15, device independent data management can be used. If device independent data management is used, the device name is left blank. At execution time, you can assign the files to a 5445. Other valid and consistent entries on the form have the same functional characteristics for the 5445 files as are stated for 5444 files.

Only data files are supported for the 5445. The file organizations supported by RPG II are sequential, direct, and indexed.

RPG II support operates under control of the IBM System/3 Model 10 Disk System or Model 15 system control programs. The IBM System/3 Model 10 Disk RPG II (Program Number 5702-RG1) is a prerequisite for the RPG II 5445 Disk Storage feature (Feature Numbers 6012/6014); Model 15 RPG II (Program Number 5704-RG1) includes 5445 support.

DISK SORT

The input, output, and work files used with Disk Sort can be resident on the IBM 5445 Disk Storage. These files can be explained in relation to the Disk Sort program.

The Disk Sort program is divided into two phases. The generation phase reads the sequence specifications into main storage and uses the information to generate an object program called the select/build routine. The execution phase uses this routine to select records from an input file to format work records on the work file, and to create a sorted output file.

The sequence specifications read by the generation phase identify the job and records for the Disk Sort program. The three types of sequence specifications are the header, the record type, and the field specifications. An explanation of these specifications, used on special coding sheets, is contained in *IBM System/3 Disk Sort Reference Manual,* SC21-7522.

During the sorting process, the Disk Sort program requires three files: input, output, and work. The input file contains the records to be sorted. The output file contains the sorted file. The work file is an area on disk which is set aside as a work area. If the work file is a multivolume file, all of the files must be online. The location of these three files is described on the OCL FILE statement. The parameters for the FILE statement are described in Chapter 2 of this manual. The location of the work file can also be determined automatically. For the Model 15, directed 5445 automatic work file allocation uses the // SWITCH statement to determine the location of the work file. See the *IBM System/3 Disk Sort Reference Manual,* SC21-7522, for how the // SWITCH statement is used.

The Disk Sort program creates three types of files. These types are the sorted sequential file (tag-along sort), the sorted record address file (addrout sort), and the summary tag-along sort file. The sorted files may be single or multivolume disk files. They are kept on disk and may be used later by other programs.

The Disk Sort program operates under control of the IBM System/3 Model 10 Disk System or Model 15 system control programs. The IBM System/3 Model 10 Disk Sort program (Program Number 5702-SM1) is a prerequisite for the Disk Sort 5445 Disk Storage feature (Feature Numbers 6008/6010). The Model 15 Disk Sort program (Program Number 5704-SM1) includes 5445 support.

SUBSET ANS COBOL

By using the Subset ANS COBOL Compiler and Library program product, you can process data files on the 5445. COBOL language characteristics are the same for 5445 files as for 5444 files. You identify the 5445 via the ASSIGN clause. The file organizations supported for COBOL are sequential, indexed, and direct.

For Model 15, work files for the compiler can reside on the 5445.

Subset ANS COBOL for the Model 10 Disk System (Program Number 5702-CB1) operates under control of the IBM System/3 Model 10 system control programs. The Model 15 COBOL (Program Number 5704-CB1) operates under control of the IBM System/3 Model 15 system control programs.

FORTRAN IV

The FORTRAN IV program is another IBM program product that supports the 5445. Support for the 5445 is functionally identical to that provided for the 5444.

For Model 15, work files for the compiler can reside on the 5445.

FORTRAN IV for the Model 10 Disk System (Program Number 5702-FO1) operates under control of the IBM System/3 Model 10 Disk system control programs. On the Model 15, FORTRAN IV (Program Number 5704-FO1) operates under control of the IBM System/3 Model 15 system control programs.

MAGNETIC CHARACTER READER UTILITY PROGRAM (Model 10 Only)

The IBM System/3 Model 10 Disk System 1255 Magnetic Character Reader Utility program (Program Number 5702-UT2) supports the IBM 5445 Disk Storage by making possible the same functions it makes possible for the 5444. Chapter 2 of this manual contains the OCL considerations for 5445 support. No change in coding is required in the 1255 utility program specifications. This program is available only for the Model 10. (For the Model 15, an SCP subroutine is available for use with RPG II or assembler object programs to support the 1255.

BASIC ASSEMBLER

By using the Model 10 and Model 15 Basic Assembler, you can write assembler language programs that support the 5445.

System macro instructions are available with the SCP to simplify coding required by the assembler. Macros perform the following functions for the 5445:

- Build a preopen DTF for disk GET and PUT operations and assign its offsets
- Build an input/output block (IOB) for disk read/write operations and assign its offsets
- Build the interfaces required to get input records from a disk device via a GET or a READ operation
- Build the interfaces required to put output records to a disk device via a PUT or a WRITE operation

See the *IBM System/3 Model 10 Disk System Control Programming Macros Reference Manual,* GC21-7562, or the *IBM System/3 Model 15 System Control Programming Macros Reference Manual,* GC21-7608.

Chapter 4. Compatibility

Disk files created on the 5445 can be read and updated using a System/360-System/370. Conversely disk files can be created using a System/360-System/370 and subsequently read or updated with the System/3 Model 10 Disk System or Model 15. However, the System/360-System/370 program used to create the disk file must be written at the EXCP level.

The volume label and VTOC identify the information contained on the 5445 disk pack. The volume label identifies the volume and points to the System/360-System/370 VTOC. The System/360-System/370 VTOC contains one label record which describes the complete pack as one System/360-System/370 file. The System/3 VTOC resides in a fixed location within this System/360-System/370 file and can be examined by the System/360-System/370 program.

SYSTEM/3 TO SYSTEM/360-SYSTEM/370

The System/3 Disk Initialization program writes a volume label in the System/360-System/370 format on every disk pack. The System/3 disk format consists of 256-byte physical records. This record length may be altered for System/360-System/370 VTOC records.

When creating a file to be used by System/360-System/370, System/3 may use any of the access methods previously listed. The logical records in a particular System/3 file can be accessed by System/360-System/370 by means of a user program using the sequential access method if the user program:

- Locates the file label in the System/3 VTOC for the desired file
- Uses the start of data information and record length information from the System/3 VTOC to perform the accessing and logical deblocking
- Uses the end-of-file information from the System/3 VTOC

SYSTEM/360-SYSTEM/370 TO SYSTEM/3

Volumes created on System/360-System/370 can be processed on System/3 if System/360-System/370 provides a System/3 VTOC entry and writes 256-byte physical records, in which case a System/3 user program or utility can then read and unblock the file according to the information in the System/360-System/370 file label.

// ALT statement 12
// COPYFILE statement 16, 17
// COPYPACK statement
  copy/dump program 16, 17
  dump/restore program 18
// DISPLAY statement 14
// END statement 9
// FILE statement
  multivolume files 8
  single volume files 5
  summary of parameters 6
// FORMAT statement 15
// KEY statement 17
// LOAD statement 9
// REBUILD statement 13
// REMOVE statement 15
// RUN statement 9
// SCRATCH statement 15
// SELECT KEY statement 17
// SELECT PKY statement 17
// SELECT RECORD statement 17
// UIN statement 10
// VOL statement 10

access methods 3
access times 1
ALT statement 12
alternate track assignment program 11
  control statements 12
alternate track rebuild program 12
  control statements 13
ASSIGN parameter (// ALT statement) 12

basic assembler 20

coding conventions for control statements 9
compatibility
  System/3 to System/360-System/370 21
  System/360-System/370 to System/3 21
copy/dump program 16
  control statements 16, 17
COPYFILE statement 16, 17
COPYPACK statement
  copy/dump 16, 17
  dump/restore 18

DATA parameter (// REMOVE statement) 15
DATE parameter
  // FILE statement 5
    summary 6
  // REMOVE statement 15
  // SCRATCH statement 15
DELETE parameter (// COPYFILE statement) 16, 17
disk initialization program 10
  control statements 10
disk organization 1
disk sort 2, 19
DISP parameter (// REBUILD statement) 13
DISPLAY statement 14
DPF restrictions 3
dump/restore program 18
  control statements 18

END statement 9
ERASE parameter (// UIN statement) 10, 11

file and volume label display program 14
  control statements 14
file capacity
  Model 10 1
  Model 15 1
file delete program 15
  control statements 15
file organization 3
FILE parameter
  // SELECT KEY statement 17
  // SELECT PKY statement 17
  // SELECT RECORD statement 17
FILE statement
  multivolume files 8
  single volume files 5
  summary 6
FORMAT statement 15
FORTRAN IV 20
FROM parameter
  // COPYPACK statement
    copy/dump program 16, 17
    dump/restore program 18
  // SELECT KEY statement 17
  // SELECT PKY statement 17
  // SELECT RECORD statement 17

HIKEY parameter (// FILE statement) 8
summary 6

ID parameter (// VOL statement) 10, 11

KEY statement 17

LABEL parameter
// DISPLAY statement 14
// FILE statement 5
summary 6
// REMOVE statement 15
// SCRATCH statement 15
LENGTH parameter
// KEY statement 17
// REBUILD statement 13
LOAD statement 9
LOCATION parameter
// FILE statement
multivolume files 8
single volume files 7
summary 6
// KEY statement 17

minimum configuration
Model 10 1
Model 15 1
multiprogramming restrictions 3

NAME parameter (// FILE statement) 5
summary 6
NAME 360 parameter (// VOL statement) 10, 11

OCL statements
// FILE statement 5
// LOAD statement 9
// RUN statement 9
OMIT parameter (// COPYFILE statement) 17
OUTPTX parameter (// COPYFILE statement) 17
OUTPUT parameter (// COPYFILE statement) 17

PACK parameter
// ALT statement 12
// COPYPACK statement 18
// FILE statement
multivolume files 8
single volume files 5
summary 6
// FORMAT statement 15
// REBUILD statement 13
// REMOVE statement 15
// SCRATCH statement 15
// VOL statement 10, 11
PACKIN parameter (// COPYPACK statement) 16, 17
PACKO parameter (// COPYPACK statement) 16, 17
program halts 9
program product support 19
basic assembler 20
disk sort 2, 19
FORTRAN IV 20
RPG II 2, 19
subset ANS COBOL 20
1255 20
programming considerations and attractions
Model 10 1
Model 15 2

REBUILD statement 13
RECORDS parameter (// FILE statement)
multivolume files 8
single volume files 7
summary 6
REMOVE statement 15
REORG parameter (// COPYFILE statement) 16, 17
RETAIN parameter (// FILE statement) 5
summary 6
RPG II 2, 19
RUN statement 9

SCRATCH statement 15
SELECT KEY statement 17
SELECT PKY statement 17
SELECT RECORD statement 17
split cylinder files 2
support 4
track allocation 4
SPLIT parameter (// FILE statement) 7
summary 6
storage available 1
subset ANS COBOL 20
summary of FILE statement parameters 6
system support 3

TO parameter
// COPYPACK statement
copy/dump program 16, 17
dump/restore program 18
// SELECT KEY statement 17
// SELECT PKY statement 17
// SELECT RECORD statement 17
track allocation for split cylinder files 4
TRACK parameter (// REBUILD statement) 13
TRACKS parameter (// FILE statement)
multivolume files 8
single volume files 7
summary 6
TYPE parameter (// UIN statement) 10

UIN statement 10
UNASSIGN parameter (// ALT statement) 12
UNIT parameter
// ALT statement 12
// DISPLAY statement 14
// FILE statement
multivolume files 8
single volume files 5
summary 6
// FORMAT statement 15
// REBUILD statement 13
// REMOVE statement 15
// SCRATCH statement 15
// UIN statement 10
utility programs 2, 8
alternate track assignment 11
alternate track rebuild 12
copy/dump 16
disk initialization 10
dump/restore 18
file delete 15
file and volume label display 14
OCL to load utility programs 9

VERIFY parameter
// ALT statement 12
// UIN statement 10, 11
VOL statement 10

WORK parameter (// COPYFILE statement) 16, 17

1255 magnetic character reader utility program 20

S/3 5445 Disk Storage Program Planning (File No. S3-34) Printed in U.S.A. GC21-5039-1

International Business Machines Corporation
General Systems Division
875 Johnson Ferry Road N. E.
Atlanta, Ga. 30342
(USA Only)

IBM World Trade Corporation
821 United Nations Plaza, New York, New York 10017
(International)

READER'S COMMENT FORM

IBM System/3
5445 Disk Storage
Program Planning Manual

GC21-5039-1

YOUR COMMENTS, PLEASE . . .

Your comments assist us in improving the usefulness of our publications; they are an important part of the input used in preparing updates to the publications. All comments and suggestions become the property of IBM.

Please do not use this form for technical questions about the system or for requests for additional publications; this only delays the response. Instead, direct your inquiries or requests to your IBM representative or to the IBM branch office serving your locality.

Corrections or clarifications needed:

Page *Comment*

Please include your name and address in the space below if your wish a reply.

Thank you for your cooperation. No postage necessary if mailed in the U.S.A.

GC21-5039-1

Cut Along Line

Fold

Fold

FIRST CLASS
PERMIT NO. 387
ROCHESTER, MINN.

BUSINESS REPLY MAIL

NO POSTAGE STAMP NECESSARY IF MAILED IN THE UNITED STATES

POSTAGE WILL BE PAID BY . . .

IBM Corporation
General Systems Division
Development Laboratory
Rochester, Minnesota 55901

Attention: Programming Publications, Dept. 425

Fold

Fold

IBM

International Business Machines Corporation
General Systems Division
875 Johnson Ferry Road N. E.
Atlanta, Ga. 30342
(USA Only)

IBM World Trade Corporation
821 United Nations Plaza, New York, New York 10017
(International)

S/3 5445 Disk Storage Program Planning (File No. S3-34) Printed in U.S.A. GC21-5039-1