HEWLETT hp PACKARD

STUDENTS WORKBOOK

COMPUTER MAINTENANCE COURSE

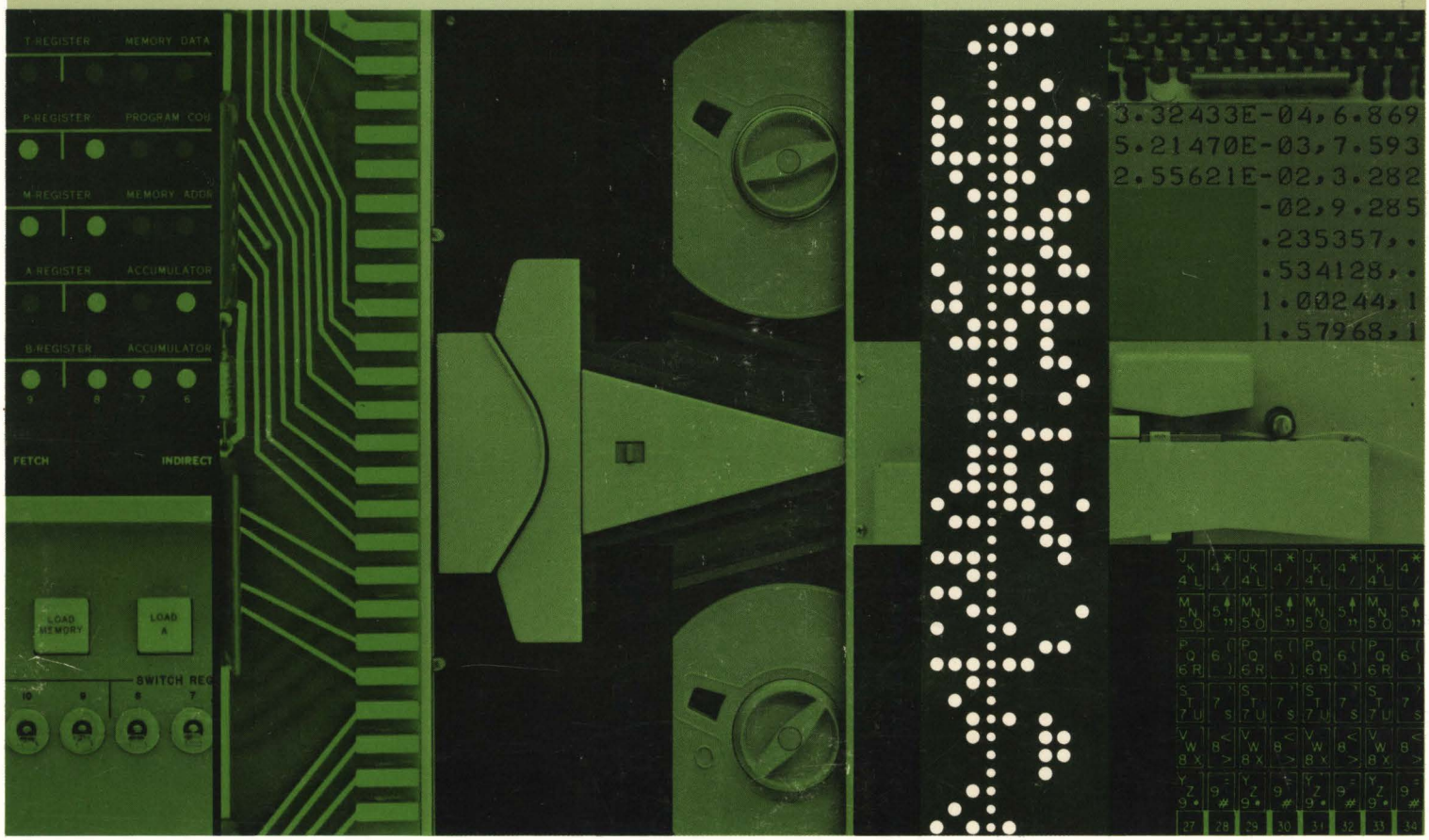

2116B/2115A CENTRAL PROCESSOR UNITS

HEWLETT-PACKARD

COMPUTER MAINTENANCE COURSE

STUDENTS WORKBOOK

HP 2116B/HP 2115A
CENTRAL PROCESSOR UNITS

(HP STOCK NO. 5950-8720)

-NOTICE-

The information contained in this manual is for training purposes only. Consult the Hewlett-Packard documentation supplied with the computer for current information concerning the specific computer system furnished.

11000 Wolfe Road, Cupertino, California 95014 Area Code 408 257-7000 TWX 910-338-0221

Printed in U.S.A. APR 69

SECTION INDEX

AAF	=	A Addressable Flip-Flop
ADD	=	And Instruction Decoded
ADF	=	Add Function
ANF	=	AND Function
ASG	=	Alter Skip Group Instruction Decoded
BAF	=	B Addressable Flip-Flop
CØ, C4, C8, C12, C16	=	Carry to Bits Ø, 4, 8, 12, 16 respectively
CFF	=	Carry Flip-Flop Set Output
CL1	=	Clock 1 Flip-Flop Set Output
CL2	=	Clock 2 Flip-Flop Set Output
CLC	=	Clear Control
CLF	=	Clear Flag
$\overline{\text{CMF}}$	=	Complement Function NOT
$\overline{\text{CMFE}}$	=	Complement Function (Inst. Decoder) NOT
CMFH	=	Complement Function (EAU)
CPR	=	Compare Instruction Decoded
CRS	=	Control Reset to I/O
CTFF	=	Control FF Set Output
DMS	=	Display Memory Switch
EFF	=	Extend FF Set Output
E. IND.	=	Extend Indicator
EIR	=	Enable Instruction Register
ENF	=	Enable Flag
$\overline{\text{EOF}}$	=	Exclusive OR Function NOT
$\overline{\text{EOFE}}$	=	Exclusive OR Function (Inst. Decoder) NOT
EOFH	=	Exclusive OR Function (EAU)
EPH	=	Enable Phase
ESR	=	Enable Service Request
FBFF	=	Flag Buffer FF Set Output
FLFF	=	Flag FF Set Output
FLGØ	=	Flag from Group Ø
FLG1	=	Flag From Group 1
FLG2	=	Flag From Group 2

FLG3	=	Flag From Group 3
HIN	=	Halt Instruction
HIS	=	Hold Interrupt System
HLS	=	Halt Switch
$\overline{\text{HLS}}$	=	Halt Switch NOT
HLSFF	=	Halt Switch FF Set Output
IAK	=	Interrupt Acknowledge
ICFF	=	Interrupt Control FF Set Output
IEN(6)	=	Interrupt Enable (6)
IEN(1Ø)	=	Interrupt Enable (1Ø)
IEN(2Ø)	=	Interrupt Enable (Group 2Ø)
IIR	=	Inhibit Instruction Register
ILS	=	Instruction Loop Switch
INT	=	Interrupt
IOBIØ-16	=	I/O Bus Input Bits Ø thru 16
IOCO	=	I/O Control, Output
$\overline{\text{IOF}}$	=	Inclusive OR Function NOT
IOG	=	I/O Instruction Decoded
IOGE	=	I/O Instruction Decoded (Buffered thru Power Fail)
IOGE(B)	=	I/O Instruction Decoded (Buffered thru Power Fail and I/O Control
IOI	=	I/O Input
IOO	=	I/O Output
IOS	=	I/O Switch Address
$\overline{\text{IR15}}$	=	I Register Bit 15 NOT
IRQ1-17	=	Interrupt Request Units 1-17
IRQFF	=	Interrupt Request FF Set Output
ISEFF	=	Interrupt System Enable FF Set Output
ISG	=	Inhibit Strobe Generator
ISR	=	Input Switch Register
ISZ	=	Increment and Skip if Zero
ITFF	=	Interrupt Timing FF Set Output
JMP	=	Jump Instruction Decoded
JSB	=	Jump Subroutine Instruction Decoded
LADS	=	Load Address Switch

LAS	=	Load A Switch
LBS	=	Load B Switch
LMS	=	Load Memory Switch
LOD	=	Load Instruction Decoded
LPS	=	Loader Protection Switch
MØ-14	=	Memory Address Bits Ø thru 14
MAC	=	Macro Instruction Decoded
MIT	=	Memory Inhibit Timing
MMD13	=	Memory Module Decoder Bit 13
MMD14	=	Memory Module Decoder Bit 14
MNS	=	Memory Normal Switch
MPT	=	Memory Protect
MPTØ	=	Memory Protect Ø
MPT1	=	Memory Protect 1
MPT2	=	Memory Protect 2
MPT3	=	Memory Protect 3
MPT4	=	Memory Protect 4
MRØ-13	=	M Register Bits Ø thru 13
$\overline{\text{MRØ-12}}$	=	M Register Bits Ø thru 12 NOT
MRT	=	Memory Read Timing
MST	=	Memory Strobe Time
MTE	=	Memory Timing Enable
MWL	=	Memory Write Level
MWT	=	Memory Write Time
$\overline{\text{OPO}}$	=	One Phase Operation NOT
OVFF	=	Overflow FF Set Output
OVF. IND.	=	Overflow Indicator
P123	=	Phase 1, 2 or 3
P123G	=	Phase 1, 2 or 3 (Buffered)
PEH	=	Parity Error Halt
PEI	=	Parity Error Interrupt
PH1	=	Phase 1
PH2	=	Phase 2
PH3	=	Phase 3
PH4	=	Phase 4

$\overline{PH5}$	=	Phase 5 NOT
PH1FF	=	Phase 1 FF Set Output
PH2FF	=	Phase 2 FF Set Output
PH3FF	=	Phase 3 FF Set Output
PH4FF	=	Phase 4 FF Set Output
PIND	=	Power Indicator
PNS	=	Phase Normal Switch
POFP	=	Power On/Off Pulse
PON	=	Power On Normal
POPIO	=	Power On Pulse I/O
POPIO(B)	=	Power On Pulse I/O (Buffered)
PRH5	=	Priority High Unit 5
PRH6	=	Priority High Unit 6
PRH1Ø-3Ø	=	Priority High Units 1Ø thru 3Ø
PRL4	=	Priority Low Unit 4
PRL5	=	Priority Low Unit 5
PRS	=	Preset Switch
$\overline{PRS}$	=	Preset Switch NOT
PRSFF	=	Preset FF Set Output
PSO	=	Power Supply On
RARB	=	Read A Register to the R Bus
RBØ-15	=	R Bus Bit Ø-15
RBRB	=	Read B Register to the R Bus
RF1	=	Run 1 FF
$\overline{RF2}$	=	Run 2 Flip-Flop NOT
$\overline{RL4}$	=	Rotate Left 4 Bits NOT
$\overline{RLL}$	=	Rotate Left to Least Significant Bit NOT
RMSB	=	Read M Register to S Bus
RNS	=	Run Switch
$\overline{RNS}$	=	Run Switch NOT
RPB	=	Reset Parity Bit
RPE	=	Reset Parity Error
RPRB	=	Read P Register to R Bus
$\overline{RRS}$	=	Rotate Right to Sign Bit NOT
RSM (6-9) (ISM)	=	Reset M Register Bits 6-9 (Interrupt Store in M Register)

RSM (1Ø-15)	=	Reset M Register Bits 1Ø-15
RST	=	Reset the T Register
RTSB	=	Read T Register to S Bus
S1FF	=	Step 1 FF Set Output
S2FF	=	Step 2 FF set Output
SBØ-15	=	S Bus Bit Ø-15
SC	=	Select Code
SCL(Ø)-(7)	=	Select Code Least Significant Ø thru 7
SCM(Ø)-(7)	=	Select Code Most Significant Ø thru 7
SCS	=	Single Cycle Switch
SEO	=	Switch Exclusive OR
SFC	=	Skip if Flag Clear
SFS	=	Skip if Flag Set
SIR	=	Service Interrupt Request
SKF	=	Skip on Flag
$\overline{\text{SL14}}$	=	Shift Left Bit 14 NOT
$\overline{\text{SL14E}}$	=	Shift Left Bit 14 (Shift Logic) NOT
SL14H	=	Shift Left Bit 14 (EAU)
$\overline{\text{SLM}}$	=	Shift Left Magnitude NOT
$\overline{\text{SLME}}$	=	Shift Left Magnitude (Shift Logic)
SLMH	=	Shift Left Magnitude (EAU)
SRAØ-77	=	Service Request Address Unit Ø-77
SRG	=	Shift Rotate Group Instruction Decoded
$\overline{\text{SRM}}$	=	Shift Right Magnitude NOT
$\overline{\text{SRME}}$	=	Shift Right Magnitude (Shift Logic) NOT
SRMH	=	Shift Right Magnitude (EAU)
SRQ1Ø-27	=	Service Request Units 1Ø thru 27
STØ-16	=	Sense Amp Output Bits Ø thru 16
STBA	=	Store T Bus in A Register
STBB	=	Store T Bus in B Register
STBT	=	Store T Bus in T Register
STC	=	Set Control
STF	=	Set Flag
STM(Ø-5), (Ø-9) (1Ø-11), (12-15)	=	Store M Register Bits Ø-5, Ø-9, 1Ø-11, 12-15 respectively

STP(Ø-9), (1Ø-11) (12-15)	=	Store P Register Bits Ø-9, 1Ø-11, 12-15 respectively
STR	=	Store Instruction Decoded
SWSA	=	Switch Store in A Register
SWSB	=	Switch Store in B Register
SWSM	=	Switch Store in M Register
SWSP	=	Switch Store in P Register
SWST	=	Switch Store in T Register
TØ-7	=	Time Ø thru 7
T3(B)	=	Time 3 (Buffered)
T7S	=	Time 7 with Strobe
TØT1	=	Time Period TØ thru T1
T1T2	=	Time Period T1 thru T2
T3T4	=	Time Period T3 thru T4
T4T5	=	Time Period T4 thru T5
T6T7	=	Time Period T6 thru T7
TAN1	=	T Bus ANDed Bits 0-3
TAN2	=	T Bus ANDed Bits 4-7
TAN3	=	T Bus ANDed Bits 8-11
TAN4	=	T Bus ANDed Bits 12-15
TBØ-15	=	T Bus Bits Ø thru 15
TRØ-15	=	T Register Bits Ø thru 15
$\overline{\text{TRØ-15}}$	=	T Register Bits Ø thru 15 NOT
TRØ(B)	=	T Register Bit Ø (Buffered)
TR2(B)	=	T Register Bit 2 (Buffered)
TS	=	Time Strobe
TSA	=	Time Strobe A
TTK	=	Memory Extender Present
YØ/1	=	Y Driver/Switch Ø/1 Select
Y2/3	=	Y Driver/Switch 2/3 Select

logic equations

II

HP 2116B Equation Summary

$$AAF = TAN1 \cdot \overline{TB14}\,[TAN2 \cdot TAN3\,(\overline{TB12} \cdot \overline{TB13})]\,(T\emptyset \cdot P123G)$$

$$ADD = IR14\,(EIR \cdot \overline{IR12} \cdot \overline{IR13})$$

$$ADF = (ASG \cdot T4T5) + [T1T2\,(JSB \cdot PH3)] + [ADD + ISZ\,(PH3 \cdot T3T4)] + (PH4 \cdot T3T4) + (P123 \cdot T6T7)$$

$$ANF = \overline{IR11}\,(PH3 \cdot T3T4)\,(EIR \cdot \overline{IR14} \cdot \overline{IR13} \cdot IR12)$$

$$ASG = IR1\emptyset\,[\overline{IR15}\,(PH1 \cdot \overline{IR14}\,(\overline{IR12} \cdot \overline{IR13} \cdot EIR))]$$

$$BAF = TB\emptyset\,(T\emptyset \cdot P123G)\,[\overline{TB14} \cdot \overline{TB2}\,(\overline{TB3} \cdot \overline{TB1})]\,[TAN2 \cdot TAN3\,(\overline{TB12} \cdot \overline{TB13})]$$

$$C\emptyset = CFF \cdot T6T7$$

$$C1 = (RB\emptyset \cdot SB\emptyset) + (RB\emptyset \cdot C\emptyset) + (SB\emptyset \cdot C\emptyset)$$

$$C2 = (RB1 \cdot SB1) + (RB1 \cdot C1) + (SB1 \cdot C1)$$

$$C3 = (RB2 \cdot SB2) + (RB2 \cdot C2) + (SB2 \cdot C2)$$

$$C4 = (RB3 \cdot SB3) + (RB3 \cdot C3) + (SB3 \cdot C3)$$

$$C5 = (RB4 \cdot SB4) + (RB4 \cdot C4) + (SB4 \cdot C4)$$

$$C6 = (RB5 \cdot SB5) + (RB5 \cdot C5) + (SB5 \cdot C5)$$

$$C7 = (RB6 \cdot SB6) + (RB6 \cdot C6) + (SB6 \cdot C6)$$

$$C8 = (RB7 \cdot SB7) + (RB7 \cdot C7) + (SB7 \cdot C7)$$

$$C9 = (RB8 \cdot SB8) + (RB8 \cdot C8) + (SB8 \cdot C8)$$

$$C1\emptyset = (RB9 \cdot SB9) + (RB9 \cdot C9) + (SB9 \cdot C9)$$

$$C11 = (RB1\emptyset \cdot SB1\emptyset) + (RB1\emptyset \cdot C1\emptyset) + (SB1\emptyset \cdot C1\emptyset)$$

$$C12 = (RB11 \cdot SB11) + (RB11 \cdot C11) + (SB11 \cdot C11)$$

$$C13 = (RB12 \cdot SB12) + (RB12 \cdot C12) + (SB12 \cdot C12)$$

$$C14 = (RB13 \cdot SB13) + (RB13 \cdot C13) + (SB13 \cdot C13)$$

$$C15 = (RB14 \cdot SB14) + (RB14 \cdot C14) + (SB14 \cdot C14)$$

$$C16 = (RB15 \cdot SB15) + (RB15 \cdot C15) + (SB15 \cdot C15)$$

$$\begin{aligned} CFF = ASG\,\Big\{ & [\overline{TR\emptyset}\,(TAN1 \cdot TAN2 \cdot TAN3 \cdot TAN4 \cdot T5) + (TR4 \cdot T4 \cdot \overline{RB15}) + \\ & (TR3 \cdot T4 \cdot \overline{RB\emptyset}) + (TR5 \cdot T3 \cdot \overline{EFF})] + \\ & [TR\emptyset\,[\overline{(TAN1 \cdot TAN2 \cdot TAN3 \cdot TAN4 \cdot T5)} \cdot \\ & \overline{(TR4 \cdot T4 \cdot \overline{RB15})} \cdot \overline{(TR3 \cdot T4 \cdot RB\emptyset)} \cdot \\ & \overline{(TR5 \cdot T3 \cdot \overline{EFF})}]\,[\overline{TR1} \cdot \overline{TR3} \cdot T5\,(\overline{TR4 + TR5}) + \\ & (TR1 \cdot T5) + (TR4 \cdot T4) + (TR5 \cdot T3)]\,]\Big\} + \\ & [T4 \cdot PH3 \cdot CPR\,(\overline{TAN1 \cdot TAN2 \cdot TAN3 \cdot TAN4})] + \\ & (T4 \cdot PH3 \cdot ISZ \cdot C16) + \\ & (T4 \cdot SKF) + \\ & (TR3 \cdot SRG \cdot \overline{RB\emptyset} \cdot T4) \end{aligned}$$

$CL1 = CF1 \cdot CF2$

$CL2 = CF1 \cdot \overline{CF2}$

$CLC = TR11\ [T4 \cdot IOG\ (TR6 \cdot TR7 \cdot TR8)]$

$CLF = TR9\ (T4 \cdot IOG)$

$CMF = [ASG \cdot T3(TR9)] + [PH4\ (T1T2 + T5)]$

$CPR = EIR \cdot IR14 \cdot \overline{IR13} \cdot IR12$

$CRS = POPIO + [CLC\ (IOG \cdot SCM\emptyset \cdot SCL\emptyset]$

$CTFF = STC \cdot SC$ Typical Interface

$\overline{CTFF} = CRS + (CLC \cdot SC)$ Typical Interface

$DMS = \overline{RF2} \cdot$ DISPLAY MEMORY SW $\cdot \overline{POFP}$

$EFF = [C16\ (TR2B \cdot ASG \cdot T5) + (T4 \cdot PH3 \cdot ADD)] +$
$[R15B\ (SRG\ (TR\emptyset \cdot TR1 \cdot TR2) + (TR6 \cdot TR7 \cdot TR8))] +$
$(\overline{TR6} \cdot TR7 \cdot T3 \cdot ASG) + (TR6 \cdot TR7 \cdot ASG \cdot T3) +$
$[RB\emptyset B\ (SRG\ (TR\emptyset \cdot \overline{TR1} \cdot TR2) + (TR6 \cdot \overline{TR7} \cdot TR8))]$

$\overline{EFF} = [\overline{RB\emptyset}\ (SRG\ (TR\emptyset \cdot \overline{TR1} \cdot TR2) + (TR6 \cdot \overline{TR7} \cdot TR8))]$
$+ [\overline{RB15}\ (SRG\ (TR\emptyset \cdot TR1 \cdot TR2) + (TR6 \cdot TR7 \cdot TR8))]$
$+ (ASG \cdot T3 \cdot TR7 \cdot \overline{TR6}) + (SRG \cdot T4 \cdot TR5) +$
$(ASG \cdot TR6 \cdot \overline{TR7} \cdot T3)$

$EIR = \overline{IIR}\ [\ \overline{PH3} + (\overline{DMS} \cdot \overline{LMS})]$

$ENF = T2$ (Buffered)

$EOF = (T2 \cdot SEO) + (P123 \cdot T\emptyset T1) +$
$(PH3 \cdot T3T4)[(\overline{IR11} \cdot XOR) + LOD + CPR + JSB)] +$
$[\overline{TR9}\ (ASG \cdot T3)] + [IR12 \cdot \overline{CPR}\ (PH3 \cdot T5)] +$
$(STR + PH3 \cdot T2)$

$EPH = \overline{PH5} \cdot \overline{IIR}$

$ESR = ICFF\ (\overline{POPIO} \cdot ISEFF \cdot \overline{HIS})$

$FBFF = POPIO + (STF \cdot SC) + EOF$ Typical Interface

$\overline{FBFF} = (CLF \cdot SC) + (IAK \cdot IRQFF)$ Typical Interface

$FLFF = ENF \cdot FBFF$ Typical Interface

$\overline{FLFF} = CLF \cdot SC$ Typical Interface

$HIN = IOG\ (\overline{TR8} \cdot \overline{TR7} \cdot \overline{TR6})$

$HLS =$ HALT SW.

$\overline{HLS} = \overline{\text{HALT SW.}} + POFP$

$IAK = ICFF\ (T1 \cdot PH1)$

$ICFF = \overline{ITFF}$

$\overline{ICFF} = CRS + (PH4 \cdot T3B) + [\overline{PH5}\ (T5 \cdot IOGE\ (STC + CLC + STF + CLF))]$

IEN6 = ISEFF

IEN1Ø = PRH1Ø · ISEFF

IEN2Ø = IEN6 (PRH1Ø · PRL17)

INT = ESR (FLGØ + FLG1 + FLG2 + FLG3)

IOBOØ-15 = IOCO · RBØ-15

IOCO = $\overline{TR6}$ · TR7 · TR8 (IOG · T4T5)

IOF = (IOG · T4T5) + [$\overline{IR11}$ ($\overline{IR14}$ · $\overline{IR13}$ · $\overline{IR12}$) (PH3 · T3T4)]

IOG = IR1Ø [IR15 (PH1 · $\overline{IR14}$ (EIR · $\overline{IR12}$ · $\overline{IR13}$))]

IOGE = IOG · $\overline{MPC}$

IOI = [(T4T5 · IOG) ($\overline{TR7}$ (IOG · TR8))] + (SEO · T2)

IOO = T3T4 ($\overline{TR6}$ · TR7 · TR8)

IOS = IOG · SCMØ · SCL1

IRQFF = SIR · PRH · FBFF (FLFF · IEN · CTFF)

$\overline{IRQFF}$ = ENF

ISEFF = STF (SCMØ · SCLØ · IOG)

$\overline{ISEFF}$ = CLF (SCMØ · SCLØ · IOG)

ISR = SEO + [IOS ($\overline{TR7}$ (IOG · TR8))]

ISZ = IR11 (EIR · IR12 · IR13 · $\overline{IR14}$)

ITFF = STM 12-15

JMP = IR11 (EIR · $\overline{IR12}$ · IR13 · $\overline{IR14}$)

JSB = IR11 (EIR · IR12 · $\overline{IR13}$ · $\overline{IR14}$)

LADS = LOAD ADDRESS SW · $\overline{RF2}$ · $\overline{POFP}$

LAS = LOAD A SW · $\overline{RF2}$ · $\overline{POFP}$

LBS = LOAD B SW · $\overline{RF2}$ · $\overline{POFP}$

LMS = LOAD MEMORY SW · $\overline{RF2}$ · $\overline{POFP}$

LOD = $\overline{IR12}$ (EIR · IR13 · IR14)

MAC = $\overline{IR10}$ [IR15 ($\overline{IR14}$ · PH1 (EIR · $\overline{IR12}$ · $\overline{IR13}$))]

MIT = MTE {(T4T5 ($\overline{PH3 \cdot ISZ}$)) +
(T3T4 · CF2 ($\overline{PH3 \cdot ISZ}$)) +
(T5T6 · CF2 (PH3 · ISZ)) +
(PH3 · ISZ) [(S67 (PH3 · ISZ) ($\overline{T0T1}$ · $\overline{T6T7}$)) +
(T5T6 · $\overline{T4T5}$ (PH3 · ISZ))]}

$$
\begin{aligned}
MPT &= LPS \cdot M6 \cdot M7 \cdot M8 \cdot M9 \cdot M1\emptyset \cdot M11 \\
&\quad [(M12 \cdot M14 \cdot TTK \cdot MPT1 \cdot MPT2) + \\
&\quad (M12 \cdot \overline{M13} \cdot \overline{M14} \cdot MPT1 \cdot \overline{MPT2}) + \\
&\quad (M12 \cdot M13 \cdot \overline{M14} \cdot \overline{MPT3}) + \\
&\quad (M12 \cdot M13 \cdot M14 \cdot MPT3 \cdot \overline{MPT4}) + \\
&\quad (M12 \cdot M13 \cdot M14 \cdot TTK \cdot MPT4)] \\
MRT &= MTE\ [T\emptyset + (T\emptyset T1 \cdot \overline{CF2}) + (T1T2 \cdot CF2)] \\
MST &= [T2(MRT + (MTE \cdot \overline{CF1}))]\quad [(\overline{LMS + ISG})\ (\overline{AAF + BAF}) \\
&\quad (PH3\ (\overline{JSB + STR}))] \\
MTE &= P123B \cdot \overline{MPT}\ (MNS) \\
MWL &= (PH3 \cdot ISZ) + [(LMS + ISG) + (AAF + BAF) + (PH3 + (JSB + STR))] \\
MWT &= MTE\ [(S67\ (PH3 \cdot ISZ)\ (\overline{T\emptyset T1} \cdot \overline{T6T7})) + \\
&\quad (T5T6 \cdot \overline{T4T5}\ (PH3 \cdot ISZ)) + (T4T5\ (\overline{PH3 \cdot ISZ}))] \\
OPO &= \overline{IR14} \cdot PH1\ (EIR \cdot \overline{IR12} \cdot \overline{IR13}) \\
\overline{OPO} &= IR14 + \overline{PH1} + (\overline{EIR} + IR12 + IR13) \\
OVFF &= (STF \cdot IOS) + [(ADD \cdot PH3 \cdot T4) + (TR2B \cdot ASG \cdot T5) \cdot \\
&\quad (TR15 \cdot \overline{RB15} \cdot \overline{SB15}) + (SB15 \cdot RB15B \cdot \overline{TB15})] \\
\overline{OVFF} &= CLF \cdot IOS \\
P123 &= (PH1FF + PH2FF + PH3FF)\ (RF2 \cdot EPH) \\
PH1 &= (PH1FF\ (RF2 \cdot EPH) \\
PH1FF &= (JMP \cdot PH2 \cdot \overline{TR15} \cdot \overline{PH4FF}) + \\
&\quad (\overline{PH4FF} \cdot PH3) + \\
&\quad (PRSFF + POFP) + \\
&\quad (PH4) \\
\overline{PH1FF} &= PH2FF + PH3FF + PH4FF \\
PH2 &= PH2FF\ (RF2 \cdot EPH) \\
PH2FF &= (TR15 \cdot PH1 \cdot \overline{PH4FF} \cdot \overline{OPO}) + (PH2 \cdot TR15) \\
\overline{PH2FF} &= PH1FF + PH3FF + PH4FF \\
PH3 &= PH3FF\ (RF2 \cdot EPH) \\
PH3FF &= (\overline{OPO} \cdot PH1\ (\overline{TR15} \cdot \overline{PH4FF} \cdot \overline{JMP})) + \\
&\quad (PH2\ (\overline{TR15} \cdot \overline{PH4FF} \cdot \overline{JMP})) + \\
&\quad [(LMS + DMS)\ (S1FF \cdot \overline{S2FF})] \\
\overline{PH3FF} &= PH1FF + PH2FF + PH4FF
\end{aligned}
$$

$$
\begin{aligned}
PH4 &= PH4FF(RF2 \cdot EPH) \\
PH4FF &= [INT \cdot RUN1\ (\overline{JSB} \cdot \overline{JMP})] + \\
&\quad (RUN1 \cdot INT \cdot \overline{IR15}) \\
\overline{PH4FF} &= PH1FF \\
POPIO &= T5\ (PRSFF + POFP) \\
PRS &= PRESET\ SW \cdot \overline{RF2} \\
\overline{PRS} &= \overline{PRESET\ SW.} + POFP \\
RARB &= AAF\ [(\overline{JSB \cdot PH3})\ (P123 \cdot T1)] + \\
&\quad \overline{IR11}\ \Big\{ [(PH3 \cdot \overline{IR14} \cdot \overline{IR11} \cdot EIR)\ (PH3 \cdot T3T4)] + \\
&\qquad [CPR\ (PH3 \cdot T3T4)] + \\
&\qquad [ADD\ (PH3 \cdot T3T4)] + \\
&\qquad [(T3) + (T4T5)\ (SRG + (IOG \cdot \overline{TR6}))] + \\
&\qquad [\overline{TR8}\ (ASG \cdot T3)] + \\
&\qquad (STR \cdot PH3 \cdot T2) + \\
&\qquad (ASG \cdot T4T5) \Big\} \\
RB\emptyset &= RARB\ (AR\emptyset) + \\
&\quad RBRB\ (BR\emptyset) + \\
&\quad RPRB\ (PR\emptyset) + \\
&\quad ISZ\ (PH3 \cdot T3T4) \\
RB1\text{-}15 &= RARB\ (AR1\text{-}15) + \\
&\quad RBRB\ (BR1\text{-}15) + \\
&\quad RPRB\ (PR1\text{-}15) \\
RBRB &= BAF\ [(\overline{JSB \cdot PH3})\ (P123 \cdot T1)] + \\
&\quad IR11\ \Big\{ [(PH3 \cdot \overline{IR14} \cdot \overline{IR11} \cdot EIR)\ (PH3 \cdot T3T4)] + \\
&\qquad [CPR\ (PH3 \cdot T3T4)] + \\
&\qquad [ADD\ (PH3 \cdot T3T4)] + \\
&\qquad [(T3) + (T4T5)\ (SRG + (IOG \cdot \overline{TR6}))] + \\
&\qquad [\overline{TR8}\ (ASG \cdot T3)] + \\
&\qquad (STR \cdot PH3 \cdot T2) + \\
&\qquad (ASG \cdot T4T5) \Big\} \\
RF1 &= RNS\ (S1FF \cdot \overline{S2FF}) \cdot T5 \\
\overline{RF1} &= HLSFF + T5\ (PEH + HIN) \\
RF2 &= (S1FF \cdot S2FF)\ T7S \\
\overline{RF2} &= PRSFF + POFP + \overline{RF1}\ (T7S) \\
RL4 &= SRG\ [(TR\emptyset \cdot TR1 \cdot TR2) + (TR6 \cdot TR7 \cdot TR8)]
\end{aligned}
$$

RLL	=	SRG $[(\overline{TR\emptyset} \cdot TR1 \cdot \overline{TR2}) + (\overline{TR6} \cdot TR7 \cdot \overline{TR8})]$
RMSB	=	$(T\emptyset \cdot P123) + [T3T4(PH3 \cdot JSB)]$
RNS	=	$RUN\ SW. \cdot \overline{POFP}$
$\overline{RNS}$	=	$\overline{RUN\ SW.} + POFP$
RPB	=	$P123B \cdot T\emptyset \cdot TS$
RPE	=	$PRSFF + POFP$
RPRB	=	$(PH4 \cdot T3T4) + (PH3 \cdot T6T7) +$
		$(OPO \cdot T6T7) + [T1T2\ (JSB \cdot PH3)] +$
		$[PH4\ (T1T2 + T5)]$
RRS	=	SRG $[(TR\emptyset \cdot TR1 \cdot \overline{TR2}) + (TR6 \cdot TR7 \cdot \overline{TR8})]$
RSM6-9	=	$T7 \cdot PH4$
RSM10-15	=	$RSM6\text{-}9 + [(TS \cdot PH1 \cdot \overline{IR10} \cdot \overline{OPO})\ T7]$
RST	=	$TS(T\emptyset \cdot P123)$
RTSB	=	$EIR \cdot \overline{JSB}\ (PH3 \cdot T3T4) +$
		$T6T7\ [PH2 + (PH1 \cdot \overline{OPO})] +$
		$CPR \cdot IR12\ (PH3 \cdot T5)$
S1FF	=	$T2\ (RNS + SCS + LMS + DMS)$
S2FF	=	$S1FF \cdot T1$
SB$\emptyset$	=	$(RMSB \cdot MR\emptyset) + (RTSB \cdot TR\emptyset) +$
		$(IOI \cdot IOBI\emptyset) +$
		$(\overline{T6T7 \cdot ILS}) \{[(PH4 \cdot T3T4) + (PH3 \cdot T6T7) +$
		$(OPO \cdot T6T7)] +$
		$[T1T2\ (PH3 \cdot JSB)] +$
		$[TR2\ (ASG \cdot T4T5)]\}$
SB1-15	=	$(RMSB \cdot MR1\text{-}15) +$
		$(RTSB \cdot TR1\text{-}15) +$
		$(IOI \cdot IOBI\ 1\text{-}15)$
SCL$\emptyset$	=	$\overline{TR\emptyset} \cdot \overline{TR1} \cdot \overline{TR2} \cdot \overline{PH5}$
SCL1	=	$TR\emptyset \cdot \overline{TR1} \cdot \overline{TR2} \cdot \overline{PH5}$
SCL2	=	$\overline{TR\emptyset} \cdot TR1 \cdot \overline{TR2} \cdot \overline{PH5}$
SCL3	=	$TR\emptyset \cdot TR1 \cdot \overline{TR2} \cdot \overline{PH5}$
SCL4	=	$\overline{TR\emptyset} \cdot \overline{TR1} \cdot TR2 \cdot \overline{PH5}$
SCL5	=	$TR\emptyset \cdot \overline{TR1} \cdot TR2 \cdot \overline{PH5}$

SCL6	=	$\overline{TR\emptyset} \cdot TR1 \cdot TR2 \cdot \overline{PH5}$
SCL7	=	$TR\emptyset \cdot TR1 \cdot TR2 \cdot \overline{PH5}$
SCMØ	=	$\overline{TR3} \cdot \overline{TR4} \cdot \overline{TR5} \cdot \overline{PH5}$
SCM1	=	$TR3 \cdot \overline{TR4} \cdot \overline{TR5} \cdot \overline{PH5}$
SCM2	=	$\overline{TR3} \cdot TR4 \cdot \overline{TR5} \cdot \overline{PH5}$
SCM3	=	$TR3 \cdot TR4 \cdot \overline{TR5} \cdot \overline{PH5}$
SCM4	=	$\overline{TR3} \cdot \overline{TR4} \cdot TR5 \cdot \overline{PH5}$
SCM5	=	$TR3 \cdot \overline{TR4} \cdot TR5 \cdot \overline{PH5}$
SCM6	=	$\overline{TR3} \cdot TR4 \cdot TR5 \cdot \overline{PH5}$
SCM7	=	$TR3 \cdot TR4 \cdot TR5 \cdot \overline{PH5}$
SCS	=	SINGLE CYCLE SW $\cdot \overline{RF2} \cdot \overline{POFP}$
SEO	=	$LMS + LADS + [LAS + (AAF \cdot LMS)] +$
		$[LBS + (BAF \cdot LMS)]$
SFC	=	$IOG\ (\overline{TR6} \cdot TR7 \cdot \overline{TR8})$
SFS	=	$IOG\ (TR6 \cdot TR7 \cdot \overline{TR8})$
SIR	=	T5 (Buffered)
SKF	=	$(SFS \cdot IOS \cdot OVFF) +$
		$(SFC \cdot IOS \cdot \overline{OVFF}) +$
		$SFS \cdot ISEFF\ (IOGE \cdot SCM\emptyset \cdot SCL\emptyset) +$
		$SFC \cdot \overline{ISEFF}\ (IOGE \cdot SCM\emptyset \cdot SCL\emptyset) +$
		$SFS \cdot FLFF\ (IOGE \cdot SCM- \cdot SCL-) +$
		$SFC \cdot \overline{FLFF}\ (IOGE \cdot SCM- \cdot SCL-)$
SL14	=	$SRG\ [(\overline{TR\emptyset} \cdot TR1 \cdot TR2) + (\overline{TR6} \cdot TR7 \cdot TR8)] +$
		$SRG\ [(\overline{TR\emptyset} \cdot TR1 \cdot \overline{TR2}) + (\overline{TR6} \cdot TR7 \cdot \overline{TR8})]$
SLM	=	$SRG\ (\overline{TR6} + \overline{TR\emptyset})$
SRG	=	$\overline{IR1\emptyset}\ [\overline{IR15}\ (PH1 \cdot IR14\ (\overline{IR12} \cdot \overline{IR13} \cdot EIR))]$
SRM	=	$SRG\ [(TR6 \cdot \overline{TR8}) + (\overline{TR\emptyset \cdot TR2}) +$
		$(TR6 \cdot \overline{TR7}) + (TR\emptyset \cdot \overline{TR1})]$
STØ-16	=	$MST \cdot SA\emptyset\text{-}16$

$$
\begin{aligned}
STBA &= SWSA + T4\,(\overline{IR14} \cdot \overline{IR11} \cdot EIR) + \\
&\quad AAF\,[\overline{CPR} \cdot IR12\,(PH3 \cdot T5)] + \overline{IR11} \\
&\quad \Big\{(TR2 \cdot ASG \cdot T5) + \\
&\quad (TR4 \cdot SRG \cdot T5) + \\
&\quad (\overline{TR7} \cdot TR8 \cdot IOG) + \\
&\quad (TR9 \cdot SRG \cdot T3) + \\
&\quad (ASG \cdot T3) + \\
&\quad [\overline{IR12} \cdot IR14 \cdot EIR\,(T4 \cdot PH3)]\Big\} \\
STBB &= SWSB + BAF\,[\overline{CPR} \cdot IR12\,(PH3 \cdot T5)] + \\
&\quad IR11\,\Big\{(TR2 \quad ASG \quad T5) + \\
&\qquad (TR4 \cdot SRG \cdot T5) + \\
&\qquad (\overline{TR7} \cdot TR8 \cdot IOG) + \\
&\qquad (TR9 \cdot SRG \cdot T3) + \\
&\qquad (ASG \cdot T3) + \\
&\qquad [\overline{IR12} \cdot IR14 \cdot EIR\,(T4 \cdot PH3)]\Big\} \\
STBT &= SWST + (AAF + BAF\,(P123 \cdot T1)] + \\
&\quad [STR + JSB\,(PH3 \cdot T2)] + \\
&\quad (ISZ \cdot T4 \cdot PH3) \\
STC &= \overline{TR11}\,[T4 \cdot IOG\,(TR6 \cdot TR7 \cdot TR8)] \\
STF &= T3\,(TR6 \cdot \overline{TR7} \cdot \overline{TR8}) \\
STM1\emptyset\text{-}15 &= SWSM + T7\,(OPO + PH2 + PH3) \\
STM6\text{-}9 &= STM1\emptyset\text{-}15 + (T7 \cdot PH1 \cdot OPO \cdot EIR) \\
STM\emptyset\text{-}5 &= STM6\text{-}9 + (T7 \cdot PH4) \\
STP1\emptyset\text{-}15 &= SWSP + (\overline{IR1\emptyset} \cdot JMP \cdot T5 \cdot PH1) + \\
&\quad [PH4\,(T2 + T4T5)] + [T4\,(PH3 \cdot JSB)] + \\
&\quad \Big\{T7\,[OPO + PH3 + (PH2 \cdot JMP \cdot \overline{TR15})]\Big\} \\
STP\emptyset\text{-}9 &= STP1\emptyset\text{-}15 + (PH1 \cdot T7 \cdot JMP \cdot \overline{TR15}) \\
STR &= IR12\,(EIR \cdot IR13 \cdot IR14) \\
SWSA &= T2\,[LAS + (AAF \cdot LMS)] \\
SWSB &= T2\,[LBS + (BAF \cdot LMS)] \\
SWSM &= T2 \cdot LADS \\
SWSP &= T2 \cdot LADS \\
SWST &= T2 \cdot LMS \\
S67 &= (\overline{T1T2} \cdot \overline{T3T4})\,\Big\{\overline{T7T\emptyset}\,[(\overline{PH3} + \overline{ISZ}) + (\overline{T5T6})]\Big\}
\end{aligned}
$$

$$T\emptyset = T7T\emptyset \cdot T\emptyset T1$$
$$T\emptyset T1 = T7T\emptyset \cdot CL1$$
$$T1 = T\emptyset T1 \cdot T1T2$$
$$T1T2 = T\emptyset T1 \cdot CL2$$
$$T2 = T1T2 \cdot T2T3$$
$$T2T3 = T1T2 \cdot CL1$$
$$T3 = T2T3 \cdot T3T4$$
$$T3T4 = T2T3 \cdot CL2$$
$$T4 = T3T4 \cdot T4T5$$
$$T4T5 = T3T4 \cdot CL1$$
$$T5 = T4T5 \cdot T5T6$$
$$T5T6 = T4T5 \cdot CL2$$
$$T6 = T5T6 \cdot T6T7$$
$$T6T7 = S67 \cdot CL1$$
$$T7 = T6T7 \cdot T7T\emptyset$$
$$T7T\emptyset = T6T7 \cdot CL2$$
$$TAN1 = \overline{TB\emptyset} \cdot \overline{TB1} \cdot \overline{TB2} \cdot \overline{TB3}$$
$$TAN2 = \overline{TB4} \cdot \overline{TB5} \cdot \overline{TB6} \cdot \overline{TB7}$$
$$TAN3 = \overline{TB8} \cdot \overline{TB9} \cdot \overline{TB1\emptyset} \cdot \overline{TB11}$$
$$TAN4 = \overline{TB12} \cdot \overline{TB13} \cdot \overline{TB14} \cdot \overline{TB15}$$
$$\begin{aligned} TB\emptyset = {} & ADF\,[(RB\emptyset \cdot SB\emptyset \cdot C\emptyset) + \\ & \quad (RB\emptyset \cdot \overline{SB\emptyset} \cdot \overline{C\emptyset}) + \\ & \quad (\overline{RB\emptyset} \cdot SB\emptyset \cdot \overline{C\emptyset})] + \\ & EOF\,[(\overline{RB\emptyset} \cdot SB\emptyset) + \\ & \quad (RB\emptyset \cdot \overline{SB\emptyset})] + \\ & IOF\ (RB\emptyset + SB\emptyset) + \\ & ANF\ (RB\emptyset \cdot SB\emptyset) + \\ & CMF \cdot \overline{RB\emptyset} + \\ & SRM\,(RB1 + SB1) + \\ & RL4\,(RB12 + SB12) + \\ & RLL\,(RB15 + SB15) + \\ & RSM6\text{-}9 \cdot SRAX1, X3, X5 \text{ or } X7 \\ & EFF \cdot SRG\,[(T3 \cdot \overline{TR6} \cdot TR7 \cdot TR8) + (T5 \cdot \overline{TR\emptyset} \cdot TR1 \cdot TR2)] \end{aligned}$$

$$
\begin{aligned}
TB1 \quad = \quad & ADF\ [(RB1 \cdot SB1 \cdot C1) + (RB1 \cdot \overline{SB1} \cdot \overline{C1}) + \\
& \quad (\overline{RB1} \cdot SB1 \cdot \overline{C1})] + \\
& EOF\ [(\overline{RB1} \cdot SB1) + (RB1 \cdot \overline{SB1})] + \\
& IOF\ (RB1 + SB1) + \\
& ANF\ (RB1 \cdot SB1) + \\
& CMF \cdot \overline{RB1} + \\
& SRM\ (RB2 + SB2) + \\
& SLM\ (RB\emptyset + SB\emptyset) + \\
& RL4\ (RB13 + SB13) + \\
& RSM6\text{-}9 \cdot SRAX2, X3, X6 \text{ or } X7 \\
TB2 \quad = \quad & ADF\ [(RB2 \cdot SB2 \cdot C2) + (RB2 \cdot \overline{SB2} \cdot \overline{C2}) + \\
& \quad (\overline{RB2} \cdot SB2 \cdot \overline{C2})] + \\
& EOF\ [(\overline{RB2} \cdot SB2) + (RB2 \cdot \overline{SB2})] + \\
& IOF\ (RB2 + SB2) + \\
& ANF\ (RB2 \cdot SB2) + \\
& CMF \cdot \overline{RB2} + \\
& SRM\ (RB3 + SB3) + \\
& SLM\ (RB1 + SB1) + \\
& RL4\ (RB14 + SB14) + \\
& RSM6\text{-}9 \cdot SRAX4, X5, X6 \text{ or } X7 \\
TB3 \quad = \quad & ADF\ [(RB3 \cdot SB3 \cdot C3) + (RB3 \cdot \overline{SB3} \cdot \overline{C3}) + \\
& \quad (\overline{RB3} \cdot SB3 \cdot \overline{C3})] + \\
& EOF\ [(\overline{RB3} \cdot SB3) + (RB3 \cdot \overline{SB3})] + \\
& IOF\ (RB3 + SB3) + \\
& ANF\ (RB3 \cdot SB3) + \\
& CMF \cdot \overline{RB3} + \\
& SLM\ (RB2 + SB2) + \\
& SRM\ (RB4 + SB4) + \\
& RL4\ (RB15 + SB15) + \\
& RSM6\text{-}9 \cdot SRA1X, 3X, 5X \text{ or } 7X
\end{aligned}
$$

$$
\begin{aligned}
TB4 \quad = \quad & ADF\,[(RB4 \cdot SB4 \cdot C4) + (RB4 \cdot \overline{SB4} \cdot \overline{C4}) + \\
& \quad (\overline{RB4} \cdot SB4 \cdot \overline{C4})] + \\
& EOF\,[(\overline{RB4} \cdot SB4) + (RB4 \cdot \overline{SB4})] + \\
& IOF\,(RB4 + SB4) + \\
& ANF\,(RB4 \cdot SB4) + \\
& CMF \cdot \overline{RB4} + \\
& SRM\,(RB5 + SB5) + \\
& SLM\,(RB3 + SB3) + \\
& RL4\,(RB\emptyset + SB\emptyset) + \\
& RSM6\text{-}9 \cdot SRA2X, 3X, 5X \text{ or } 7X \\
TB5 \quad = \quad & ADF\,[(RB5 \cdot SB5 \cdot C5) + (RB5 \cdot \overline{SB5} \cdot \overline{C5}) + \\
& \quad (\overline{RB5} \cdot SB5 \cdot \overline{C5})] + \\
& EOF\,[(RB5 \cdot \overline{SB5}) + (\overline{RB5} \cdot SB5)] + \\
& IOF\,(RB5 + SB5) + \\
& ANF\,(RB5 \cdot SB5) + \\
& CMF \cdot \overline{RB5} + \\
& SRM\,(RB6 + SB6) + \\
& SLM\,(RB4 + SB4) + \\
& RL4\,(RB1 + SB1) + \\
& RSM6\text{-}9 \cdot SRA4X, 5X, 6X \text{ or } 7X \\
TB6 \quad = \quad & ADF\,[(RB6 \cdot SB6 \cdot C6) + (RB6 \cdot \overline{SB6} \cdot \overline{C6}) + \\
& \quad (\overline{RB6} \cdot SB6 \cdot \overline{C6})] + \\
& EOF\,[(\overline{RB6} \cdot SB6) + (RB6 \cdot \overline{SB6})] + \\
& IOF\,(RB6 + SB6) + \\
& ANF\,(RB6 \cdot SB6) + \\
& CMF \cdot \overline{RB6} + \\
& SRM\,(RB7 + SB7) + \\
& SLM\,(RB5 + SB5) + \\
& RL4\,(RB2 + SB2) +
\end{aligned}
$$

$$
\begin{aligned}
TB7 \quad = \quad & ADF\ [(RB7 \cdot SB7 \cdot C7) + (RB7 \cdot \overline{SB7} \cdot \overline{C7}) + \\
& \quad (\overline{RB7} \cdot SB7 \cdot \overline{C7})] + \\
& EOF\ [(RB7 \cdot \overline{SB7}) + (\overline{RB7} \cdot SB7)] + \\
& IOF\ (RB7 + SB7) + \\
& ANF\ (RB7 \cdot SB7) + \\
& CMF \cdot \overline{RB7} + \\
& SRM\ (RB8 + SB8) + \\
& SLM\ (RB6 + SB6) + \\
& RL4\ (RB3 + SB3) + \\
TB8 \quad = \quad & ADF\ [(RB8 \cdot SB8 \cdot C8) + (RB8 \cdot \overline{SB8} \cdot \overline{C8}) + \\
& \quad (\overline{RB8} \cdot SB8 \cdot \overline{C8})] + \\
& EOF\ [(RB8 \cdot \overline{SB8}) + (\overline{RB8} \cdot SB8)] + \\
& IOF\ (RB8 + SB8) + \\
& ANF\ (RB8 \cdot SB8) + \\
& CMF \cdot \overline{RB8} + \\
& SRM\ (RB9 + SB9) + \\
& SLM\ (RB7 + SB7) + \\
& RL4\ (RB4 + SB4) \\
TB9 \quad = \quad & ADF\ [(RB9 \cdot SB9 \cdot C9) + (RB9 \cdot \overline{SB9} \cdot \overline{C9}) + \\
& \quad (\overline{RB9} \cdot SB9 \cdot \overline{C9})] + \\
& EOF\ [(RB9 \cdot \overline{SB9}) + (\overline{RB9} \cdot SB9)] + \\
& IOF\ (RB9 + SB9) + \\
& ANF\ (RB9 \cdot SB9) + \\
& CMF \cdot \overline{RB9} + \\
& SRM\ (RB1\emptyset + SB1\emptyset) + \\
& SLM\ (RB8 + SB8) + \\
& RL4\ (RB5 + SB5) \\
TB1\emptyset \quad = \quad & ADF\ [(RB1\emptyset \cdot SB1\emptyset \cdot C1\emptyset) + (RB1\emptyset \cdot \overline{SB1\emptyset} \cdot \overline{C1\emptyset}) + \\
& \quad (\overline{RB1\emptyset} \cdot SB1\emptyset \cdot \overline{C1\emptyset})] + \\
& EOF\ [(RB1\emptyset \cdot \overline{SB1\emptyset}) + (\overline{RB1\emptyset} \cdot SB1\emptyset)] + \\
& IOF\ (RB1\emptyset + SB1\emptyset) + \\
& ANF\ (RB1\emptyset \cdot SB1\emptyset) + \\
& CMF \cdot \overline{RB1\emptyset} + \\
& SRM\ (RB11 + SB11) + \\
& SLM\ (RB9 + SB9) + \\
& RL4\ (RB6 + SB6)
\end{aligned}
$$

$$
\begin{aligned}
TB11 = \; & ADF\,[(RB11 \cdot SB11 \cdot C11) + (RB11 \cdot \overline{SB11} \cdot \overline{C11}) + \\
& \quad (\overline{RB11} \cdot SB11 \cdot \overline{C11})] + \\
& EOF\,[(RB11 \cdot \overline{SB11}) + (\overline{RB11} \cdot SB11)] + \\
& IOF\,(RB11 + SB11) + \\
& ANF\,(RB11 \cdot SB11) + \\
& CMF \cdot \overline{RB11} + \\
& SLM\,(RB1\emptyset + SB1\emptyset) + \\
& SRM\,(RB12 + SB12) + \\
& RL4\,(RB7 + SB7)
\end{aligned}
$$

$$
\begin{aligned}
TB12 = \; & ADF\,[(RB12 \cdot SB12 \cdot C12) + (RB12 \cdot \overline{SB12} \cdot \overline{C12}) + \\
& \quad (\overline{RB12} \cdot SB12 \cdot \overline{C12})] + \\
& EOF\,[(RB12 \cdot \overline{SB12}) + (\overline{RB12} \cdot SB12)] + \\
& IOF\,(RB12 + SB12) + \\
& ANF\,(RB12 \cdot SB12) + \\
& CMF \cdot \overline{RB12} + \\
& SRM\,(RB13 + SB13) + \\
& SLM\,(RB11 + SB11) + \\
& RL4\,(RB8 + SB8)
\end{aligned}
$$

$$
\begin{aligned}
TB13 = \; & ADF\,[(RB13 \cdot SB13 \cdot C13) + (RB13 \cdot \overline{SB13} \cdot \overline{C13}) + \\
& \quad (\overline{RB13} \cdot SB13 \cdot \overline{C13})] + \\
& EOF\,[(RB13 \cdot \overline{SB13}) + (\overline{RB13} \cdot SB13)] + \\
& IOF\,(RB13 + SB13) + \\
& ANF\,(RB13 \cdot SB13) + \\
& CMF \cdot \overline{RB13} + \\
& SRM\,(RB14 + SB14) + \\
& SLM\,(RB12 + SB12) + \\
& RL4\,(RB9 + SB9)
\end{aligned}
$$

$$
\begin{aligned}
TB14 = \; & ADF\,[(RB14 \cdot SB14 \cdot C14) + (RB14 \cdot \overline{SB14} \cdot \overline{C14}) + \\
& \quad (\overline{RB14} \cdot SB14 \cdot \overline{C14})] + \\
& EOF\,[(RB14 \cdot \overline{SB14}) + (\overline{RB14} \cdot SB14)] + \\
& IOF\,(RB14 + SB14) + \\
& ANF\,(RB14 \cdot SB14) + \\
& CMF \cdot \overline{RB14} + \\
& SRM\,(RB15 + SB15) + \\
& SLM\,(RB13 + SB13) + \\
& RL4\,(RB1\emptyset + SB1\emptyset)
\end{aligned}
$$

$$
\begin{aligned}
TB15 \quad = \quad & ADF\,[(RB15 \cdot SB15 \cdot C15) + (RB15 \cdot \overline{SB15} \cdot \overline{C15}) + \\
& \qquad (\overline{RB15} \cdot SB15 \cdot \overline{C15})] + \\
& EOF\,[(RB15 \cdot \overline{SB15}) + (\overline{RB15} \cdot SB15)] + \\
& IOF\,(RB15 + SB15) + \\
& ANF\,(RB15 \cdot SB15) + \\
& CMF \cdot \overline{RB15} + \\
& SL14\,(RB14 + SB14) + \\
& RRS\,(RB\emptyset + SB\emptyset) + \\
& RL4\,(RB11 + SB11) + \\
& EFF \cdot SRG\,[(T3 \cdot TR6 \cdot \overline{TR7} \cdot TR8) + \\
& \qquad (T5 \cdot TR\emptyset \cdot \overline{TR1} \cdot TR2)] + \\
& RB15 \cdot SRG\,[(\overline{TR7} \cdot \overline{TR8} \cdot T3) + (\overline{TR1} \cdot \overline{TR2} \cdot T5)]
\end{aligned}
$$

$$
\begin{aligned}
TS \quad &= \quad \overline{CF1D} \cdot \overline{CF1} \\
TSA \quad &= \quad \overline{CF1D} \cdot \overline{CF1} \\
X\emptyset \quad &= \quad (\overline{TTK} \cdot \overline{M12} \cdot M13 \cdot M14) + (\overline{M12} \cdot \overline{M13} \cdot \overline{M14}) \\
X1 \quad &= \quad (\overline{TTK} \cdot M12 \cdot M13 \cdot M14) + (M12 \cdot \overline{M13} \cdot \overline{M14}) \\
X2 \quad &= \quad \overline{M12} \cdot M13 \cdot \overline{M14} \\
X3 \quad &= \quad M12 \cdot M13 \cdot \overline{M14} \\
XOR \quad &= \quad EIR \cdot \overline{IR14} \cdot IR13 \cdot \overline{IR12} \\
Y\emptyset/1 \quad &= \quad (\overline{TTK} \cdot M13 \cdot M14) + (\overline{M14} \cdot \overline{M13}) \\
Y2/3 \quad &= \quad M13 \cdot \overline{M14}
\end{aligned}
$$

computer geography

III

HP 2116B BOARD LOCATION

(FRONT VIEW)

201	I/O CONTROL	02116-6041
202	I/O ADDRESS ENCODE	02116-6194
203	†(I/O 10/11)	
204	†(I/O 11/12)	
205	†(I/O 12/13)	
206	†(I/O 13/14)	
207	†(I/O 14/15)	
208	†(I/O 15/16)	
209	†(I/O 16/17)	
210	†(I/O 17/20)	
211	†(I/O 20/21)	
212	†(I/O 21/22)	
213	†(I/O 22/23)	
214	†(I/O 23/24)	
215	†(I/O 24/25)	
216	†(I/O 25/26)	
217	†(I/O 26/27)	
218	†(I/O 27/30)	
219	** I/O EXTENDER	02116-6182
220	** I/O EXTENDER	02116-6183
221	** MEMORY EXTENDER	02116-6181
222	** MEMORY EXTENDER	02116-6181

101	FRONT PANEL COUPLER	02116-6184
102	ARITHMETIC LOGIC 12-15	02116-6026
103	ARITHMETIC LOGIC 8-11	02116-6026
104	ARITHMETIC LOGIC 4-7	02116-6026
105	ARITHMETIC LOGIC 0-3	02116-6026
106	TIMING GENERATOR	02116-6281
107	INSTRUCTION DECODER	02116-6027
108	SHIFT LOGIC	02116-6029
109	EAU*	02116-6196
110	EAU*	02116-6202
111	SPARE	
112	SPARE	
113	SPARE	
114	SPARE	
115	SPARE	
116	DMA* DMI*	02116-6206 02116-6221
117	DMA*	02116-6206
118	DMA*	02116-6205
119	DMA*	02116-6204
120	DMA*	02116-6203
	POWER SUPPLY TEST POINTS	

1	PWR FAIL PWR FAIL** (RESTART)	02116-6175 12588-6001
2	MMD	02116-6274
3	PE**	12591-6001
4	ID3*	02116-6265
5	SPARE	
6	ID2*	02116-6265
7	SPARE	
8	DSY 2/3*	02116-6266
9	DSX 2/3*	02116-6266
10	SA3*	02115-6001
11	SA 2*	02115-6001
12	SA 1	02115-6001
13	SAØ	02115-6001
14	DSY Ø/1	02116-6266
15	DSX Ø/1	02116-6266
16	ID1	02116-6265
17	SPARE	
18	IDØ	02116-6265
19	SPARE	
20	DML	02115-6044
21	MEMORY PROTECT**	12581-6001
22	SPARE	

* *OPTIONAL BOARDS MAY BE ADDED AT ANY TIME.*

** *OPTIONAL BOARDS MAY BE ADDED AFTER ADDITIONAL BACK PLANE WIRING*

† *I/O PLUG-IN OPTIONS MAY BE ADDED AT ANY TIME PROVIDING THE CURRENT REQUIREMENTS DO NOT EXCEED THE POWER SUPPLY RATINGS.*

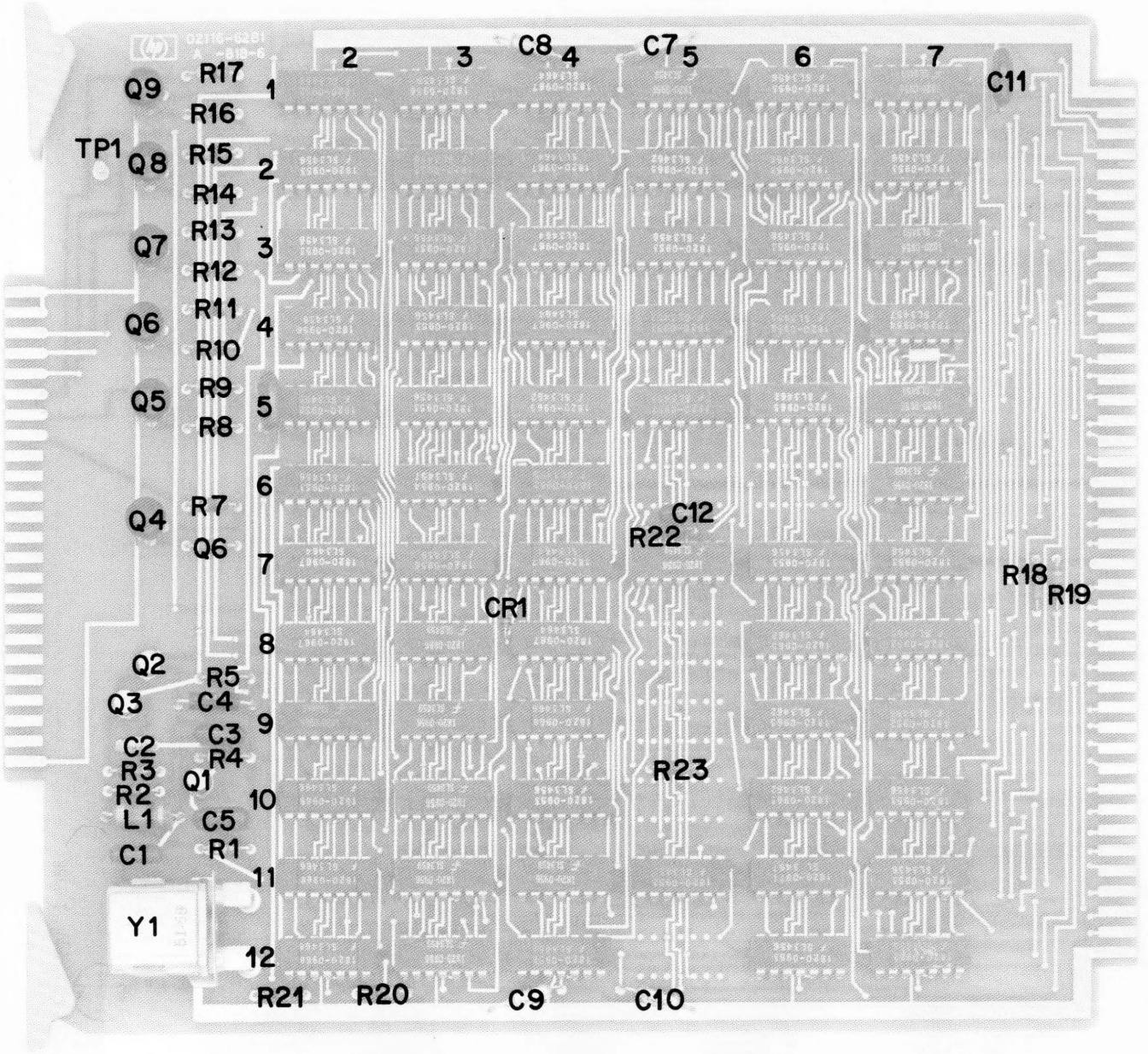

2116B SYSTEM TIMING GENERATOR

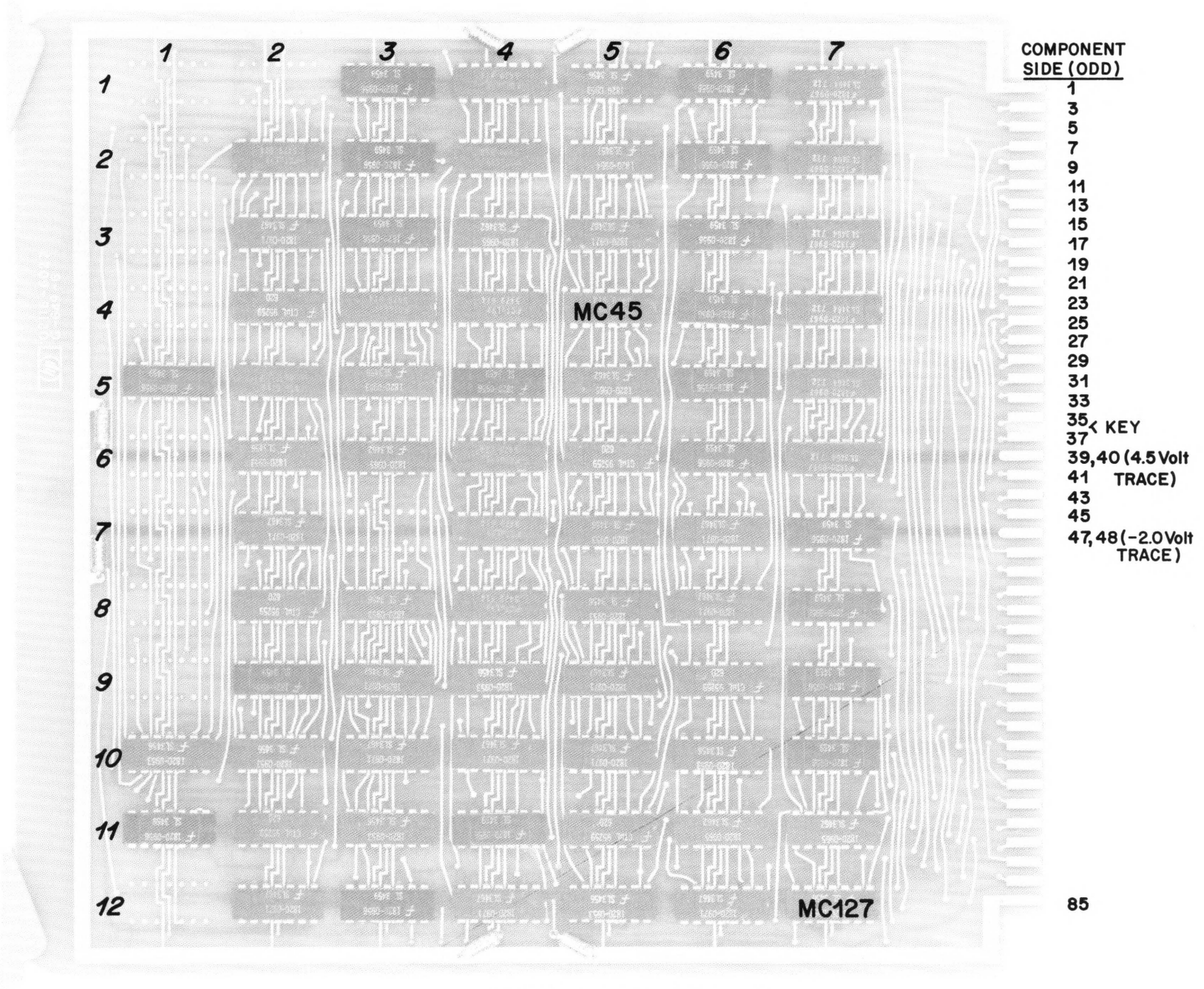

INSTRUCTION DECODER

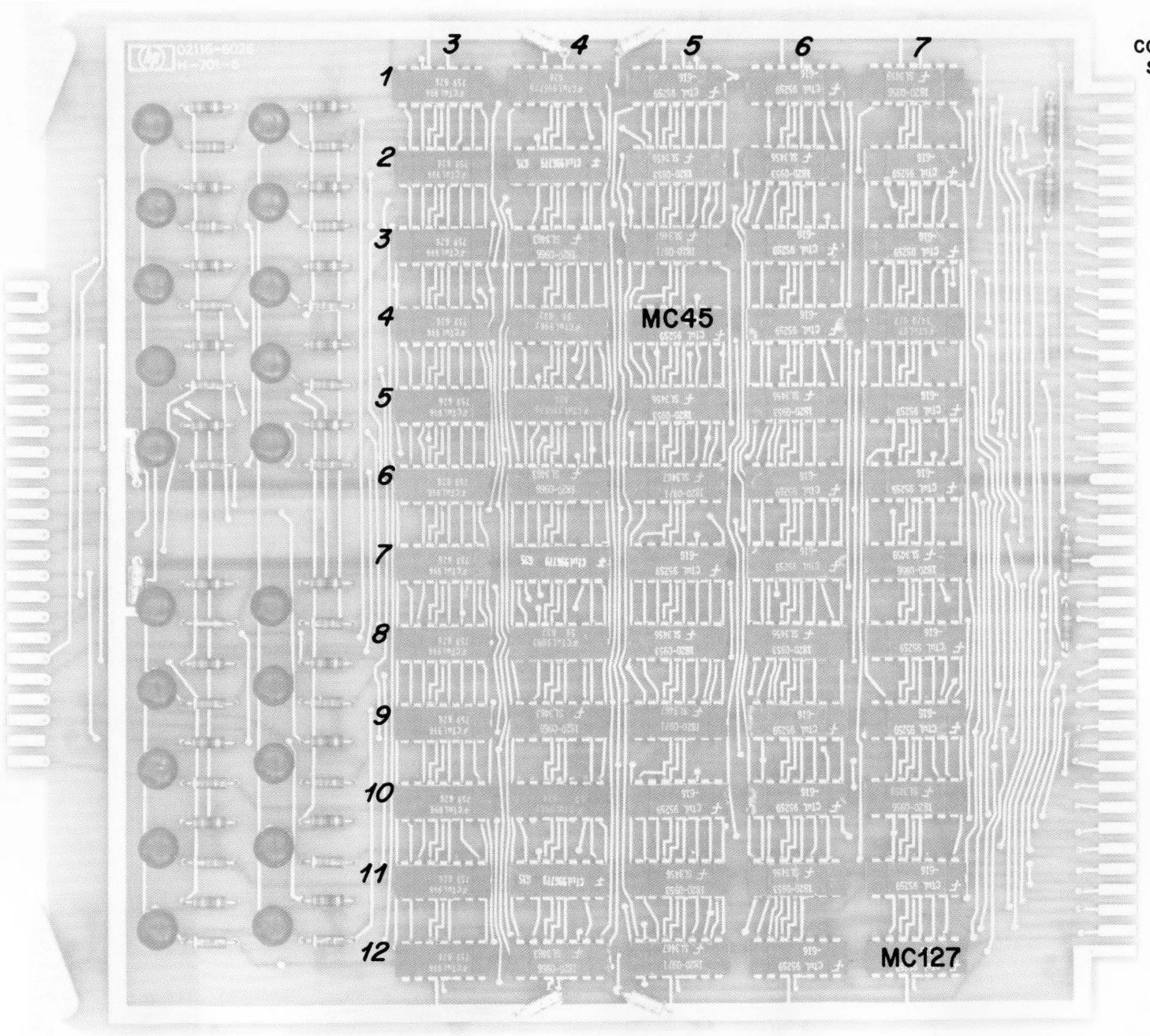

COMPONENT SIDE (ODD)

1
3
5
7
9
11
13
15
17
19
21
23
25
27
29
31
33
35
37 < KEY
39, 40 (4.5 Volt TRACE)
41
43
45
47, 48 (-2.0 Volt TRACE)

85

ARITHMETIC LOGIC BOARD

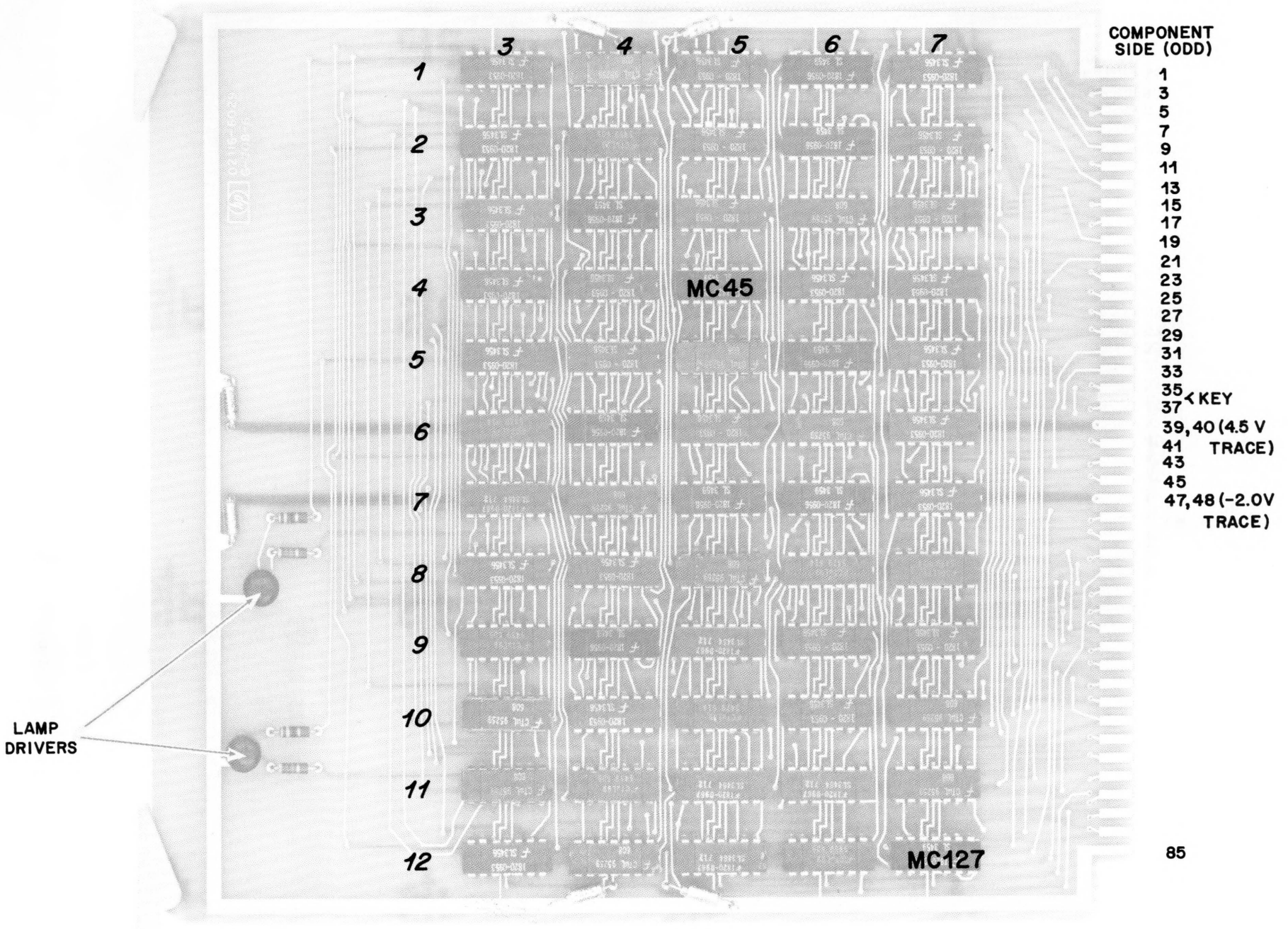
3
4
5
6
7
1
2
3
4
5
6
7
8
9
10
11
12
MC45
MC127
LAMP DRIVERS
COMPONENT SIDE (ODD)
1
3
5
7
9
11
13
15
17
19
21
23
25
27
29
31
33
35
37
< KEY
39,40 (4.5 V TRACE)
41
43
45
47,48 (-2.0V TRACE)
85

SHIFT LOGIC

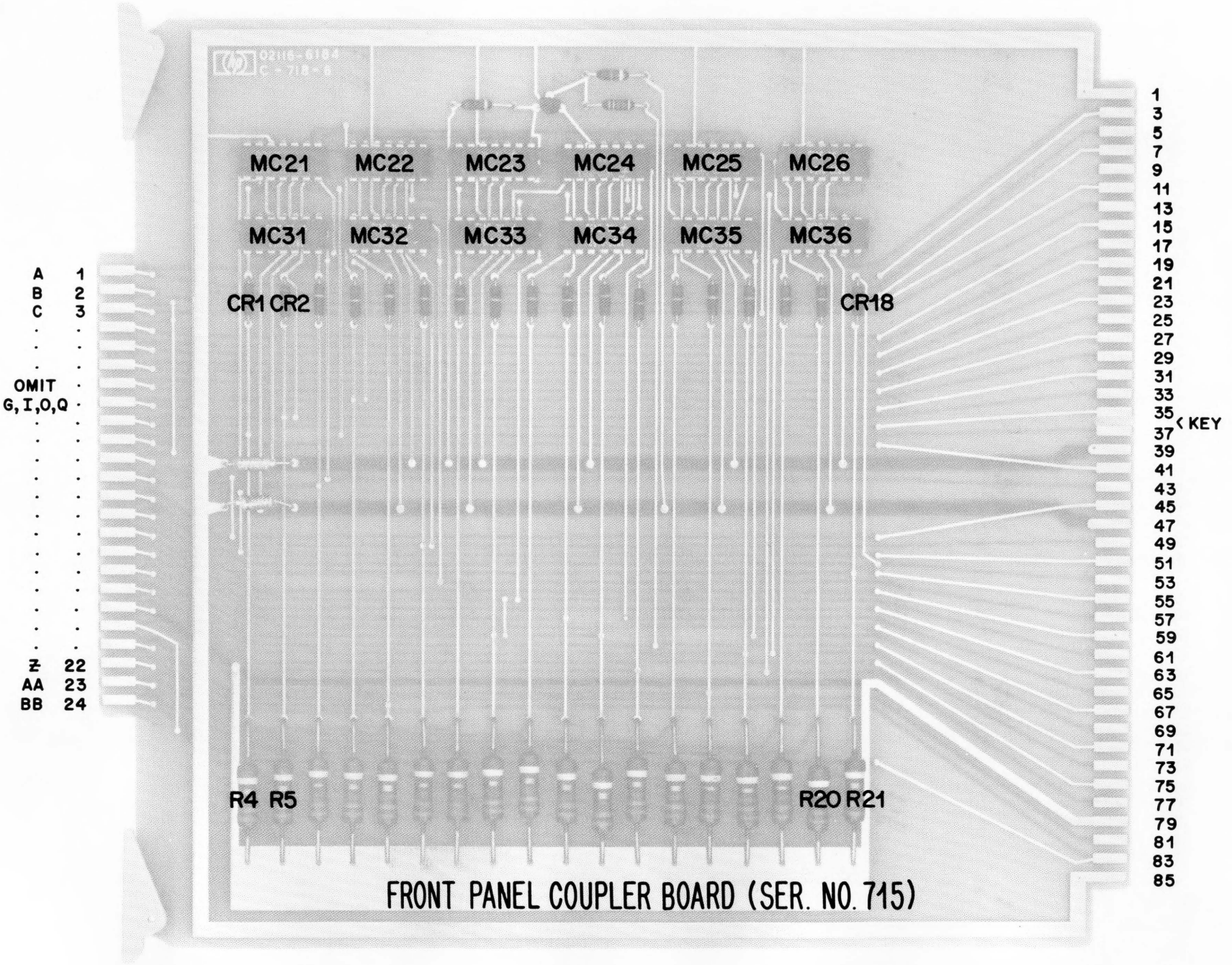

FRONT PANEL COUPLER BOARD (SER. NO. 715)

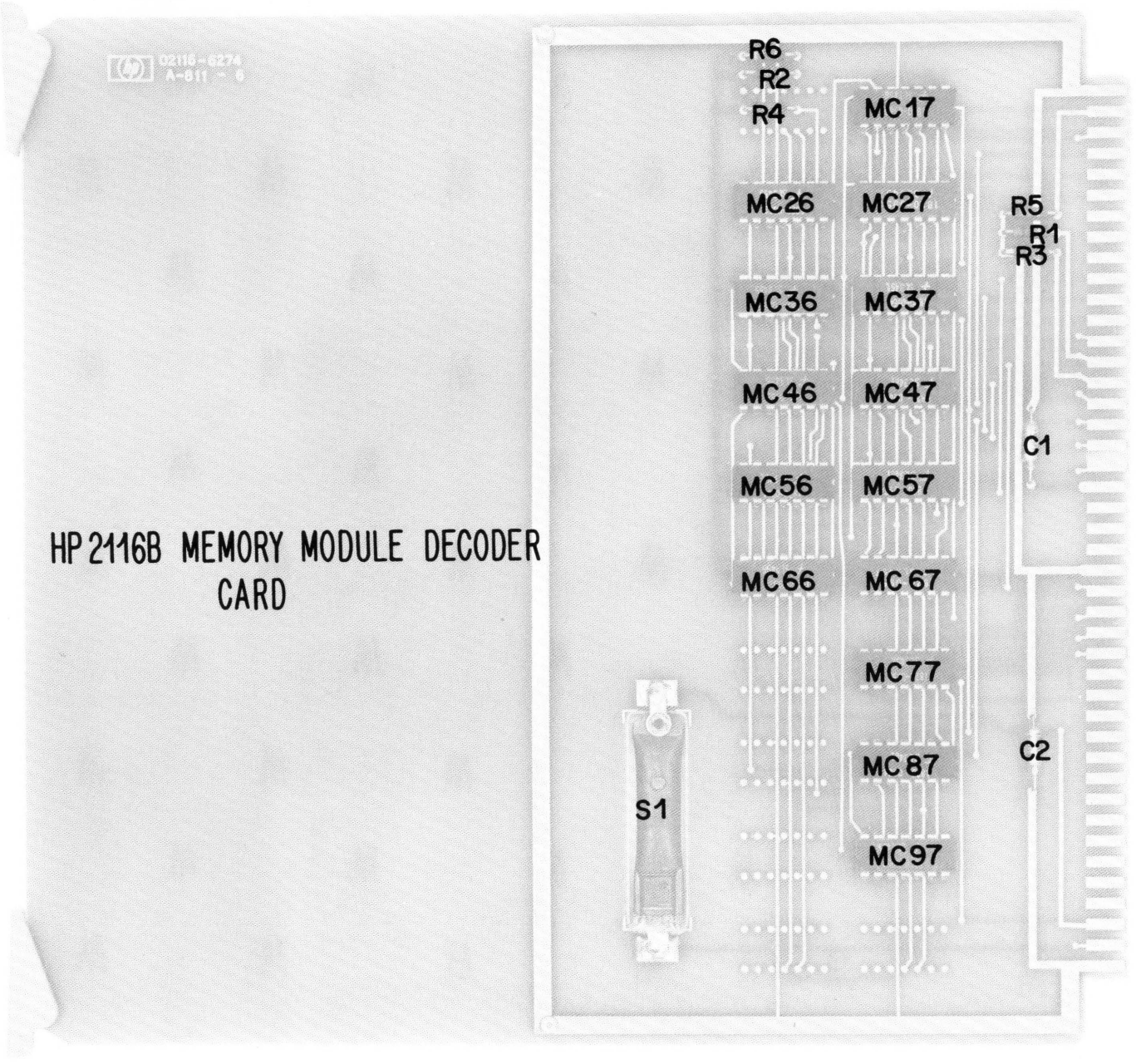

HP 2116B MEMORY MODULE DECODER CARD

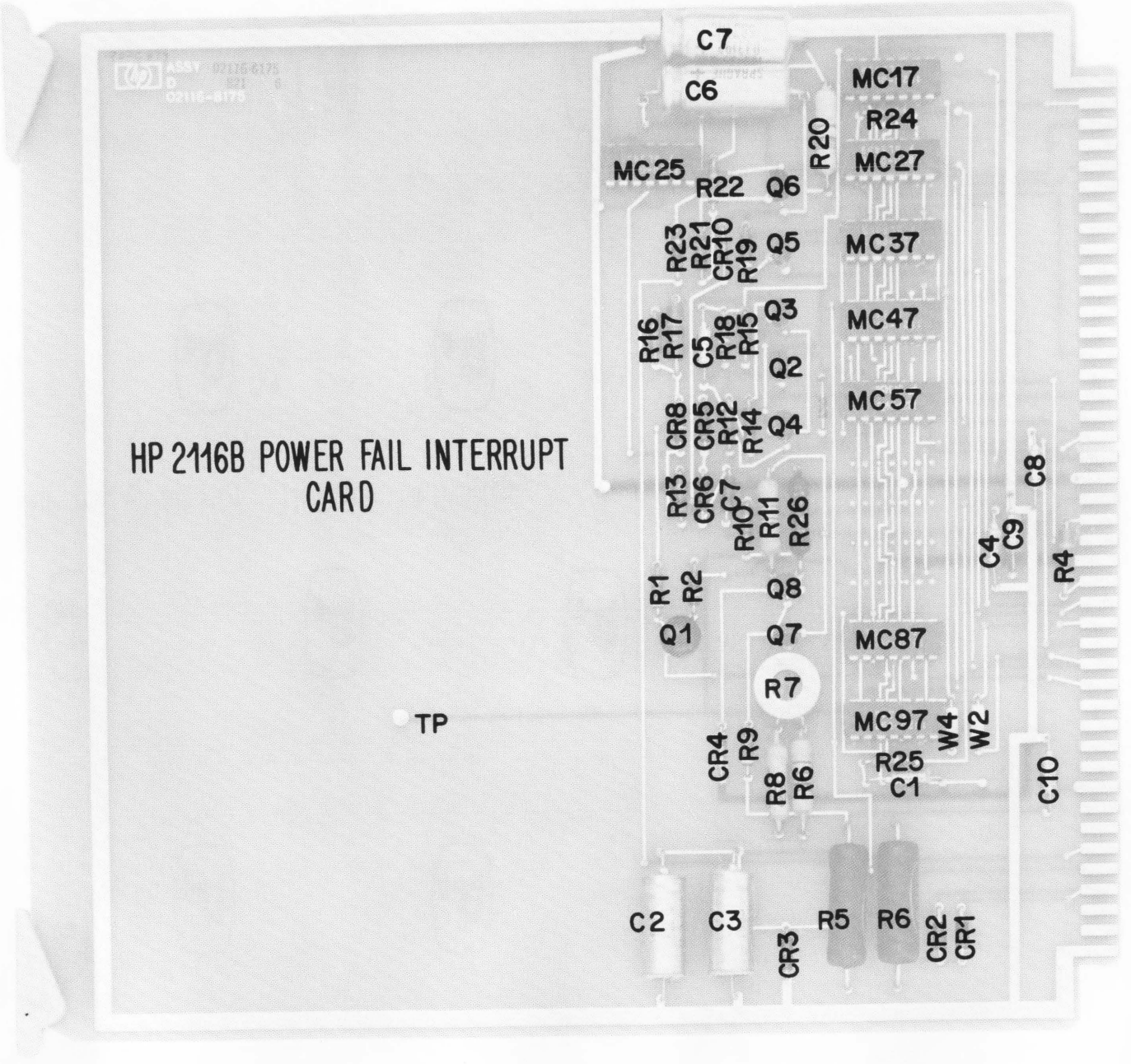
HP 2116B POWER FAIL INTERRUPT
CARD
C7
C6
MC17
R24
R20
MC27
MC25
R22
Q6
R23
R21
CR10
R19
Q5
MC37
R16
R17
C5
R18
R15
Q3
MC47
Q2
CR8
CR5
R12
R14
Q4
MC57
R13
CR6
C7
R10
R11
R26
C8
C4
C9
R4
R1
R2
Q8
Q1
Q7
MC87
R7
TP
MC97
W4
W2
CR4
R9
R25
C1
R8
R6
C10
C2
C3
R5
R6
CR3
CR2
CR1

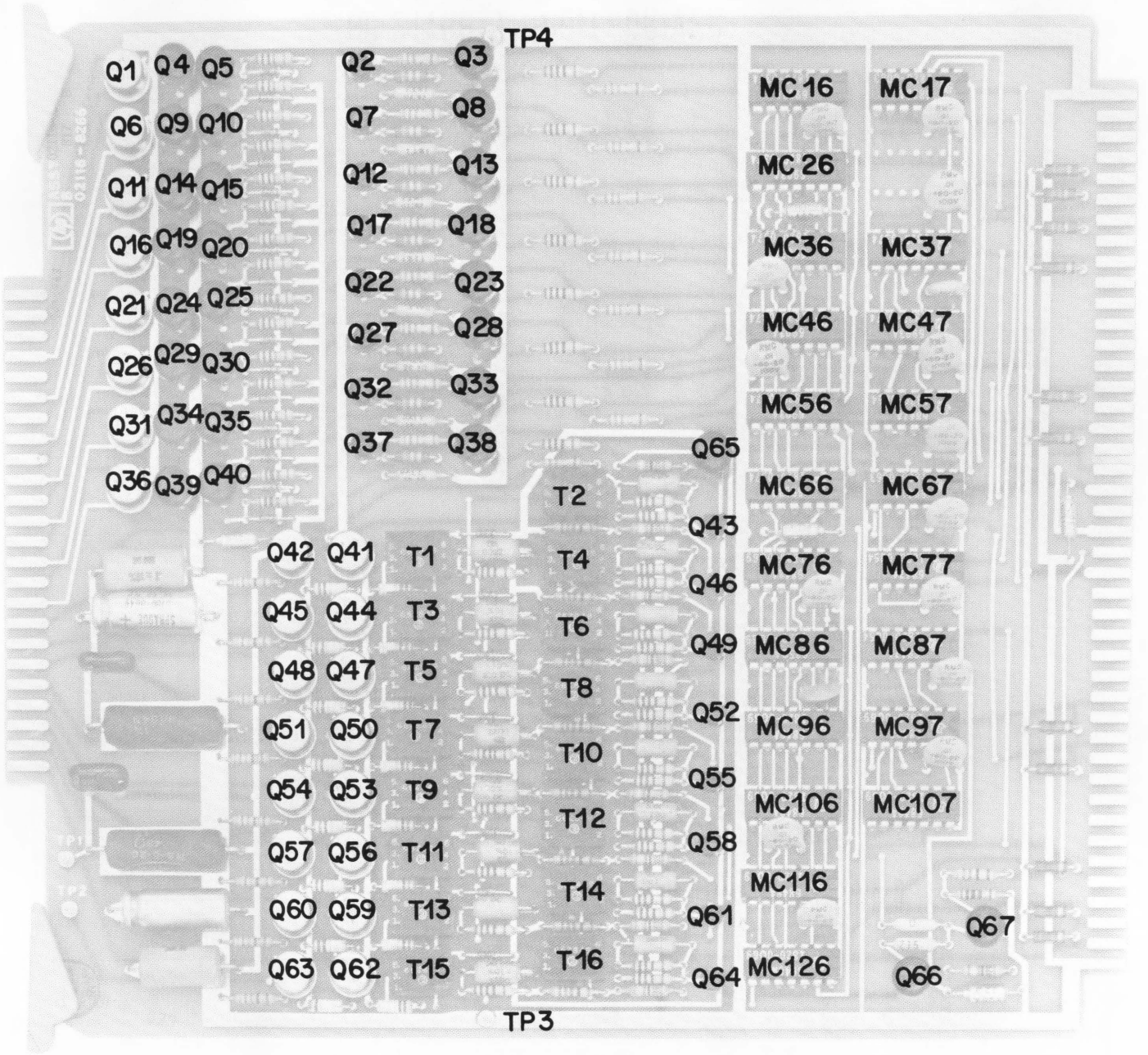

HP 2116B DRIVER/SWITCH CARD

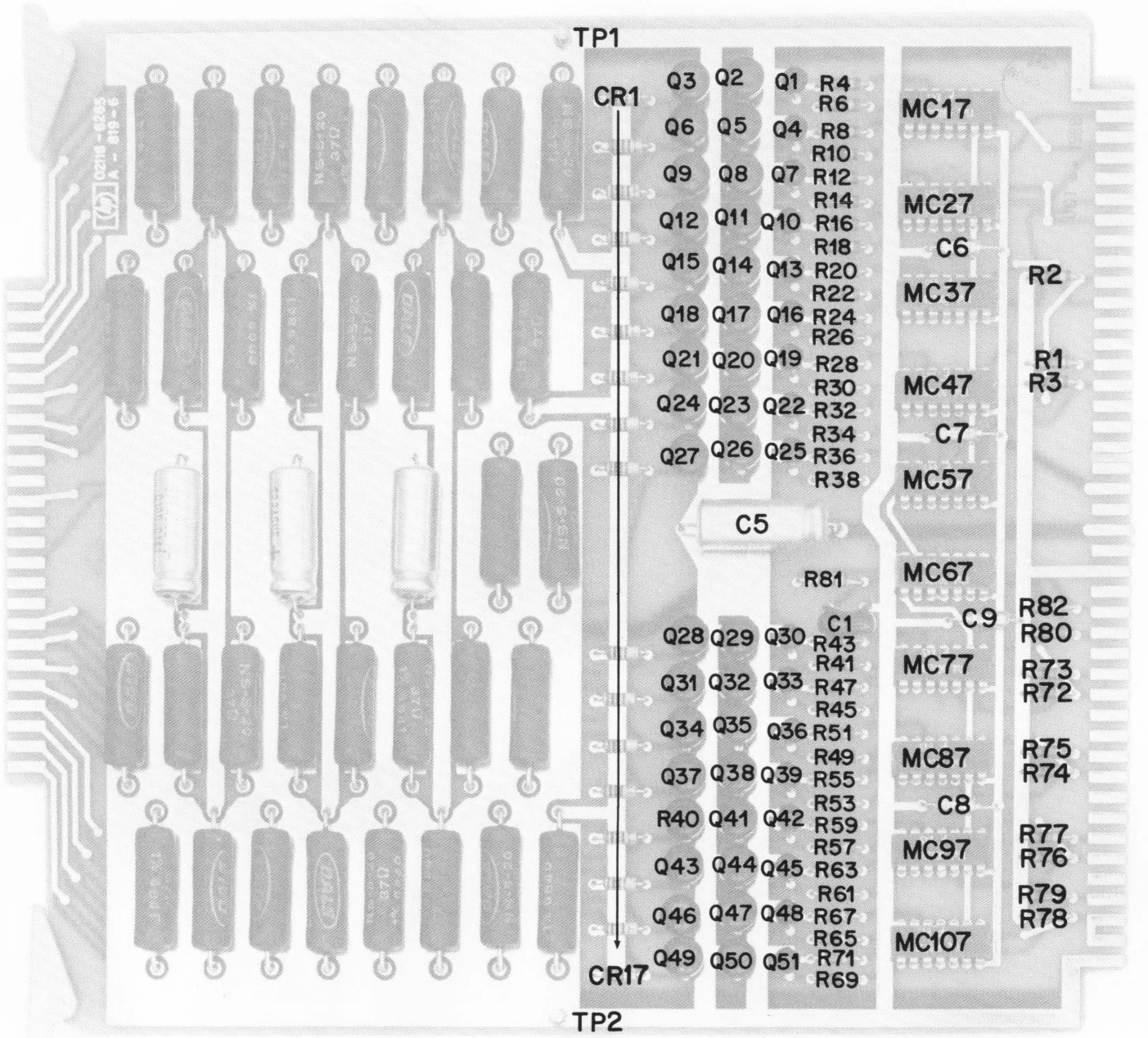

HP 2116B INHIBIT DRIVER

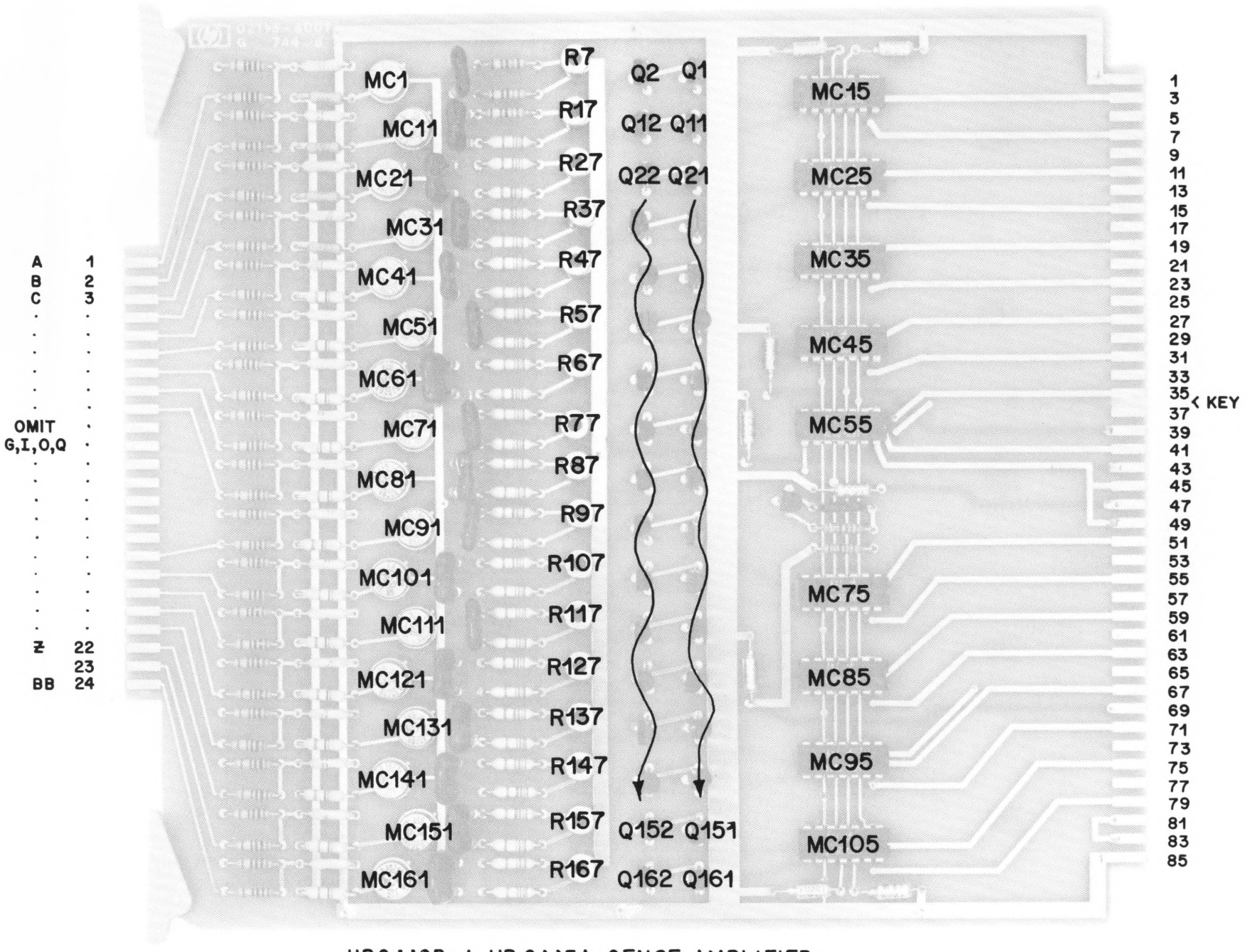

HP2116B / HP 2115A SENSE AMPLIFIER

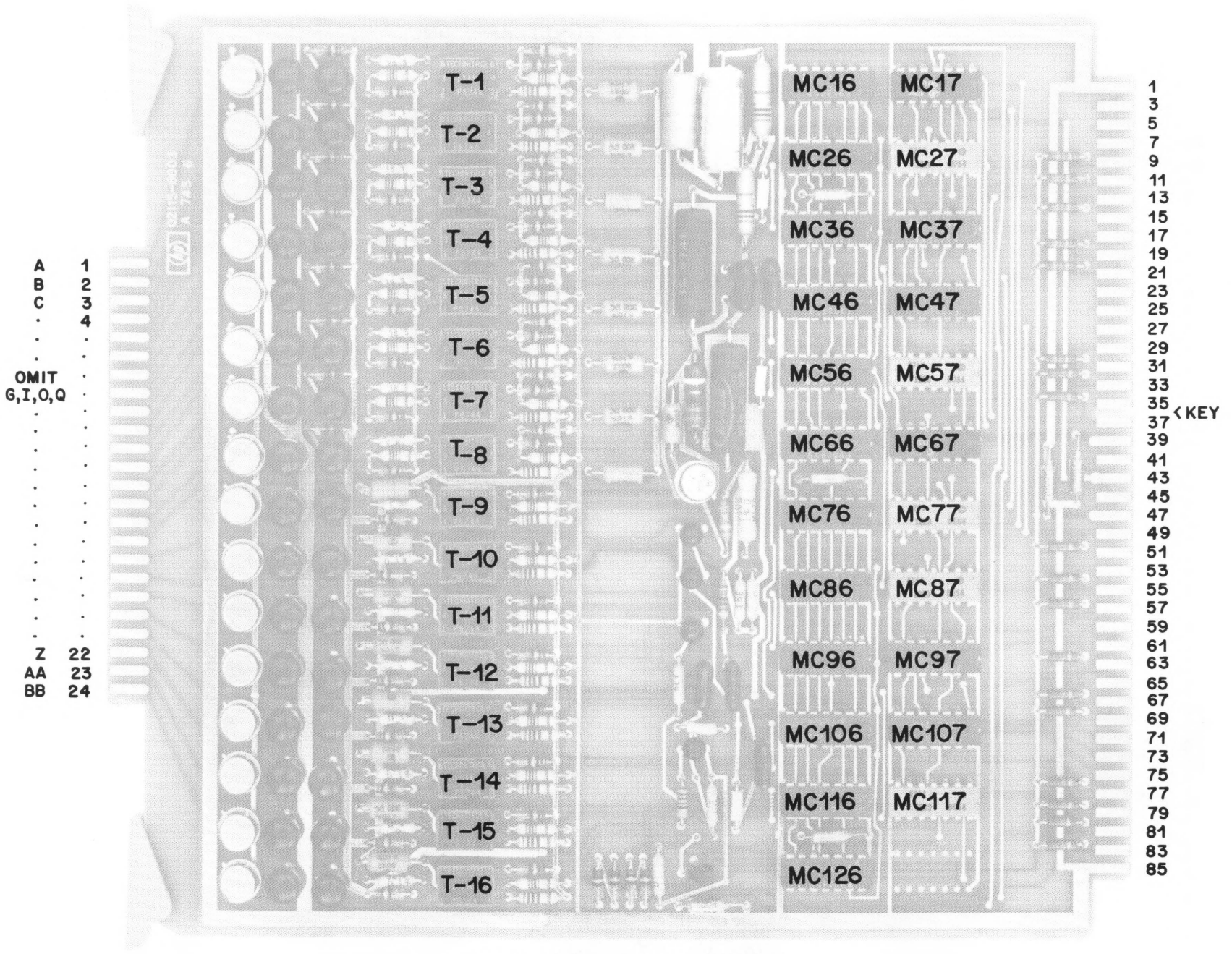

HP 2115A DRIVER/SWITCH

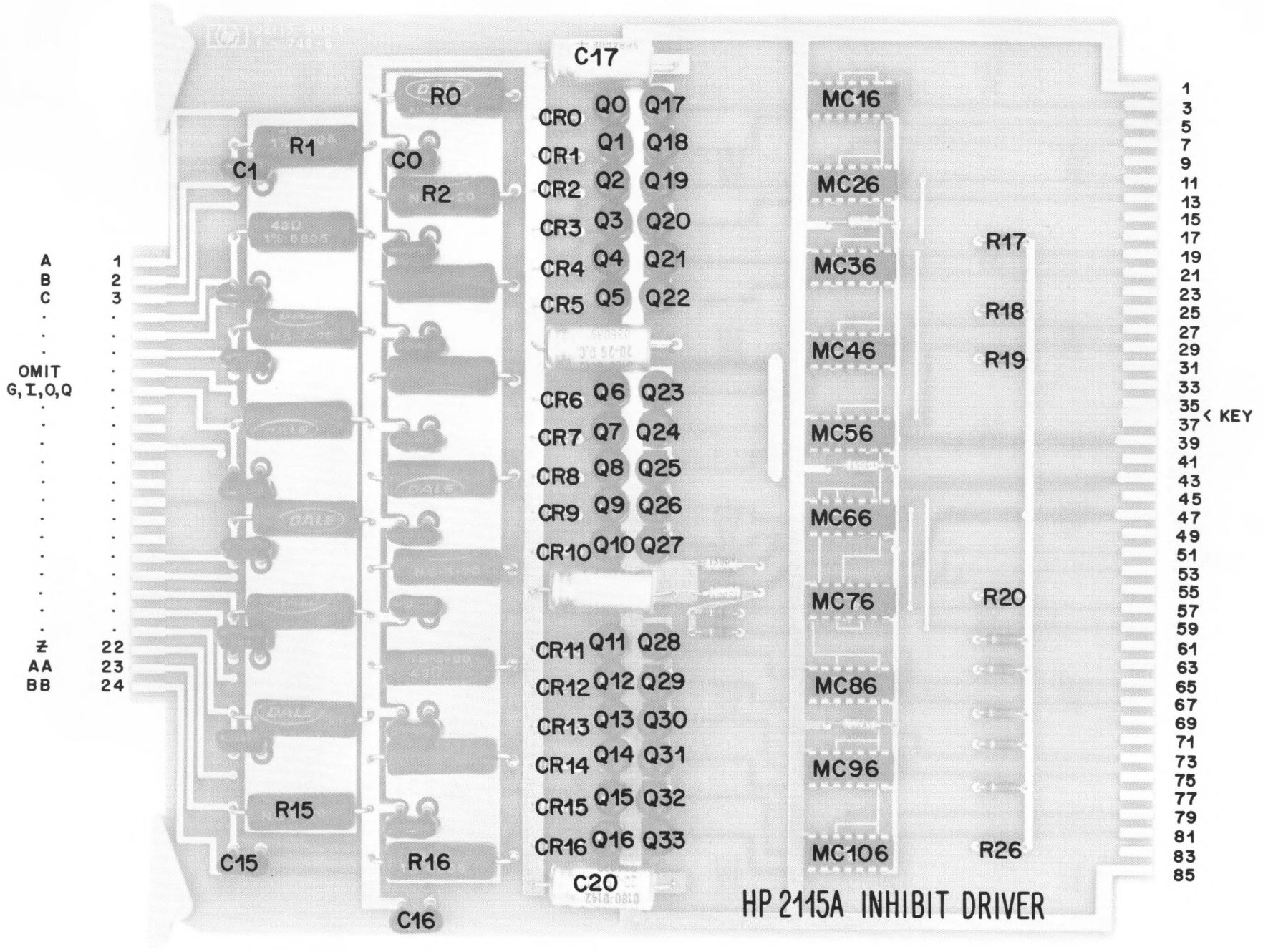
C17
R0
CR0 Q0 Q17
MC16
R1
C1
CO
CR1 Q1 Q18
R2
CR2 Q2 Q19
MC26
CR3 Q3 Q20
R17
A 1
B 2
C 3
CR4 Q4 Q21
MC36
CR5 Q5 Q22
R18
MC46
R19
OMIT
G,I,O,Q
CR6 Q6 Q23
CR7 Q7 Q24
MC56
CR8 Q8 Q25
CR9 Q9 Q26
MC66
CR10 Q10 Q27
MC76
R20
Z 22
AA 23
BB 24
CR11 Q11 Q28
CR12 Q12 Q29
MC86
CR13 Q13 Q30
CR14 Q14 Q31
MC96
R15
CR15 Q15 Q32
CR16 Q16 Q33
C15
R16
MC106
R26
C20
C16
HP 2115A INHIBIT DRIVER
1
3
5
7
9
11
13
15
17
19
21
23
25
27
29
31
33
35
37 < KEY
39
41
43
45
47
49
51
53
55
57
59
61
63
65
67
69
71
73
75
77
79
81
83
85

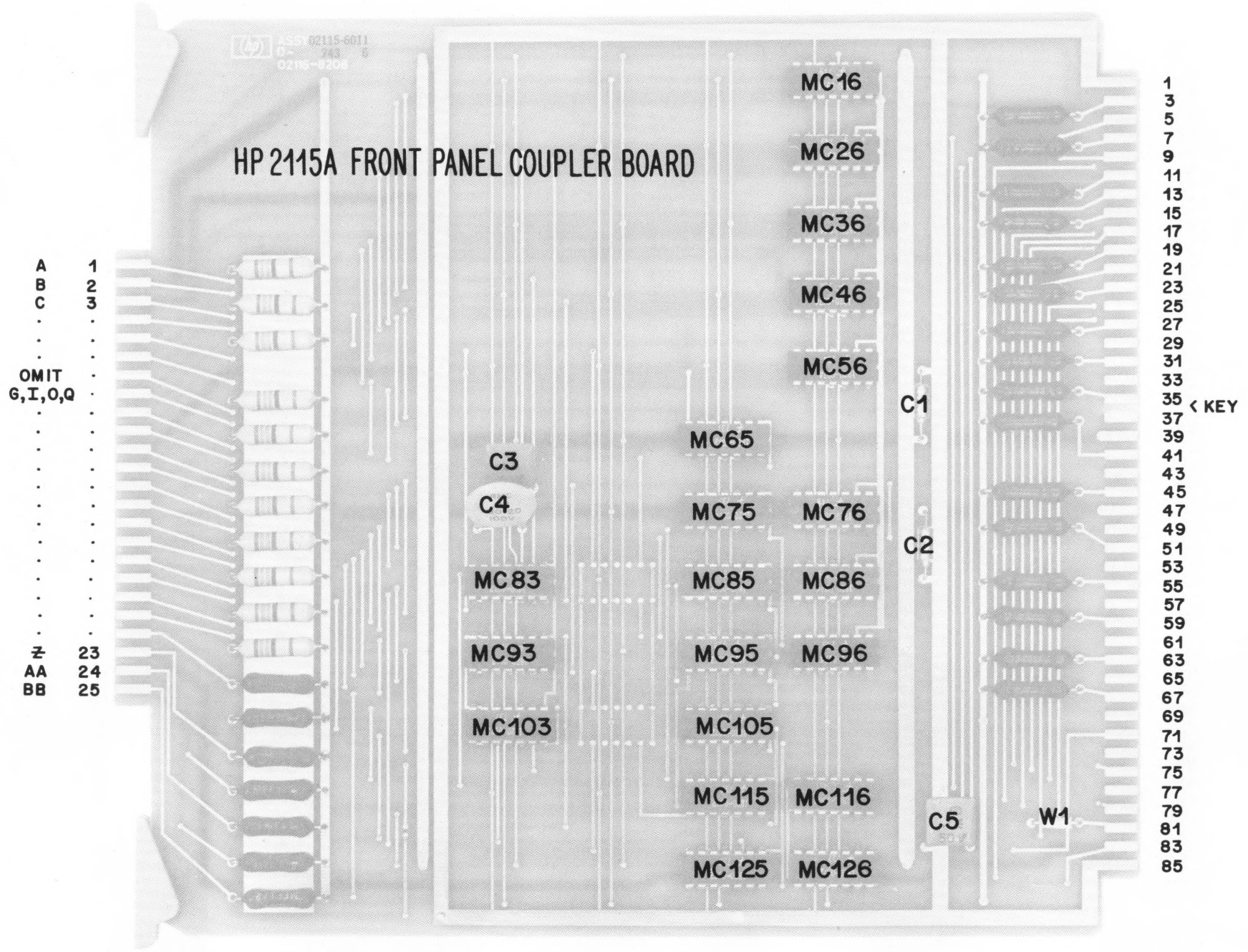
HP 2115A FRONT PANEL COUPLER BOARD
A 1
B 2
C 3
OMIT
G,I,O,Q
N 23
AA 24
BB 25
MC16
MC26
MC36
MC46
MC56
C1
MC65
C3
C4
MC75
MC76
C2
MC83
MC85
MC86
MC93
MC95
MC96
MC103
MC105
MC115
MC116
C5
W1
MC125
MC126
1
3
5
7
9
11
13
15
17
19
21
23
25
27
29
31
33
35
37
39
41
43
45
47
49
51
53
55
57
59
61
63
65
67
69
71
73
75
77
79
81
83
85
< KEY

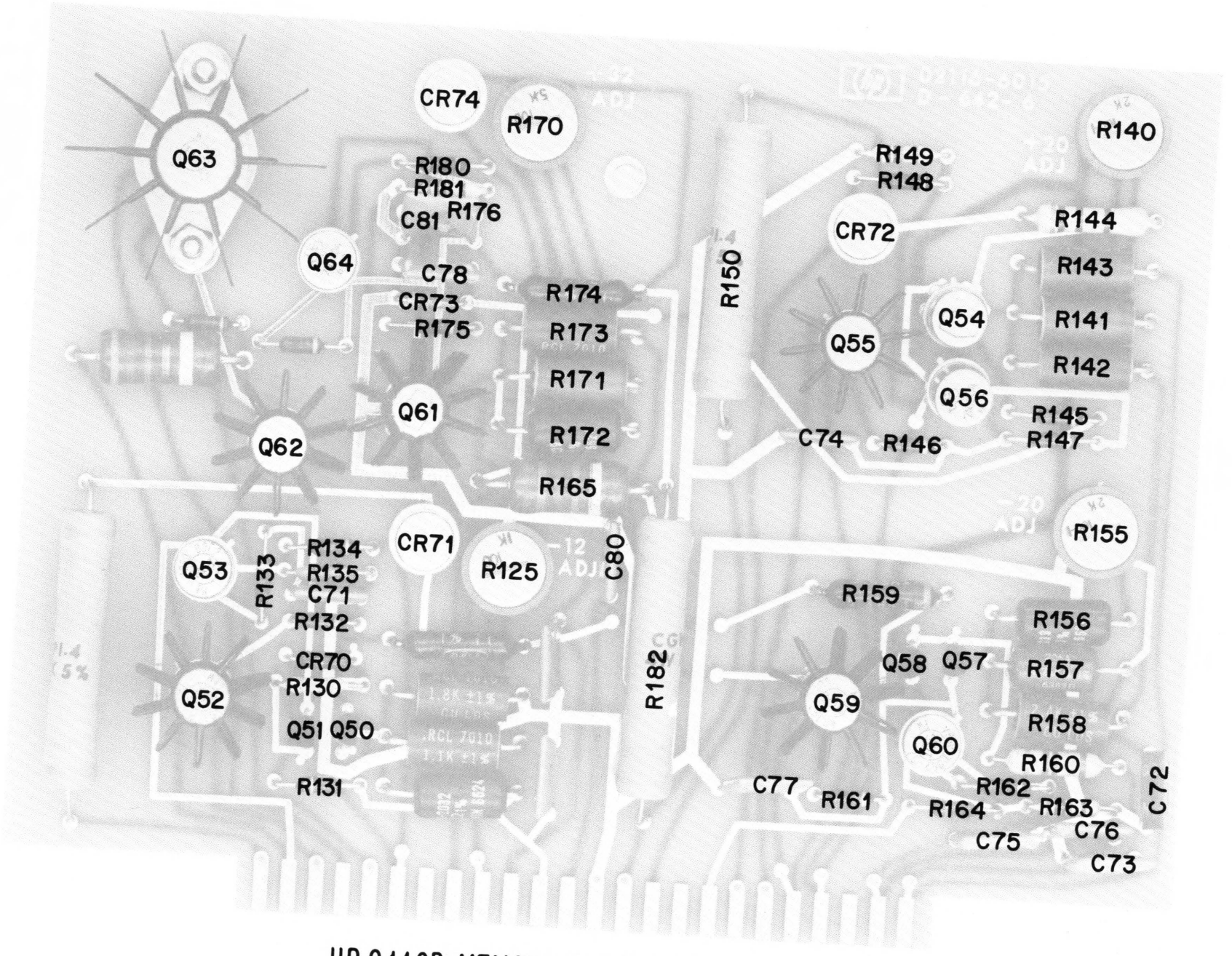

HP 2116B MEMORY SUPPLY REGULATOR

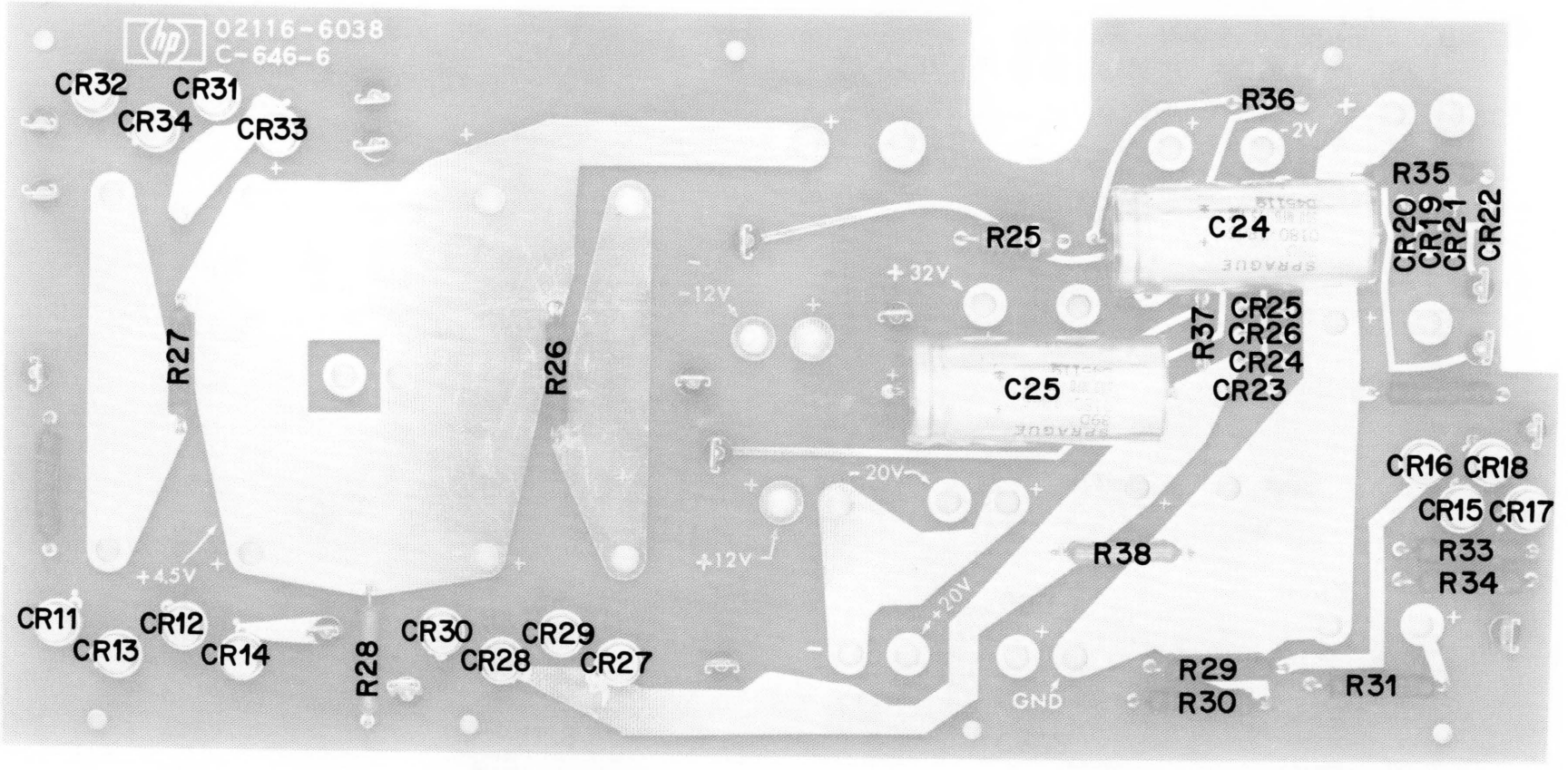

HP 2116B CAPACITOR BOARD (A303)

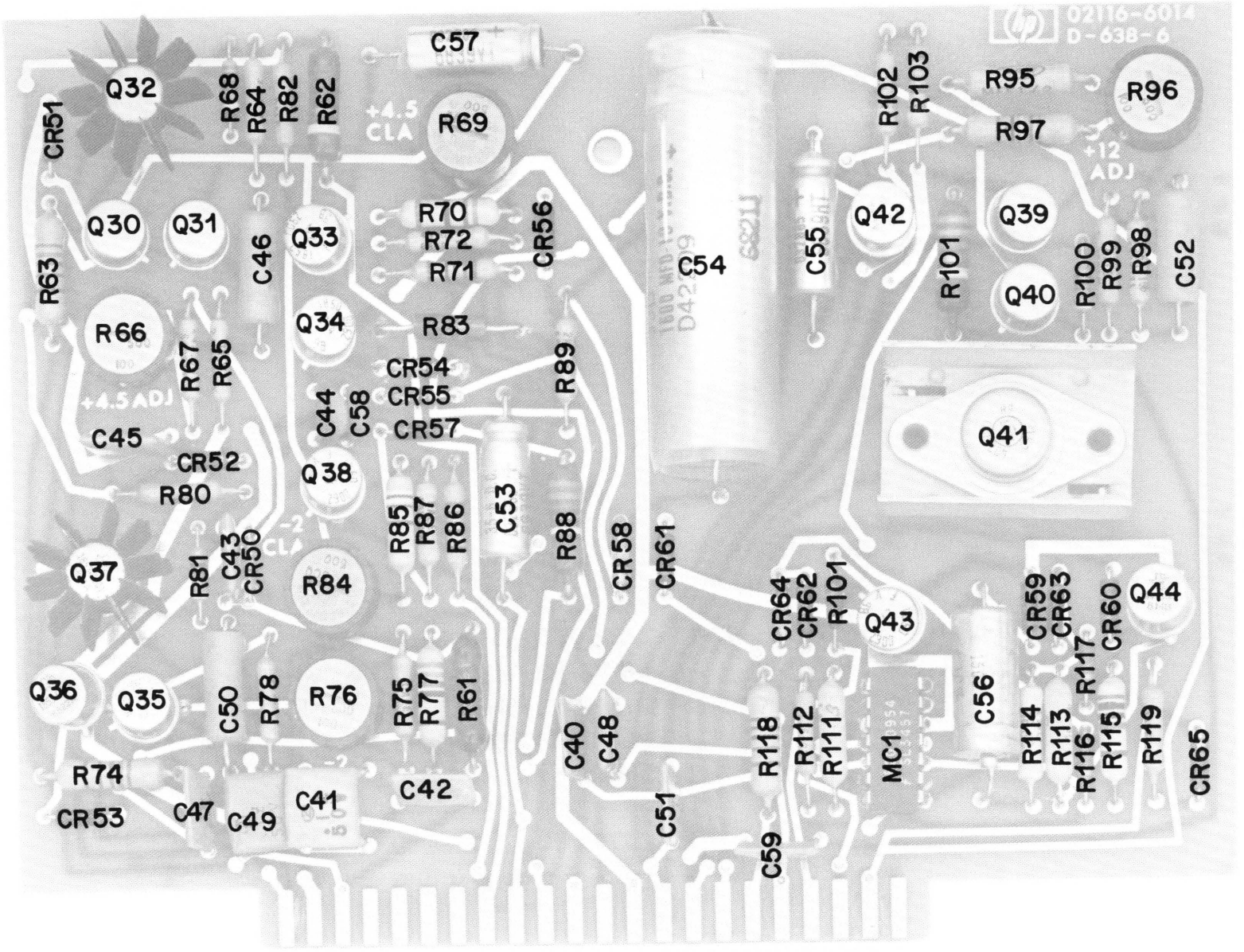

HP 2116B LOGIC SUPPLY REGULATOR
(A301)

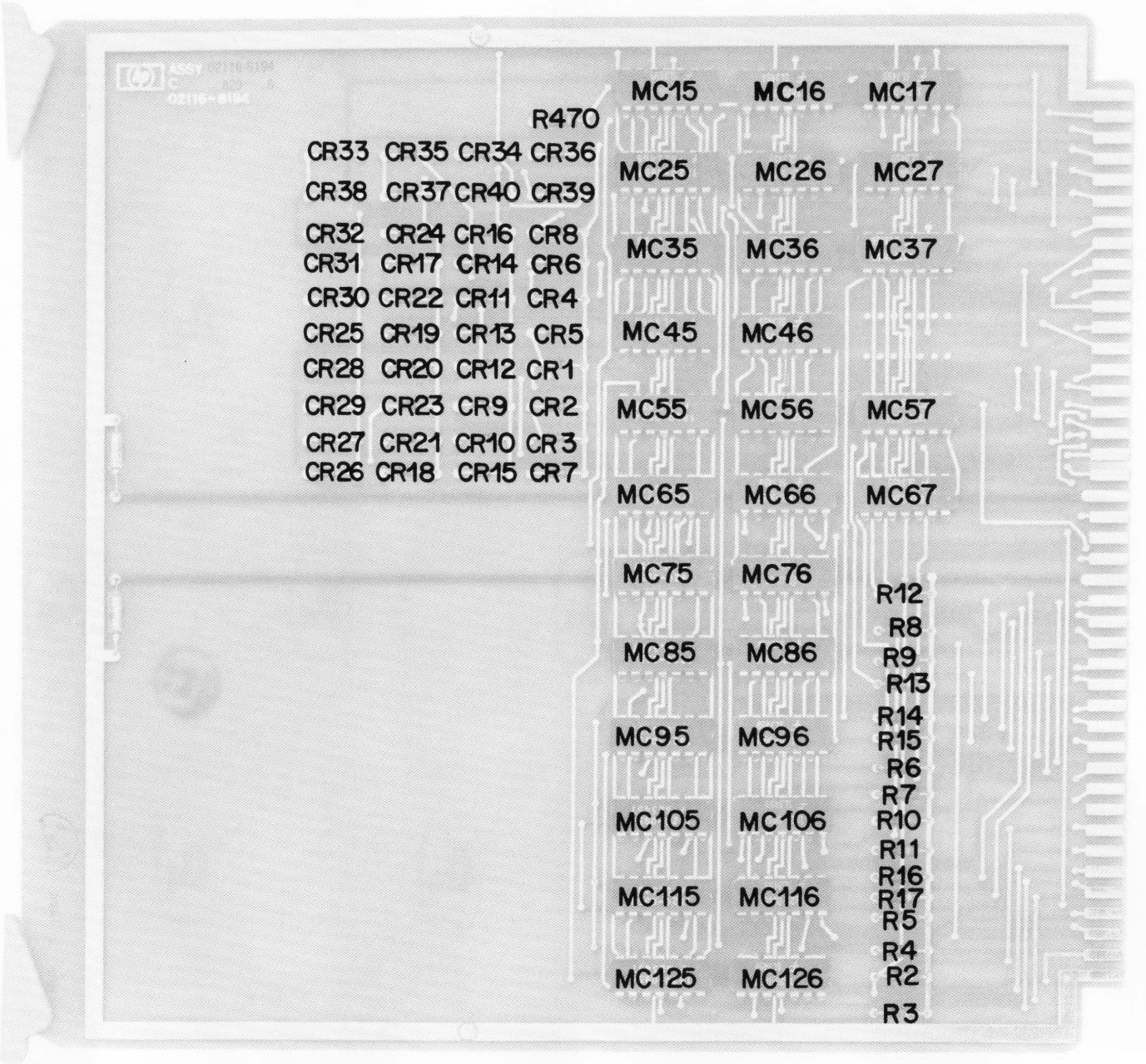

HP 2116B/2115A I/O ADDRESS CARD

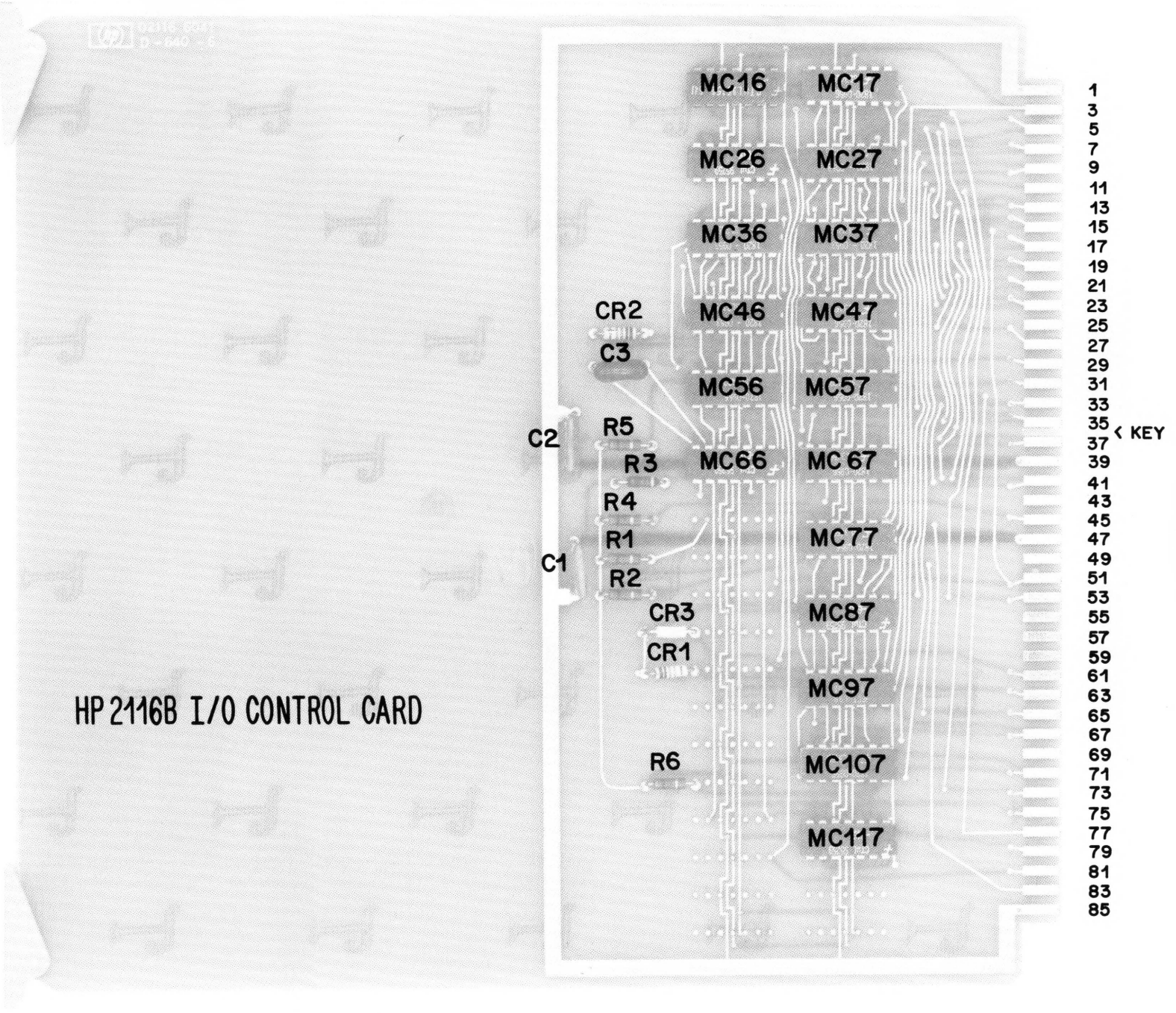

HP 2116B I/O CONTROL CARD

HP 2116B backplane wire list

IV

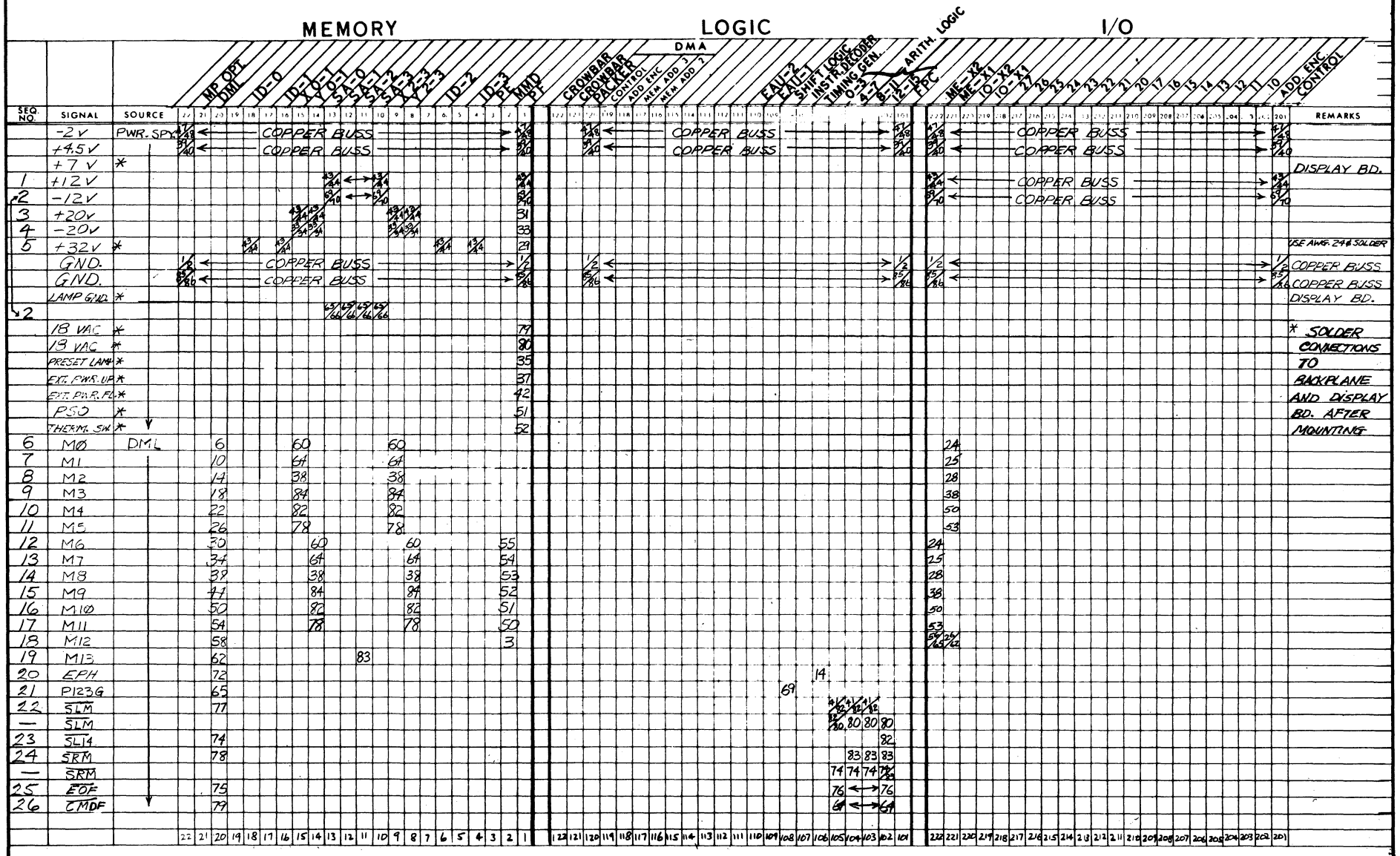

HP 2116B
BACKPLANE WIRE LIST

SEQ. NO.	SIGNAL	SOURCE	MEMORY: MP OPT. DML	ID-0	ID-1 X0-1	Q-1	3A-0	3A-1	3A-2	3A-3	X7-3	Z-3	ID-2	ID-3 PE	MMD PF	LOGIC: CROWBAR	CROWBAR PACKER	DMA CONTROL	ADD ENC	MEM ADD 3	MEM ADD 2	EAU-2	EAU-1	SHIFT LOGIC	INSTR. DECODER	TIMING GEN.	ARITH. LOGIC 0-3	4-7	8-11	12-15	FPC	I/O: ME-X2	ME-X1	IO-X2	IO-X1	27	26	25	24	23	22	21	20	17	16	15	14	13	12	11	10	ADD ENC CONTROL	REMARKS
27	+30V	PWR SPY.																														36																		36				
28	STF	ERS												18				16					15	5									9																9		41	
29	OVF. IND.																							9						4																							
30	IOO			57														56	30	8	8			13									20																20				
31	TRØ(B)																							15																											53		
32	CLF													51	7			14			51		24	19									7																7		51	
33	IOI			59										15				39/40	43/11	22	22			44			31			31			24																24				
34	E. IND.																							37						83																							
35	$\overline{RRS}$																							41			83																										
36	CLC.														21			60		18	18			53									21																21		75	
37	CØ																				43			71			67																										
38	AAF			17										49										77	47	75																											
39	TRØ(B)																							4																											83		
40	$\overline{SLME}$				70																			8																													
41	SFC														5			24						14									5																5		71	
42	HIN			55										69										26		66																											
43	$\overline{RL4}$																							28			78			78																							
44	$\overline{SRME}$				76																			32																													
45	IOCO																							34			70			70																							
46	$\overline{SL14E}$				67																			38																													
47	$\overline{RLL}$																							42						41																							
48	SFS																	20			31			54									25																25		69	
49	STC			41											22			58	17	20	20			56										22																22		61	
50	BAF			13										50										80	13	83																											
51	ISR	↓																						84						6																							
52	STP(Ø-11)	SRF																						74				44																									
53	ADD																						29	3																													
54	MAC																						62	5																													
55	STP(Ø-9)																							7			29/44	23/24	23																								
56	RSM(Ø-15)																							11					21	21/21																							
57	RARB																						65	19			34			34																							
58	STM(Ø-9)																							21				22	29																							
59	STM(10-11)																							27					22																							
60	STBB																							51			26			26																							
61	RBØ																						43	52	61		37																										
62	STBT																							63			51			51																							
63	$\overline{CMFE}$				81																			65																													
64	$\overline{EOFE}$				83																			67																													
65	ADF																	82					12	75			5			5																							
66	JMP	↓		11																				79	37																												
			22	21	20	19	18	17	16	15	14	13	12	11	10	9	8	7	6	5	4	3	2	1	122	121	120	119	118	117	116	115	114	113	112	111	110	109	108	107	106	105	104	103	102	101	222	221	220	219	218	217	216	215	214	213	212	211	210	209	208	207	206	205	204	203	202	201	

HP 2116B
BACKPLANE WIRE LIST

SEQ. NO.	SIGNAL	SOURCE	MEMORY: MP OPT DMI	ID-0	ID-1 XO-1 YO-1	SA-0 SA-1 SA-2 SA-3 XY2-3	ID-2	ID-3 PF	MMD PF	LOGIC: CROWBAR CROWBAR PACKER	DMA CONTROL	ADD ENC	MEM ADD 3	MEM ADD 2	EAU-2 EAU-1	SHIFT LOGIC	INSTR. DECODER	TIMING GEN.	0-3 4-7 8-11 12-15 ARITH. LOGIC	FPC	I/O: ME-X2 ME-X1 IO-X2 IO-X1	27	26	23	24	23	22	21	20	17	16	15	14	13	12	11	10	ADD ENC CONTROL	REMARKS
67	SBØ	SRF													44		81		42																					
68	STP(12-15)	↓															8				33/44																			
69	ASG															82	10																							
70	RSM (2MS) 6-9																12		21	14																	11			
71	OPØ																16	42																						
72	RBRB														58		18		28	↔	28																			
73	STM(Ø-5)																20		29/29	29																				
74	CPR															63	22																							
75	SRG															49	38																							
76	IRIS		33						4								42	49																						
77	STBA																50		38	↔	38																			
78	ANF																56		72	↔	72																			
79	RST																58		7	↔	7																			
80	STR																64	81																						
81	JSB																66	82																						
82	RMSB														34		68		8	↔	8																			
83	RPRB														4		72		12	↔	12																			
84	ISZ							44					69			61	76	24																						
85	RTSB												60		19		82		20	↔	20																			
86	IOF																84		73	↔	73																			
87	IOG	↓	16					59	38								6																							
88	PH4	STG.															83	13																				53		
89	T3 T4										30				74	7	70	15																						
90	T1 T2														51		52	21																						
91	P123		63 68					52								13	78	23																						
92	MIT			54	54 30 30		30 30	54	54									25				58																		
93	RPB							46										27																						
94	MRT	↓			18/18		18/18											29				58																		
95	TR6	RAF 4-7						58			15					66	3			56																				
96	STM (12-15)	SRF															28				32/29																	79		
97	PH2	STG.	49														53	37																						
98	PH1		21													81	44	41																				29		
99	T7S										10					23		51																						
100	T1		24												13	71	62	53																				23		
101	T5											1				74	45	55																				27		
102	POP IO							45					37					61																				63		
103	T3		23					23							32	75	45	43	63																			3		
104	T5														54	67	46	36	69																			45		
105	SWSB														10			24	71																					
106	SWSM														33			26	73																					
107	T4 T5									6	31				23		21	54	16																					
		↓	22 21	20	19 18	17	16 15	14 13	12 11	10 9	8 7	6 5	4 3	2 1	122 121	120 119	118 117	116 115	114 113	112 111	110 109	108 107	106 105	104 103	102 101	222 221	220 219	218 217	216 215	214 213	212 211	210 209	208 207	206 205	204 203	202 201		

HP 2116B
BACKPLANE WIRE LIST

SEQ. NO.	SIGNAL	SOURCE	MEMORY: MP OPT DMI	ID-0	ID-1 XO-1	SA-0 SA-1 SA-2 SA-3 XZ-3 YZ-3	ID-2	ID-3 PF	MMD PF	LOGIC: CROWBAR CROWBAR PACKER CONTROL	DMA: ADD ENC.	MEM ADD 3	MEM ADD 2	EAU-2 EAU-1	SHIFT LOGIC INSTR. DECODER TIMING GEN.	ARITH. LOGIC: 0-3 4-7 8-11 12-15 FPC	I/O: ME-X2 ME-X1 IO-X2 IO-X1	ADD. ENC. CONTROL	REMARKS
108	T7	STG	61					26		64		57		28	73	38 32	18		
109	T0											54		15	51	68 46	28		31
110	T6T7									73				11	14	72 69	30		
111	MST					41 41 41 41											32		
112	EIR															4	52	22	
113	T4													24	55	65 31	54		
114	$\overline{RF2}$								62						54		58	14	36
115	PH3							43				67				62 60	60		
116	SWST									83				20		34	62		
117	SWSP													3		37	64		
118	SEO														22	77	72		
119	T2													22	43	35 57	76		83
120	SWSA													66		35	84		
121	T0T1													36		80	17		
122	T6													30	60		11		
123	MWL		34					54									33		
124	MVIT	↓			12 12		12 12										35	83	
125	TR1	RAF0-3						83		5					30		9		84
126	$\overline{TR3}$			8	8		8	8 73								10	15	67	59
	$\overline{MR1}$																19		
127	MR3		18 16														25		
128	IOB03		3							45	35	34 34					35	55 45 ←	→ 45
129	TAN1															58	43		
130	TR2			14	14		14	14 74								33	53	74	66
131	IOB02		4							41	65	32 32					57	53 41 ←	→ 41
	$\overline{MR0}$																43		
132	MR2		8 12														65		
133	$\overline{TR1}$			4	4		4	4 81								27	10	72	80
134	TR3							75		9					32		16		60
135	MR1		10 8														18		
	$\overline{MR3}$																24		
136	C4																36 67		
137	IOB01		5							38	42	26 26					50	51 38 ←	→ 38
138	TR0			6	6		6	6 82								24	54	68	82
139	TR2							76		7					38	71	56		
140	TR0							84		3					37	12	58		
141	IOB00		6							35	21	24 24					60	47 35 ←	→ 35
	$\overline{MR2}$																66		
142	MR0	↓	14 4														68		

HP 2116B
BACKPLANE WIRE LIST

MEMORY

MP OPT. / DMI / ID-0 / ID-1 / X O-1 / Y O-1 / SA-0 / SA-1 / SA-2 / SA-3 / X 2-3 / Y 2-3 / ID-2 / ID-3 / PE / MMD / PF

LOGIC

CROWBAR / CROWBAR / PACKER / DMA: CONTROL / ADD ENC / MEM ADD 3 / MEM ADD 2 / EAU-2 / EAU-1 / SHIFT LOGIC / INSTR. DECODER / TIMING GEN. / ARITH. LOGIC: 0-3 / 4-7 / 8-11 / 12-15 / FPC

I/O

ME-X2 / ME-X1 / IO-X2 / IO-X1 / 27 / 26 / 25 / 24 / 23 / 22 / 21 / 20 / 17 / 16 / 15 / 14 / 13 / 12 / 11 / 10 / ADD. ENC. / CONTROL

SEQ. NO.	SIGNAL	SOURCE	22	21	20	19	18	17	16	15	14	13	12	11	10	9	8	7	6	5	4	3	2	1	122	121	120	119	118	117	116	115	114	113	112	111	110	109	108	107	106	105	104	103	102	101	222	221	220	219	218	217	216	215	214	213	212	211	210	209	208	207	206	205	204	203	202	201	REMARKS
143	TR5	RAF 4-7																				67					13											69					9																								58		
144	$\overline{TR7}$						20		20										20		20	55																	30	23			15					82																					
	$\overline{MR5}$																																										19																										
145	MR7			32	32																																						25																										
146	IOR07			20																							52			50	50												35							63	52	←													→	52			
147	$\underline{TAN\ 2}$																																						57				43																										
148	$\overline{TR6}$						28		28										28		28	56																	23	55			53					80																					
149	IOB06			22																							53			52	52												57							61	53	←													→	53			
—	$\overline{MR4}$																																										63																										
150	MR6			37	28																																						65																										
151	$\overline{TR5}$						12		12										12		12	65																	6				10					76																			79		
152	TR7																					57					17											83	11				16																										
153	MR5			42	24																																						18																										
—	$\overline{MR7}$																																										24																										
154	C8																																										36	67																									
155	IOB05			28																							51		61	42	42												50							59	51	←													→	51			
156	$\overline{TR4}$						22		22										22		22	66																	79				54					77																			78		
157	TR4																					68					11											72		25			58																								81		
158	IOB0 4			26																							42		63	36	36												60							57	42	←													→	42			
—	$\overline{MR6}$																																										66																										
157	MR4	↓		30	20																																						68																										
160	TR9	RAF 8-11																				31					43											61	17					9																									
161	$\overline{TR11}$						68		68										68		68	19																70	55					15			67																						
—	$\overline{MR9}$																																											19																									
162	MR 11			60	52																																							25																									
163	IOB011			52																							55			64	64													35						73	55	←													→	55			
164	TAN 3																																						60					43																									
165	$\overline{TR10}$						58		58										58		58	20																						53			74																						
166	IOB0 10			50																							58			66	66													57						71	58	←													→	58			
—	$\overline{MR8}$																																											63																									
167	MR10			58	46																																							65																									
168	$\overline{TR9}$						60		60										60		60	29																		57				10			72																						
169	TR11																					21					50											84	43	14				16																									
170	MR9			68	42																																							18																									
—	$\overline{MR11}$																																											24																									
171	C12																																											36	67																								
172	IOB0 9			54																							56			62	62													50						67	56	←													→	56			
173	$\overline{TR8}$						30		30										30		30	30																	36					54			68																						
174	TR10																					22					46													9				56																									
175	TR8																					32					34											78	18	29				58																									
176	IOB0 8			45																							54			56	56													60						65	54	←													→	54			
—	$\overline{MR10}$	↓																																										66																									

HP 2116B
BACKPLANE WIRE LIST

MEMORY

SEQ. NO.	SIGNAL	SOURCE	22	MP OPT 21	DML 20	19	ID-0 18	17	ID-1 16	X O-1 15	Y O-1 14	SA-0 13	SA-1 12	SA-2 11	SA-3 10	X 2-3 9	Y 2-3 8	7	ID-2 6	5	ID-3 4	PE 3	MMD 2	PF 1
177	MR 8	RAF 8-11		66	36																			
178	TR13	RAF 12-15																				13		
179	$\overline{\text{TR15}}$						82		82										82		82	3		
180	IOBO 15																							
181	TAN4																							
182	$\overline{\text{TR 14}}$						74		74										74		74	4		
183	IOBO 14			43																				
—	$\overline{\text{MR12}}$																							
184	MR 14			72	64																			
185	$\overline{\text{TR13}}$						76		76										76		76	11		
186	TR15																					5		
187	MR13			77	60																			
188	C16																							
189	IOBO13			46																				
190	$\overline{\text{TR12}}$						66		66										66		66	12		
191	TR14																					6		
192	TR12																					14		
193	IOBO 12			44																				
194	MR12			74	56																			
195	SB15																							
196	RB15																							
197	RB14	↓																						
198	TB 0	RAF 0-3																						
199	TB 1																							
200	TB 2																							
201	TB 3	↓																						
202	TB 4	RAF 4-7																						
203	TB5																							
204	TB6																							
205	TB7	↓																						
206	TB8	RAF 8-11																						
207	TB9																							
208	TB10																							
209	TB11	↓																						
210	TB12	RAF 12-15																						
211	TB13																							
212	TB14																							
213	TB15	↓																						
214	PEH	PE																				62		

LOGIC

SEQ. NO.	SIGNAL	CROWBAR 122	CROWBAR 121	PACKER 120	DMA CONTROL 119	DMA ADD ENC 118	DMA MEM ADD 3 117	DMA MEM ADD 2 116	115	114	113	112	111	EAU-2 110	EAU-1 109	SHIFT LOGIC 108	INSTR. DECODER 107	TIMING GEN. 106	ARITH. LOGIC 0-3 105	ARITH. LOGIC 4-7 104	ARITH. LOGIC 8-11 103	ARITH. LOGIC 12-15 102	FPC 101
177	MR 8																				68		
178	TR13			66													30					9	
179	$\overline{\text{TR15}}$																	36				15	
180	IOBO 15			74	51		78	78														35	
181	TAN4															59						43	
182	$\overline{\text{TR 14}}$																					53	
183	IOBO 14			65		15	76	76														57	
—	$\overline{\text{MR12}}$																					63	
184	MR 14																					65	
185	$\overline{\text{TR13}}$																					10	
186	TR15			70													41	38				16	
187	MR13																					18	
188	C16													50		64						36	
189	IOBO13			61	54		74	74														50	
190	$\overline{\text{TR12}}$																					54	
191	TR14			68													33					56	
192	TR12			62													17					58	
193	IOBO 12			57			68	68														60	
194	MR12																					68	
195	SB15															50						6	
196	RB15													77		66						30	
197	RB14													25								71	
198	TB 0													79		51			69			81	
199	TB 1															75			13			75	
200	TB 2															67			55			84	
201	TB 3															78			17	77		45	
202	TB 4																		81	69			
203	TB5																		75	13			
204	TB6																		84	55			
205	TB7																		45	17	77		
206	TB8																			81	69		
207	TB9																			75	13		
208	TB10																			84	55		
209	TB11																			45	17	77	
210	TB12															76					81	69	
211	TB13															73					75	13	
212	TB14															70					84	55	
213	TB15													80	64	20			77		45	17	
214	PEH																	57					

I/O

SEQ. NO.	SIGNAL	ME-X2 222	ME-X1 221	IO-X2 220	IO-X1 219	27 218	26 217	25 216	24 215	23 214	22 213	21 212	20 211	17 210	16 209	15 208	14 207	13 206	12 205	11 204	10 203	ADD. ENC. 202	CONTROL 201	REMARKS
177	MR 8																							
178	TR13																							
179	$\overline{\text{TR15}}$	82																						
180	IOBO 15				81	74	←													→	74			
181	TAN4																							
182	$\overline{\text{TR 14}}$	80																						
183	IOBO 14				79	65	←													→	65			
—	$\overline{\text{MR12}}$																							
184	MR 14																							
185	$\overline{\text{TR13}}$	76																						
186	TR15																							
187	MR13																							
188	C16																							
189	IOBO13				77	61	←													→	61			
190	$\overline{\text{TR12}}$	77																						
191	TR14																							
192	TR12																							
193	IOBO 12				75	57	←													→	57			
194	MR12																							
195	SB15																							
196	RB15																							
197	RB14																							
198	TB 0																					10		
199	TB 1																					9		
200	TB 2																					8		
201	TB 3																					7		
202	TB 4																					6		
203	TB5																					5		
204	TB6																							
205	TB7																							
206	TB8																							
207	TB9																							
208	TB10																							
209	TB11																							
210	TB12																							
211	TB13																							
212	TB14																							
213	TB15																							
214	PEH																							

HP 2116B
BACKPLANE WIRE LIST

MEMORY: MP OPT., DMI, ID-0, ID-1, X0-1, Y0-1, SA-0, SA-1, SA-2, SA-3, X2-3, Y2-3, ID-2, ID-3, PE, MMD, PF

SEQ. NO.	SIGNAL	SOURCE	22	21	20	19	18	17	16	15	14	13	12	11	10	9	8	7	6	5	4	3	2	1
	SRE	PE																				35		
215	PET																					61		
220	X0	MMD					52			14		45											4	
221	X1								52	10			45										6	
222	X 2													45		14			52				8	
223	X 3														45	10					52		12	
224	Y0/1										14												5	
225	Y2/3																14						10	
226	MPT	MMD																				34	82	
227	ST 0	S.A.0-3										3/4	↔	↔	3/4									
228	ST1											7/8	↔	↔	7/8									
229	ST2											11/12	↔	↔	11/12									
230	ST3											15/16	↔	↔	15/16									
231	ST4											19/20	↔	↔	19/20									
232	ST5											23/24	↔	↔	23/24									
233	ST6											27/28	↔	↔	27/28									
234	ST7											31/32	↔	↔	31/32									
235	ST8											35/36	↔	↔	35/36									
236	ST9											51/52	↔	↔	51/52									
237	ST10											55/56	↔	↔	55/56									
238	ST11											59/60	↔	↔	59/60									
239	ST 12											63/64	↔	↔	63/64									
240	ST 13											67/68	↔	↔	67/68									
241	ST 14											71/72	↔	↔	71/72									
242	ST 15											75/76	↔	↔	75/76									
		I/O CONTROL																						
243	IOGE (B)	I/O CONTROL																						15
244	T3 (B)																							
245	SIR			36																		37		32
246	IAK			56																		38		10
247	IEN (20)																							

LOGIC: CROWBAR, CROWBAR, PACKER, DMA: CONTROL, ADD ENC, MEM ADD 3, MEM ADD 2; EAU-2, EAU-1, SHIFT LOGIC, INSTR. DECODER, TIMING GEN., ARITH. LOGIC: 0-3, 4-7, 8-11, 12-15; FPC

SEQ. NO.	SIGNAL	SOURCE	122	121	120	119	118	117	116	115	114	113	112	111	110	109	108	107	106	105	104	103	102	101
	SRE	PE																						
215	PET																		7					
220	X0	MMD																						
221	X1																							
222	X 2																							
223	X 3																							
224	Y0/1																							
225	Y2/3																							
226	MPT	MMD																						
227	ST 0	S.A.0-3																		49/1				
228	ST1																			4/2				
229	ST2																			52/2				
230	ST3																			11/1				
231	ST4																				49/1			
232	ST5																				4/2			
233	ST6																				52/2			
234	ST7																				11/1			
235	ST8																					49/1		
236	ST9																					4/2		
237	ST10																					52/2		
238	ST11																					11/1		
239	ST 12																						49/1	
240	ST 13																						4/2	
241	ST 14																						52/2	
242	ST 15																						11/1	
		I/O CONTROL																						
243	IOGE (B)	I/O CONTROL				22	84	11	11															
244	T3 (B)							5	5															
245	SIR					34	70	53	53															
246	IAK					27			44															
247	IEN (20)																							

I/O: ME-X2, ME-X1, IO-X2, IO-X1, 27, 26, 25, 24, 23, 22, 21, 20, 17, 16, 15, 14, 13, 12, 11, 10, ADD. ENC., CONTROL

SEQ. NO.	SIGNAL	SOURCE	222	221	220	219	218	217	216	215	214	213	212	211	210	209	208	207	206	205	204	203	202	201	REMARKS
	SRE	PE																							
215	PET																								
220	X0	MMD																							
221	X1																								
222	X 2																								
223	X 3																								
224	Y0/1																								
225	Y2/3																								
226	MPT	MMD																							
227	ST 0	S.A.0-3		4/3																					* ST0 to
228	ST1			6/5																					ST15 wired
229	ST2			8/7																					with twisted
230	ST3			10/9																					pair. Signal
231	ST4			12/11																					wire is above
232	ST5			14/13																					the /. Ground
233	ST6			16/15																					wire is below
234	ST7			18/17																					the /.
235	ST8		4/3																						
236	ST9		6/5																						
237	ST10		8/7																						
238	ST11		10/9																						
239	ST 12		12/11																						
240	ST 13		14/13																						
241	ST 14		16/15																						
242	ST 15		18/17																						
		I/O CONTROL																							
243	IOGE (B)	I/O CONTROL			15	←														→	15	34	37	
244	T3 (B)				11	←														→	11		81	
245	SIR				32	←														→	32		35	
246	IAK				10	←														→	10		77	
247	IEN (20)				+		8	←				→	8	8/23										7	

HP 2116B
BACKPLANE WIRE LIST

SEQ. NO.	SIGNAL	SOURCE	MEMORY: MP OPT DML	ID-0	ID-1	X0-1	Y0-1	SA-0	SA-1	SA-2	SA-3	XZ-3	YZ-3	ID-2	ID-3	PF	MMD PF	LOGIC: CROWBAR	CROWBAR PACKER	DMA CONTROL	DMA ADD ENC	DMA MEM ADD 3	DMA MEM ADD 2	EAU-2	EAU-1	SHIFT LOGIC	INSTR. DECODER	TIMING GEN.	ARITH. LOGIC 0-3	4-7	8-11	12-15	FPC	I/O: ME-X2	ME-X1	IO-X2	IO-X1	27	26	25	24	23	22	21	20	17	16	15	14	13	12	11	10	ADD ENC CONTROL	REMARKS
248	IEN(6)	I/O SECT.		53																7			35																															5/10	
249	IEN(10)	I/O CONTROL																																												8							8	8	
250	CRS	" "																		32	74	49	9				68								13																13		65	
251	FLG Ø	I/O Sect.																		25			30																						4	4/49						4/49	14		
252	FLG 1	"																																		26	4/49	4/49					4/49	49								16		
253	FLG 2	"																																		28																13		
254	FLG 3	"																																		30																15		
255	SKF	I/O CONTROL															12			29			15				31								12																12		73	
256	ENF	" "													71		46			37	49														46																46		67	
257	INT	I/O ADDRESS		31											79		28											44																									3		
258	IOS	I/O CONTROL																								29	81																										6		
259	PHS	" "																																																			7	9	
260	ESR	" "																																																			12	21	
261	SCL(0)	I/O ADDRESS																			32														67		34							16	34						16	67	35	
262	SCL(1)	"		71																	80														71							16	34						16	34	67	42	
263	SCL(2)	"																			18		13												73						16	34						16	34		61		
264	SCL(3)	"																			82	13													75					16	34					16	34			63		
265	SCL(4)	"															16				38														77				16	34					16	34				51		
266	SCL(5)	"		12											9						79														79			16	34					16	34					52		
267	SCL(6)	"																		36	46														81		16	34					16	34						49		
268	SCL(7)	"																		38	50														83		16	34					16	34						50		
269	SCM(0)	"		9											7		14			18	51	14	14												55																75	36	
270	SCM(1)	"																			67																							14	14/37						14/37	77		
271	SCM(2)	"																			69																14	14/37					14/37	37						71		
272	SCM(3)	"																																	57		37														73		
273	SCM(4)	"																																	59																56		
274	SCM(5)	"																																	61																57		
275	SCM(6)	"																																	63																54		
276	SCM(7)	"																																	65																55		
277	IRQ1	I/O SECT.																																		50						6	33								17		
278	IRQ2	"																																		52					6	33									21		
279	IRQ3	"																																		54				6	33										23		
280	IRQ4	"															6																			56			6	33											27		
281	IRQ5	"		35											77																					58		6	33												29		
282	IRQ6	"																		28			29													60	6	33													25		
283	IRQ7	"																		26																62	6	33													19		
284	IRQ10	"																																		64	33												6	33		
285	IRQ11	"																																		66												6	33	35		
286	IRQ12	"																																		68											6	33		37		
287	IRQ13	"																																		72										6	33			18		
288	IRQ14	"																																		74									6	33				31		
289	IRQ15	"																																		76								6	33					20		
290	IRQ16	"																																		78							6	33						38		
			22	21	20	19	18	17	16	15	14	13	12	11	10	9	8	7	6	5	4	3	2	1	122	121	120	119	118	117	116	115	114	113	112	111	110	109	108	107	106	105	104	103	102	101	222	221	220	219	218	217	216	215	214	213	212	211	210	209	208	207	206	205	204	203	202	201	

HP 2116B
BACKPLANE WIRE LIST

SEQ. NO.	SIGNAL	SOURCE	MEMORY: MP OPT. DMI	ID-0	ID-1	KQ-0-1	SA-0	SA-1	SA-2	SA-3	XY2-3	ID-2	ID-3	PE	MMD	PF	LOGIC: CROWBAR	CROWBAR	PACKER	DMA CONTROL	DMA ADD ENC	DMA MEM ADD 3	DMA MEM ADD 2	EAU-2	EAU-1	SHIFT LOGIC	INSTR. DECODER	TIMING GEN.	0-3	4-7	8-11	12-15	ARITH. LOGIC	FPC	I/O: ME-X2	ME-X1	IO-X2	IO-X1	27	26	25	24	23	22	21	20	17	16	15	14	13	12	11	10	ADD. ENC. CONTROL	REMARKS
291	IRQ 17	I/O SECT.																																																						
292	PRH10																																																							
293	11/10																																																							
294	12/11																																																							
295	13/12																																																							
296	14/13																																																							
297	15/14																																																							
298	16/15																																																							
299	17/16																																																							
300	20/17																																																							
301	21/20																																																							
302	22/21																																																							
303	23/22																																																							
304	24/23																																																							
305	25/24																																																							
306	26/25																																																							
307	27/26																																																							
308	30/27																																																							
309	PRH5/PRL4		38										25		3				57																																					
310	6/5		51										27								33																																			
311	POPIO(B)	I/O Control	29															35																	17																		17		72
312	IOBI Ø	I/O Select	79														26			17	17							79				3			50	24																26	26	
313	1		80														29			25	25							32				7			52	27																29	24	
314	2		78														30			28	28							33				11			54	30																30	41	
315	3		75														69			58	58							27				15			56	64																64	45	
316	4		81														77			77	77									79		19			58	77																77	42	
317	5		82														80			80	80									32		23			60	80																80	30	
318	6		84														81			79	79									33		27			62	81																81		
319	7		83														84			81	81									27		31			64	84																84		
320	8		69														27			21	21										79	35			66	27																27		
321	9		65														28			19	19										32	41			68	28																28		
322	10		67														31			27	27										33	45			72	31																31		
323	11		62														60			47	49										27	51			74	60																60		
324	12		77														78			61	61											79	55		76	78																78		
325	13		73														79			75	75											32	51		78	79																79		
326	14		76														82				73											33	63		80	82																82		
327	15												28				83															27	61		82	83																83		
328	16																																		30	18																18		
329	SRQ 10																		22																																		19		
330	SRQ 11																		28																																	19			
331	SRQ 12																		20																																19			
332	SRQ 13																		26																														19					
333	SRQ 14																		33																												19							
			22	21	20	19	18	17	16	15	14	13	12	11	10	9	8	7	6	5	4	3	2	1	122	121	120	119	118	117	116	115	114	113	112	111	110	109	108	107	106	105	104	103	102	101	222	221	220	219	218	217	216	215	214	213	212	211	210	209	208	207	206	205	204	203	202	201	

* PRL (17)

HP 2116B
BACKPLANE WIRE LIST

SEQ NO.	SIGNAL	SOURCE	MEMORY: MP OPT DMI	ID-0	ID-1 XO-1	YO-1	SA-0	SA-1	SA-2	SA-3	XZ-3	YZ-3	ID-2	ID-3	PF	MMD PF	LOGIC: CROWBAR	CROWBAR	PACKER	DMA: CONTROL	ADD ENC	MEM ADD 3	MEM ADD 2	EAU-2	EAU-1	SHIFT LOGIC	INSTR. DECODER	TIMING GEN.	ARITH. LOGIC: 0-3	4-7	8-11	12-15	FPC	I/O: ME-X2	ME-X1	IO-X2	IO-X1	27	26	25	24	23	22	21	20	17	16	15	14	13	12	11	10	ADD. ENC CONTROL	REMARKS
334	SRQ 15	I/O SEC'Y.																		44																										19										
335	SRQ 16																			29																										19										
336	SRQ 17																			37																										19										
337	SRQ 20																			71																										19										
338	SRQ 21																			66																										19										
339	SRQ 22																			68																										19										
340	SRQ 23																			64																										19										
341	SRQ 24																			58																										19										
342	SRQ 25																			54																										19										
343	SRQ 26																			56																										19										
344	SRQ 27																			52																										19										
345	IOBO 16																																			83	73	←													→	73			
		↓																																																						
347	HIS	DMA																		83																																			4	
348	EDT	DMA																	42																	3	62	←													→	62			
349	IOGE	PF		19												59									16																													33	
350	PNS	FPC																									43					18																								
351	MNS														74																	22																								
352	ILS	↓																								73						26																								
353	PON	PF					46	46			46	46				58																71			41	66	←													→	66			
354	POFP	PF														56											77					10																								
355	PRS	FPC														78											78					37																								
356	$\overline{PRS}$																										79					34																								
	$\overline{RNS}$																																																							
358	RNS															60											70					44																								
359	$\overline{HLS}$																										45					50																								
360	HLS															72											50					54																								
361	LMS																										46					58				59	←													→	59			
362	LAS																										80					62																								
363	LBS																										65					66																								
364	LADS																										68					70																								
365	DMS																										59					74																								
366	SCS																										56					78																								
367	LPS														49																	82																								
368	PIND	↓														47																75																								
369	-SV	PF														75																79																								
370	R SET	EAU																							63	42																													
371	DS3																								67	28																													
372	DS4																								52	9																													
373	DS34																								14	6																													
374	DT58																								71	27																													
375	STOO																								83	31																													
376	MD2	↓																							16	79																													
			22	21	20	19	18	17	16	15	14	13	12	11	10	9	8	7	6	5	4	3	2	1	122	121	120	119	118	117	116	115	114	113	112	111	110	109	108	107	106	105	104	103	102	101	222	221	220	219	218	217	216	215	214	213	212	211	210	209	208	207	206	205	204	203	202	201	

HP 2116B
BACKPLANE WIRE LIST

SEQ. NO.	SIGNAL	SOURCE	MEMORY: MP OPT DML	ID-0	ID-1 X0-1	Y0-1	SA-0	SA-1	SA-2	SA-3	X2-3	Y2-3	ID-2	ID-3 PE	MMD PF	LOGIC: CROWBAR	CROWBAR PACKER	DMA CONTROL	ADD ENC	MEM ADD 3	MEM ADD 2	EAU-2	EAU-1	SHIFT LOGIC	INSTR. DECODER	TIMING GEN.	ARITH. LOGIC 0-3	4-7	8-11	12-15	FPC	I/O: ME-X2	ME-X1	IO-X2	IO-X1	27	26	25	24	23	22	21	20	17	16	15	14	13	12	11	10	ADD. ENC CONTROL	REMARKS
377	ISG	EAU																3											4																								
378	OVD																					56	80																														
379	ROT5																					68	82																														
380	EOFR																					31	5																														
381	RSDS			15										72									65																														
382	T23																					21	35																														
383	MP1																					59	12																														
384	MP2																					5	11																														
385	MP3																					69	4																														
386	MP4																					46	3																														
387	MP5																					9	8																														
388	D1																					62	34																														
389	D2																					60	33																														
390	D3																					27	26																														
391	D4																					6	25																														
392	D5																					73	17																														
393	D6																					8	18																														
394	TOD																					72	45																														
395	TEV																					81	56																														
396	OVR																					35	22																														
397	$\overline{OVR}$																					61	16																														
398	RO																					75	46																														
399	AS																					84	50																														
400	RT																					57	52																														
401	$\overline{RT}$																					78	58																														
402	EXIT																					17	74																														
403	GAT																					76	59																														
404	DL3																					70	57																														
405	DL4																					18	36																														
406	SLMH				73																		44																														
407	SRMH				61																		41																														
408	SL4H				84																		49																														
409	EOFH				82																	26																														
410	CMFH				80																	72																														
411	IIR	↓		69	71																		77					6																								
412	MPC	PE		25										63	36																																						
413	DMØ	MADD2,3			3														41	41																																
414	DM1				7														46	46																																
415	DM2				11														45	45																																
416	DM3				15														55	55																																
417	DM4				19														65	65																																
418	DM5				23														63	63																																
419	DM6	↓			27														71	71																																
			22	21	20	19	18	17	16	15	14	13	12	11	10	9	8	7	6	5	4	3	2	1	122	121	120	119	118	117	116	115	114	113	112	111	110	109	108	107	106	105	104	103	102	101	222	221	220	219	218	217	216	215	214	213	212	211	210	209	208	207	206	205	204	203	202	201	

HP 2116B
BACKPLANE WIRE LIST

SEQ. NO.	SIGNAL	SOURCE	MEMORY: MP OPT DML	ID=0	ID=1	Y0=1	SA=0	SA=1	SA=2	SA=3	Y2=3	ID=2	ID=3	PE	MMD PF	LOGIC: CROWBAR	CROWBAR	PACKER	DMA CONTROL	ADD ENC	MEM ADD 3	MEM ADD 2	EAU=2	EAU=1	SHIFT LOGIC	INSTR. DECODER	TIMING GEN.	O=3	4=7	8=11	12=15	ARITH. LOGIC	FPC	I/O: ME=X2	ME=X1	IO=X2	IO=X1	27	26	25	24	23	22	21	20	17	16	15	14	13	12	11	10	ADD ENC. CONTROL	REMARKS
420	DM7	MADD2,3																																																							
421	DM8																																																								
422	DM9																																																								
423	DM10																																																								
424	DM11																																																								
425	DM12																																																								
426	DM13																																																								
427	DM14																																																								
	$\overline{PH5}$	DMA CONTROL																																																						
428	PH5				7	69									8					8	78		70						53																										17	
429	IODO																			19	4																																			
430	COUT																				63	36																																		
431	OUT																				65	6																																		
432	CM1																				67	7																																		
433	SMAR2																				69		38																																	
434	CR2	AD. ENC.																			71	27																																		
435	DIN1																				75			4																															
436	WCR1	MADD-2																			77			84																															
437	SWCR2	DMA CONTL.																			79		3																																	
	IN																				52																																			
438	TE1																				66	60																																		
439	CM2																				68	81																																		
440	CIN	AD. ENC.																			70	41																																		
441	SMAR1	DMA CONTL.																			72			38																																
442	DIN2	MADD-3																			74		4																																	
443	WCR2																				76		84																																	
444	CR1	AD. ENC.																			78	34																																		
445	SWCR1	DMA CNTL.																			80			3																																
446	TE2																				62	62																																		
	TR0(B)	PACKER																		4																																				
	TR1(B)																			6																																				
	TR2(B)																			8																																				
	TR3(B)																			10																																				
	TR4(B)																			12																																				
	TR5(B)	PACKER																		14																																				
	TR6(B)																			16																																				
	TR7(B)																			18																																				
	TR8(B)																			33																																				
	TR9(B)																			37																																				
	TR10(B)																			44																																				
	TR11(B)																			49																																				
			22	21	20	19	18	17	16	15	14	13	12	11	10	9	8	7	6	5	4	3	2	1	122	121	120	119	118	117	116	115	114	113	112	111	110	109	108	107	106	105	104	103	102	101	222	221	220	219	218	217	216	215	214	213	212	211	210	209	208	207	206	205	204	203	202	201	
	TR12(B)																										59																															
	TR13(B)																										63																															
	TR14(B)																										67																															

HP 2116B
BACKPLANE WIRE LIST

MEMORY: MP OPT., DML, ID-0, ID-1, XY 0-1, SA-0, SA-1, SA-2, SA-3, XY 2-3, ID-2, ID-3, PE, MMD, PF

LOGIC: CROWBAR, CROWBAR, PACKER, DMA (CONTROL, ADD ENC, MEM ADD 3, MEM ADD 2), EAU-2, EAU-1, SHIFT LOGIC, INSTR. DECODER, TIMING GEN., ARITH. LOGIC (0-3, 4-7, 8-11, 12-15), EPC

I/O: ME-X2, ME-X1, IO-X2, IO-X1, 27, 26, 25, 24, 23, 22, 21, 20, 17, 16, 15, 14, 13, 12, 11, 10, ADD. ENC., CONTROL

SEQ. NO.	SIGNAL	SOURCE	22	21	20	19	18	17	16	15	14	13	12	11	10	9	8	7	6	5	4	3	2	1	122	121	120	119	118	117	116	115	114	113	112	111	110	109	108	107	106	105	104	103	102	101	222	221	220	219	218	217	216	215	214	213	212	211	210	209	208	207	206	205	204	203	202	201	REMARKS
	TR15B	PACKER																									69																																											
447	OHC1	ADD. ENC.																									20		10																																									
448	OHC2																										21		12																																									
449	OLC1																										22		19																																									
450	OLC2																										23		13																																									
451	IDW1																										24		16																																									
452	IDW2																										25		14																																									
453	IHC1																										32		9																																									
454	IHC2																										36		8																																									
455	DE-1	I/O EXT																											53																				26																				
456	DE-2	↓ "																											55																				28																				
457	MMD 13	S.A.-2													84									27																										42/62	42/65																				
458	TR16	PE					80		80										80		80	53																											83																				
459	ST16	SA										79/80	79/80	79/80	79/80							60/86																									20/19																				Twisted pairs
460	MMD GND	D/S															19/1																																																						
461	MMD GND	"									19/1																																																										
462	MPT0	ID-0					83/39																																																																
463	MPT1	"					81												83				37																																															
464	MPT2	ID-2																	81				35																									21																				
477	MPT3	MEM EXT.																					33																									84																				
478	MPT4																						31																								21																					
465	RUN	I/O ADR.																																															41		50 ←															→ 50	32		
466	SPAR																																																84		68 ←															→ 68			
467	THERM SW	MMD																					81	52																																													
468	PRH	DMI																										31			23																																						78	
469	TSA	STG		27																		17								45	59	59						29	76			67																												
470	TTK	MEM EXT																					25																								33/46/84	33																				
471	MMD	GND																																													1/26																					
472	+4.5V																																														39	31/46																				
473	M 14	DML			66																																											49																				
474	MMD 14	MEM EXT.																					29																								64	64/51																				
475	$\overline{\text{MNS}}$	MMO																					76																			19/20																												
476	$\overline{\text{MPT}}$	"																					78																			12																												
477																																																																				
478																																																																				
475	$\overline{\text{MNS}}$	MMD																																								22/26																												

HP 2116B
BACKPLANE WIRE LIST

HP 2115A backplane wire list

V

SEQ NO	SIGNAL	SOURCE	1	2	3	4	5	6	7	8	9	10	11	12	13	14	15	16	17	18	19	20	21	22	23	24	112	113	114	115	116	117	118	119	120	121	122	123	REMARKS
			MEMORY												ARITHMETIC LOGIC																								
			X0/1	X0/1	X0-0	X0-1	PARITY ERROR	SA-0	SA-1	F.P.C.	12-15	8-11	4-7	0-3	TIMING GEN.	INSTR. DECODER	SHIFT LOGIC	EAU TIMING	EAU LOGIC	I/O CONTROL	I/O ADDRESS	DML	DMA ADD. ENC.	DMA CONTROL	DMA CHAR PACK	POWER FAIL	I/O-X2	I/O-X1	I/O 17	16	15	14	13	12	11	10	DMA REG 2	DMA REG 1	
			I/O																																				
	-2V	PWR. SUP.	47/48	←							COPPER BUSS														47/48		47/48	←			COPPER BUSS							47/48	
	+4.5V		39/40	←							COPPER BUSS														39/40		39/40	←			COPPER BUSS							39/40	
	+7V																																						DISPLAY BD
	+12v																										43/44	←			COPPER BUSS					43/44			
1	-12V							69/70	69/70																		69/70	←			COPPER BUSS					69/70			
2	+20V		43/44	43/44	43/44	43/44																																	
	GND		1/2	←							COPPER BUSS														1/2		1/2	←			COPPER BUSS							1/2	
	GND		85/86	←							COPPER BUSS														85/86		85/86	←			COPPER BUSS							85/86	
	LAMP GND																																						DISPLAY BD
3	+30V	↓																											36	←					→	36			
4	PRESET LAMP									84																8													
5	ISG	EAU													4			63						3															
6	STF	ERS															5	15		41				16				9	←						→	9			
7	OVF IND									4							9																						
8	IOO																13						30	56			20		20	←					→	20	8	8	
9	TR2(B)																15				53																		
10	CLF																19	24		51				14		8		7	←					→	7		51	
11	IOI										31	31	31	31			44				24		49/11	84/81			24		24	←					→	24	22	22	
12	OVF																35																						
13	EIND									83							37																						
14	$\overline{RRS}$													83			41																						
15	CLC																53			75				60		4		21	←					→	21	18	18	
16	CØ													67			71																					49	
17	AAF						59								75	49	77																						
18	TRØ(B)																4				83																		
19	$\overline{SLM}$(B)										80	80	80	80								77																	
20	SFC																14			71				24		F	5		5	←					→	5			
21	HIN														66		26																						
22	$\overline{RL4}$	↓									78	78	78	78			28																						
23	$\overline{SRM}$ (B)	DML									74	74	74	74								78																	
24	IOCO	ERS									70	70	70	70			34																						
25	$\overline{SL14}$ (B)	DML									82											74																	
26	$\overline{SLB}$	ERS									41						42																						
27	PFCI	FPC								21																L													
28	SFS	ERS															54			68				20			25		25	←					→	25		31	
29	STC																56			61			17	58		C		22	←					→	22	20	20	
30	BAF						56								83	13	80																						
31	ISR	↓								6							84																						
23	$\overline{SRM}$ B	DML									83	83	83									78																	
19	$\overline{SLM}$ B	DML										41/82	41/82	41/82								77																	
32	ADD	SRF														3	29																						
33	MAC															5		62																					
34	STF(Ø-1)	↓										23	23/44	23/44		7																							
			1	2	3	4	5	6	7	8	9	10	11	12	13	14	15	16	17	18	19	20	21	22	23	24	112	113	114	115	116	117	118	119	120	121	122	123	

HP 2115A
BACKPLANE WIRE LIST

SEQ NO	SIGNAL	SOURCE	1	2	3	4	5	6	7	8	9	10	11	12	13	14	15	16	17	18	19	20	21	22	23	24	112	113	114	115	116	117	118	119	120	121	122	123	REMARKS
			MEMORY												ARITHMETIC LOGIC																								
			X0/1	X0/1	X0-0	X0-1	PARITY ERROR			SA-0	SA-1	E.P.C.	12-15	8-11	4-7	0-3	TIMING GEN.	INSTR. DECODER	SHIFT LOGIC	E.A.U. TIMING	E.A.U. LOGIC	I/O CONTROL	I/O ADDRESS	DMA	DMA ADD. ENC.	DMA CONTROL	DMA CHAR. PACK	POWER FAIL	I/O-X2	I/O-X1	I/O 17	16	15	14	13	12	11	10	DMA REG 2	DMA REG 1	
35	RSM(Ø-15)	SRF									14/21	21				11																							
36	RARB										34	34	34	34		19			65																				
37	STM(6-9)											29	22			21																							
38	STM(Ø-11)											22				27																							
39	STBB										26	26	26	26		51																							
40	RBØ													37		61	52		43																				
41	STBT										51	51	51	51		63																							
42	$\overline{CMP}$(B)	DML									64	64	64	64								79																	
43	$\overline{EOF}$ (B)	DML									76	76	76	76								75																	
44	ADF	SRF									5	5	5	5		75			12					82															
45	JMP														34	79																							
46	SBØ													42		81			44																				
47	STP(12-15)										23/44	44				8																							
48	ASG															10	82																						
49	RSM(6-9)											14	21			12					11																		
50	$\overline{OPO}$														42	16																							
51	RBRB										28	28	28	28		18			58																				
52	STM(Ø-5)												29	22/29		20																							
53	CPR															22	63																						
54	STM(12-15)										22/29					28				79																			
55	SRG															38	49																						
56	$\overline{IR15}$														49	42										1													
57	STA										38	38	38	38		50																							
58	ANF										72	72	72	72		56																							
59	RST										7	7	7	7		58																							
60	STR														81	64																							
61	JSB														82	66																							
62	RMSB										8	8	8	8		68			34																				
63	RPRB										12	12	12	12		72			4																				
64	ISZ														24	76	61																				69		
65	RTSB										20	20	20	20		82			19																		60		
66	$\overline{IOF}$										73	73	73	73		84																							
67	IOG															6	16			33						D													
68	PH4	STG													13	83				53																			
69	T3T4														15	70	7		74					30															
70	T1T2														21	52			51																				
71	P123														23	76		13				68																	
72	MWT			12	12			50							35																								
73	RPB							46							27																								
74	MRT				18										29																								
75	P123														31																								
76	MWL							54							33																								
77	PH2														37	53																							
			1	2	3	4	5	6	7	8	9	10	11	12	13	14	15	16	17	18	19	20	21	22	23	24	112	113	114	115	116	117	118	119	120	121	122	123	

HP 2115A
BACKPLANE WIRE LIST

			MEMORY							ARITHMETIC LOGIC																	I/O											
			Y0/1	X0/1	ID-Ø	ID-1	PARITY ERROR	SA-Ø	SA-1	E.P.C.	12-15	8-11	4-7	0-3	TIMING GEN.	INSTR. DECODER	SHIFT LOGIC	EAU TIMING	EAU LOGIC	I/O CONTROL	I/O ADDRESS	DML	DMA ADD. ENC.	DMA CONTROL	DMA CHAR. PACK.	POWER FAIL	I/O-X2	I/O-X1	I/O 17	16	15	14	13	12	11	10	DMA REG 2	DMA REG 1	
SEQ NO	SIGNAL	SOURCE	1	2	3	4	5	6	7	8	9	10	11	12	13	14	15	16	17	18	19	20	21	22	23	24	112	113	114	115	116	117	118	119	120	121	122	123	REMARKS
78	PHI	STG													41	44		31		29																			
79	T7S														51			23						10															
80	T1														53	62		71	13	23																			
81	TS														55	45	74	76	29	27			45														59	57	
82	POPIØ														61					63																			
83	T3														63	43	45	75	32	3																	5	5	
84	T5														69	36	46	67	54	45																			
85	SWSB														71	24			10																				
86	SWSM														73	26			33							10													
87	T4T5														16	54	21		23				31	6															
88	T7														18	32	83	73	28					64														57	
89	TØ														28	46	68	51	15	31																		54	
90	T6T7														30	69	72	14	11				73																
91	MST							41	41						32																								
92	EIR														52	4																							
93	T4														54	31	65	55	24																				
94	$\overline{RF2}$									14					58			54								J													
95	PH3														60	60	62																					57	
96	SWST														62	34			20					83															
97	SWSP														64	37			3																				
98	SEO														72	77	22																						
99	RPE						45								74																								
100	T2														76	59	35	43	22	83																			
101	SWSA														84	35			66																				
102	TOTI														17	80			36																				
103	T6														11			60	30																				
104	MIT		30	30	54	54									25																								
105	TR1	RAFØ-3					38							9				30			84				5														
106	$\overline{TR3}$	"			8	8	33							15			10				59																		
107	$\overline{MI}$	DML		50																		9																	
108	MR3	RAFØ-3												25								16																	
109	IOBO3													35									35		45			55	45 ←							→ 45	34	34	
110	TANI													43			58																						
111	$\overline{TR2}$				14	14	34							53			33				66																		
112	IOBO2													57									65		41			53	41 ←							→ 41	32	32	
113	$\overline{MØ}$	DML		56																		5																	
114	MR2	RAFØ-3												65								12																	
115	$\overline{TR1}$				4	4	42							10			27				80																		
116	TR3						37							16				32			60				9														
117	MR1													18								8																	
118	$\overline{M3}$	DML		80																		17																	
119	C4	RAFØ-3											67	36																									
120	IOBO1	"												50									42		38			51	38 ←							→ 38	26	26	
			1	2	3	4	5	6	7	8	9	10	11	12	13	14	15	16	17	18	19	20	21	22	23	24	112	113	114	115	116	117	118	119	120	121	122	123	

HP 2115A
BACKPLANE WIRE LIST

SEQ NO	SIGNAL	SOURCE	1	2	3	4	5	6	7	8	9	10	11	12	13	14	15	16	17	18	19	20	21	22	23	24	112	113	114	115	116	117	118	119	120	121	122	123	REMARKS
			MEMORY											ARITHMETIC LOGIC																	I/O								
			Y0Z1	X0Z1	X0-0	X0-1	PARITY ERROR	SA-0	SA-1	F.P.C.	12-15	8-11	4-7	0-3	TIMING GEN.	INSTR. DECODER	SHIFT LOGIC	EAU TIMING	EAU LOGIC	I/O CONTROL	I/O ADDRESS	DML	DMA ADD ENG.	DMA CONTROL	DMA CHAR PACK.	POWER FAIL	I/O-X2	I/O-X1	I/O 17	16	15	14	13	12	11	10	DMA REG 2	DMA REG 1		
121	$\overline{TR0}$	RAF 0-3			6	6	58							54			24				82																		
122	TR2						35							56		71		38							7														
123	TR0						41							58			12	37							3														
124	IOBO 0													60									21		35			49	35	←				→	35	24	24	
125	$\overline{M2}$	DML		34																		13																	
126	MR0	RAF 0-3												63								4																	
127	TR5	RAF 4-7					24						9					69			58				13														
128	$\overline{TR7}$	"			20	20	21						15			23	30																						
129	$\overline{M5}$	DML		58																		25																	
130	MR7	RAF 4-7											25									32																	
131	IOBO 7												35												52			63	52	←				→	52	50	50	
132	TAN2												43				57																						
133	$\overline{TR6}$				28	28	22						53			55	23																						
134	IOBO6	↓											57												53			61	53	←				→	53	52	52	
135	$\overline{M4}$	DML		72																		21																	
136	MR6	RAF 4-7											65									28																	
137	$\overline{TR5}$				12	12	28						10				6				79																		
138	TR7						23						16				11	83							17														
139	MR5	↓											18									24																	
140	$\overline{M7}$	DML	50																			33																	
141	C8	RAF 4-7										67	36																										
142	IOBO5												50										61		51			59	51	←				→	51	42	42	
143	$\overline{TR4}$				22	22	27						54				79				78																		
144	TR6						26						56				3	66							15														
145	TR4						25						58			25		72			81				11														
146	IOBO4	↓											60										63		42			57	42	←				→	42	36	36	
147	$\overline{M6}$	DML	56										66									29																	
148	MR4	RAF 4-7											68									20																	
149	TR9	RAF 8-11					15					9					17	61							43														
150	$\overline{TR11}$	"			68	68	13					15					55	70																					
151	$\overline{M9}$	DML	80																			43																	
152	MR11	RAF 8-11										25										52																	
153	IOBO 11											35													55			73	55	←				→	55	64	64	
154	TAN3											43					60																						
155	$\overline{TR10}$				58	58	14					53																											
156	IOBO 10	↓										57													58			71	58	←				→	58	66	66	
157	$\overline{M8}$	DML	34																			37																	
158	MR10	RAF 8-11										65										46																	
159	$\overline{TR9}$				60	60	20					10				57																							
160	TR11						18					16				14	43	84							50														
161	MR9	↓										18										42																	
162	$\overline{M11}$	DML	58																			53																	
163	C12	RAF 8-11								67		36																											
			1	2	3	4	5	6	7	8	9	10	11	12	13	14	15	16	17	18	19	20	21	22	23	24	112	113	114	115	116	117	118	119	120	121	122	123	

HP 2115A
BACKPLANE WIRE LIST

MEMORY | ARITHMETIC LOGIC | I/O

SEQ NO	SIGNAL	SOURCE	1 Y0/1	2 X0/1	3 IO-0	4 IO-1	5 PARITY ERROR	6 SA-0	7 SA-1	8 F.P.C.	9 12-15	10 8-11	11 4-7	12 0-3	13 TIMING GEN.	14 INSTR. DECODER	15 SHIFT LOGIC	16 EAU TIMING	17 EAU LOGIC	18 I/O CONTROL	19 I/O ADDRESS	20 DML	21 DMA ADD. ENC.	22 DMA CONTROL	23 DMA CHAR. PACK	24 POWER FAIL	112 I/O-X2	113 I/O-X1	114 I/O 17	115 16	116 15	117 14	118 13	119 12	120 11	121 10	122 DMA REG 2	123 DMA REG 1	REMARKS
164	IOB09	RAF 8-11										50													56			67	56	←					→	56	62	62	
165	$\overline{\text{TR8}}$				30	30	19					54					36																						
166	TR10						16					56				9									46														
167	TR8						17					58				29	18	78							34														
168	IOB08											60													54			65	54	←					→	54	56	56	
169	$\overline{\text{M10}}$	DML	72																			49																	
170	MR8	RAF 8-11										68										36																	
171	TR13	RAF 12-15					4				9					30									66														
172	$\overline{\text{TR15}}$	"			82	82	5				15				36																								
173	P123(B)	DML															69					65																	
174	IIR	EAU													6			77				71																	
175	IOB015	RAF 12-15									35													51	74			81	74	←					→	74	78	78	
176	TAN4										43						59																						
177	$\overline{\text{TR14}}$				74	74	8				53																												
178	IOB014										57												15		65			79	65	←					→	65	76	76	
179	$\overline{\text{M12}}$	DML							83													57																	
180	MR14	RAF 12-15									65											64																	
181	$\overline{\text{TR13}}$				76	76	7				10																												
182	TR15						3				16				38	41									70														
183	MR13										18											60																	
184	MRT0	STG	18/22	22											8																								
185	C16	RAF 12-15									36						64		50																				
186	IOB013										50													54	61			77	61	←					→	61	74	74	
187	$\overline{\text{TR12}}$				66	66	9				54																												
188	TR14						6				56					33									68														
189	TR12						10				58					17									62														
190	IOB012										60														57			75	57	←					→	57	68	68	
191	PWR FAIL	PWR. SUP.								12																5													
192	MR12	RAF 12-15									68											56																	
193	SB15										6						50																						
194	RB15										30						66		77																				
195	TB0	RAF 0-3									81			69			51		79		10																		
196	TB1										75			13			75				9																		
197	TB2										84			55			67				8					K													
198	TB3										45		77	17			78				7																		
199	TB4	RAF 4-7											69	81							6																		
200	TB5												13	75							5																		
201	TB6												55	84																									
202	TBT											77	17	45																									
203	TB8	RAF 8-11										69	81																										
204	TB9											13	75																										
205	TB10											55	84																										
206	TB11										77	17	45																										
			1	2	3	4	5	6	7	8	9	10	11	12	13	14	15	16	17	18	19	20	21	22	23	24	112	113	114	115	116	117	118	119	120	121	122	123	

HP 2115A
BACKPLANE WIRE LIST

SEQ NO	SIGNAL	SOURCE	MEMORY							ARITHMETIC LOGIC																			I/O												REMARKS
			1 Y0/1	2 X0/1	3 ID-0	4 ID-1	5 PARITY ERROR	6 SA-0	7 SA-1	8 F.P.C.	9 12-15	10 8-11	11 4-7	12 0-3	13 TIMING GEN.	14 INSTR. DECODER	15 SHIFT LOGIC	16 EAU TIMING	17 EAU LOGIC	18 I/O CONTROL	19 I/O ADDRESS	20 DML	21 DMA ADD. ENC.	22 DMA CONTROL	23 DMA CHAR. PACK.	24 POWER FAIL	112 I/O-X2	113 I/O-X1	114 I/O 17	115 16	116 15	117 14	118 13	119 12	120 11	121 10	122 DMA REG 2	123 DMA REG 1	
207	TB12	RAF 12-15									69	31					76																						
208	TB13										13	75					75																						
209	TB14										55	84					70																						
210	TB15	↓									17	45		77			20	64	80																				
211	PEH	PE					62								57																								
212	ST0	SA						3	3					49																									
213	ST1							7	7					4																									
214	ST2							11	11					52																									
215	ST3							15	15					11																									
216	ST4							19	19				49																										
217	ST5							23	23				4																										
218	ST6							27	27				52																										
219	ST7							31	31				11																										
220	ST8							35	35			49																											
221	ST9							51	51			4																											
222	ST10							55	55			52																											
223	ST11							59	59			11																											
224	ST12							63	63		49																												
225	ST13							67	67		4																												
226	ST14							71	71		52																												
227	ST15							75	75		11																												
228	ST16	↓					60	79	79																														
229	PNS	DISPLAY								18					43																								
230	MNS									22					12																								
231	ILS	↓								26						73																							
232	PON	PWR SUP								71																9			66 ←							→ 66			
233	PRS	FPC								30					78											2													
234	$\overline{\text{PRS}}$									34					79																								
235																																							
236	RNS									44					70											R													
237	$\overline{\text{HLS}}$									50					45																								
238	HLS									54					50											H													
239	LMS									58					46												18		59 ←							→ 59			
240	LAS									62					80																								
241	LBS									66					65																								
242	LADS									70					68																								
243	DMS									74					59																								
244	SCS									78					56																								
245	LPS	↓								82					22																								
246	MPT	SA							45						19																								
247	IOG(B)	I/O SECT																		37			84	22			15		15 ←							→ 15	11	11	
248	T3(B)																			81							11		11 ←							→ 11			
249	SIR(B)	↓																		35			70	34		12	32		32 ←							→ 32		53	
			1	2	3	4	5	6	7	8	9	10	11	12	13	14	15	16	17	18	19	20	21	22	23	24	112	113	114	115	116	117	118	119	120	121	122	123	

HP 2115A
BACKPLANE WIRE LIST

			MEMORY							ARITHMETIC LOGIC																		I/O											
			Y0/1	X0/1	ID-0	ID-1	PARITY ERROR	SA-0	SA-1	F.P.C.	12-15	8-11	4-7	0-3	TIMING GEN.	INSTR. DECODER	SHIFT LOGIC	EAU TIMING	EAU LOGIC	I/O CONTROL	I/O ADDRESS	DMI	DMA ADD. ENC.	DMA CONTROL	DMA CHAR. PACK.	POWER FAIL		I/O-X2	I/O-X1	I/O 17	16	15	14	13	12	11	10	DMA REG 2	DMA REG 1	
SEQ NO	SIGNAL	SOURCE	1	2	3	4	5	6	7	8	9	10	11	12	13	14	15	16	17	18	19	20	21	22	23	24		112	113	114	115	116	117	118	119	120	121	122	123	REMARKS
250	IAK	I/O SECT																		77				27		7		10		10←							→10		44	
251	IFN6																			5/10				7															35	
252	IEN10																			8										8←							→8			
253	CRS																	68		65			74	32					13←								→13	9	9	
254	FLG0																				14			25						4	4/49←						→4/49		30	
255	SKF																31			73				29		N			12←								→12		15	
256	ENF																			67			49	37		13		46		46←							→46			
257	INT													44							3					15														
258	IOS																81	29		6																				
259	$\overline{PHS}$																			9	4																			
260	ESR																			21	12																			
261	SCL(0)																			38	65		32					67		34							16			
262	SCL(1)																			42	67		80					71								16	34			
263	SCL(2)																				61		18					73							16	34			13	
264	SCL(3)																				63		82					75						16	34			13		
265	SCL(4)																				51		38			E		77					16	34						
266	SCM0																			36	75		51	18		3		55										14	14	
267	IRQ10																				33								64								6			
268	IRQ11																				35								66							6	33			
269	IRQ12																				37								68						6	33				
270	IRQ13																				18								72					6	33					
271	IRQ14																				31								74				6	33						
272	IRQ15																				20								76			6	33							
273	IRQ16																				38								78		6	33								
274	IRQ17																				22								80	6	33									
275	PRH_{10}/PRL_{7}									81										12/14			57	9													23		23	
276	11" 10																																			23	3			
277	12" 11																																		23	3				
278	13" 12																																	23	3					
279	14" 13																																23	3						
280	15" 14																															23	3							
281	16" 15																														23	3								
282	17" 16																													23	3									
283	POPIO(B)																			72				35					17	17←							→17		37	
284	IOBI0									3				79											26			50		26←							→26	17	17	
285	IOBI1									7				32											29			52		29←							→29	25	25	
286	IOBI2									11				33											30			54		30←							→30	28	28	
287	IOBI3									15				27											64			56		64←							→64	58	58	
288	IOBI4									19			79												77			58		77←									→77	
289	IOBI5									23			32												80			60		30←									→80	
290	IOBI6									27			33												81			62		81←							→81	79	79	
291	IOBI7									31			27												84			64		84←							→84	81	81	
292	IOBI8									35		79													27			66		27←							→27	21	21	
			1	2	3	4	5	6	7	8	9	10	11	12	13	14	15	16	17	18	19	20	21	22	23	24		112	113	114	115	116	117	118	119	120	121	122	123	

HP 2115A
BACKPLANE WIRE LIST

SEQ NO	SIGNAL	SOURCE	1	2	3	4	5	6	7	8	9	10	11	12	13	14	15	16	17	18	19	20	21	22	23	24	112	113	114	115	116	117	118	119	120	121	122	123	REMARKS
			MEMORY												ARITHMETIC LOGIC																				I/O				
			Y0/1	X0/1	I0-0	I0-1	PARITY ERROR	SA-0	SA-1	F.P.C.	12-15	8-11	4-7	0-3	TIMING GEN.	ANSTR. DECODER	SUM LOGIC	EAU TIMING	EAU LOGIC	I/O CONTROL	I/O ADDRESS	DML	DMA ADD. ENC.	DMA CONTROL	DMA CHAR. PACK.	POWER FAIL	I/O-X2	I/O-X1	I/O17	16	15	14	13	12	11	10	DMA REG 2	DMA REG 1	
293	IOBI9	I/O SECT								41		32													28		68		28							28	19	19	
294	IOBI10									45		33													31		72		31							31	27	27	
295	IOBI11									51		27													60		74		60							60	49	49	
296	IOBI12									55	79														78		76		78							78	61	61	
297	IOBI13									59	32														79		78		79							79	75	75	
298	IOBI14									63	33														82		80		82							82	73	73	
299	IOBI15									67	27														83		82		83							83			
300	IOBI16																										84		18							18			
301	EPH	DML													14							72																	
302	YN7	FPC								28					26																								
303	YTN	FPC								9					20																								
304	FLG1	I/O SECT																			16							26	49										
305	$\overline{TR16}$				80	80	52																																
306	IDC	SA			52				82																														
307	SAC	SA						50	81																														
308	DSC	SA		14					84																														
309	MMD2	SA		10					49																														
310	SCM1	I/O SECT																			77		67						14	14/37	14/37	14/37	14/37	14/37	14/37	14/37			
311	SCM2																				71		69						37										
312	POFP									10					77																								
313	DSC'		14/40																																				
314	MMD3		10/49																																				
315	M0	DML		60																		6																	
316	M1			64																		10																	
317	M2			38																		14																	
318	M3			84																		18																	
319	M4			82																		22																	
320	M5			78																		26																	
321	M6		60							24												30																	
322	M7		64							20												34																	
323	M8		38							16												38																	
324	M9		84							13												44																	
325	M10		82							17												50																	
326	M11		78							5												54																	
327	M12					52			50													58																	
328	M13																					62																	
329	M14																					66																	
330	$\overline{SLM}$																8					70																	
331	$\overline{SRM}$																32					76																	
332	$\overline{SL14}$																58					67																	
333	$\overline{EOF}$														67							83																	
334	$\overline{CMF}$														65							81																	
335	SLM																	44				73																	
			1	2	3	4	5	6	7	8	9	10	11	12	13	14	15	16	17	18	19	20	21	22	23	24	112	113	114	115	116	117	118	119	120	121	122	123	

HP 2115A
BACKPLANE WIRE LIST

SEQ NO	SIGNAL	SOURCE	1	2	3	4	5	6	7	8	9	10	11	12	13	14	15	16	17	18	19	20	21	22	23	24	112	113	114	115	116	117	118	119	120	121	122	123	REMARKS
			MEMORY											ARITHMETIC LOGIC								I/O																	
			Y0/1	X0/1	ID-0	ID-1	PARITY ERROR	SA-0	SA-1	E.P.C.	12-15	8-11	4-7	0-3	TIMING GEN.	INSTR. DECODER	SUP. LOGIC	EAU TIMING	EAU LOGIC	I/O CONTROL	I/O ADDRESS	DMI	DMA ADD. ENG.	DMA CONTROL	DMA CHAR. PACK.	POWER FAIL	I/O-X2	I/O-X1	I/O-Y1	I/O-Y2	15	14	13	12	11	10	DMA REG 2	DMA REG 1	
336	SRM	DML																41				61																	
337	SL14																	49				84																	
338	EOF																		26			82																	
339	CMF																		72			80																	
340																																							
341	PEI						61			73																													
342																																							
343																																							
344																																							
345																																							
346																																							
347																																							
348																																							
349																																							
350																																							
351																																							
352																																							
353																																							
354																																							
355																																							
356	AS	EAU																50	84																				
357	D1																	34	62																				
358	D2																	33	60																				
359	D3																	26	27																				
360	D4																	25	6																				
361	D5																	17	73																				
362	D6																	18	8																				
363	DL3																	57	70																				
364	DL4																	36	18																				
365	DS3																	28	67																				
366	DS34																	6	14																				
367	DS4																	9	52																				
368	DT58																	27	71																				
369	EOFR																	5	31																				
370	EXIT																	74	17																				
371	GAT																	59	76																				
372	MP1																	12	59																				
373	MP2																	11	5																				
374	MP3																	4	69																				
375	MP4																	3	46																				
376	MP5																	8	9																				
377	MD2																	79	16																				
378	OVD																	30	56																				
			1	2	3	4	5	6	7	8	9	10	11	12	13	14	15	16	17	18	19	20	21	22	23	24	112	113	114	115	116	117	118	119	120	121	122	123	

HP 2115A
BACKPLANE WIRE LIST

MEMORY

ARITHMETIC LOGIC

I/O

Y0/1
X0/1
ID-0
ID-1
PARITY ERROR
SA-0
SA-1
F.P.C.
12-15
8-11
4-7
0-3
TIMING GEN.
INSTR. DECODER
SHIFT LOGIC
EAU TIMING
EAU LOGIC
I/O LOGIC
I/O CONTROL
I/O ADDRESS
DML
DMA ADD. ENC.
DMA CONTROL
DMA CHAR. PACK.
POWER FAIL
I/O—X2
I/O—X1
I/O 17
16
15
14
13
12
11
10
DMA REG 2
DMA REG 1

SEQ NO	SIGNAL	SOURCE	1	2	3	4	5	6	7	8	9	10	11	12	13	14	15	16	17	18	19	20	21	22	23	24	112	113	114	115	116	117	118	119	120	121	122	123	REMARKS
379	OVR	EAU																22	35																				
380	$\overline{\text{OVR}}$																	16	64																				
381	RO																	46	75																				
382	ROT5																	82	68																				
383	RSDS																	65																					
384	RT																	52	57																				
385	$\overline{\text{RT}}$																	58	78																				
386	STOO																	31	83																				
387	TEV																	56	81																				
388	TOD																	45	82																				
389	T2 T3																	35	21																				
390	RB14	RAF 12-15									71								25																				
391	TRØB	CHAR. PACK																							4														
392	TR1B																								6														
393	TR2B																								8														
394	TR3B																								10														
395	TR4B																								12														
396	TR5B																								14														
397	TR6B																								16														
398	TR7B																								18														
399	TR8B																								33														
400	TR9B																								37														
401	TR10B																								44														
402	TR11B																								49														
403	TR12B																								59														
404	TR13B																								63														
405	TR14B																								67														
406	TR15B																								69														
407	SCL(5)	I/O SECT.																			52		79				79				16	34							
408	SCL(6)																				49		46	36			81			16	34								
409	SCL(7)																				50		50	38			83		16	34									
410	C1	CONTROL																					7	67															
411	C2																						81	68															
412	CIN																						41	70															
413	COUT																						36	63															
414	CR1																						34	78															
415	CR2																						27	71															
416	DIN1																							75														4	
417	DIN2																							74													4		
418	IN																							52															
419	IODO																							4	19														
420	OUT																						6	65															
421	SMAR1																							72														38	
			1	2	3	4	5	6	7	8	9	10	11	12	13	14	15	16	17	18	19	20	21	22	23	24	112	113	114	115	116	117	118	119	120	121	122	123	

HP 2115A
BACKPLANE WIRE LIST

SEQ NO	SIGNAL	SOURCE	1 XO/1	2 XO/1	3 ID-0	4 ID-1	5 PARITY ERROR	6 SA-0	7 SA-1	8 F.P.C.	9 12-15	10 8-11	11 4-7	12 0-3	13 TIMING GEN.	14 INSTR. DECODER	15 SWP LOGIC	16 EAU TIMING	17 EAU LOGIC	18 I/O CONTROL	19 I/O ADDRESS	20 DMA	21 DMA ADD ENC.	22 DMA CONTROL	23 DMA CHAR PACK	24 POWER FAIL	112 I/O-X2	113 I/O-X1	114 I/O-Y	115 I/O-T	116 16	117 15	118 14	119 13	120 12	121 11	122 10 DMA REG 2	123 DMA REG 1	REMARKS
422	SWCR1	CONTROL																						80														3	
423	SWCR2																							79													3		
424	PH5																	53		17		69	78	8														70	
425	PH5																							5															
426	TE1																						60	66															
427	TE2																						62	62															
428	WCR1																							77														84	
429	WCR2	↓																						76													84		
430	DE1	ADD ENC.																					53				26												
431	DE2																						55				28												
432	DPRL																						72																
433	IDW1																						16		24														
434	IDW2																						14		25														
435	IHC1																						9		32														
436	IHC2																						8		36														
437	OCH1																						10		20														
438	OCH2																						12		21														
439	OLC1																						19		22														
440	OLC2	↓																					13		23														
441	SRQ10	I/O SECT.																					22												19				
442	SRQ11																						28											19					
443	SRQ12																						20										19						
444	SRQ13																						26									19							
445	SRQ14																						33								19								
446	SRQ15																						44							19									
447	SRQ16																						29						19										
448	SRQ17	↓																					37					19											
449	HIS	REG1/REG2																		4			83																
450	DM0																					3														41	41		
451	DM1																					7														46	46		
452	DM2																					11														45	45		
453	DM3																					15														55	55		
454	DM4																					19														65	65		
455	DM5																					23														63	63		
456	DM6																					27														71	71		
457	DM7																					31														72	72		
458	DM8																					35														83	83		
459	DM9																					41														82	82		
460	DM10																					45														6	6		
461	DM11																					51														10	10		
462	DM12																					55														12	12		
463	DM13																					59														16	16		
464	DM14	↓																				63														7	7		
			1	2	3	4	5	6	7	8	9	10	11	12	13	14	15	16	17	18	19	20	21	22	23	24	112	113	114	115	116	117	118	119	120	121	122	123	

HP 2115A
BACKPLANE WIRE LIST

SEQ NO	SIGNAL	SOURCE	1	2	3	4	5	6	7	8	9	10	11	12	13	14	15	16	17	18	19	20	21	22	23	24	112	113	114	115	116	117	118	119	120	121	122	123	REMARKS
			MEMORY													ARITHMETIC LOGIC																				I/O			
			XO21	XO21	ID-0	ID-1	PARITY ERROR	SA-0	SA-1	E.P.C.	12-15	8-11	4-7	0-3	TIMING GEN.	INSTR. DECODER	SHIFT LOGIC	EAU TIMING	EAU LOGIC	I/O CONTROL	I/O ADDRESS	DMI	DMA ADD. ENG.	DMA CONTROL	DMA CHAR. PACK.	POWER FAIL	I/O-X2	I/O-X1	I/O 17	16	15	14	13	12	11	10	DMA REG 2	DMA REG 1	
465	SMAR2	CONTROL																						69													38		
466	IRQ6																				25			28				60										29		
467	IRQ7																				19			22				62												
468	EDT																							42					62							62				
469	PRH6									8														31		6												33		
470	IEN 20	I/O SECT.																		7							4													
471	SCM(3)																				73						57													
472	SCM(4)																				56						59													
473	SCM(5)																				57						61													
474	SCM(6)																				54						63													
475	SCM(7)																				55						65													
476	IRQ1																				17							50												
477	IRQ2																				21							52												
478	IRQ3																				23							54												
479	IRQ4																				27					14		56												
480	IRQ5																				29							58												
481																																							
482																																							
483	TOB016																											83	73							73				
484	PRL 17																			16							3		3											
485	+4.5																							40		N/11														
486	-2																							48		P														
487	GND																							2		A/1														
488	GND	SEE NOTE																																					NOTE:
489	GND	SEE NOTE																																					PINS 2,4,8,
490	+12							43/44	43/44																		43												12,16,20,24,
491	+12																									5										44			28,32,36,52,
492	RSET	EAU																42	63																				56,60,64,68,
493	JUMPER		74/46																																				72,76,80,86,
494	FLG 2																				13							28												ON A6 & A7
495	FLG 3																				15							30												ARE TIED
																																							TOGETHER
																																							TO FORM GND
																																							BUS.
			1	2	3	4	5	6	7	8	9	10	11	12	13	14	15	16	17	18	19	20	21	22	23	24	112	113	114	115	116	117	118	119	120	121	122	123	

HP 2115A
BACKPLANE WIRE LIST

HP 2116B logic diagrams

VI

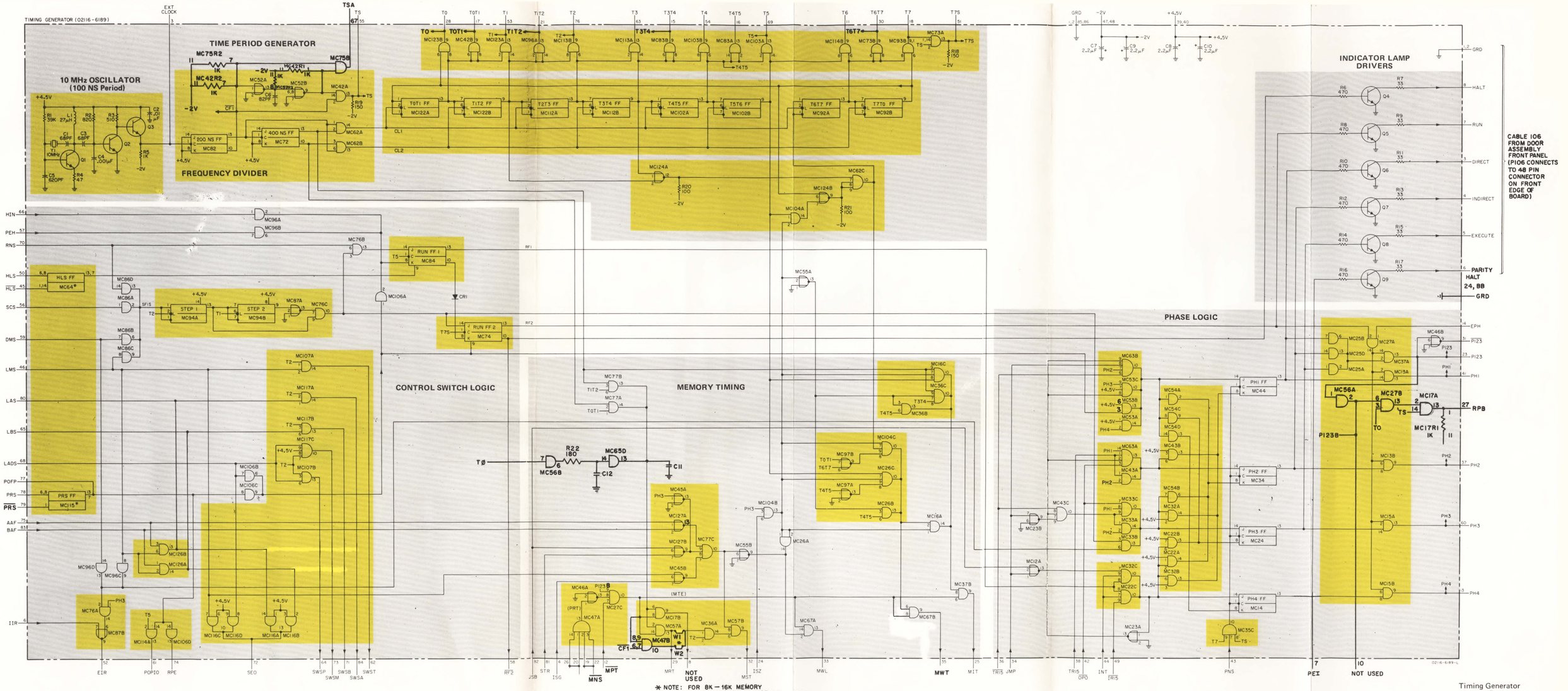

Timing Generator
HP 2116B Computer

FOR TRAINING PURPOSES ONLY

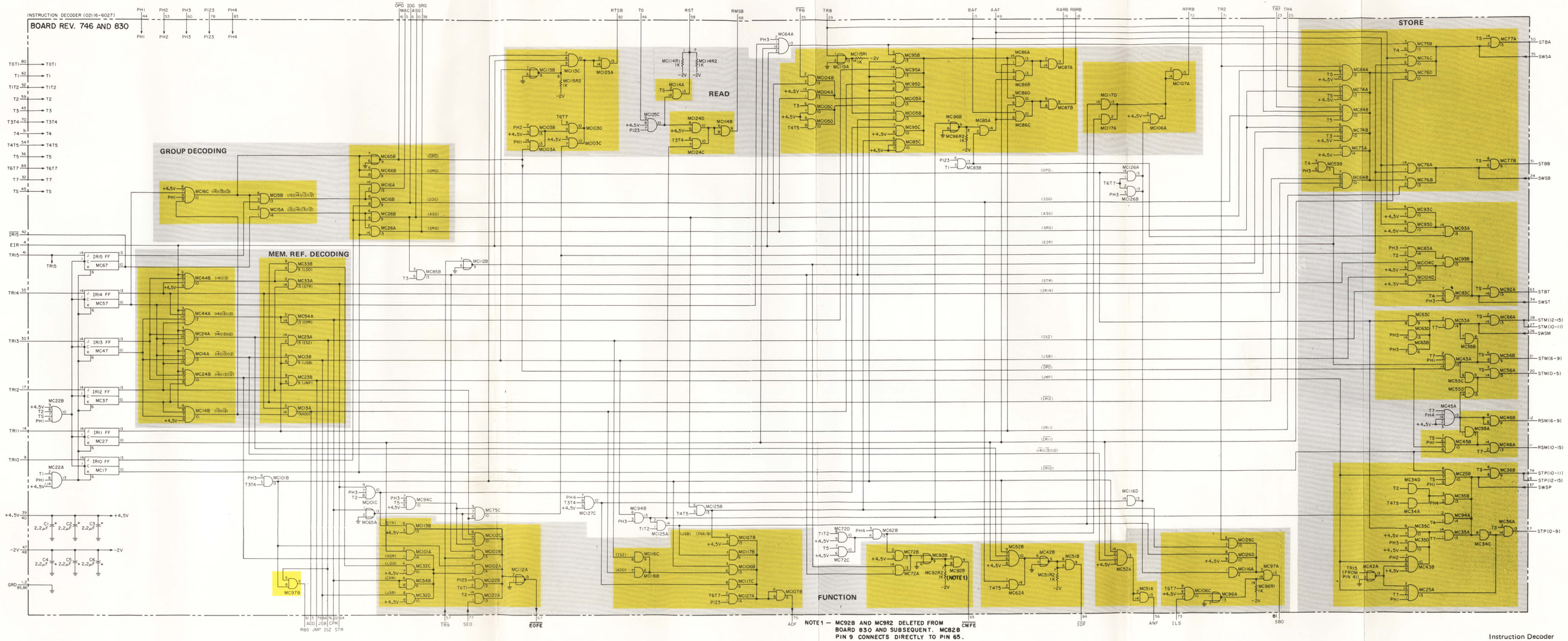

NOTE 1 — MC92B AND MC9R2 DELETED FROM BOARD 830 AND SUBSEQUENT. MC82B PIN 9 CONNECTS DIRECTLY TO PIN 65.

Instruction Decoder
HP 2116B Computer

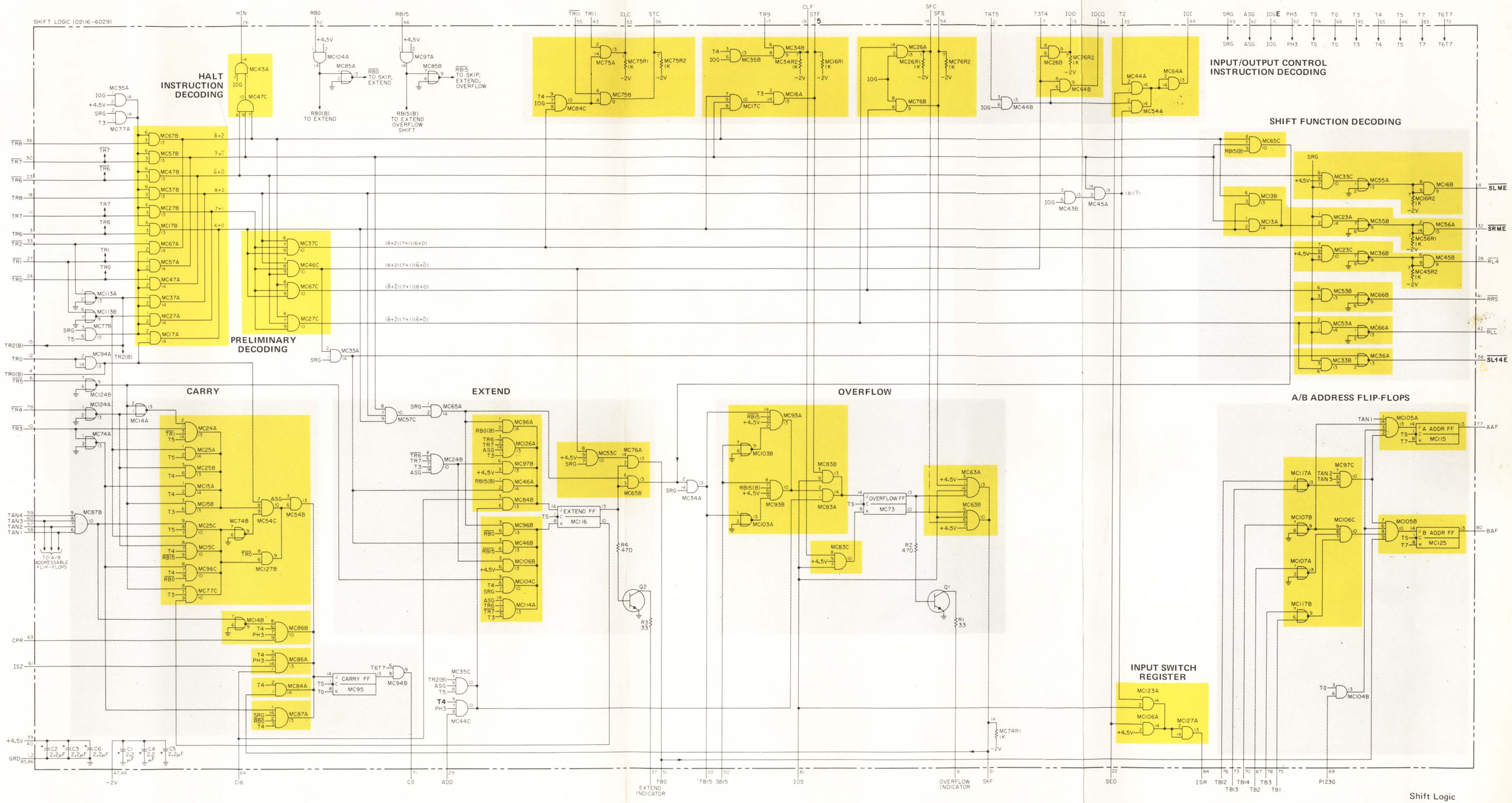

Shift Logic
HP 2116B Computer

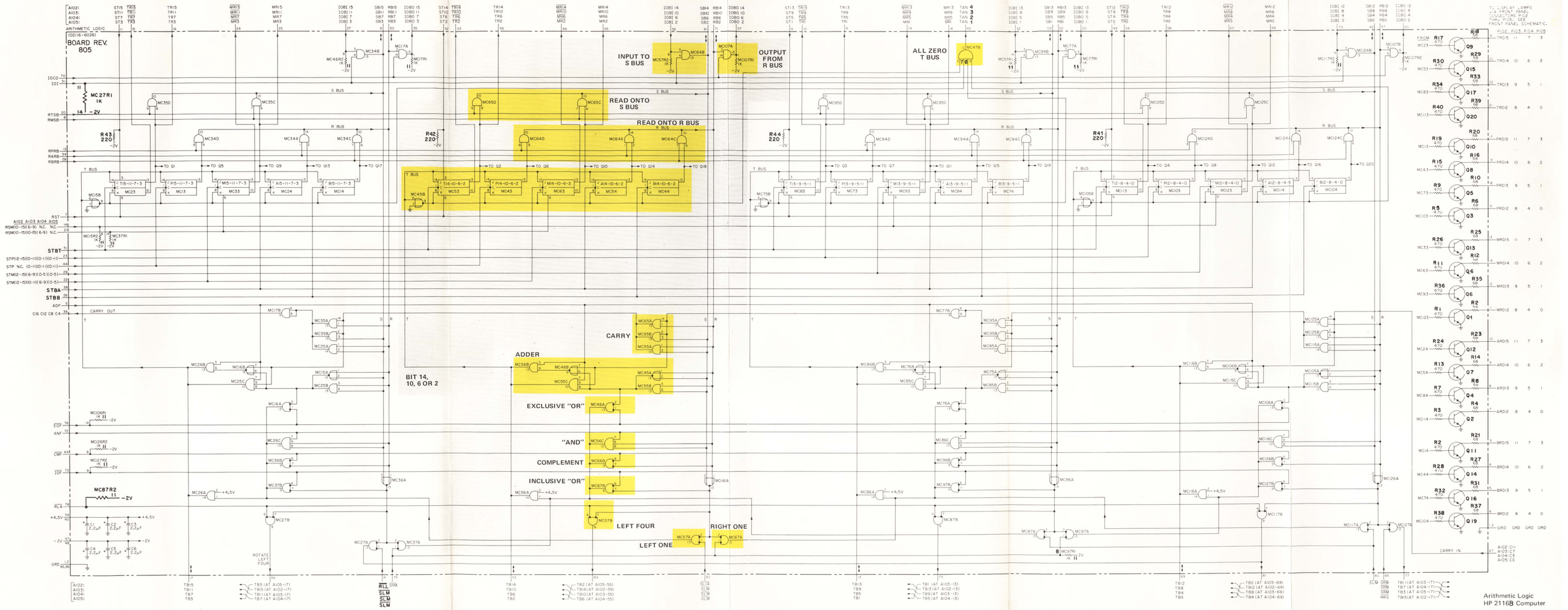

Arithmetic Logic
HP 2116B Computer

FOR TRAINING PURPOSES ONLY

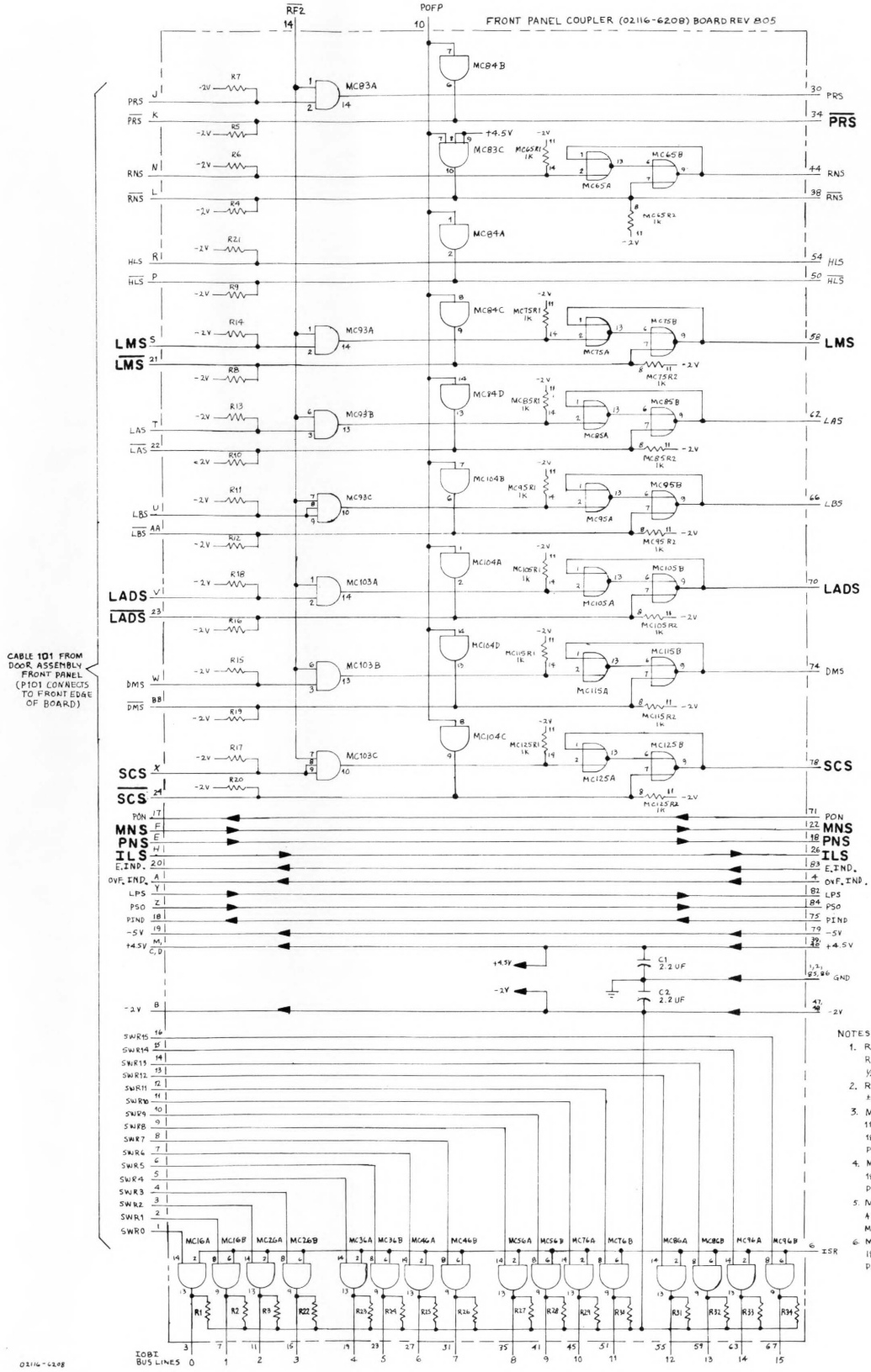

Front Panel Coupler Card (02116-6208), Logic Diagram

FOR TRAINING PURPOSES ONLY
HP 2116B

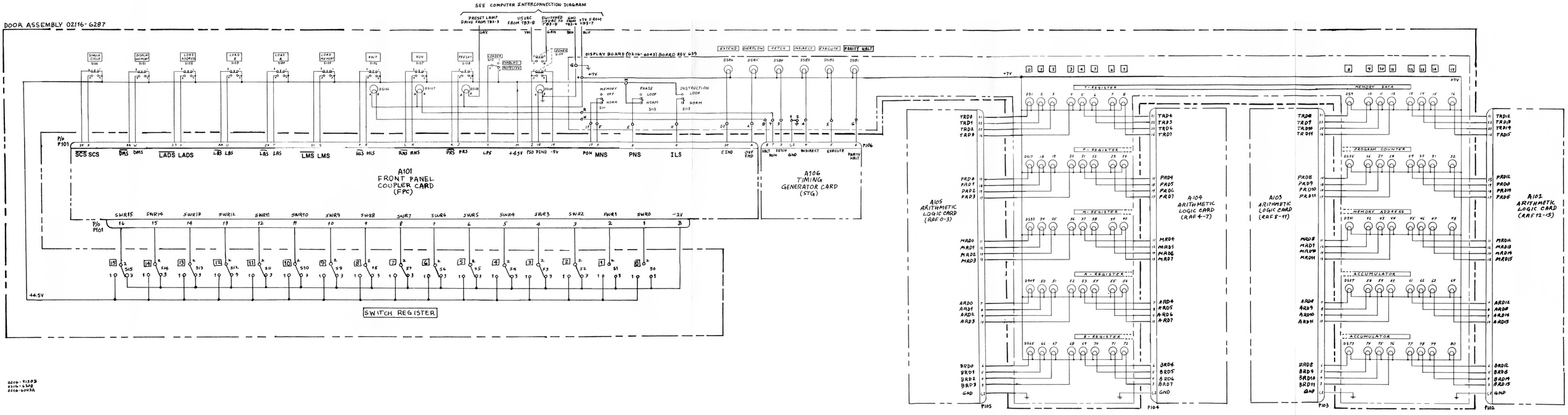

Door Assembly (02116-6287), Schematic and Interconnection Diagram

FOR TRAINING PURPOSES ONLY
HP 2116B

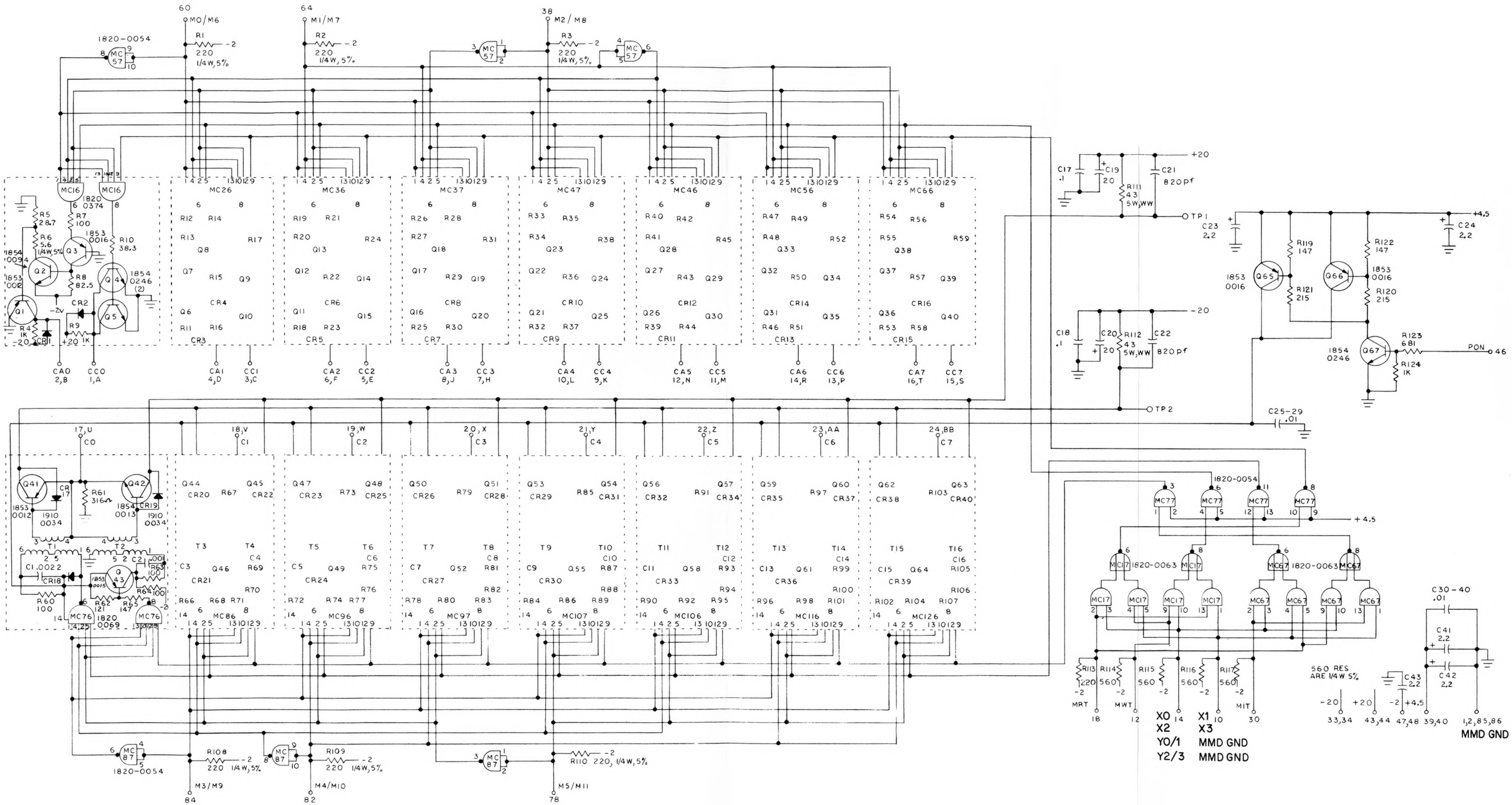

NOTE
UNLESS OTHERWISE NOTED
ALL DIODES 1901-0040
ALL TRANSFORMERS 66Z849
CAPACITANCE IN MICRO FARADS
RESISTORS 1/8W 1%
BOARD REV B17

Driver Switch Card
(02116-6266), Logic Diagram

FOR TRAINING PURPOSES ONLY
HP 2116B

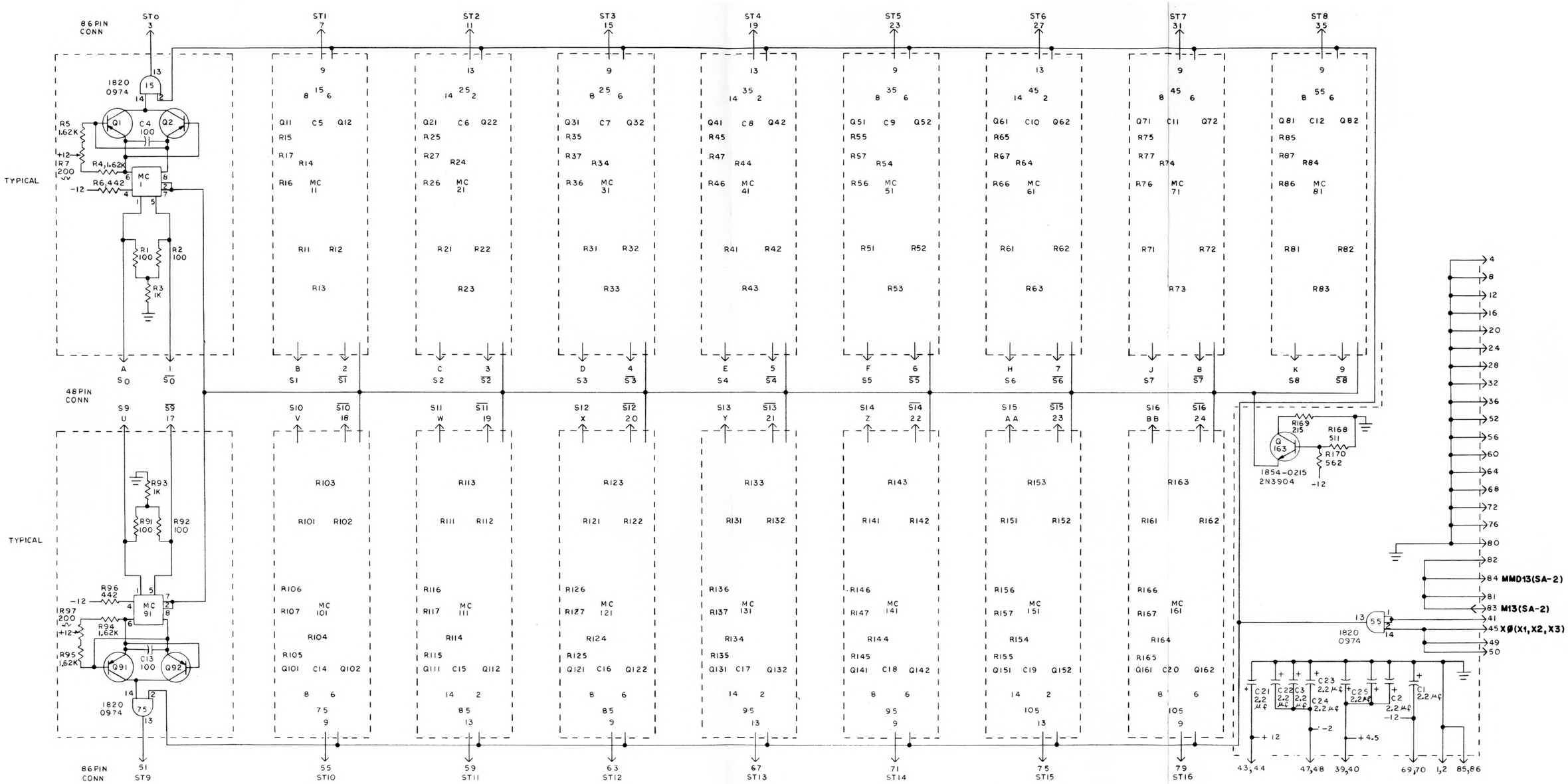

NOTE
UNLESS OTHERWISE NOTED
ALL INTEGRATED CKTS ARE 1820-0306
ALL TRANSISTORS ARE 1853-0036
ALL RESISTORS 1/8W 1% MF
BOARD REV. 744

15 REF DES (MC15)

Sense Amplifier Card
(02115-6001), Logic Diagram

FOR TRAINING PURPOSES ONLY
HP 2116B

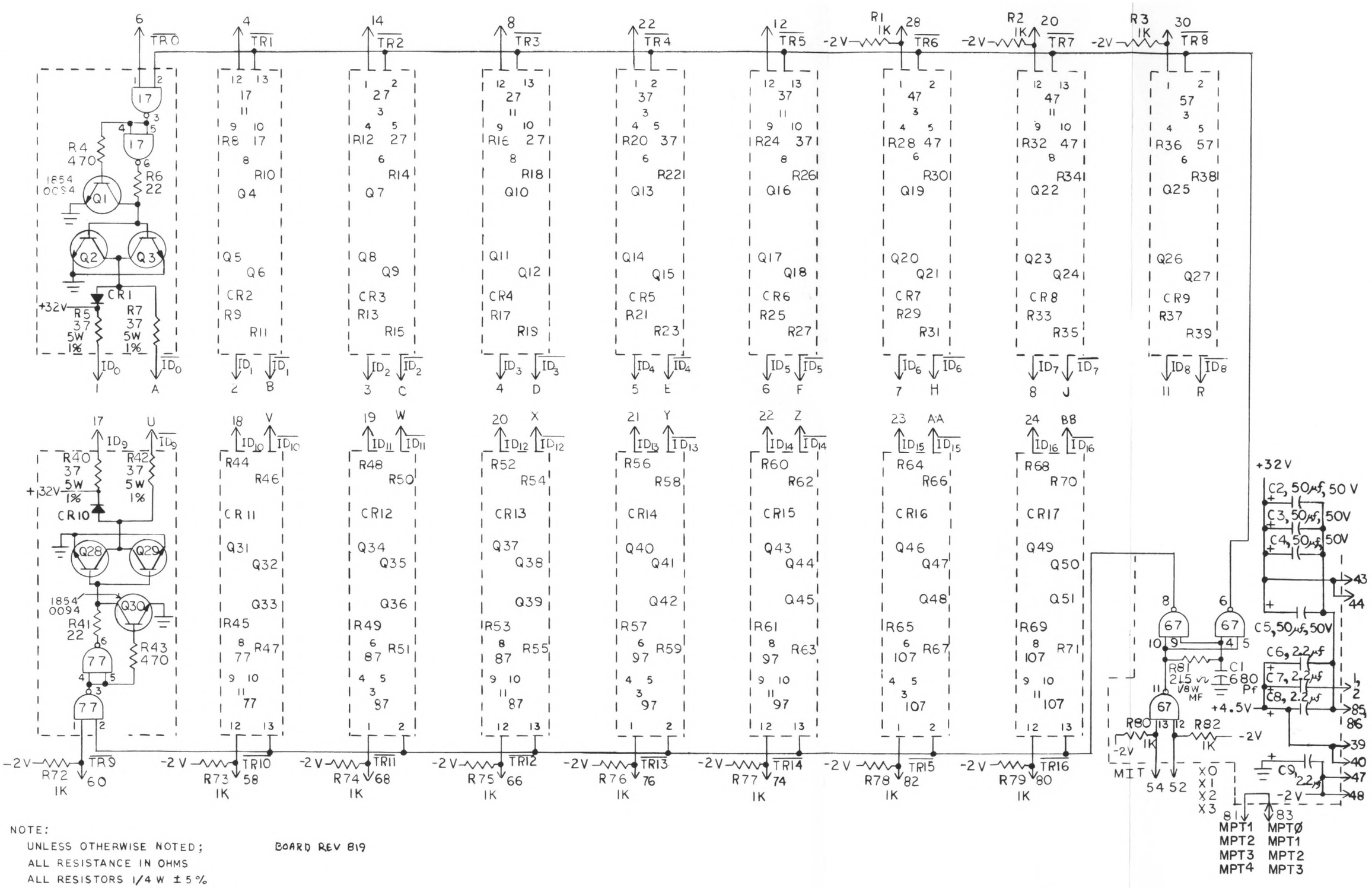

NOTE:

UNLESS OTHERWISE NOTED;
ALL RESISTANCE IN OHMS
ALL RESISTORS 1/4 W ± 5%
ALL CAPACITANCE IN MICROFARADS
ALL TRANSISTORS 2N3642
ALL MC'S 1820-0127
ALL DIODES 1901-0050

BOARD REV 819

Inhibit Driver Card
(02116-6265), Logic Diagram

FOR TRAINING PURPOSES ONLY
HP-2116B

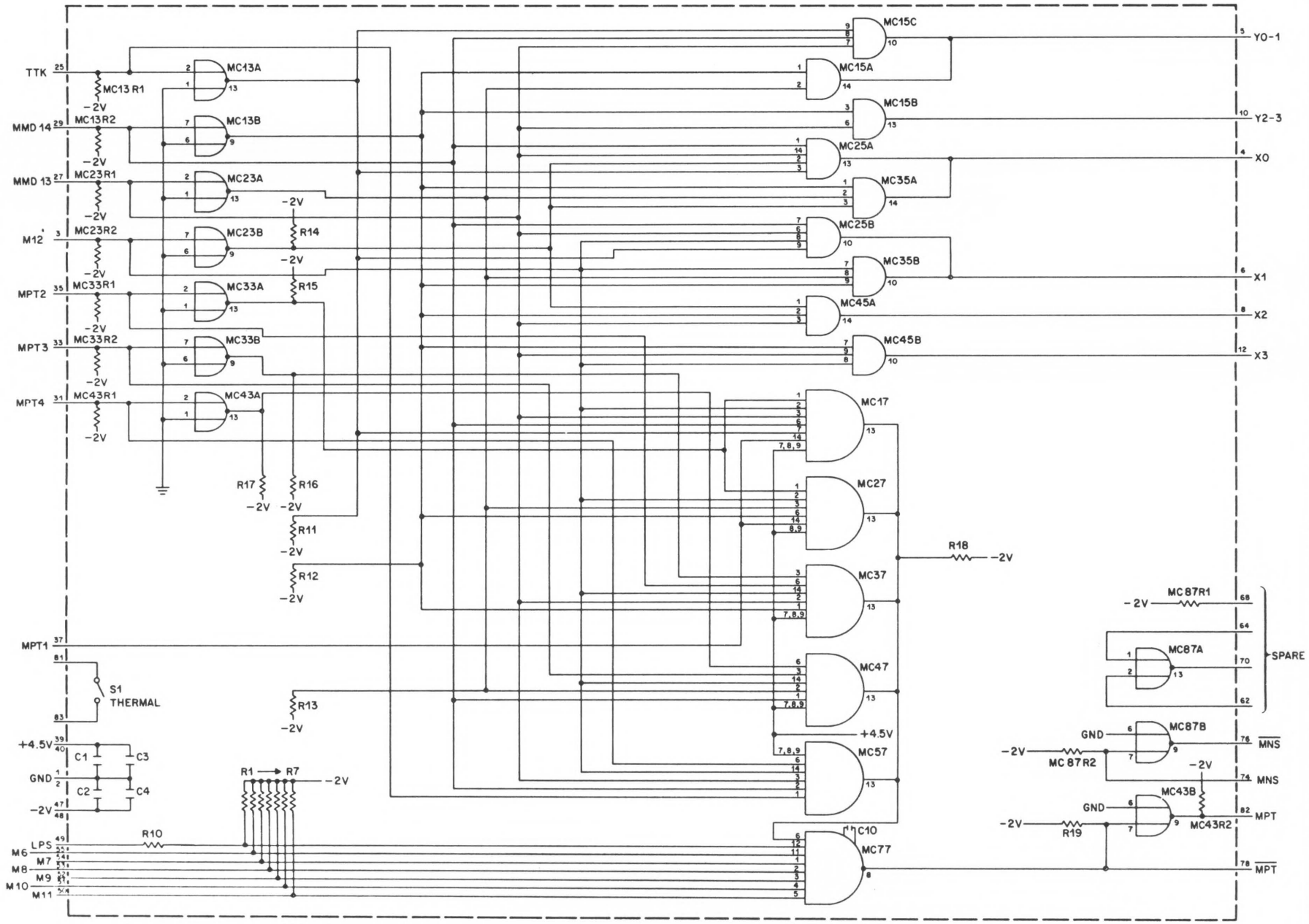

MEMORY MODULE DECODER

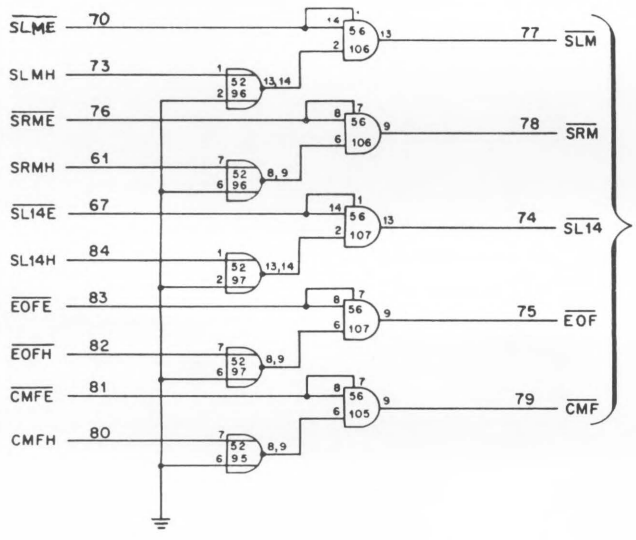

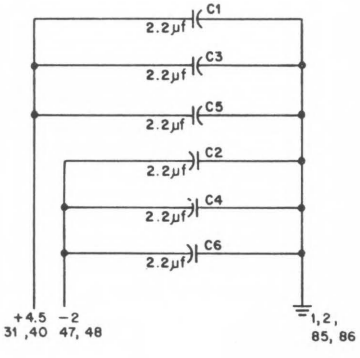

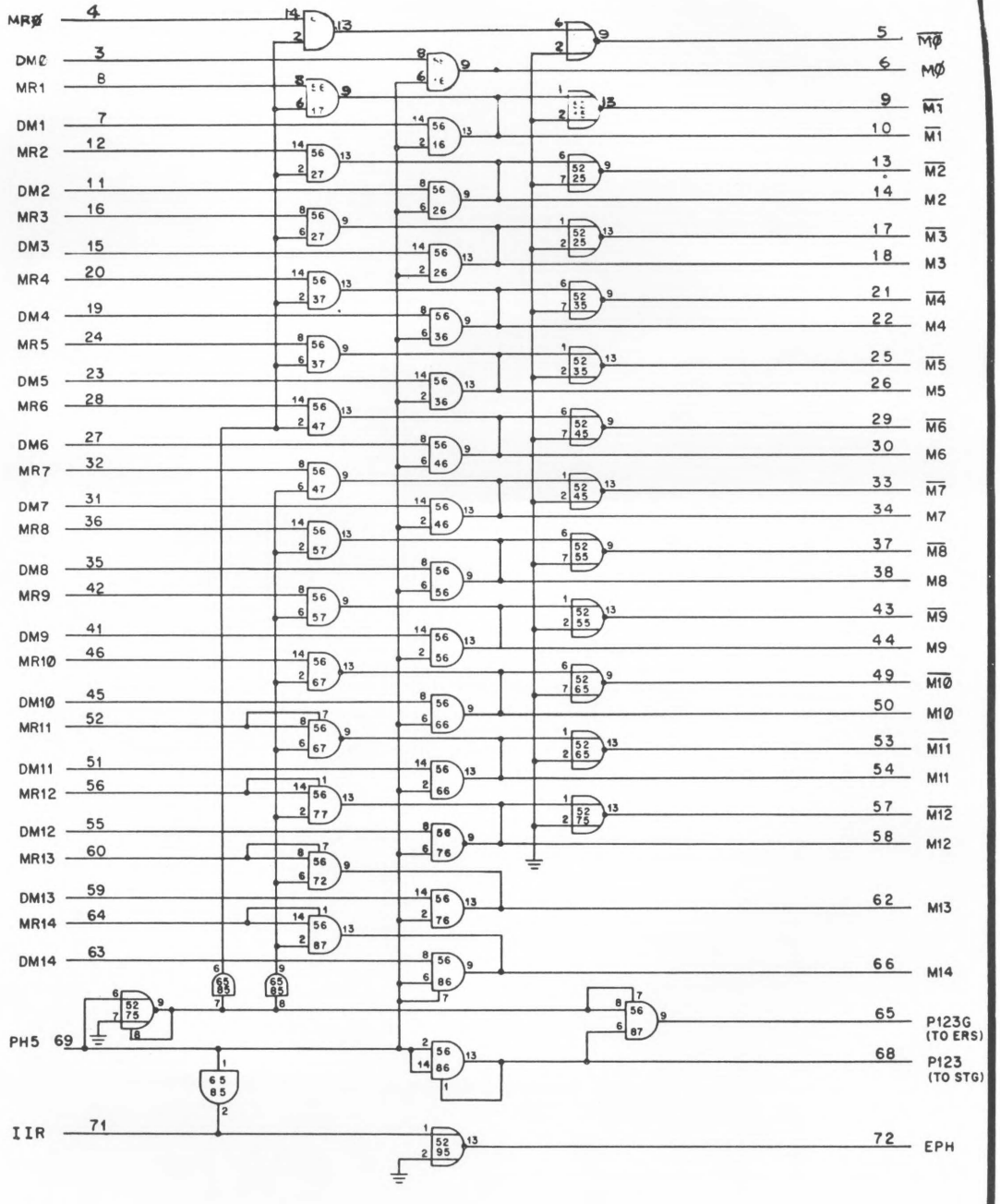

DIRECT MEMORY LOGIC

FIG. 4-16

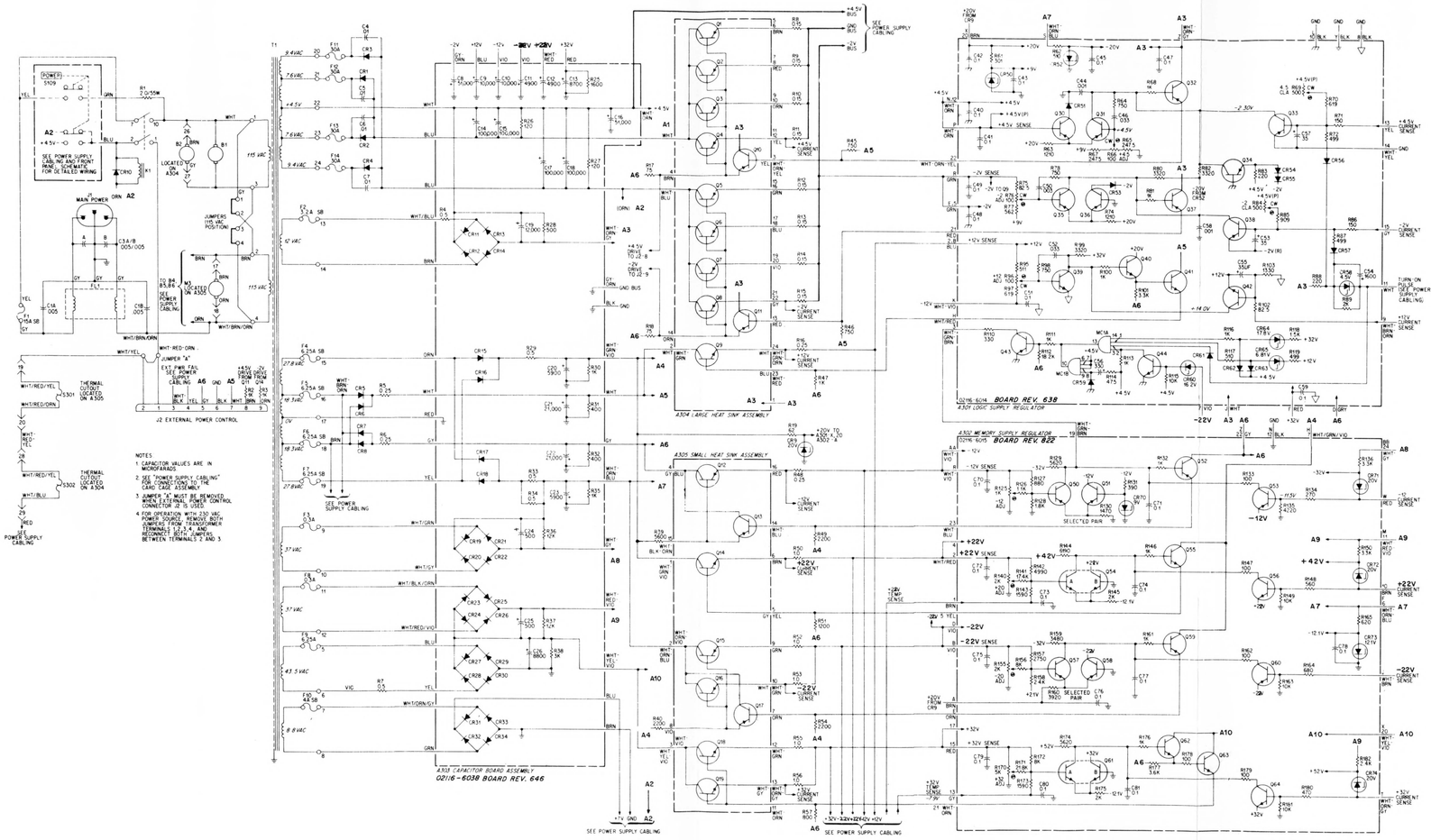

Capacitor Board A303, Typical Raw DC Voltages (See Note 5)

Test Point	Source Identification	Memory 8K	Memory 16K
A1	A303R26 (White Lead) to Collectors of A304Q1 thru A304Q4	- 3.9V	- 3.4V
A2	A303R27 (Orange Lead) to Collector of A304Q5 and CR10	- 6.0V	- 5.6V
A3	A303R28 (White-Orange-Gray Lead) to A304-1 and A301-2	-12.9V	-12.4V
A4	A303R30 (White-Green-Violet Lead) to A305-1, -15, A302-7, -H, R19, R44, R54	+36.9V	+35.5V
A5	A303R31 (White Lead) to A304-2, A301-J, R45, R46, and J2-7	+22.4V	+23.3V
A6	A303R32 (Gray Lead) to A305-4, A301-D, A302-2, -22, R47, R57, junction of R52 and R53, and J2-5	-23.8	-22.6
A7	A303R35 (White-Orange-Blue Lead) to A305-2, A301-8, and A302-6	-37.2	-36.4
A8	A303R36 (White-Gray Lead) to A302-24, -BB	-86.9	-84.5
A9	A303R37 (White-Red-Violet Lead) to A302-11, -M	+107	+105
A10	A303R38 (White-Yellow-Violet Lead) to A305-3 and A302-20, -X	+58.0	+56.4

Memory Supply Regulator A302, Typical Circuit Voltages (See Note 5)

Test Point	Description	DC Voltage Measurement
Q50	Emitter	- 8.3V
	Base	- 9.0V
	Collector	-14.0V
Q51	Emitter	- 8.3V
	Base	- 9.0V
Q52	Emitter	-13.1V
Q53	Base	-11.5V
Q54A	Emitter	- 0.7V
	Base	0.0V
	Collector	+24.5V
Q55	Emitter	+23.5V
Q56	Base	+21.7V
Q57	Emitter	+ 0.7V
	Base	0.0V
	Collector	-25.2V
Q58	Emitter	+ 0.7V
Q59	Emitter	-24.4V
Q60	Base	-21.4V
Q61A	Emitter	- 0.7V
	Base	0.0V
	Collector	+34.0V
Q63	Emitter	+32.6V
Q64	Base	+30.6V
A302-1 (+22V Temp Sense)		- 7.9V
A302-13 (+32V Temp Sense)		- 7.9V

Logic Supply Regulator A301, Typical Circuit Voltages (See Note 5)

Test Point	Description	DC Voltage Measurement
Q30	Base	+ 4.5V
Q31	Base	+ 4.5V
Q32	Emitter	- 1.2V
Q33	Base	+ 0.1V
	Collector	- 2.3V
Q35	Base	0.0V
Q37	Emitter	- 3.3V
Q38	Base	- 1.9V
	Collector	- 4.4V
Q39	Base	+ 0.7V
Q41	Emitter	+12.7V
Q42	Base	+11.3V
	Collector	+14.0V

NOTES:

1. Capacitor values are in microfarads.
2. See "Overall Computer Interconnection and Schematic Diagram" for connections to the Card Cage Assembly and Door Assembly.
3. Jumper "A" must be removed when external power control connector J2 is used.
4. For operation with 230 VAC power source, remove both jumpers from transformer terminals 1, 2, 3, and 4 and reconnect both jumpers between terminals 2 and 3.
5. Voltages specified are typical and mea sured under the following conditions:
   a. 115 VAC, 60 CPS main power input;
   b. All cards removed from the I/O slots except A201, A202, and slot containing Resistance Load Card 02116-6047;
   c. Computer in HALT mode;
   d. Minimum warm-up period of 30-minutes prior to taking measurements;
   e. Supply voltages set to -32V, -22.8V, -22.8V, +12V, -12V, +4.5V and -2V (all voltages ±1%) as measured at test jacks on Crowbar Assembly 02116-6284 (A121).

Power Supply Assembly (02116-6124), Schematic Diagram

FOR TRAINING PURPOSES ONLY

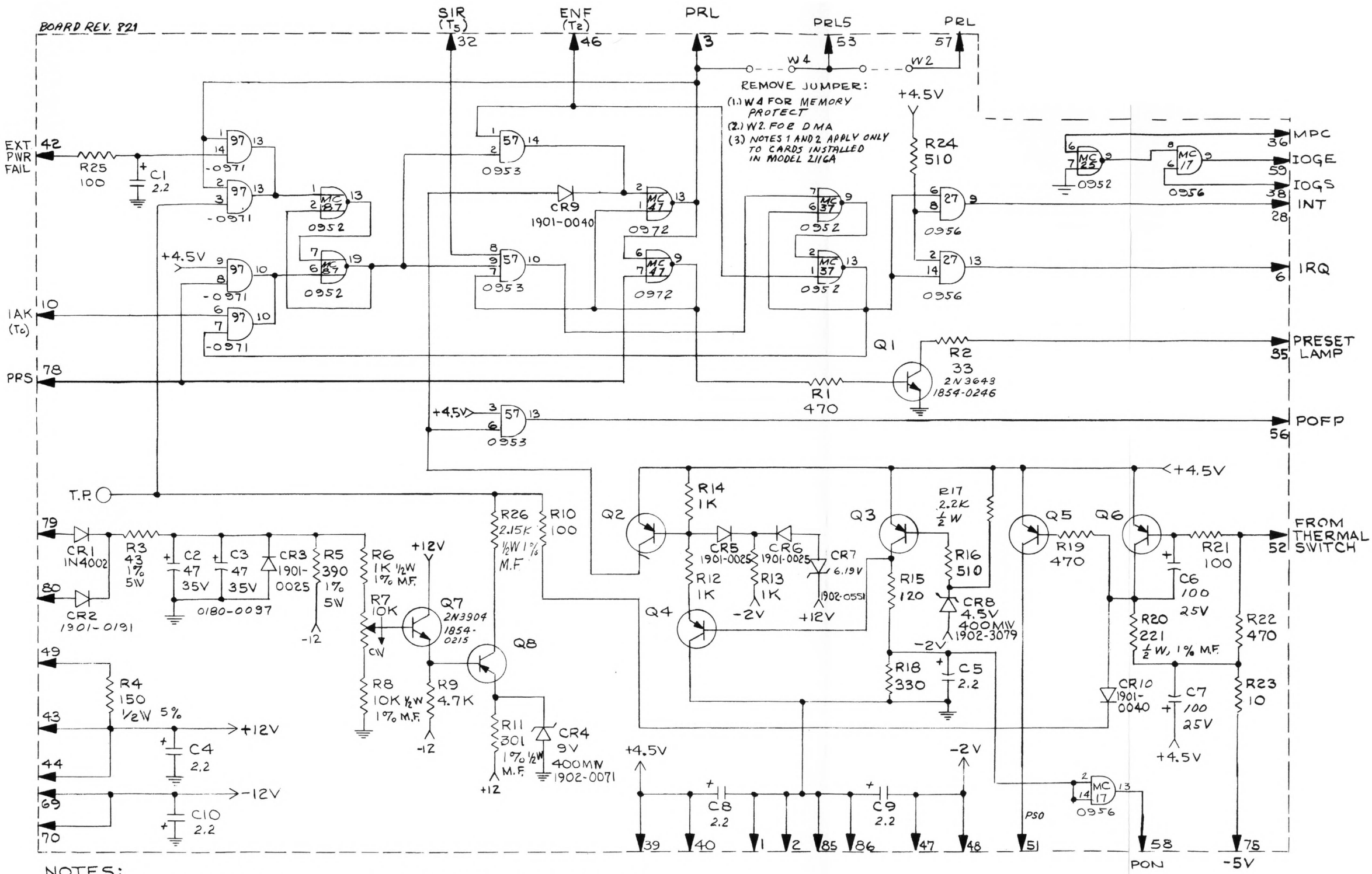

NOTES:
UNLESS OTHERWISE SPECIFIED
1. ALL RESISTOR
VALUES GIVEN IN OHMS
TOLERANCE ± 5%
1/4 WATT
2 ALL CAPACITOR
VALUES GIVEN IN MICROFARADS
3 ALL TRANSISTORS ARE 2N3906 (1853-0036)

ALL MC-PACKS PRECEDED BY 1820-

Power Fail Interrupt
Card (02116-6175), Logic Diagram

FOR TRAINING PURPOSES ONLY
HP 2116B

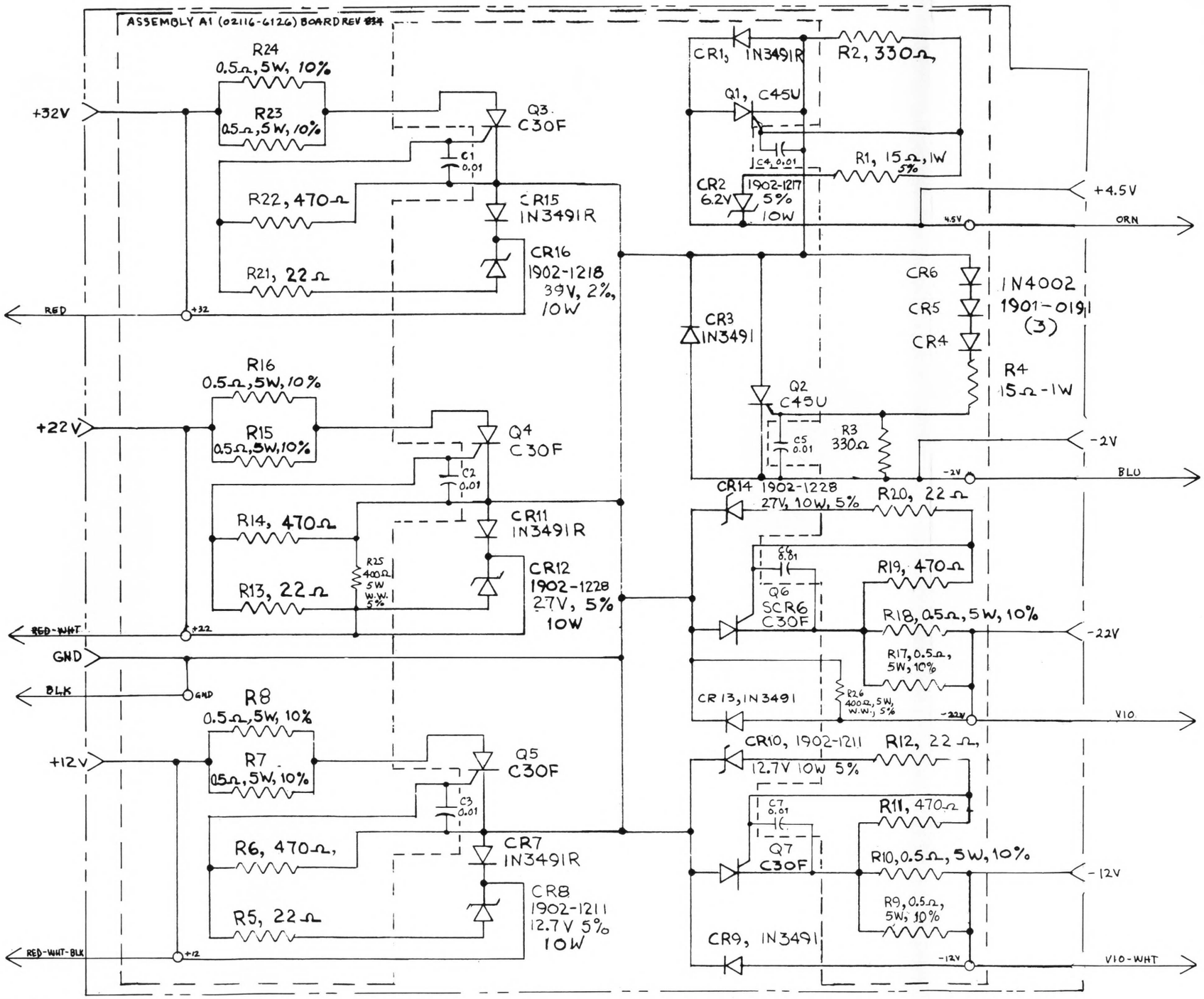

NOTE:
UNLESS NOTED
ALL RESISTORS 1/2 W 5% Comp.
ALL CAPACITORS 0.01 MFD, 100 WVDC,
-20 +80 %, DISC CERAMIC. PART
NO. 0150-0093

Overvoltage Protection
Assembly (02116-6284), Schematic
Diagram

FOR TRAINING PURPOSES ONLY
HP 2116B

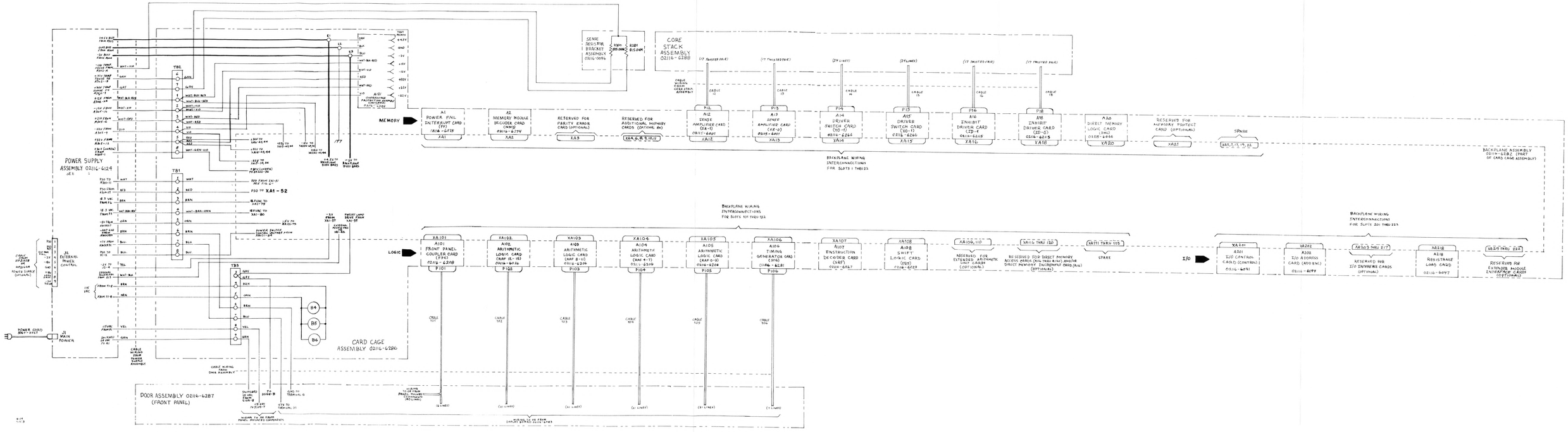

Model HP 2116B Computer, Overall Interconnection Diagram

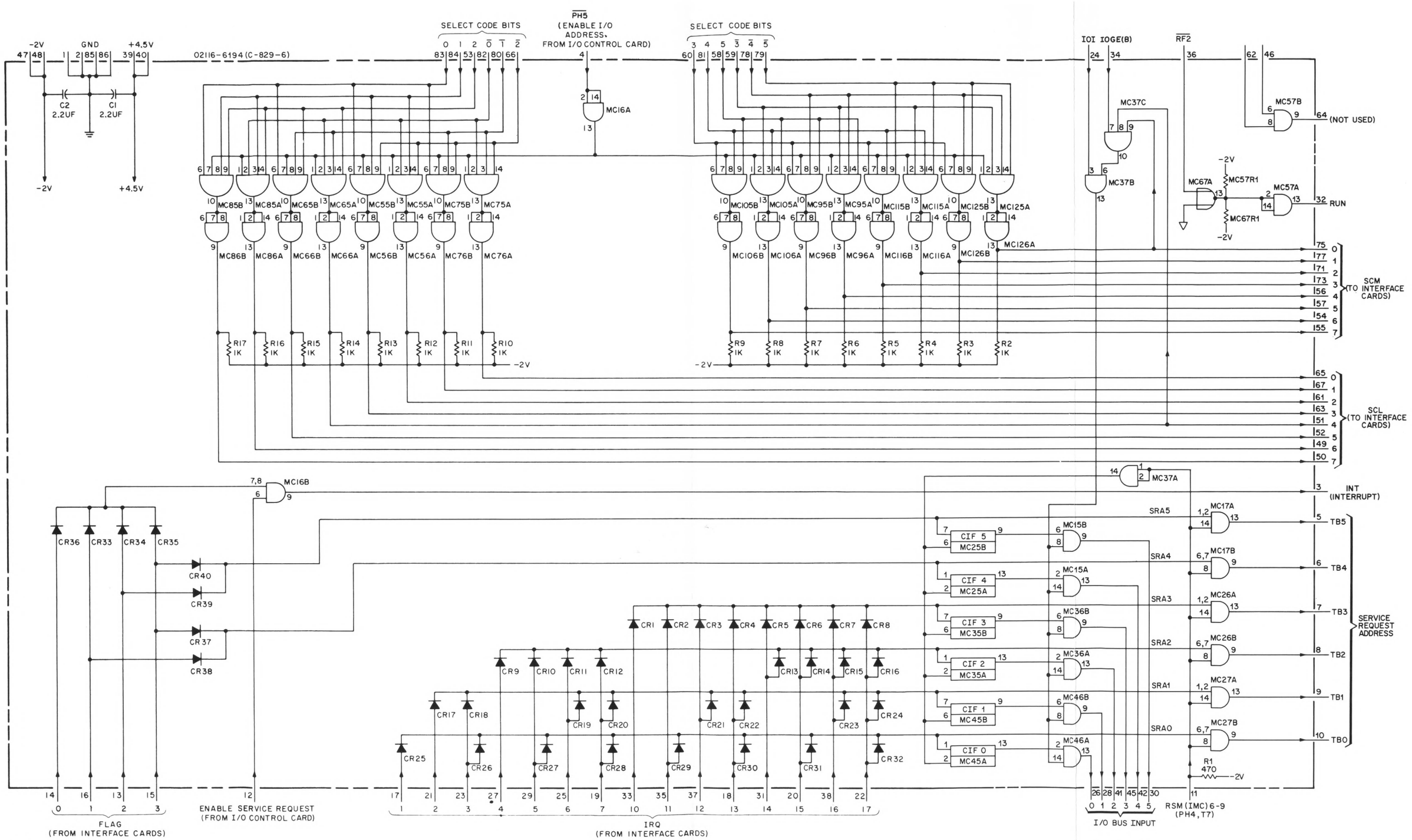

NOTE:

1. ALL LOGIC IS POSITIVE-TRUE.

I/O Address Card

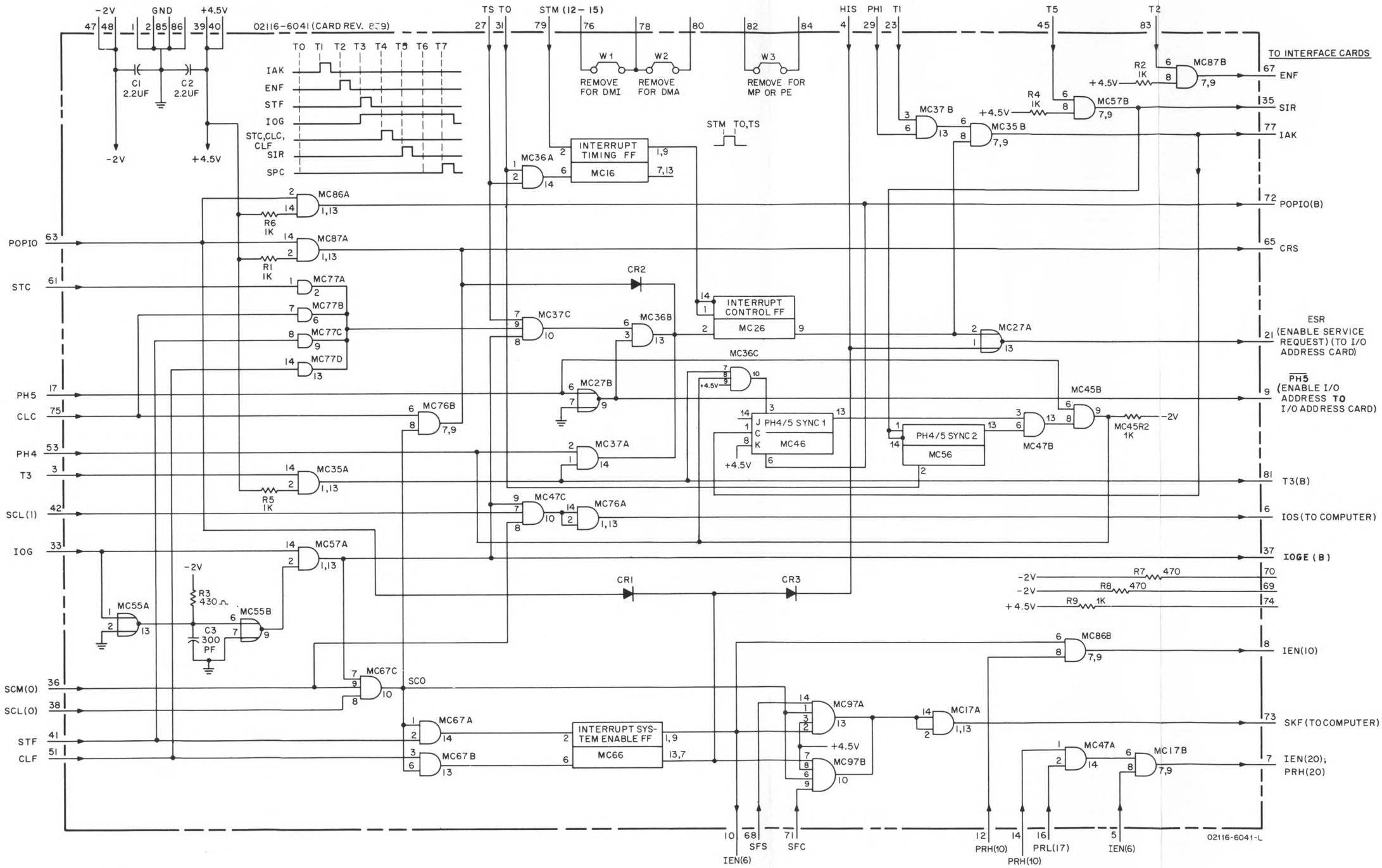

NOTES:

1. ALL LOGIC IS POSITIVE-TRUE.
2. THE TIMING CHART DOES NOT RELATE SIGNALS TO THE MACHINE PHASE IN WHICH THEY OCCUR.

I/O Control Card

FOR TRAINING PURPOSES ONLY

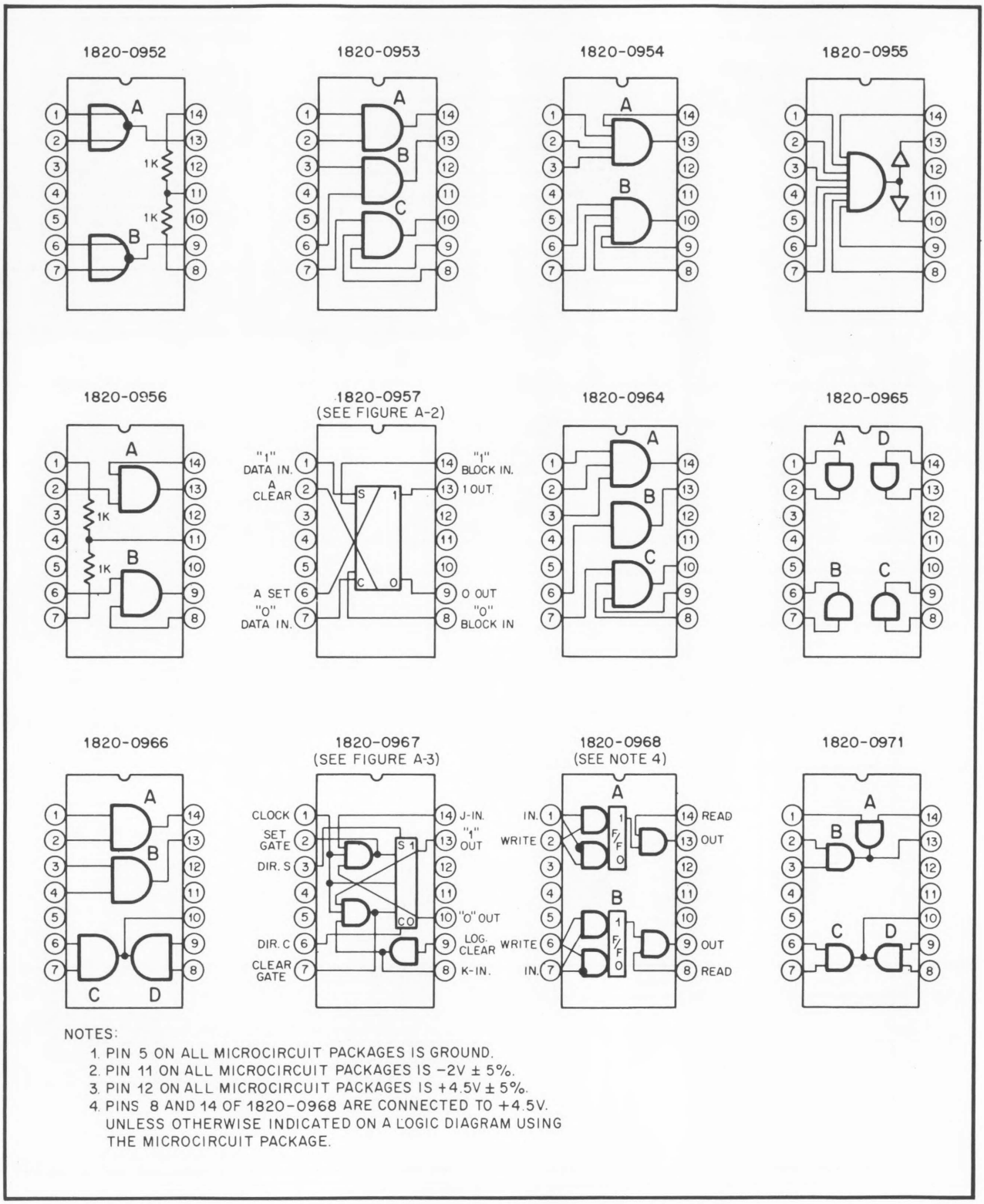

NOTES:

1. PIN 5 ON ALL MICROCIRCUIT PACKAGES IS GROUND.
2. PIN 11 ON ALL MICROCIRCUIT PACKAGES IS −2V ± 5%.
3. PIN 12 ON ALL MICROCIRCUIT PACKAGES IS +4.5V ± 5%.
4. PINS 8 AND 14 OF 1820-0968 ARE CONNECTED TO +4.5V. UNLESS OTHERWISE INDICATED ON A LOGIC DIAGRAM USING THE MICROCIRCUIT PACKAGE.

Logic Diagrams for Microcircuit Packages, Top View

FOR TRAINING PURPOSES ONLY
HP2116B

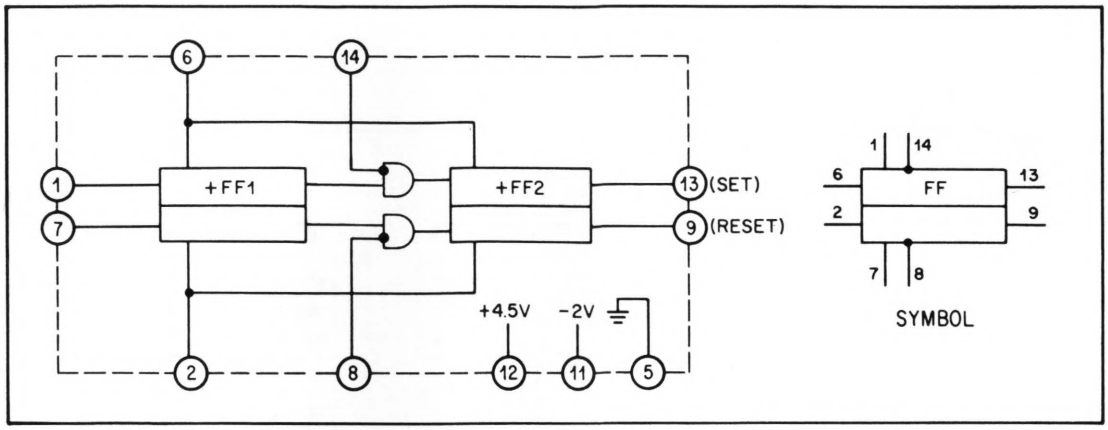

Simplified Logic Diagram of 1820-0957 Microcircuit Package

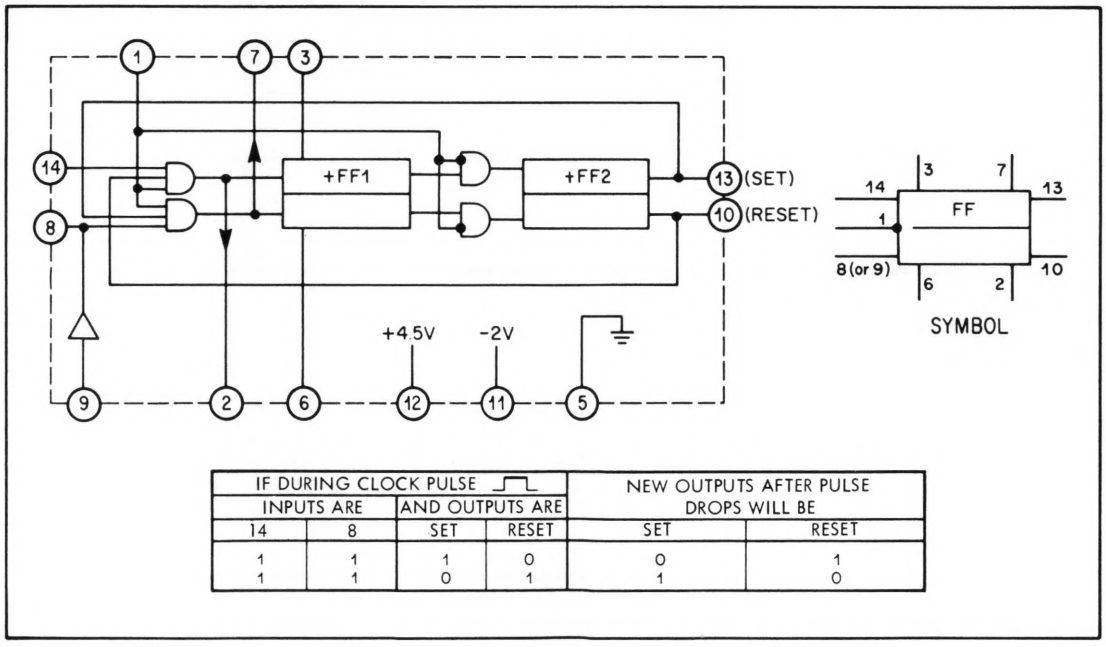

IF DURING CLOCK PULSE ⎍ INPUTS ARE		AND OUTPUTS ARE		NEW OUTPUTS AFTER PULSE DROPS WILL BE	
14	8	SET	RESET	SET	RESET
1	1	1	0	0	1
1	1	0	1	1	0

Simplified Logic Diagram of 1820-0967 Microcircuit Package

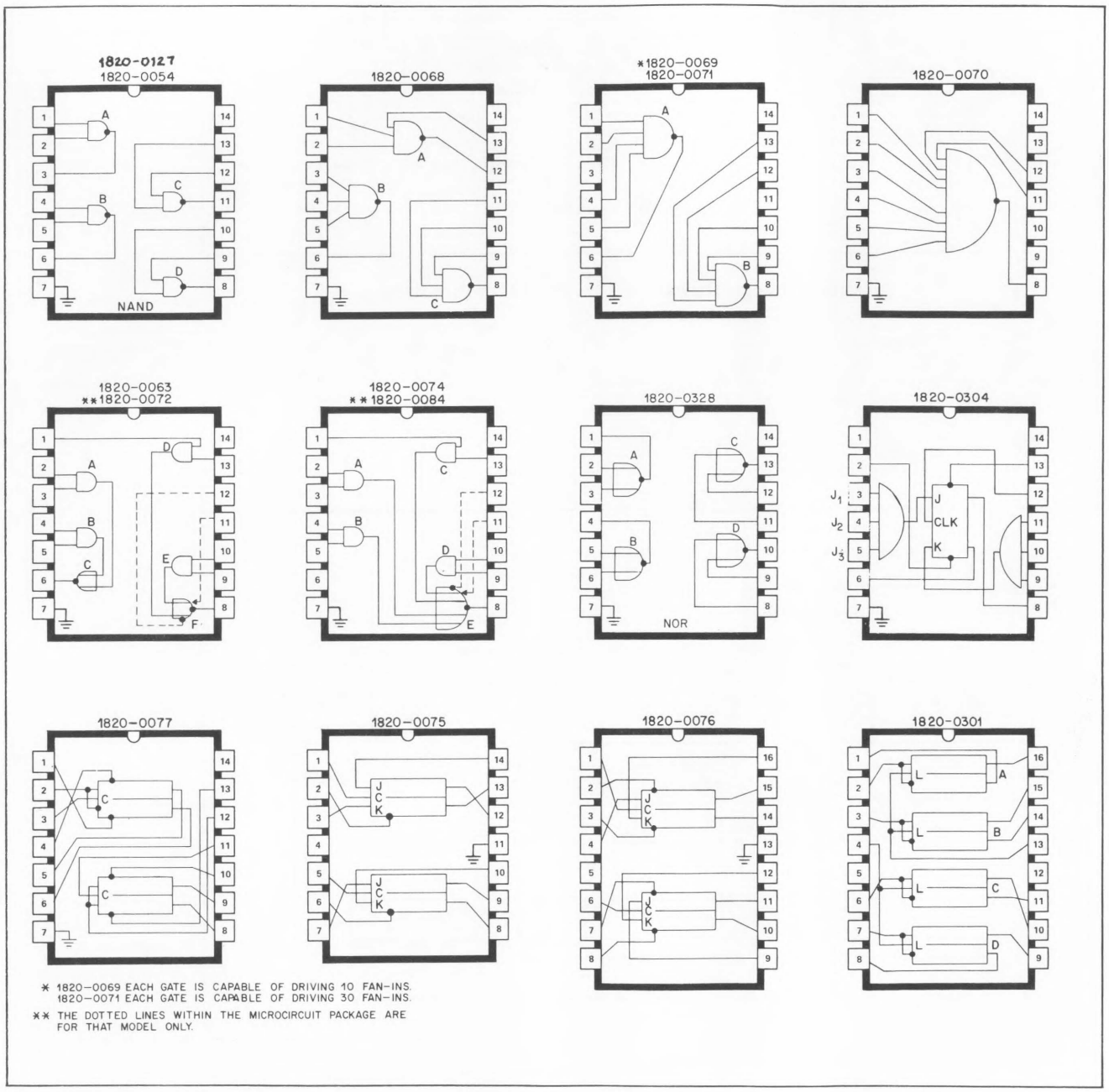

* 1820-0069 EACH GATE IS CAPABLE OF DRIVING 10 FAN-INS.
1820-0071 EACH GATE IS CAPABLE OF DRIVING 30 FAN-INS.

** THE DOTTED LINES WITHIN THE MICROCIRCUIT PACKAGE ARE FOR THAT MODEL ONLY.

Logic Diagram for Microcircuit Packages, Top View

FOR TRAINING PURPOSES ONLY
HP 2116B

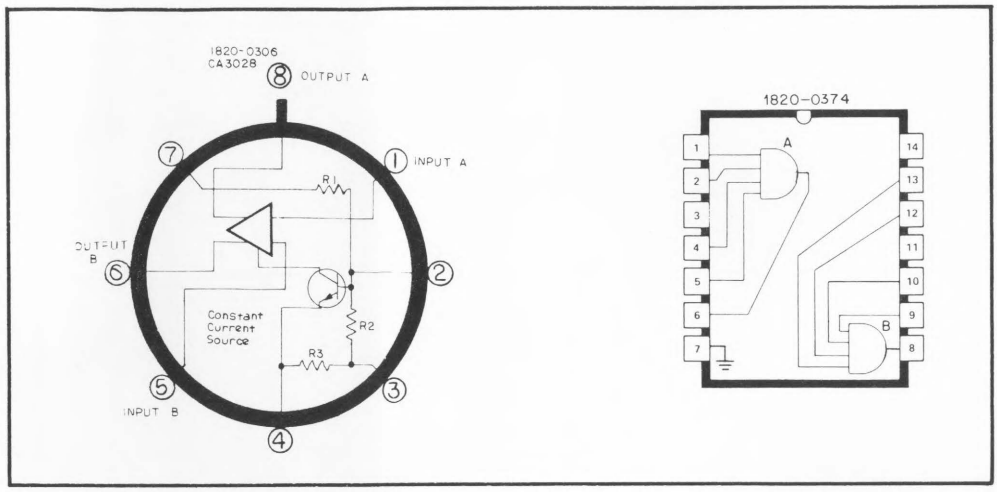

Logic Diagram for Microcircuit Packages 1820-0306 and 1820-0374

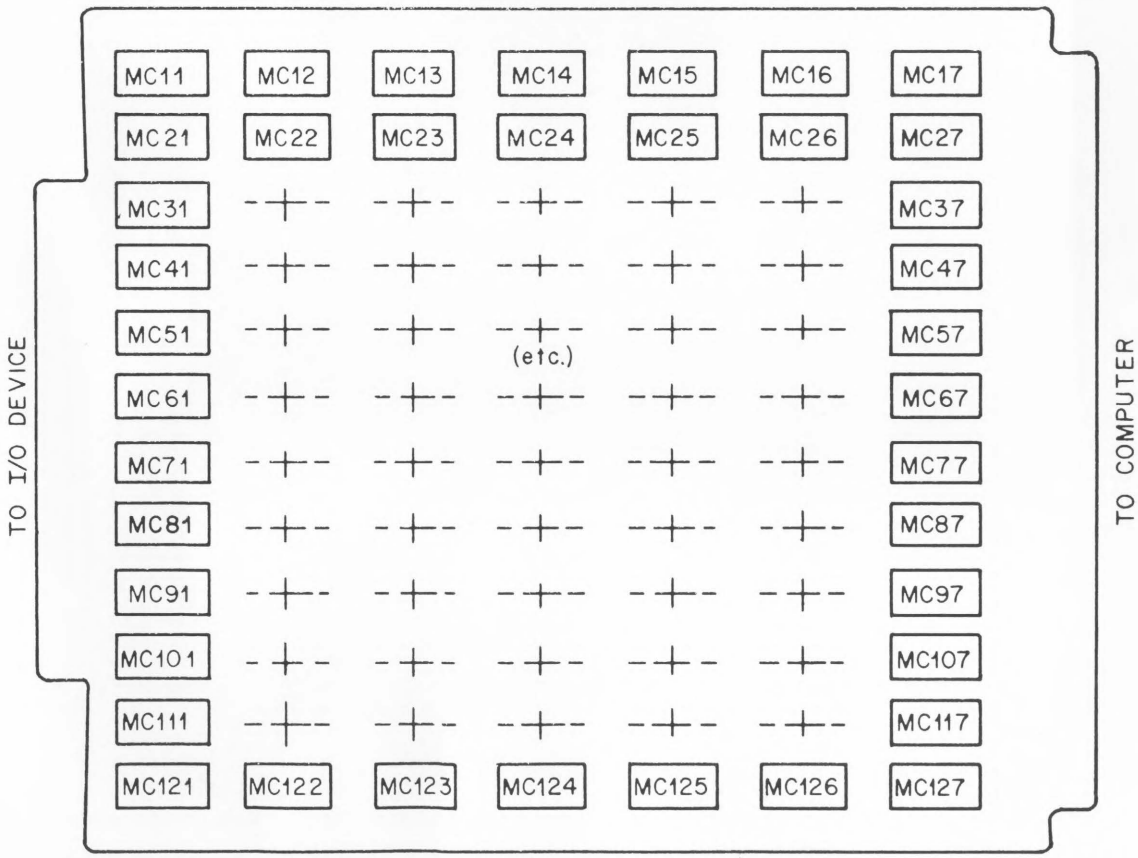

NOTE: A Microcircuit Package always assumes the reference designation assigned to its location on the card as illustrated in this figure.

Microcircuit Package Locations

HP 2115A logic diagrams

VII

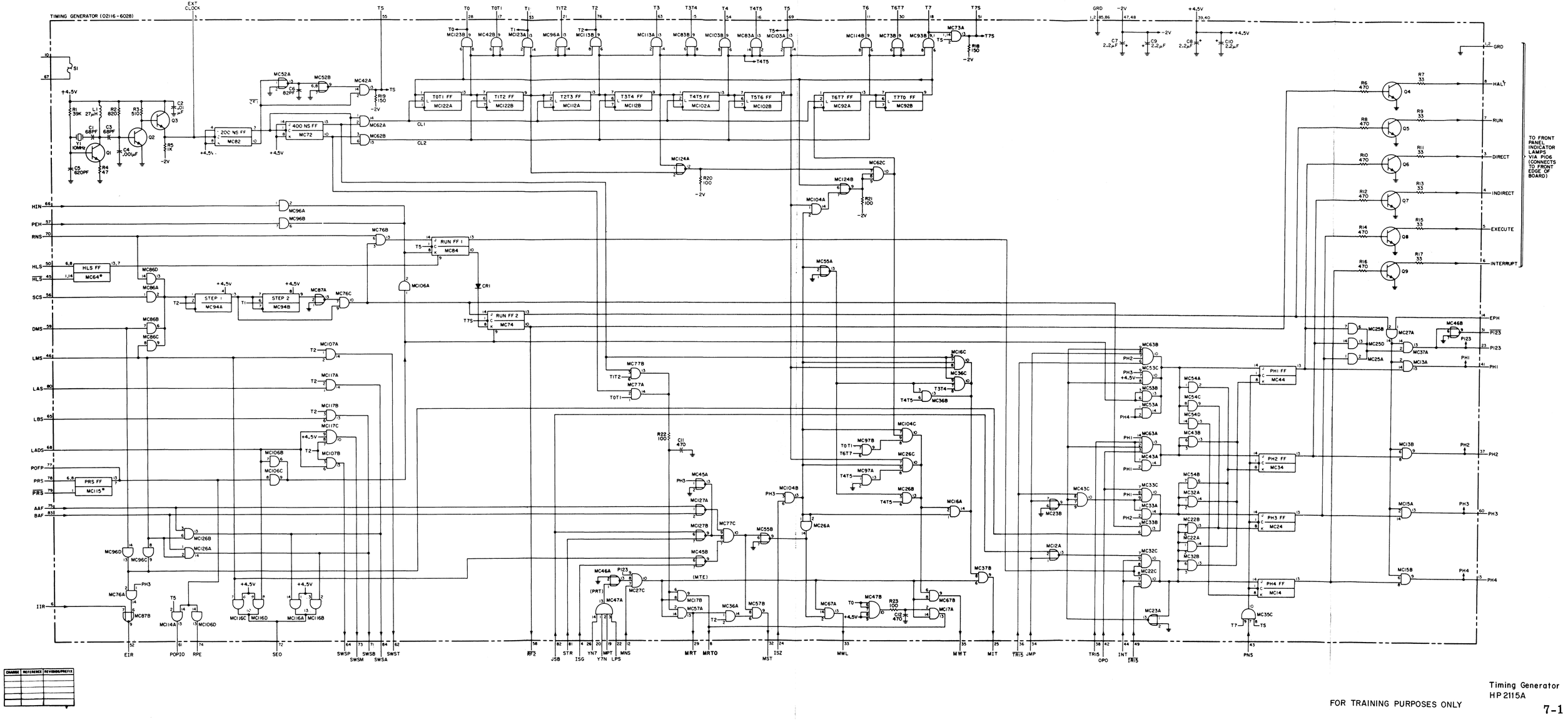

CHANGE	REFERENCE	REVISION/PREFIX

FOR TRAINING PURPOSES ONLY

Timing Generator
HP 2115A

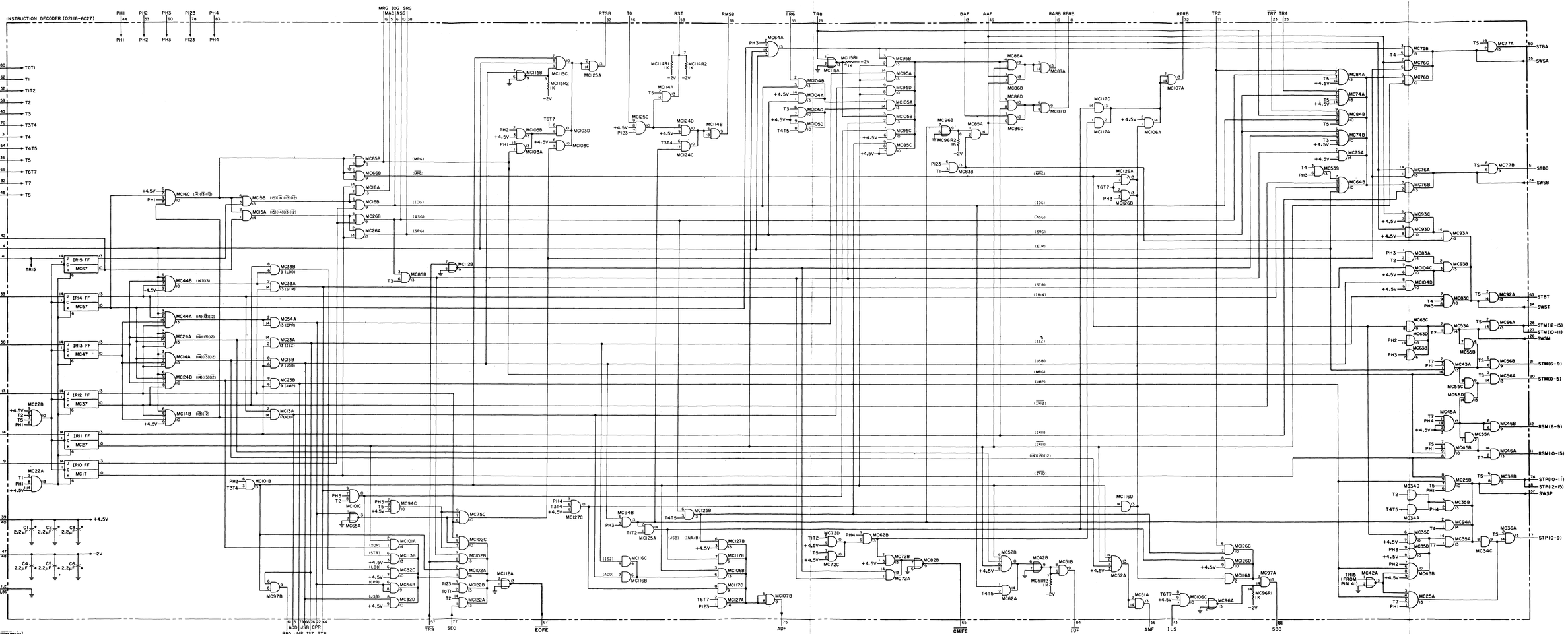

CHANGE	REFERENCE	REVISION/PREFIX

Instruction Decoder
HP 2115A

FOR TRAINING PURPOSES ONLY

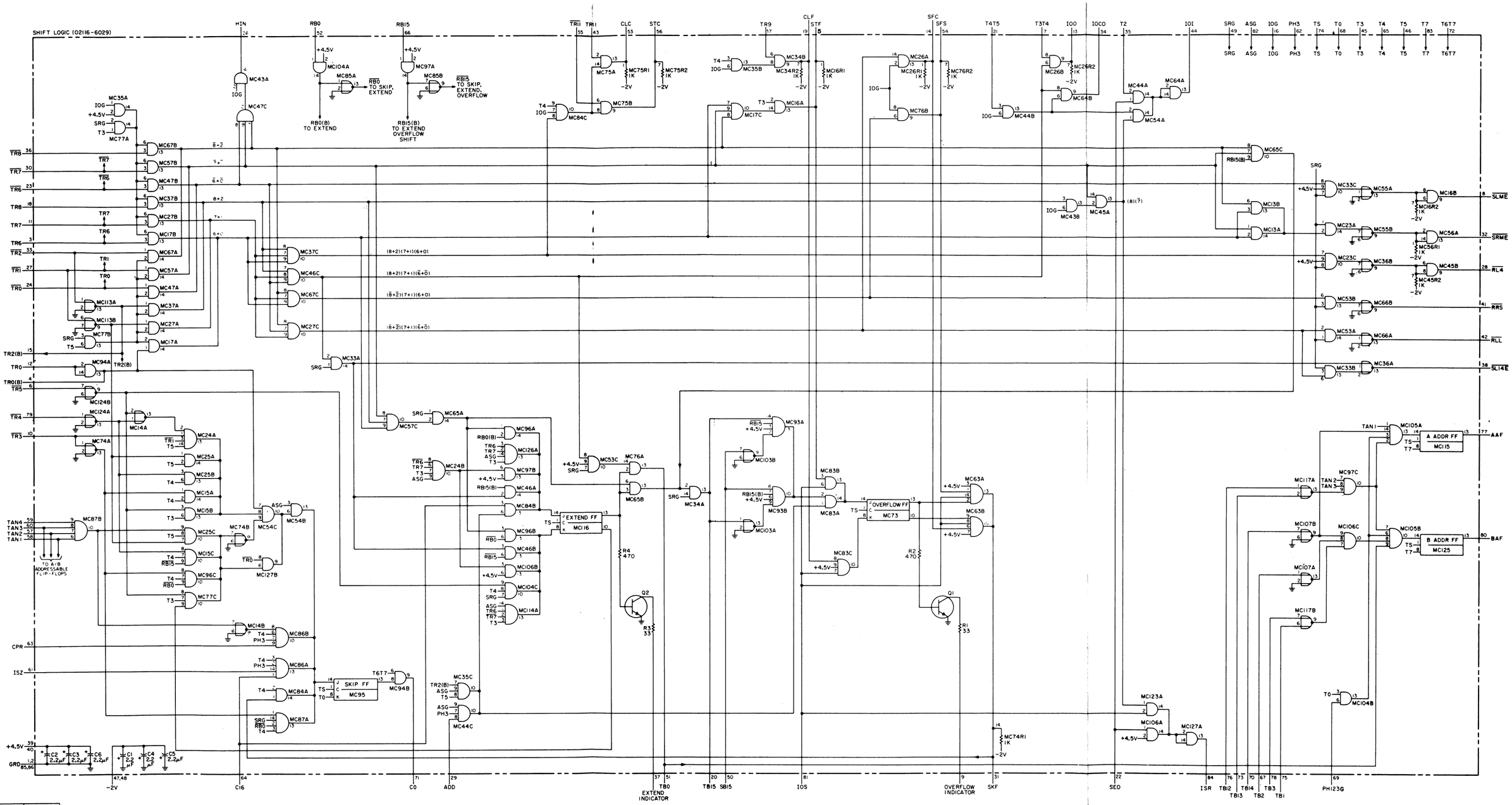

CHANGE	REFERENCE	REVISION/PREFIX

Shift Logic
HP 2115A

FOR TRAINING PURPOSES ONLY

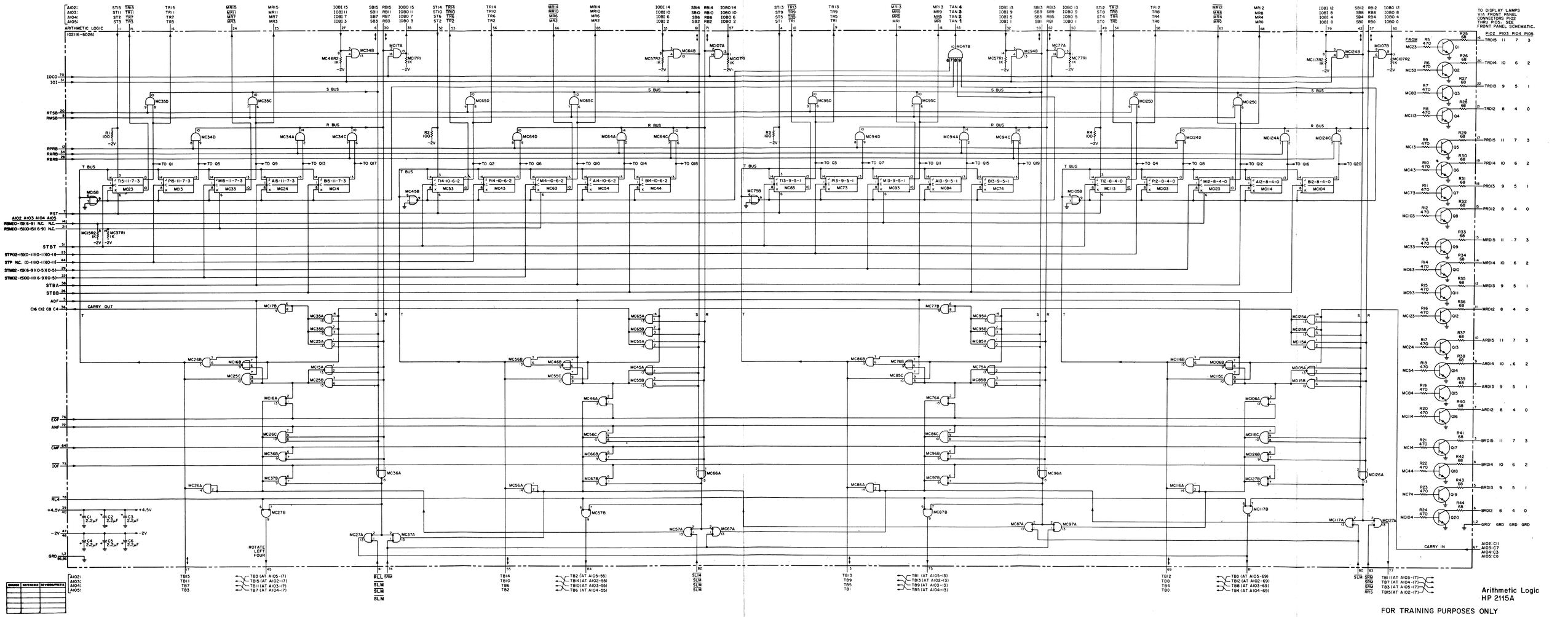

Arithmetic Logic
HP 2115A

FOR TRAINING PURPOSES ONLY

SYM	REVISIONS	APPROVED	DATE
A	AS ISSUED LG	11-7-67	

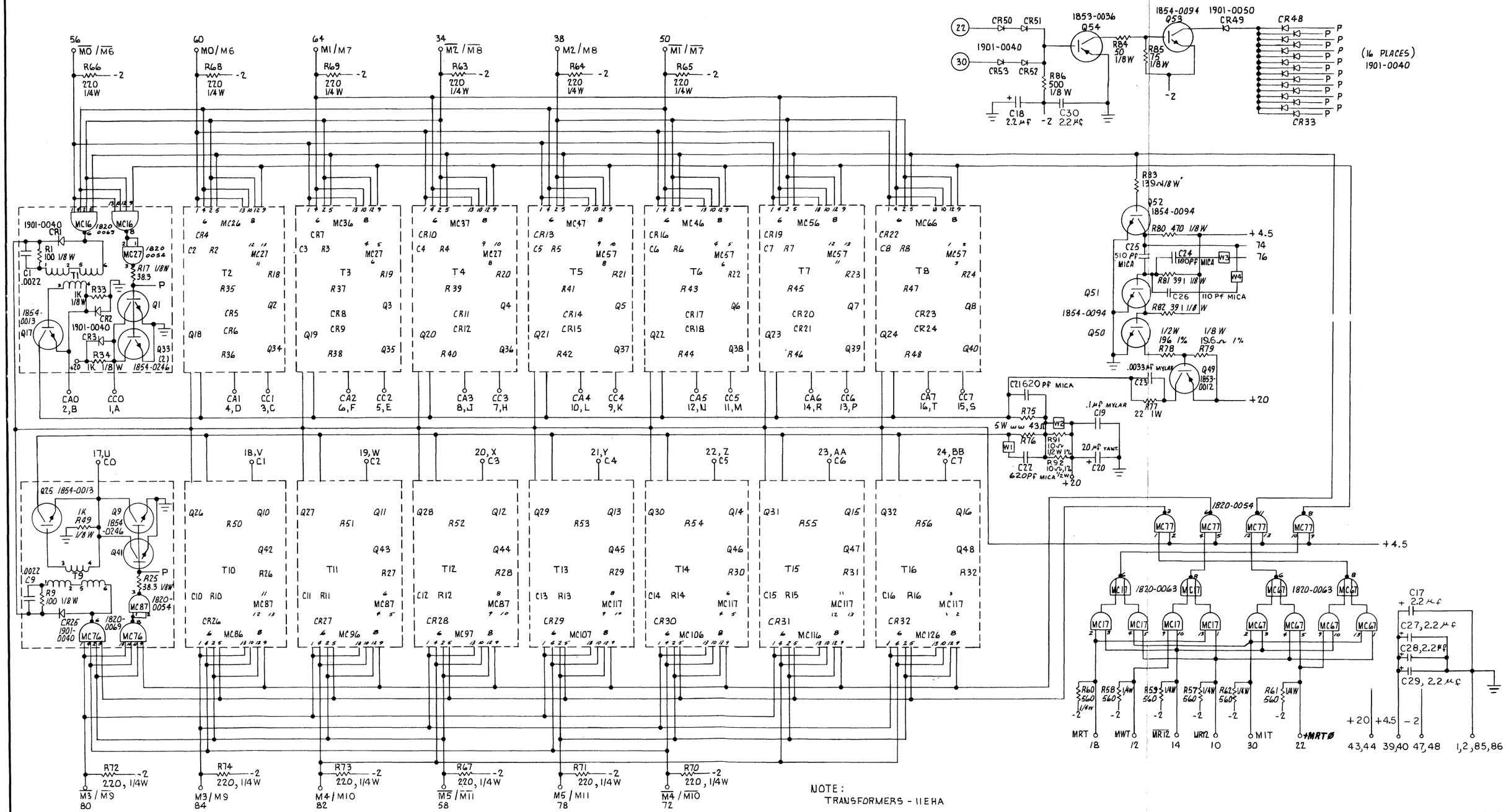

Driver Switch
HP 2115A

FOR TRAINING PURPOSES ONLY

REVISIONS			
SYM	DESCRIPTION	DATE	APPROVAL
A	REVISED PIN CONN LG	6-13-67	
B	ADDED C4-25, Q3, 17 EMITTER RES. R167-169 REVISED PIN CONN LG	9-12-67	
C	ADDED 17 VARIABLE RES LG	10-13-67	
	AND MRT CIRCUIT		
D	REMOVED MRT CIRCUIT LG	10-31-67	

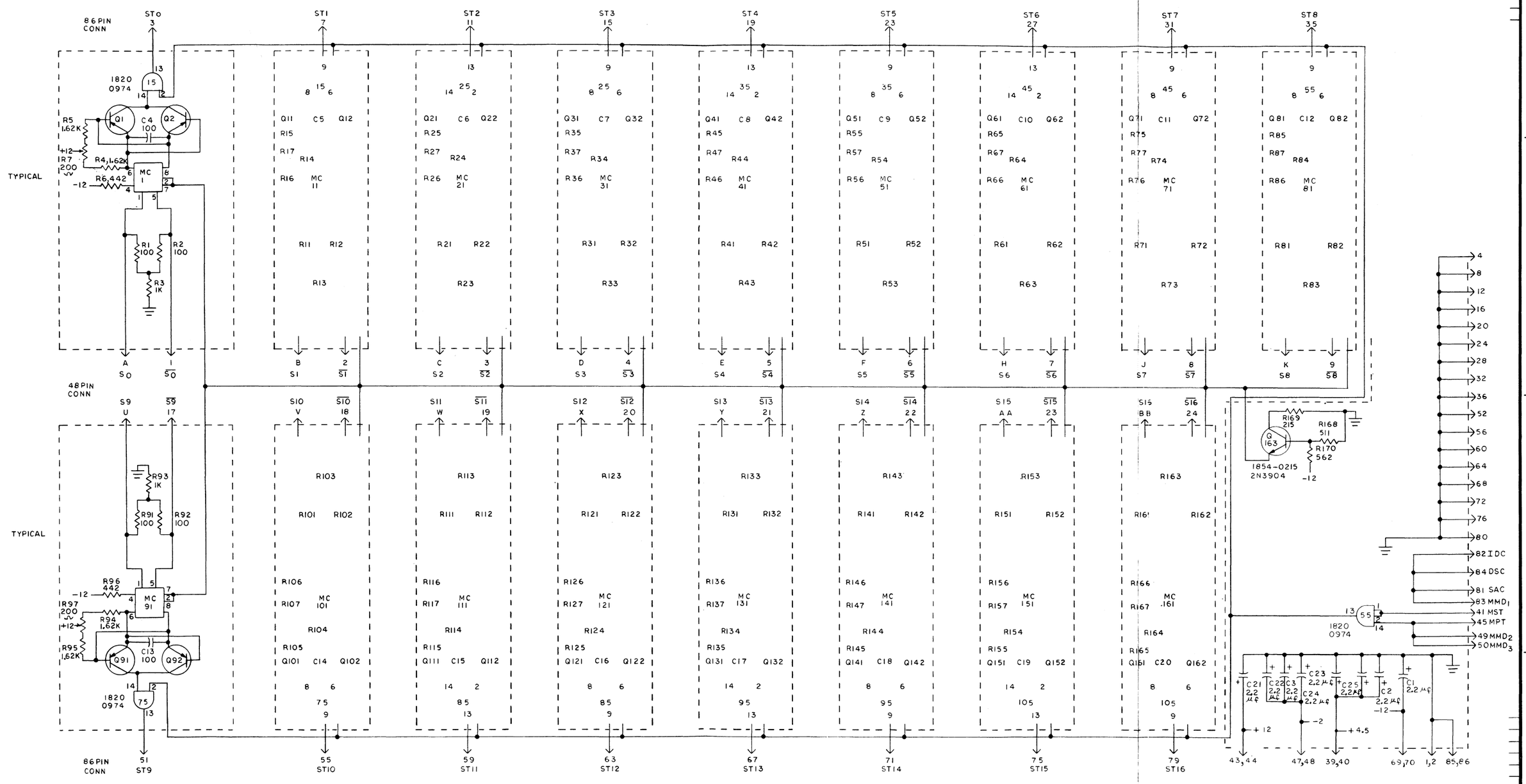

NOTE
UNLESS OTHERWISE NOTED
ALL INTEGRATED CKTS ARE 1820-0306
ALL TRANSISTORS ARE 1853-0036
ALL RESISTORS 1/8W 1% MF

(15) REF DES (MC15)

Sense Amplifier
HP 2115A

FOR TRAINING PURPOSES ONLY

REVISIONS			
SYM	DESCRIPTION	DATE	APPROVAL
A	ADDED CO-22, Q17-33, CHG PACK NOS	8-17-67	
B	ADDED C23-25, DELETED R17-33 LG	10-10-67	
C	R17-26 LG	12-5-67	

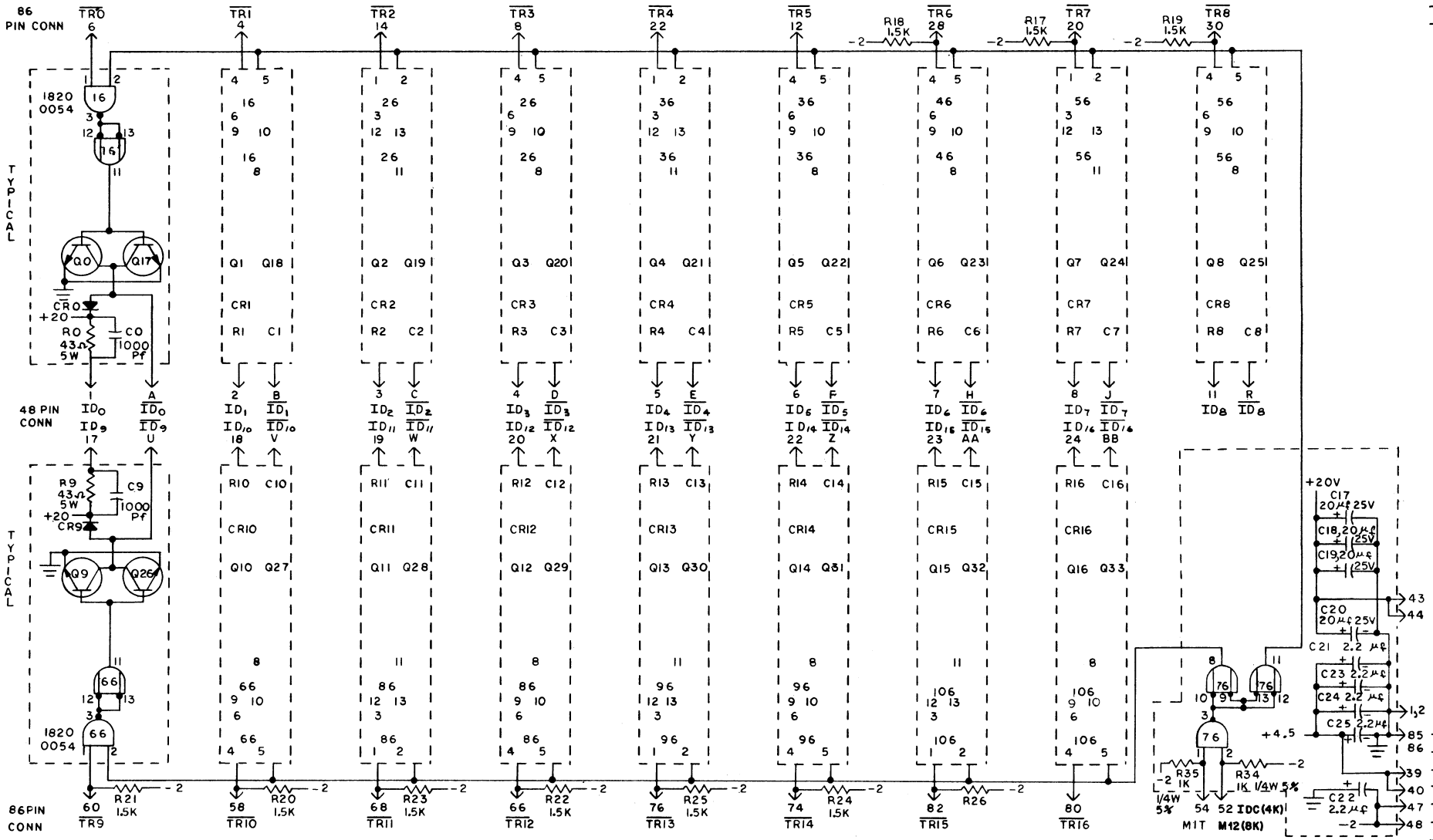

NOTE
UNLESS OTHERWISE NOTED
ALL DIODES 1901-0050
ALL TRANSISTORS 2N3643
ALL RESISTORS 1/4W 5%

24 LOCATION (MC 24)

Inhibit Driver
HP 2115A

FOR TRAINING PURPOSES ONLY

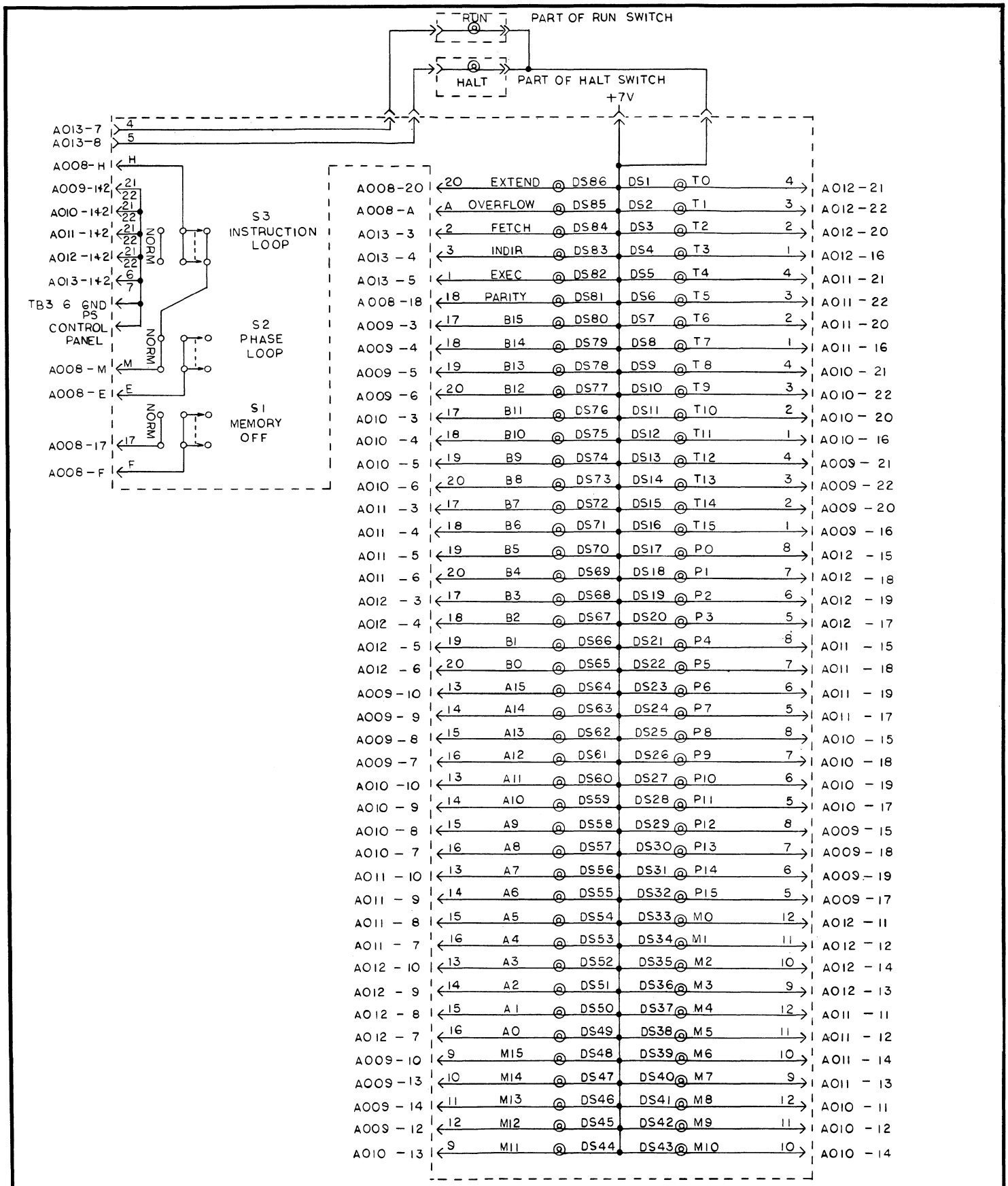

Display Board And
Run Halt Lamps
HP 2115A

FOR TRAINING PURPOSES ONLY

REVISIONS			
SYM	DESCRIPTION	DATE	APPROVAL

COMMON ANODE FOR WRITE
COMMON CATHODE FOR READ

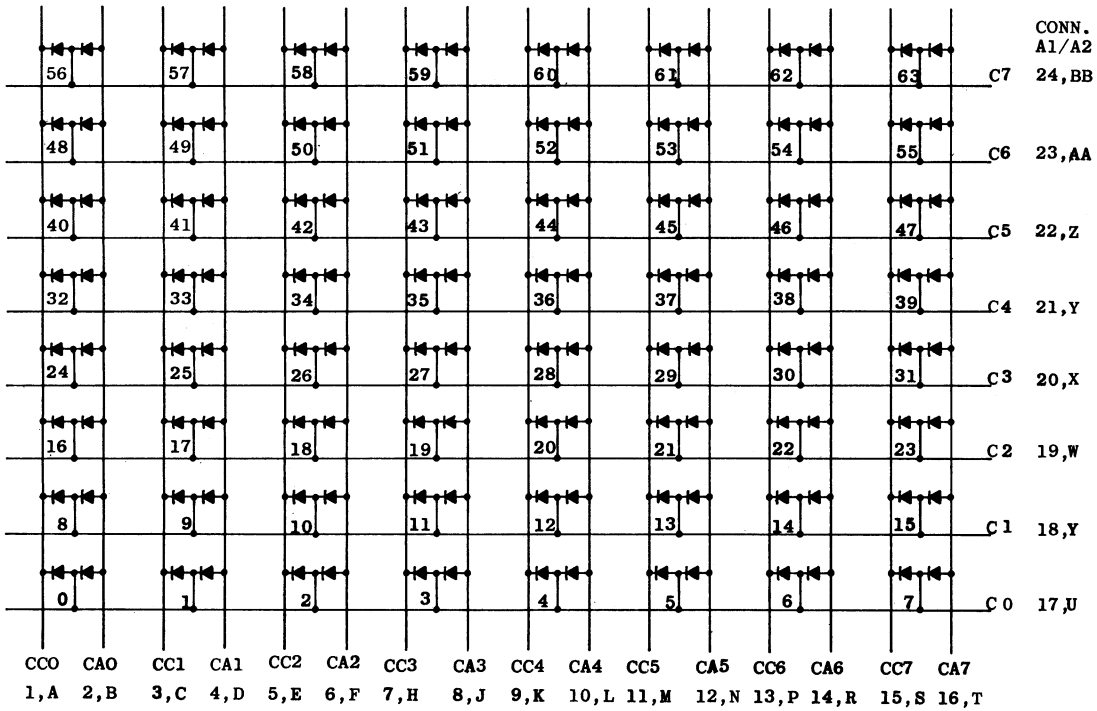

Wiring Info
HP 2115A

FOR TRAINING PURPOSES ONLY

REVISIONS			
SYM	DESCRIPTION	DATE	APPROVAL

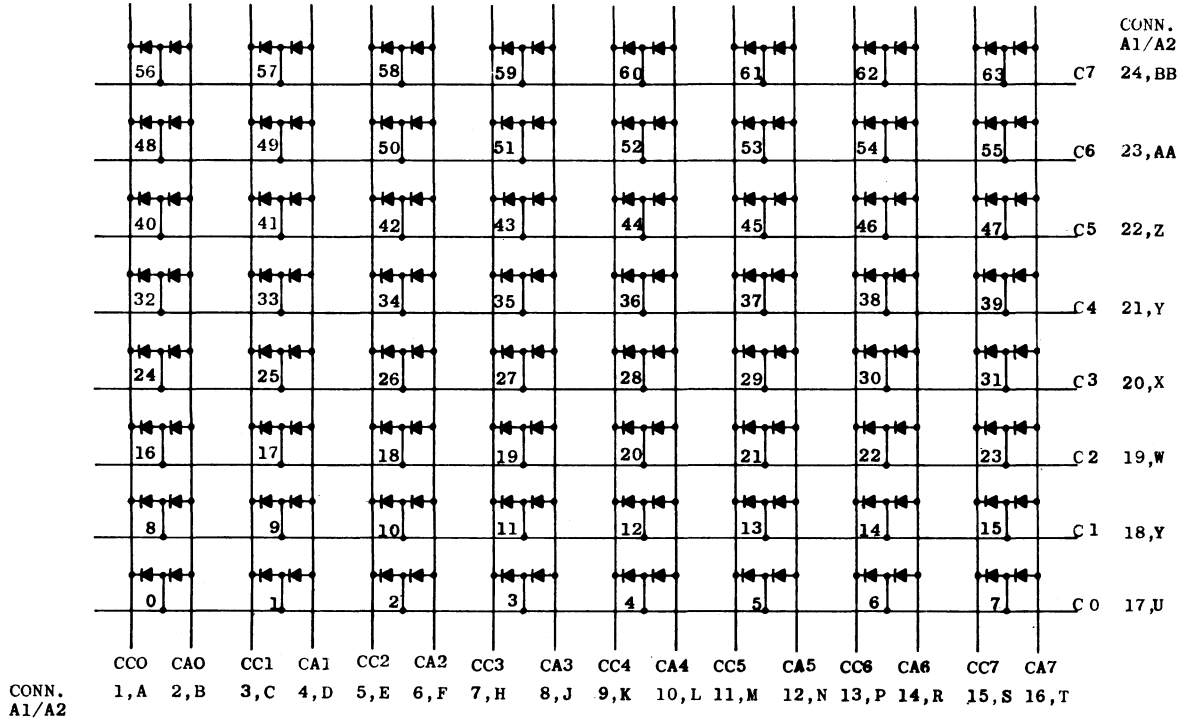

NOTE:

CURRENT DIRECTION ASSIGNMENTS

	MODULE 0 X and Y COORDINATES	MODULE 1 X COORDINATE
COMMON ANODE	WRITE	READ
COMMON CATHODE	READ	WRITE
DIGIT ASSIGNMENTS	A3 - INHIBIT A6 - SENSE	A4 - INHIBIT A7 - SENSE

Wiring Info
HP 2115A

FOR TRAINING PURPOSES ONLY

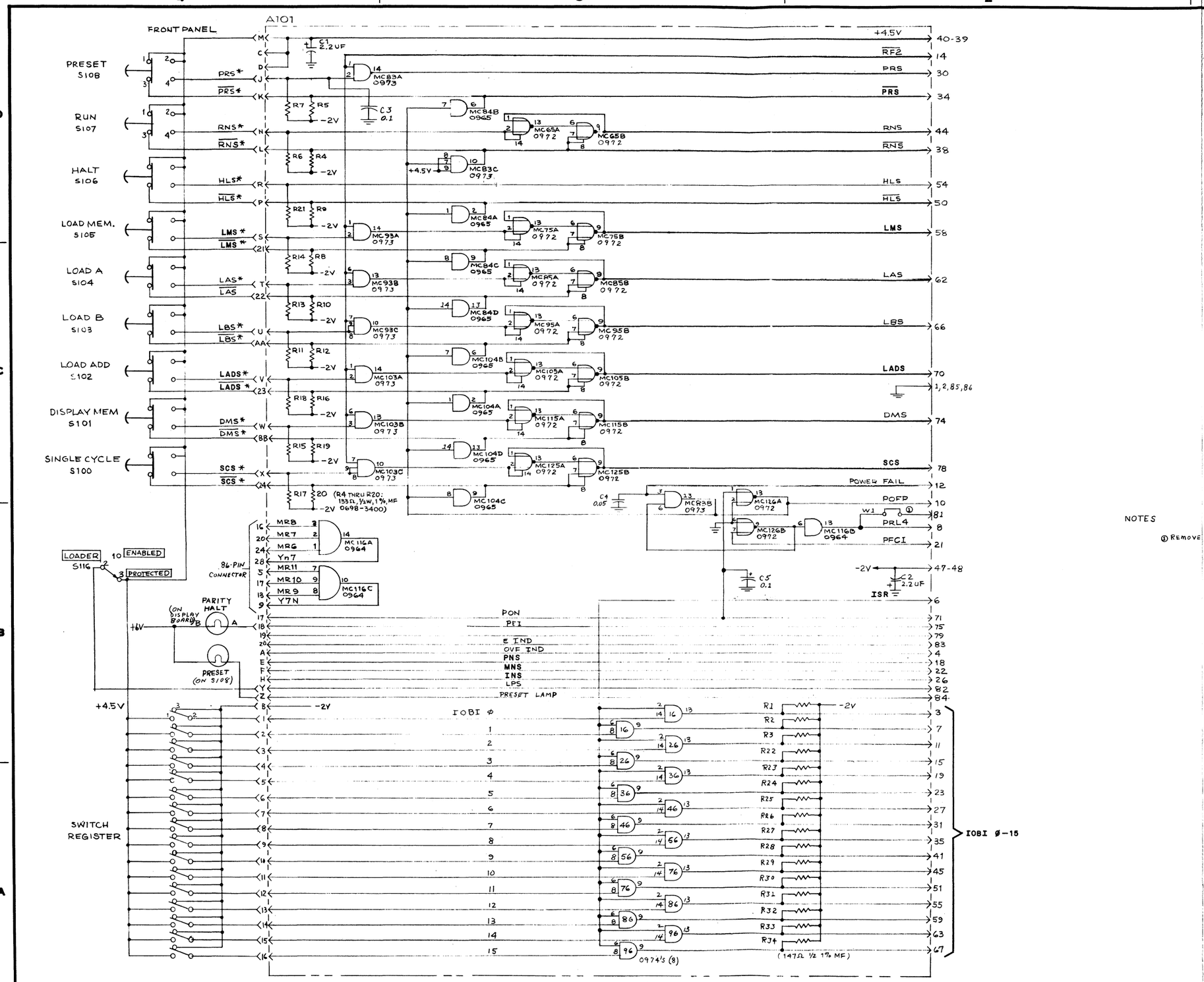

REVISIONS			
SYM	DESCRIPTION	DATE	APPROVAL
A	AS PER L. CORKERELL CORRECTIONS	1-2-68	JC

NOTES

① REMOVE W1 FOR DMA.

Front Panel
Coupler Schematic
HP 2115A

FOR TRAINING PURPOSES ONLY

REVISIONS			
SYM	DESCRIPTION	DATE	APPROVAL

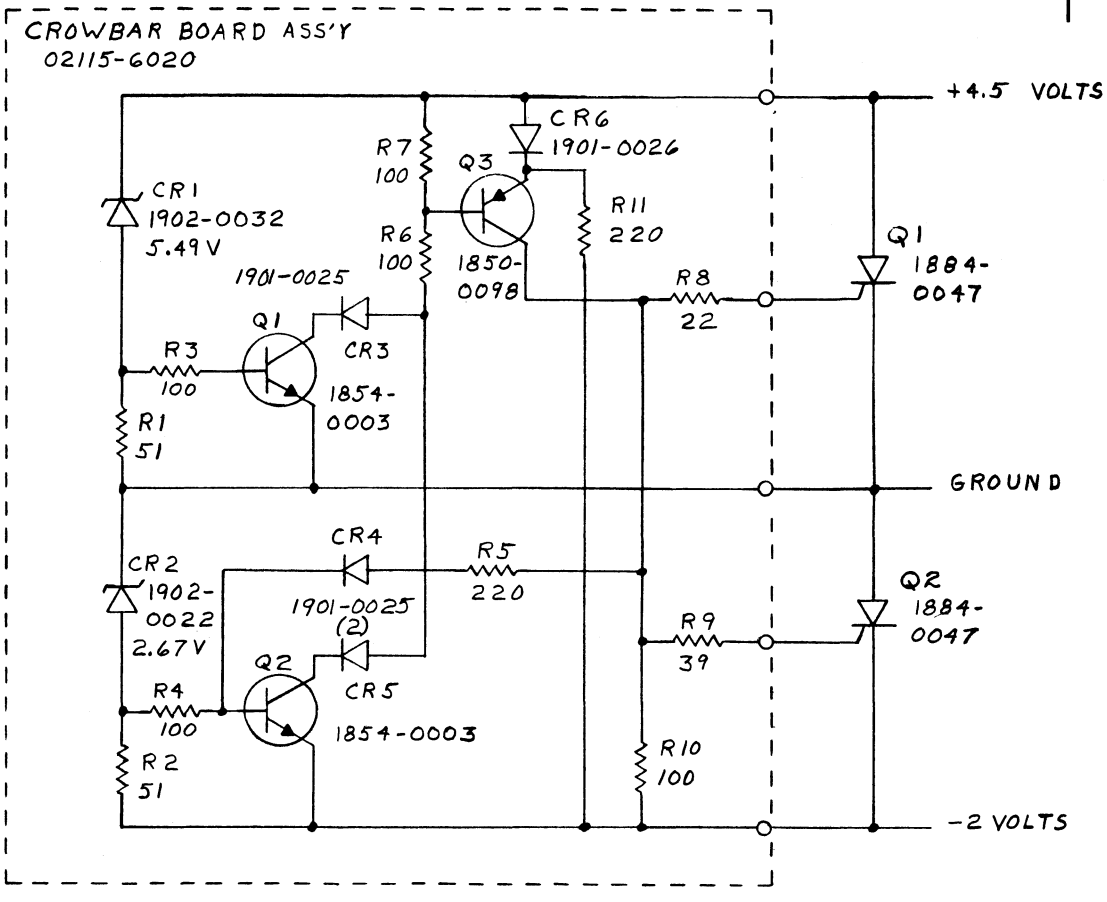

NOTE:
RESISTANCE IN OHMS
ALL RESISTORS ½W, 5%, COMP.

Crossbar Assembly
HP 2115 A

FOR TRAINING PURPOSES ONLY

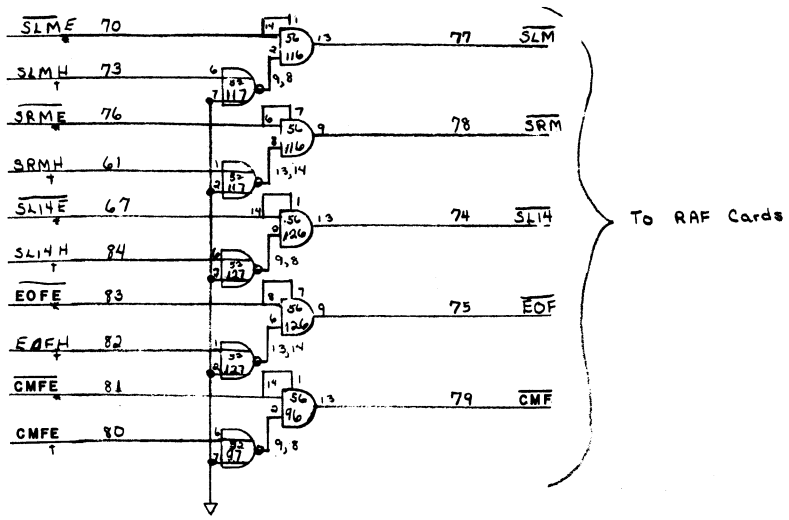

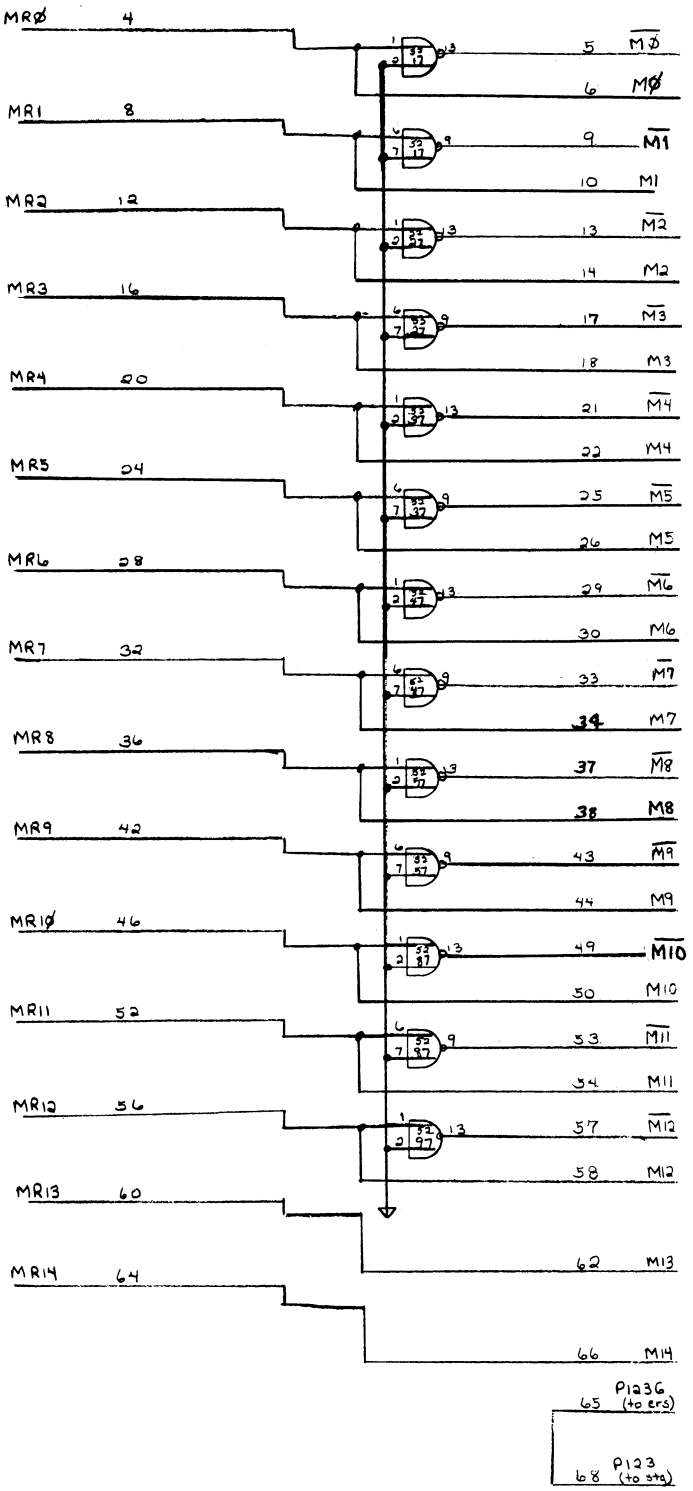

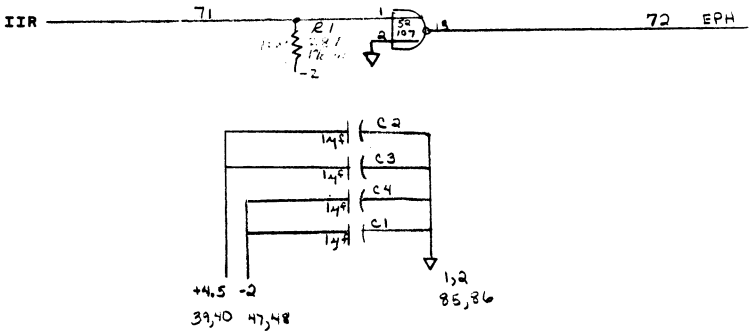

Memory Logic
HP 2115A

FOR TRAINING PURPOSES ONLY

laboratory projects

VIII

Laboratory Project # 1

Lesson: Logic Control and Timing

Objective: To give the student practice in using the Logic Equations and Backplane Wire List.

Problem: Find the source of the RBRB control function. Find and list the source and distribution of all logic signals required to generate RBRB when the B-Register is addressed as memory location ØØØØØ1.

Laboratory Project # 2

Lesson: Logic Control and Timing

Objective: To give the student practice in using Truth Tables and Boolean expressions.

Problem:

1. Write the Boolean expression for the circuit below:

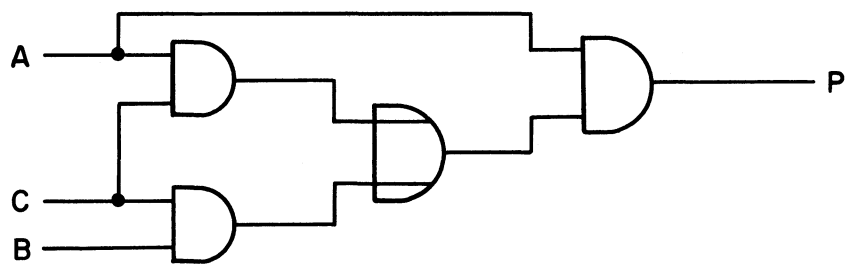

2. Reduce the equation obtained in step 1 and construct the circuit for the new equation.

3. Construct a Truth Table for the circuits derived in steps 1 and 2.

Laboratory Project #3

Lesson: System Timing and Control

Objective: To ensure that the student is knowledgeable of the time relationship of certain control signals.

Problem: Draw a timing chart consisting of actual waveforms observed when viewing the following signals, (FETCH phase only):

a. MRT
b. MWT
c. MST
d. MRT
e. RST
f. RMSB

Procedure:

1. Store the instruction LDA ØØØ1ØØ in memory location ØØØ1ØØ.
2. Load address ØØØ1ØØ into P & M Registers.
3. Depress PRESET and set the PHASE switch to LOOP.
4. Depress RUN.
5. Adjust the oscilloscope such that one time period equals one centimeter, i. e. TØ = 1 cm.

Laboratory Project #4

Lesson: Memory

Objective: To give the student experience in making the sense amplifier adjustment.

Problem: Properly adjust the sense amplifier circuits.

Procedure:

1. Open the front cover from the HP 2116B Computer.
2. With POWER off, disconnect the core stack connector from the Sense Amplifier board SA-0. Remove the board from the slot and install an Extender Board in its place. Then plug the Sense Amplifier board into the Extender, and reconnect the core stack to the Sense Amplifier using an Extender Cable. Switch POWER on.
3. Set SWITCH REGISTER to 000000 and press LOAD MEMORY, LOAD ADDRESS, LOAD A and LOAD B.
4. Set SWITCH REGISTER to 070000 and press LOAD A; then press SINGLE CYCLE once.
5. Set PHASE switch to LOOP (rear of front panel).
6. Set SWITCH REGISTER to 177777 and press LOAD A.
7. Press RUN.

   The Computer will run continuously with all T-Register lights on, indicating that 177777 is being stored in all memory locations.
8. Connect oscilloscope synchronization input to the test point on the Timing Generator Board.
9. Consecutively connect the oscilloscope vertical input to the collectors of the output transistor pairs (Q1/Q2, Q11/Q12, Q21/Q22, etc. through Q161/162) and adjust the corresponding balance adjustment (R7, R17, R27, etc. through R167) for the cleanest possible pulse. Use only the first displayed pulse for observation; disregard succeeding pulses. See Figure 2 for correct and incorrect waveforms.

10. Press HALT. Switch POWER off. Remove the Extender Board and Cable, install the Sense Amplifier board in its normal position, and set PHASE switch to NORM.

11. If the Computer has an 8K memory, repeat steps b through k using the other Sense Amplifier Board, SA-1.

12. Disconnect oscilloscope leads, and replace Computer cover.

Laboratory Project #5

Lesson: Input/Output System

Objective: To teach the student how to analyze I/O system failures and how to troubleshoot the I/O system.

Problem: While executing the accompanying program, the operator found the computer "hung" in a loop. He halted the computer and reinstated his program. The computer then read one character and "hung" in the same loop again.

SAMPLE PROGRAM FOR LABORATORY EXERCISE 5

Set B = Ø
Set A = Ø
Set 5ØØ = Ø
Set 6ØØ = 1Ø
Set 6Ø1 = Ø
Set 1Ø = Ø161ØØ (JSB to 1ØØ)

MAIN PROGRAM
STARTING ADDRESS = 3ØØ

3ØØ = 1Ø21ØØ (STF ØØ)
3Ø1 = 1Ø371Ø (STF, CLF 1Ø)
3Ø2 = Ø465ØØ (ADB 5ØØ)
3Ø3 = Ø46ØØ1 (ADB Ø1(B))
3Ø4 = Ø726ØØ (STA 6ØØ)
3Ø5 = Ø366Ø1 (ISZ 6Ø1)
3Ø6 = Ø263Ø2 (JMP 3Ø2)
3Ø7 = Ø263Ø2 (JMP 3Ø2)

INTERRUPT SUB-ROUTINE
STARTING ADDRESS = 1ØØ

1ØØ = RETURN ADDRESS
1Ø1 = 1Ø251Ø (LIA 1Ø)
1Ø2 = 1Ø371Ø (STC, CLF 1Ø)
1Ø3 = 1261ØØ (JMP, I 1ØØ)

study assignments

IX

STUDY ASSIGNMENTS

Section 1:	Answer questions on pages 1-16, 1-22, and 1-45. Read pages 2-1 through 2-66
Section 2:	Answer questions on pages 2-3, 2-4, 2-23, 2-24, 2-40, 2-21, 2-58, 2-59, 2-64 and 2-66. Read pages 3-1 through 3-26.
Section 3:	Answer questions on pages 3-7, 3-8, and 3-26. Read pages 4-1 through 4-36.
Section 4:	Answer questions on page 4-36. Read pages 5-1 through 5-42.
Section 5:	Answer questions on pages 5-30, 5-35 and 5-38. Read pages 6-1 through 6-43.
Section 6:	Answer questions on pages 6-8, 6-7, 6-19, 6-21, 6-41 and 6-43. Read pages 7-1 through 7-16.

World-Wide Hewlett-Packard Sales & Service Call your HP Computer Specialist at any of these convenient locations:

UNITED STATES

ALABAMA
Huntsville
Tel: (205) 881-4591

ARIZONA
Scottsdale
Tel: (602) 945-7601
Tucson
Tel: (602) 298-2313

CALIFORNIA
North Hollywood
Tel: (213) 877-1282
Palo Alto
Tel: (415) 327-6500
Sacramento
Tel: (916) 482-1463
San Diego
Tel: (714) 223-8103

COLORADO
Englewood
Tel: (303) 771-3455

CONNECTICUT
East Hartford
Tel: (203) 289-9394
Norwalk
Tel: (203) 853-1251

DELAWARE
Wilmington
Tel: (302) 655-6161

FLORIDA
Miami Shores
Tel: (305) 754-4565
Orlando
Tel: (305) 841-3970
St. Petersburg
Tel: (813) 391-0211

GEORGIA
Atlanta
Tel: (404) 436-6181

ILLINOIS
Skokie
Tel: (312) 677-0400

INDIANA
Indianapolis
Tel: (317) 546-4891

LOUISIANA
Kenner
Tel: (504) 721-6201

MARYLAND
Baltimore
Tel: (301) 944-5400
Rockville
Tel: (301) 948-6370

MASSACHUSETTS
Lexington
Tel: (617) 861-8960

MICHIGAN
Southfield
Tel: (313) 353-9100

MINNESOTA
St. Paul
Tel: (612) 645-9461

MISSOURI
Kansas City
Tel: (816) 333-2445
St. Louis
Tel: (314) 962-5000

NEW JERSEY
Paramus
Tel: (201) 265-5000
Cherry Hill
Tel: (609) 667-4000

NEW MEXICO
Albuquerque
Tel: (505) 255-5586
Las Cruces
Tel: (505) 526-2485

NEW YORK
Albany
Tel: (518) 869-8462
Endicott
Tel: (607) 754-0050
Poughkeepsie
Tel: (914) 454-7330
Rochester
Tel: (716) 473-9500
Roslyn, Long Island
Tel: (516) 869-8400
Syracuse
Tel: (315) 454-2486

NORTH CAROLINA
High Point
Tel: (919) 882-6873

OHIO
Cleveland
Tel: (216) 884-9209
Dayton
Tel: (513) 298-0351

OKLAHOMA
Oklahoma City
Tel: (405) 848-2801

OREGON
Portland
Tel: (503) 292-9171

PENNSYLVANIA
Monroeville
Tel: (412) 271-0724
West Conshohocken
Tel: (215) 248-1600

TEXAS
Richardson
Tel: (214) 231-6101
Houston
Tel: (713) 667-2407
San Antonio
Tel: (512) 434-4171

UTAH
Salt Lake City
Tel: (801) 486-8166

VIRGINIA
Richmond
Tel: (703) 282-5451

WASHINGTON
Bellevue
Tel: (206) 454-3971

CANADA

ALBERTA
Edmonton
Tel: (403) 482-5561

BRITISH COLUMBIA
Vancouver
Tel: (604) 731-5301

MANITOBA
St. James
Tel: (204) 786-7581

NOVA SCOTIA
Halifax
Tel: (902) 455-0511

ONTARIO
Ottawa
Tel: (613) 722-4223
Toronto
Tel: (416) 249-9196

QUEBEC
Pointe Claire
Tel: (514) 697-4232

CENTRAL AND SOUTH AMERICA

ARGENTINA
Buenos Aires

BRAZIL
Sao Paulo
Rio de Janeiro

MEXICO
Mexico City

VENEZUELA
Caracas

EUROPE

BELGIUM
Brussels

DENMARK
Naerum

FINLAND
Helsinki

FRANCE
Orsay
Lyon

GERMANY
Berlin W
Böblingen
Düsseldorf
Frankfurt
Hamburg
München

ITALY
Milan
Rome

NETHERLANDS
Amsterdam

NORWAY
Haslum

SWEDEN
Mölndal
Solna

SWITZERLAND
Zurich
Meyrin-Geneva

UNITED KINGDOM
Slough, Bucks

AFRICA, ASIA, AUSTRALIA

AUSTRALIA
Melbourne
Sydney
Adelaide
Perth, W.A.

JAPAN
Osaka
Nagoya
Tokyo

NEW ZEALAND
Wellington

SOUTH AFRICA
Cape Town
Johannesburg

FOR EUROPEAN AREAS NOT LISTED, CONTACT:
Hewlett-Packard S.A., Rue du Bois-du-Lan 7,
1217 Meyrin-Geneva, Tel: (022) 41 54 00

FOR OTHER AREAS NOT LISTED, CONTACT:
Hewlett-Packard Export Marketing, 3200 Hillview Ave.,
Palo Alto, California 94304, U.S.A.; Telex: 034-8461,
Cable: HEWPACK Palo Alto.

HEWLETT hp PACKARD

DIGITAL COMPUTERS

22920

This advertisement appeared in the April, 1969, issue of *Datamation* magazine.

PRINTED IN U.S.A.

HEWLETT PACKARD

11000 WOLFE ROAD, CUPERTINO, CALIFORNIA 95014, TELEPHONE 408 257-7000, TWX 910-338-0221
EUROPE: 1217 MEYRIN-GENEVA, SWITZERLAND • CABLE "HEWPACKSA" TEL. (022) 41.54.00

Printed in U.S.A. 3/69