The TMS320C30 Applications Board Functional Description

APPLICATION REPORT: SPRA403

Tony Coomes
Software Development Systems
Nat Seshan
Digital Signal Processor Products
Semiconductor Group
Texas Instruments

Digital Signal Processing Solutions

TEXAS INSTRUMENTS

IMPORTANT NOTICE

Texas Instruments (TI) reserves the right to make changes to its products or to discontinue any semiconductor product or service without notice, and advises its customers to obtain the latest version of relevant information to verify, before placing orders, that the information being relied on is current.

TI warrants performance of its semiconductor products and related software to the specifications applicable at the time of sale in accordance with TI's standard warranty. Testing and other quality control techniques are utilized to the extent TI deems necessary to support this warranty. Specific testing of all parameters of each device is not necessarily performed, except those mandated by government requirements.

Certain application using semiconductor products may involve potential risks of death, personal injury, or severe property or environmental damage ("Critical Applications").

TI SEMICONDUCTOR PRODUCTS ARE NOT DESIGNED, INTENDED, AUTHORIZED, OR WARRANTED TO BE SUITABLE FOR USE IN LIFE-SUPPORT APPLICATIONS, DEVICES OR SYSTEMS OR OTHER CRITICAL APPLICATIONS.

Inclusion of TI products in such applications is understood to be fully at the risk of the customer. Use of TI products in such applications requires the written approval of an appropriate TI officer. Questions concerning potential risk applications should be directed to TI through a local SC sales office.

In order to minimize risks associated with the customer's applications, adequate design and operating safeguards should be provided by the customer to minimize inherent or procedural hazards.

TI assumes no liability for applications assistance, customer product design, software performance, or infringement of patents or services described herein. Nor does TI warrant or represent that any license, either express or implied, is granted under any patent right, copyright, mask work right, or other intellectual property right of TI covering or relating to any combination, machine, or process in which such semiconductor products or services might be or are used.

TRADEMARKS

CONTACT INFORMATION

US TMS320 HOTLINE	(281) 274-2320
US TMS320 FAX	(281) 274-2324
US TMS320 BBS	(281) 274-2323
US TMS320 email	dsph@ti.com

The TMS320C30 Applications Board Functional Description

Abstract

This book describes the architecture of the TMS320C30 APPB (applications board), part of the TSM320C30 XDS1000 Development System. The APPB was designed to provide a basic platform for software development and a variety of interfaces to the TMS320C30. The four key interfaces used on the APPB are:

- SRAM
- EPROM
- Dual-port SRAM
- DRAM

The book provides basic functional details of the TMS320C30 APPB. Since the SRAM and EPROM interfaces on the APPB are simple, the book's discussion centers on the dual-port SRAM and RAM interfaces and includes the following topics:

- Discussion of the APPB features
- Host/TMS320C30 Interface
- Expansion interface

Supporting figures include:

- Host interface block diagramTMS320C30 bank addressing
- Timing diagrams
- TMS320C30 applications
- TMS320C30 Applications board

Tables included cover:

- Host I/O Memory locations for control registers
- APPB general-purpose control register bits and bit definitions

The book concludes with a series of appendices that contain source code for routines written in C. The contents of these appendices include:

- TMS320C30 applications board routines for both the PC side and the TMS320C30 side
- Memory map and description (TMS320C30 view)
- TMS320C30 software development board
- Various modules
- TMS320C30 software development schematics
- TMS320C30 SWDS DRAM module schematics

Product Support

World Wide Web

Our World Wide Web site at www.ti.com contains the most up to date product information, revisions, and additions. New users must register with TI&ME before they can access the data sheet archive. TI&ME allows users to build custom information pages and receive new product updates automatically via email.

Email

For technical issues or clarification on switching products, please send a detailed email to *dsph@ti.com.* Questions receive prompt attention and are usually answered within one business day.

Introduction

This report describes the architecture of the TMS320C30 Applications Board (APPB), which is part of the TMS320C30 XDS1000 Development System. The XDS1000 is an in-circuit emulation tool for TMS320C30 hardware/software system development. The APPB was designed with two goals: to provide a basic platform for software development and to provide a variety of interfaces to the TMS32C30. There are four key interfaces used on the APPB:

1) SRAM
2) EPROM
3) Dual-port SRAM
4) DRAM

The SRAM and EPROM interfaces on the APPB are quite simple; thus, this report focuses on the dual-port SRAM and the DRAM interfaces. Figure 1 shows a basic block diagram of the APPB.

Figure 1. TMS320C30 Applications Board (APPB) Block Diagram

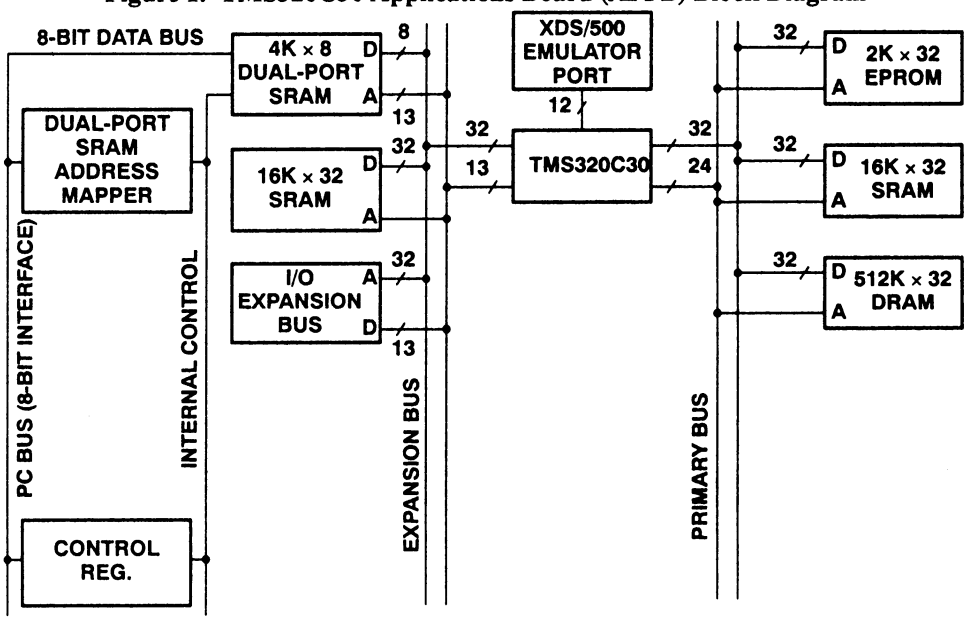

The APPB features include the following:

- TMS320C30/host communications via a designated, relocatable 4K-byte dual-bus SRAM memory block.
- 16K-words (64K-bytes) zero wait-state SRAM on the TMS320C30 primary bus (STRB).
- 2K-words of one wait-state EPROM for interrupt and reset vectors on the TMS320C30 primary bus.
- 16K-words (64K-bytes) zero wait-state SRAM on the TMS320C30 expansion bus (MSTRB). The SRAM can be selected in either one of two 8K-word banks.

- I/O expansion bus.
- 512K-words of DRAM on the TMS320C30 primary bus.
- Emulation port.
- IBM PC, PC/XT, PC/AT support.

The remainder of this document describes each interface in more detail.

Host/TMS320C30 Interface

The host/TMS320C30 interface is composed of two basic blocks, the dual-port SRAM and the control logic. The control logic consists of address decoding, a read/write control register, and a write-only mapping register. The control registers are mapped into the host I/O space as shown in Table 1. Figure 2 is a block diagram of the host interface.

Table 1. Host I/O Memory Locations for Control Registers

Host I/O Memory Locations	Contents
0330 – 0337	Semaphores (LSB is the only valid bit)
0338	Dual-port SRAM mapping register Q
0339	Control register R

Figure 2. Host Interface Block Diagram

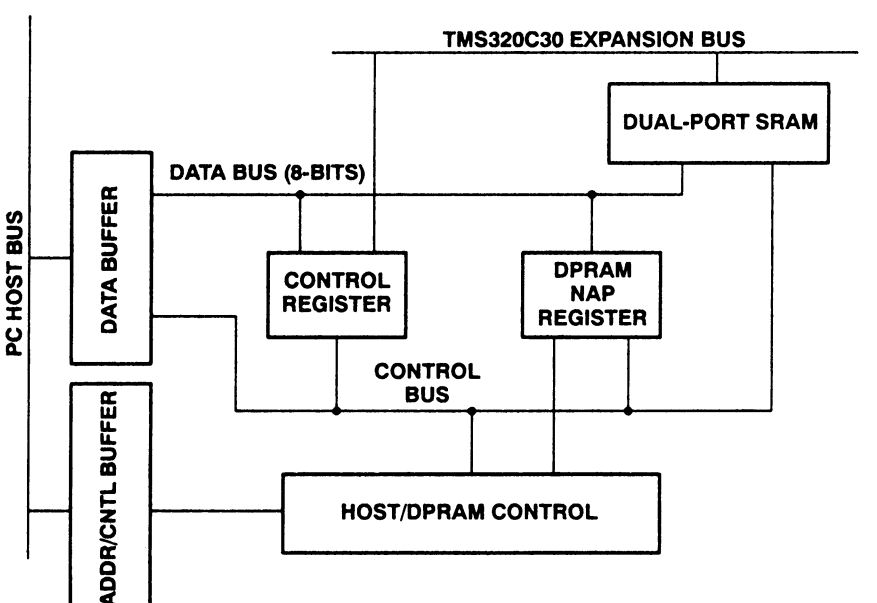

One of the major problems in developing an application for a PC is finding a block of memory that does not conflict with other memory-mapped cards. To ease this problem, the dual port SRAM interface has been designed to be relocatable on 4K-byte boundries throughout the lower 1M-bytes of host memory space. A software example of how to map the dual-port SRAM into this space is given later in this report.

Writing a value to a hardware mapping register on the APPB relocates the dual-port SRAM. When a host memory access is generated, the value in the mapping register is compared to host address bits A12–A19. If they match, a dual-port SRAM access is allowed. To ensure PC and PC/XT compatibility, the dual-port SRAM can be located only in the lower 1M-bytes of host memory.

The APPB contains one general-purpose control register. This register is broken into two four-bit nibbles. The lower nibble can be read from and written to by the host and read by the TMS320C30. The upper nibble can be read from and written to by the TMS320C30 and read by the host. The lower nibble of the control register is cleared by any reset to or from the host PC. The upper nibble of the control register is cleared by any reset to the TMS320C30. The names of the APPB control register bits and host/TMS320C30 access capabilities are given in Table 2. Table 3 gives the control register bit definitions.

Table 2. APPB General-Purpose Control Register Bits

Bit	Name	Host Access	C30 Access
0	CINT	Write/Read	Read only
1	XINTCLR	Write/Read	Read only
2	DPSEL	Write/Read	Read only
3	SWRESET	Write/Read	Read only
4	XINT	Read only	Write/Read
5	CINTCLR	Read only	Write/Read
6	MBANK	Read only	Write/Read
7	MSWAP	Read only	Write/Read

Table 3. APPB General-Purpose Control Register Bit Definitions

Bit	Name	Function
0	CINT	Clears and disables interrupts from the TMS320C30 to the host (XINT). XINTCLR must be set to 1 before the TMS320C30 can generate an interrupt to the host. The host clears and reenables XINT by writing 0, then 1 to XINTCLR. On reset, XINTCLR is read as a 0.
1	XINTCLR	Interrupt (INT0) to the TMS320C30. The host may interrupt the TMS320C30 by setting this bit to 1. The TMS320C30 clears and re-enables the CINT by writing 0, then 1 to CINTCLR. The host cannot generate an interrupt to the TMS320C30 while CINTCLR = 0. On reset, CINT is read as a 0.
2	DPSEL	Dual-port SRAM select. When this bit is set to 1, the dual-port SRAM is memory-mapped in the 4K-byte space of the host PC specified by the 8-bit value in register Q. When DPSEL = 0, the dual-port SRAM will not be mapped in the host PC's address space. On reset, DPSEL is read as a 0.
3	SWRESET	TMS320C30 SWDS soft reset. SWRESET = 0 resets the TMS320C30 SWDS. SWRESET must be set to 1 to take the SWDS out of the reset state. On reset (power on), SWRESET is read as a 0.
4	XINT	Interrupt to the host PC. The TMS320C30 may interrupt the host by setting this bit to 1. The host clears and re-enables XINT by writing 0, then 1 to XINTCLR. The TMS320C30 cannot generate an interrupt to the host while XINTCLR = 0. On reset, XINT is read as a 0.
5	CINTCLR	Clears and disables interrupts from the the host to the TMS320C30 (CINT). CINTCLR must be set to 1 before the host can generate an interrupt to the TMS320C30. The TMS320C30 clears and re-enables CINT by writing 0, then 1 to CINTCLR. On reset, CINTCLR is read as a 0.
6	MBANK	Memory bank select. The 16K-word bank of memory on the TMS320C30 parallel I/O Bus (SRAM space 1) is mapped as two overlapping banks of 8K-words each. MBANK = 0 selects the lower 8K-words, MBANK = 1 selects the upper 8K-words. On reset, MBANK is read as a 0.
7	MSWAP	Memory Swap. The MSWAP bit is used to swap the address map for EPROM and SRAM space 0. MSWAP = 0 maps the EPROM at 000000h–003FFFh and SRAM space 0 at F00000h–F03FFFh. MSWAP = 1 maps the EPROM at F00000h–F03FFFh and SRAM space 0 at 00000h–003FFFh. On reset, MSWAP is read as a 0.

The last portion of the control section contains the dual-port SRAM semaphore registers. Semaphore registers are used to coordinate communications between the host and the TMS320C30. Note that these semaphores do not provide hardware protection of the memory array. Instead, they provide a basic means (via software control) to ensure that data can be accessed from both sides of the dual-port SRAM without being corrupted. A software example that uses the semaphores is presented later in this report.

SRAM and EPROM Interfaces

There are two SRAM interfaces on the APPB: one on the primary bus and one on the expansion bus. Both are implemented with eight 16K-bit × 4, 25-ns SRAMs that provide zero wait-state TMS320C30 operation at 32 MHz. The interfaces are quite simple and consist of a set of address buffers, termination resisters, and a PAL for address decode on the primary bus. Note that the TMS320C30 address lines are routed to various components scattered around the board and then to the primary bus expansion. To prevent line reflections on the SRAM addresses, buffers have been used to isolate the SRAM.

There are two special features on the APPB that apply to the SRAM:

1) You can swap the memory address ranges of the EPROM and the SRAM on the primary bus by setting or clearing the MSWAP bit previously described in Table 3.
2) There are two 8K-word pages of memory on the expansion bus.

By swapping the EPROM and SRAM, you can load in your own interrupt and reset vectors. Otherwise, you would have to remove the EPROMs and reprogram them with your own defined interrupt/reset vectors. The following code segment sets/clears the MSWAP bit.

```
#define EPROM            0              /* select EPROM */
#define SRAM             1              /* select SRAM */

sel_mswap(mem_type)
int mem_type;
{
   char *cntlreg = (char *)0x00805FF7; /* pointer to control reg */

  if (mem_type)     *cntlreg |= 0x80;   /* set MSWAP to 1 select SRAM */
     else           *cntlreg &= 0x7F;   /* set MSWAP to 0 select EPROM */
}
```

There are 16K-words of SRAM on the expansion bus; however, the TMS320C30 can directly access only 8K-words. Instead of wasting the unaddressable 8K-words, you can use a bank addressing bit (MBANK) in the APPB control register to select between the lower and upper 8K-word segments.

The following code segment selects the current bank of memory.

```
#define BANK0            0              /* select lower 8K */
#define BANK1            1              /* select upper8K */

sel_mbank(bank)
int bank;
{
   char *cntlreg = (char *)0x00805FF7; /* pointer to control reg */

    if (bank)       *cntlreg |= 0x40;     /* select bank 1 */
      else          *cntlreg &= 0xBF;     /* select bank 0 */
}
```

The APPB supports 2K-words of one wait-state EPROM on the primary bus for a boot loader and operating system support. As stated earlier, this EPROM is remappable.

DRAM Interface

The APPB provides a DRAM expansion module that is connected to the TMS320C30 primary bus. Historically, DRAM interfaces to DSP devices have not been popular because of interface

difficulty and limited processor address space. The TMS320C30 supplies solutions to both of those issues with its memory interface and 16M-words address space. Two areas of the TMS320C30 memory interface are most useful for DRAM design:

- Use of bank mode
- The ability to do continous reads while in a bank without deasserting the $\overline{STRB}$ signal

When you use these two features, it is quite simple to design a medium-speed interface to page-mode DRAMs.

The TMS320C30 DRAM module consists of four banks of memory, each bank 256K × 32 bits, that provide 1M-word (4M-bytes) of medium speed storage for the TMS320C30 (see Figure 3). The bank-switch function on the TMS320C30 provides fast page-mode access on back-to-back read cycles within a DRAM page. All address and control lines to the memory array are buffered and series-terminated for good signal quality. The memory array uses CAS-before-RAS refresh to reduce component count. There is no onboard refresh timer; instead, SDACK0 from the host PC provides a refresh request every 12–16 μs. The DRAM access/cycle times are summarized in Table 4.

Figure 3. TMS320C30 Bank Addressing

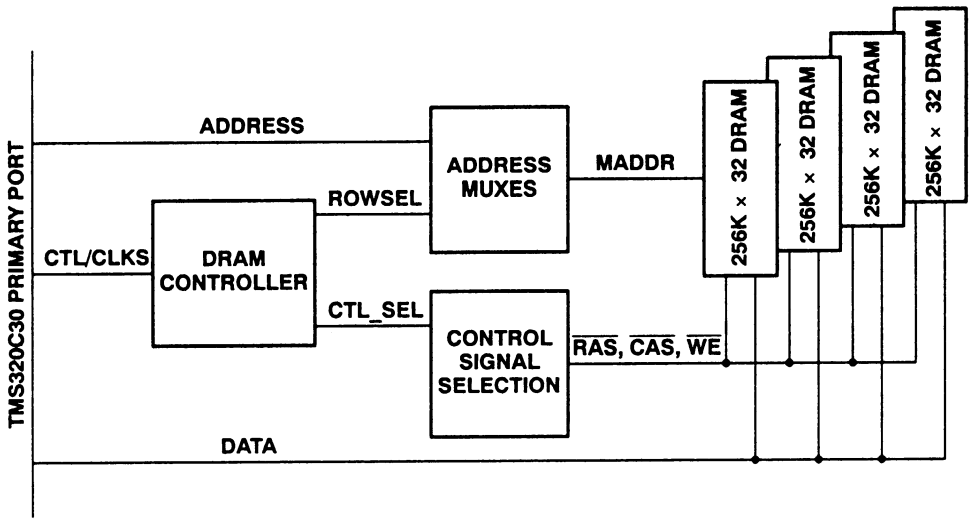

In Table 4, these definitions are assumed:

Access Time – Number of clocks from $\overline{STRB}$ active to data clocked into the TMS320C30.

Cycle time – Number of clocks between two back-to-back cycles (includes DRAM $\overline{RAS}$ precharge on non-page-mode cycles).

Table 4. TMS320C30 DRAM Access and Cycle Times

Mode	Access Time (clks)	Cycle Time (clks)
Read	3	5
Read (page mode)	3/2†	2
Write	3	4

† First page-mode access takes 3 clocks; the following accesses take 2 clocks each.

The four banks of DRAM are mapped into the TMS320C30 memory space at the address locations shown in Table 5.

Table 5. DRAM Bank Memory Locations in the TMS320C30 Memory Space

DRAM Memory Bank No.	TMS320C30 Memory Location
0 ($\overline{RAS0}$,$\overline{CAS0}$)	400000H–43FFFFH
1 ($\overline{RAS1}$,$\overline{CAS1}$)	440000H–47FFFFH
2 ($\overline{RAS2}$,$\overline{CAS2}$)	480000H–4BFFFFH
3 ($\overline{RAS3}$,$\overline{CAS3}$)	4C0000H–4FFFFFH

Memory decode for the DRAM module is performed in two steps:

1) The APPB main card provides a memory select to decode the board range of 400000H–4FFFFFh.
2) Bank decode is then provided on the DRAM module through TMS320C30 address bits A18 and A19.

The DRAM controller consists of a pair of registered PALs, several SSI gates, and a delay line (used to time DRAM row/column address multiplexing). DRAM timing is generated from PAL UE5 (see schematics in Appendix C), while address decoding and special refresh control are provided by PAL UD5. Both PALs are clocked off of a delayed H1 clock. The DRAM controller looks for every opportunity to generate page-mode cycles to the DRAM. The TMS320C30 leaves $\overline{STRB}$ low for back-to-back reads; the DRAM controller looks for this condition and cycles CAS while holding RAS low (i.e., DRAM page-mode access). When $\overline{STRB}$ goes high, the DRAM controller will take both RAS and CAS high to prepare for a new access. For proper operation, the TMS320C30 primary bus control register (refer to the Primary Bus Control Register subsection in the *Third-Generation TMS320 User's Guide*) must be set to operate off of the external ready signal and use a maximum bank size of 512 words (refer to the the Programmable Bank Switching subsection of the *Third-Generation TMS320 User's Guide*).

Figures 4 through 6 show the timing for the various DRAM cycles.

Figure 4. Page-Mode Read-Cycle Timing Diagram

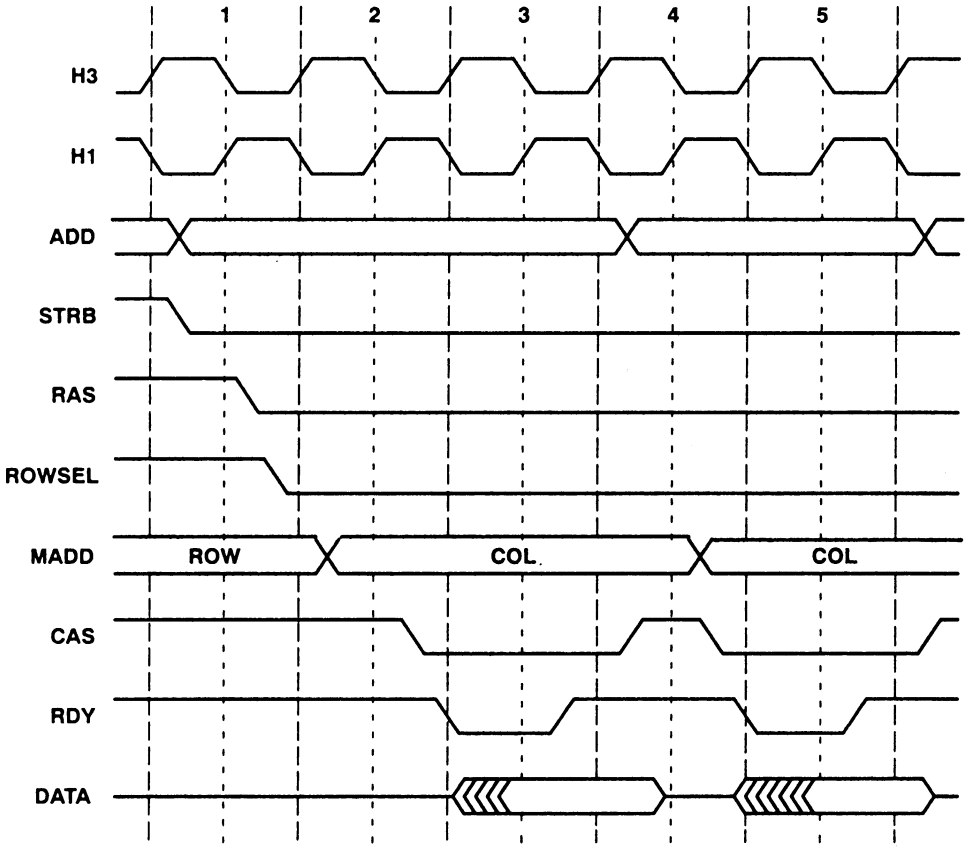

Figure 5. Single Write-Cycle Timing Diagram

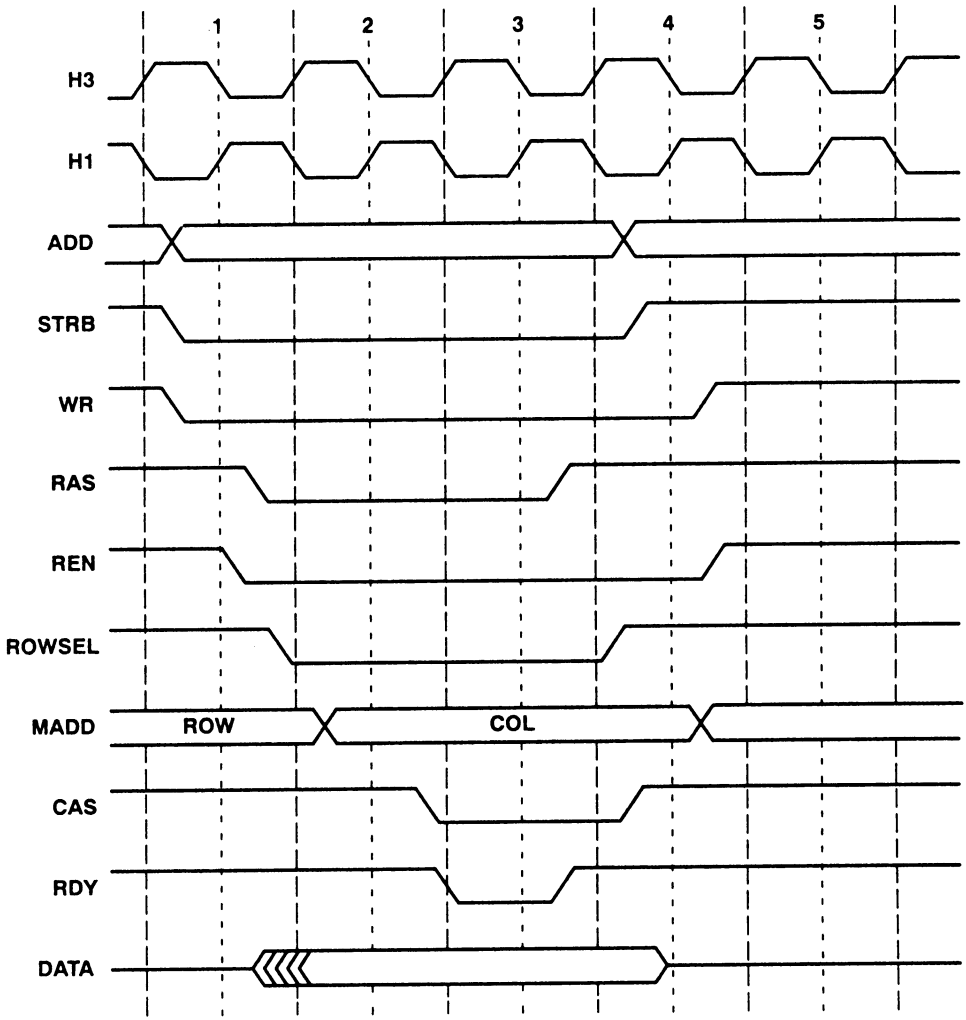

Figure 6. Single Read-Cycle Timing Diagram

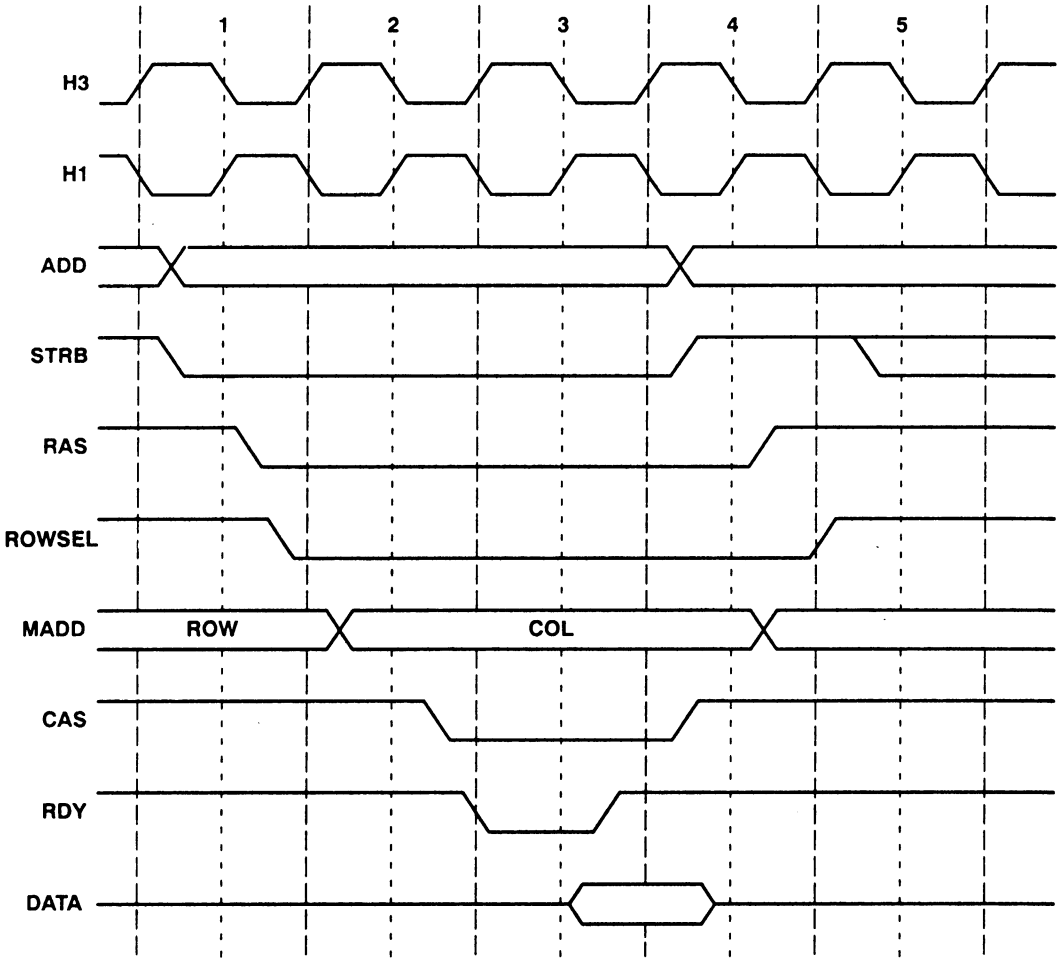

Expansion Interface

The APPB's two expansion connectors contain the signals from the TMS320C30 expansion port, serial ports, flag pins, etc. Each 50-pin connector (P3 and P4 of Figure 7) is composed of a dual row of 25 pins located on 0.1-inch centers. These expansion connectors provide easy connection to other hardware via standard 50-wire flat ribbon cable. Figure 6 shows the orientation of the connectors. See schematic sheet 7 of Appendix C for pinout details.

Figure 7. TMS320C30 Applications Board

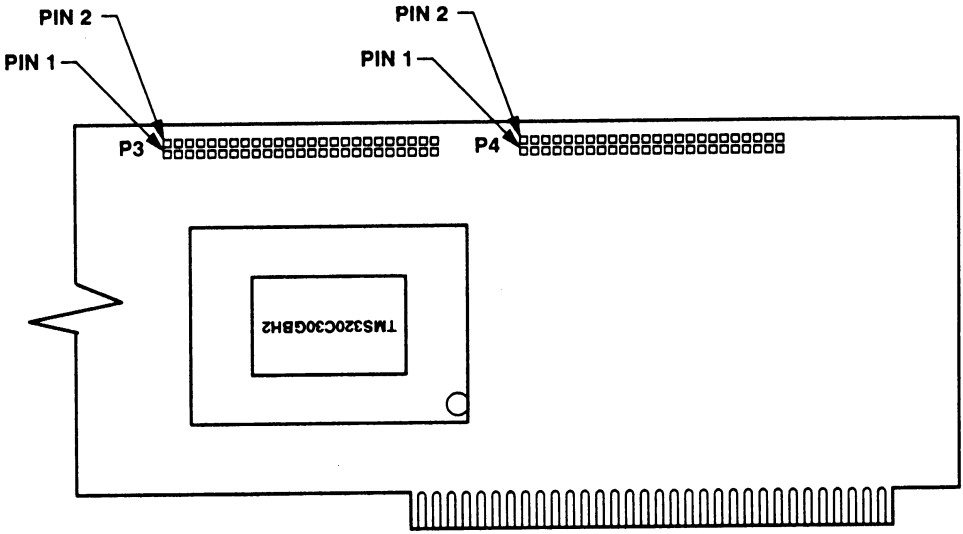

Dual-Port SRAM Interface

All communications between the TMS320C30 and the host occur through the dual-port SRAM, which is 4K-bytes deep, with 8 dedicated semaphore registers. On the host side, the dual-port memory array is memory-mapped, while the semaphores are I/O-mapped. On the TMS320C30 side, the dual-port SRAM is located on the expansion bus with the memory array mapped from 0x00804000–0x00804FFF and the semaphores mapped from 0x00805FF8–0x00805FFF. The host can directly access the dual-port SRAM without having to compensate for byte-wide access limitations. However, as the TMS320C30 can do only 32-bit accesses, the upper 24 bits of a data word are undefined. The TMS320C30 must therefore format data written to and read from the dual-port SRAM. A software example is given later in this report.

While dual-port SRAMs provide an excellent means for multiprocessor communications, a certain amount of software overhead is required to coordinate data flow. As might be expected, there are numerous methods for coordinating data flow. This application report presents a set of primitives that have been developed to form a basic communications protocol. The primitives are written entirely in C and have been tested on the XDS1000 with the simple test routine provided. Remember that there are numerous ways to do a communications protocol. The method shown in this report is not the best for all applications; it is simply a method that makes good use of the capability of the dual-port SRAM.

The following are basic ideas of the communications protocol developed for this applications report.

1) The dual-port memory is broken into eight equal segments. The first segment is used only for control structures and command passing. The remaining seven segments are used entirely for data passing. Segment size is set to 512 bytes. The number and size of segments can be changed at compile time if desired.

2) Each of the seven data segments is totally independent from any other data segment. However, only one processor can own a particular segment at any given time. The TMS320C30 and host can simultanously access the dual-port SRAM as long as both are not trying to access the same segment.
3) The host is the master; the TMS320C30 is the slave. The TMS320C20 polls the dual-port control segment to determine if the host has deposited a command. If a command is present, the TMS320C30 executes the command and then returns to polling.
4) Only the first semaphore register is used in the dual-port. Each processor uses this semaphore to gain access to the control segment. Access to the seven data memory segments are coordinated via the control structures, not the semaphores.
5) There are seven control structures in the control segment, one for each data segment. Each control structure consists of 22 bytes and are defined as follows:

Byte	Name	Definition
0	pflag	Buffer present (i.e., being used)
1	command	Command to execute
2	buf_stat	Status of the data buffer
3	nc	Reserved
4–7	count	Number of 32–bit words to transfer
8–11	addr	TMS320C30 to read/write data
12–21	message	Ten bytes reserved for message passing

Appendix A contains routines for the communication primitives used by the host and the TMS320C30. Appendix A1 contains routines for the PC side, Appendix A2 routines for the TMS320C30 side. Note that the routines on both sides have the same names and perform essentially the same function. Appendix A3 contains a memory map and description (TMS320C30 view). After the code has been compiled, use the following sequence to execute the test program:

1) Reset the XDS/1000:

```
 xreset   [RETURN]
c30reset  [RETURN]
```

2) Get into the emulator and load the TMS320C30 dual-port code.

```
emu30          [RETURN]       ; load emulator
xr                            ; reset the c30
lo             'file name'    ; load the object file
xd                            ; execute disconnect
[esc]                         ; escape to main menu
q 'yes'                       ; quit emulator
```

At this point, your dual bus code should be executing and waiting for a host input.

3) Execute host dual-port code.

```
'file name'
```

The host code will then print the numbers 0 through 25 to the screen.

Conclusion

This report has provided basic functional details of the TMS320C30 APPB. Because of their complexity, the DRAM and dual-port SRAM interfaces have been discussed. The features of the TMS320C30 allow it to encompass a wide range of interfaces. The TMS320C30 bank-switch mode and continuous strobe signal on back-to-back read cycles overcome traditional DSP/DRAM problems of interface difficulty and limited processor address space. A set of communications primitives routines to use with dual-port SRAM have been provided in Appendix A. These routines are written in C for ease of understanding and modification to meet individual needs.

Appendix A

TMS320C30 Application Board Routines, Memory Map and Description

Appendix A1. TMS320C30 Applications Board Routines–PC Side

```
/*********************************************************************/
/*                                                                   */
/*  APPENDIX A1                                                      */
/*                                                                   */
/*  TMS320C30 APPLICATION BOARD ROUTINES - PC SIDE                   */
/*                                                                   */
/*  Texas Instruments Inc.                                           */
/*  10/25/89                                                         */
/*                                                                   */
/*  Functions:                                                       */
/*                                                                   */
/*      int APPB_reset()        Reset APPB                           */
/*      int APPB_dpinit()       Intialize APPB.                      */
/*      int APPB_getsem()       Get access to semaphore bit N        */
/*      int APPB_relsem()       Release access to semaphore bit N    */
/*      int APPB_getctlblk()    Get a control block in DPRAM         */
/*      int APPB_relctlblk()    Release control block in DPRAM       */
/*      int APPB_getmemblk()    Get a block of memory from DPRAM     */
/*      int APPB_putmemblk()    Put a block of memory to DPRAM       */
/*                                                                   */
/*  All code was compiled with Microsoft C compiler version 5.1 using the  */
/*  large model. If small model is used, then pointers used to access the  */
/*  dual port SRAM would have to be declared and used as 'far' pointers    */
/*  (i.e. 32-bit pointer). Under the large model, all pointers are          */
/*  defaulted to 32 bits.                                            */
/*                                                                   */
/*********************************************************************/

#include <stdio.h>

/*********************************************************************/
/*                                                                   */
/*  Constant definitions for the TMS320C30 Applications Board.       */
/*                                                                   */
/*********************************************************************/

#define     outport     outp
#define     inport      inp
#define     SEM_BASE    0x0330
#define     MAP_REG     0x0338
#define     CTL_REG     0x0339

#define     CINT        0x01
#define     XINTCLR_    0x02
#define     DPSEL       0x04
#define     SWRESET_    0x08
#define     XINT        0x10
#define     CINTCLR_    0x20
#define     MBANK       0x40
#define     MSWAP       0x80

#define     DPRAM_CTL   0xC9000000
#define     DPRAM_SEG   0xC9
#define     DPRAM_MEMBASE  0xC9000200
#define     DPRAM_SIZE     0x1000
#define     DPRAM_BLKS     7
#define     DPRAM_BLK_SIZE 512
#define     NUM_SEMS       8
#define     MAX_SEM_TIME   10000

#define     BUF_EMPTY      0
#define     BUF_FULL       1

#define     NOP            0x00
#define     HOST_MEM_WR    0x80
#define     HOST_MEM_RD    0x81

typedef     unsigned char  UCHAR;
typedef     unsigned short UINT;
typedef     unsigned long  ULONG;

typedef     struct
            {
                UCHAR   pflag;
                UCHAR   command;
                UCHAR   buf_stat;
                UCHAR   nc;
                ULONG   count;
                ULONG   addr;
                UCHAR   message[10];
            }DPCNTL;
```

```
/*********************************************************************/
/*                                                                   */
/*   Test program.                                                   */
/*                                                                   */
/*   Sequence:                                                       */
/*                                                                   */
/*   1)  Write a block of memory to the dual port.                   */
/*   2)  Read back the block of data from the dual port.             */
/*                                                                   */
/*********************************************************************/

main()
{
   UINT  semnum[DPRAM_BLKS];
   int i;
   ULONG   memarray[25],mem2array[25];

   APPB_dpint();


   for(i=0;i<25;i++) {memarray[i] = (ULONG)i; mem2array[i] = 0UL;}

   if(APPB_putmemblk(25UL,memarray,0x00809900))
       printf("failed memory write\n");

   if(APPB_getmemblk(25UL,0x00809900,mem2array))
       printf("failed memory read\n");

   for(i=0;i<25;i++)  printf("value read %d\n",mem2array[i]);

   exit(0);
}
```

```
/*********************************************************************/
/*                                                                   */
/*   APPB_reset(),PC side                                            */
/*                                                                   */
/*   Reset APPB.                                                     */
/*                                                                   */
/*   Sequence:                                                       */
/*                                                                   */
/*   1)  Clear control register.                                     */
/*   2)  Set SWRESET_ to 1.                                          */
/*                                                                   */
/*********************************************************************/
int APPB_reset()
    {
       outport(CTL_REG,0);
       outport(CTL_REG,SWRESET_);
       return(0);
    }

/*********************************************************************/
/*                                                                   */
/*   APPB_dpint(), PC side                                           */
/*                                                                   */
/*   Sequence:                                                       */
/*                                                                   */
/*   1)  Set DPRAM semaphores to 1 (free).                           */
/*   2)  Set DPRAM mapping register.                                 */
/*   3)  Set DPRAM global enable bit to 1.                           */
/*                                                                   */
/*********************************************************************/
int APPB_dpint()
    {
       int i;
       UINT  semaddr = SEM_BASE;
       UCHAR *dpram  = (UCHAR *)DPRAM_CTL;

       for(i=0;i<8;i++)    outport(semaddr++,1);
       outport(MAP_REG,DPRAM_SEG);
       outport(CTL_REG,DPSEL | SWRESET_);
       return(0);
    }
```

```
/*****************************************************************/
/*                                                               */
/*   APPB_getsem(), PC side                                      */
/*                                                               */
/*   Attempts to gain access of semaphore 'semnum'.              */
/*   Return a 0 if successful, a -1 if failed.                   */
/*                                                               */
/*   Sequence                                                    */
/*                                                               */
/*   1)  Write 0 to semaphore.                                   */
/*   2)  Decrement timoute, check for timeout = 0, or semaphore = 0.  */
/*   3)  Return pass/fail.                                       */
/*                                                               */
/*****************************************************************/

int APPB_getsem(semnum)
      UINT  semnum;
    {
      UINT  semaddr = SEM_BASE + semnum;
      UINT  timeout = MAX_SEM_TIME;

      outport(semaddr,0);
      while( --timeout && (inport(semaddr) & 1));

      if(timeout) return(0);
      else return(-1);
    }
```

```
/*****************************************************************/
/*                                                               */
/*   APPB_relsem(), PC side                                      */
/*                                                               */
/*   Release semaphore at 'semnum'.                              */
/*   Return a 0 if successful, a -1 if failed.                   */
/*                                                               */
/*   Sequence                                                    */
/*                                                               */
/*  1)  Write 1 to semaphore.                                    */
/*  2)  Decrement timeout, check for timeout = 0, or semaphore = 1.  */
/*  3)  Return pass/fail.                                        */
/*                                                               */
/*****************************************************************/

int APPB_relsem(semnum)
      UINT  semnum;
    {
      UINT  semaddr = SEM_BASE + semnum;
      UINT  timeout = MAX_SEM_TIME;

      outport(semaddr,1);
      while( --timeout && !(inport(semaddr) & 1));

      if(timeout) return(0);
      else return(-1);
    }
```

```
/*****************************************************************************/
/*                                                                           */
/*   APPB_getctlblk(), PC side                                               */
/*                                                                           */
/*   Find unused block of memory in the dual port.                           */
/*   Return a 0 if successful, a -1 if failed.                               */
/*                                                                           */
/*   Sequence                                                                */
/*                                                                           */
/*   1)  Search control structures for free block of memory.                 */
/*   2)  If block free, set semnum to block index, return 0.                 */
/*   3)  Else, return -1 (failed to find block).                             */
/*                                                                           */
/*****************************************************************************/

int APPB_getctlblk(semnum)
      UINT  *semnum;
    {
      int i;
      DPCNTL *dpctl = (DPCNTL *)DPRAM_CTL;

      if(APPB_getsem(0))  return(-1);

      for(i=0;i<DPRAM_BLKS;i++)
          if(!dpctl[i].pflag)
          {
            dpctl[i].pflag   = 1;
            dpctl[i].command = NOP;
            dpctl[i].buf_stat = BUF_EMPTY;
            *semnum = i;
            if(APPB_relsem(0)) return(-1);
            else return(0);
          }

      APPB_relsem(0); return(-1);
    }
```

```
/*****************************************************************************/
/*                                                                           */
/*   APPB_relctlblk(), PC side                                               */
/*                                                                           */
/*   Release block of memory in the dual port.                               */
/*   Return a 0 if successful, a -1 if failed.                               */
/*                                                                           */
/*   Sequence                                                                */
/*                                                                           */
/*   1)  Null out the control structure.                                     */
/*   2)  Return.                                                             */
/*                                                                           */
/*****************************************************************************/
int APPB_relctlblk(semnum)
      UINT  semnum;
    {
      int i;
      DPCNTL *dpctl = (DPCNTL *)DPRAM_CTL;

      if(APPB_getsem(0))  return(-1);
      dpctl[semnum].pflag    = 0;
      dpctl[semnum].command  = NOP;
      dpctl[semnum].buf_stat = BUF_EMPTY;
      if(APPB_relsem(0)) return(-1);
      else return(0);
    }
```

```
/*********************************************************************/
/*                                                                   */
/*   APPB_putmemblk(), PC side                                       */
/*                                                                   */
/*   Write block of memory to the dual port.                         */
/*   Return a 0 if successful, a -1 if failed.                       */
/*                                                                   */
/*   Sequence                                                        */
/*                                                                   */
/*   1)  Find free block of dual port to write memory.               */
/*   2)  Write the memory.                                           */
/*   3)  Write memory parameters to control block.                   */
/*                                                                   */
/*********************************************************************/

int APPB_putmemblk(cnt,src,dst)
      ULONG cnt;
      ULONG *src;
      ULONG dst;
    {

      DPCNTL *dpctl = (DPCNTL *)DPRAM_CTL;
      ULONG  *dpram;
      UINT    dpblk;
      int     i;

      if(APPB_getctlblk(&dpblk))  return(-1);

      dpram = (ULONG*)(DPRAM_MEMBASE + (dpblk * DPRAM_BLK_SIZE));

      for(i=0;i<cnt;i++)
      *dpram++ = *src++;

      if(APPB_getsem(0))  return(-1);

      dpctl[dpblk].command  = HOST_MEM_WR;
      dpctl[dpblk].buf_stat = BUF_FULL;
      dpctl[dpblk].count    = cnt;
      dpctl[dpblk].addr     = dst;

      if(APPB_relsem(0))  return(-1);
   }
```

```
/*********************************************************************/
/*                                                                   */
/*   APPB_getmemblk(), PC side                                       */
/*                                                                   */
/*   Read block of memory to the dual port.                          */
/*   Return a 0 if successful, a -1 if failed.                       */
/*                                                                   */
/*   Sequence                                                        */
/*                                                                   */
/*   1)  Find free block of dual port for memory.                    */
/*   2)  Write memory parameters to control block.                   */
/*   3)  Wait for TMS320C30 to put requested memory into the dual port. */
/*   4)  Read data from the dual port.                               */
/*   5)  Release block of dual port memory.                          */
/*                                                                   */
/*********************************************************************/
int APPB_getmemblk(cnt,src,dst)
      ULONG cnt;
      ULONG src;
      ULONG *dst;
    {

      DPCNTL *dpctl = (DPCNTL *)DPRAM_CTL;
      ULONG  *dpram;
      UINT    dpblk;
      int     i;
      UINT  timeout = MAX_SEM_TIME;

      if(APPB_getctlblk(&dpblk))  return(-1);

      dpram = (ULONG*)(DPRAM_MEMBASE + (dpblk * DPRAM_BLK_SIZE));

      if(APPB_getsem(0)) return(-1);

      dpctl[dpblk].command  = HOST_MEM_RD;
      dpctl[dpblk].buf_stat = BUF_EMPTY;
      dpctl[dpblk].count    = cnt;
      dpctl[dpblk].addr     = src;

      while( --timeout )
      {
          if(!APPB_getsem(0) && (dpctl[dpblk].buf_stat == BUF_FULL)) break;
          if(APPB_relsem(0))  return(-1);
      }

      if(APPB_relsem(0) || !timeout) return(-1);

      for(i=0;i<cnt;i++)
          *dst++ = *dpram++;

      if(APPB_relctlblk(dpblk)) return(-1);

   }
```

Appendix A2. TMS320C30 Applications Board Routines—TMS320C30 Side

```
/*****************************************************************/
/*                                                               */
/*  APPENDIX A2                                                  */
/*                                                               */
/*  TMS320C30 APPLICATION BOARD ROUTINES - TMS320C30 SIDE        */
/*                                                               */
/*  Texas Instruments Inc.                                       */
/*  10/20/89                                                     */
/*                                                               */
/*  Functions:                                                   */
/*                                                               */
/*      int APPB_dpinit()       Intialize APPB.                  */
/*      int APPB_getsem()       Get access to semaphore bit N    */
/*      int APPB_relsem()       Release access to semaphore bit N */
/*      int APPB_getctlblk()    Get a control block in DPRAM     */
/*      int APPB_relctlblk()    Release control block in DPRAM   */
/*      int APPB_getmemblk()    Get a block of memory from DPRAM */
/*      int APPB_putmemblk()    Put a block of memory to DPRAM   */
/*      int APPB_getlong()      Read a long int from the DPRAM   */
/*      int APPB_getcommand()   Read a command and parameters from DPRAM */
/*                                                               */
/*  All code was compiled with TMS320C30 C compiler version 2.1, using the */
/*  small model.                                                 */
/*                                                               */
/*****************************************************************/

/*****************************************************************/
/*                                                               */
/*    Constant definitions for the TMS320C30 Applications Board. */
/*                                                               */
/*****************************************************************/
#define         SEM_BASE        0x00805FF8
#define         CTL_REG         0x00805FF7

#define         CINT            0x01
#define         XINTCLR_        0x02
#define         DPSEL           0x04
#define         SWRESET_        0x08
#define         XINT            0x10
#define         CINTCLR_        0x20
#define         MBANK           0x40
#define         MSWAP           0x80

#define         DPRAM_CTL       0x00804000
#define         DPRAM_MEMBASE   0x00804200
#define         DPRAM_SIZE      0x1000
#define         DPRAM_BLKS      7
#define         DPRAM_BLK_SIZE  512
#define         NUM_SEMS        8
#define         MAX_SEM_TIME    10000

#define         BUF_EMPTY       0
#define         BUF_FULL        1

#define         NOP             0x00
#define         HOST_MEM_WR     0x80
#define         HOST_MEM_RD     0x81

typedef         unsigned char   UCHAR;
typedef         unsigned short  UINT;
typedef         unsigned long   ULONG;

typedef         struct
                {
                    UCHAR   pflag;
                    UCHAR   command;
                    UCHAR   buf_stat;
                    UCHAR   nc;
                    UCHAR   count[4];
                    UCHAR   addr[4];
                    UCHAR   message[10];
                }DPCNTL;

typedef         struct
                {
                    UCHAR   mblk;
                    UCHAR   mcmd;
                    ULONG   mcnt;
                    ULONG   maddr;
                }MPARMS;
```

```
/*****************************************************************/
/*                                                               */
/*   Test program, TMS320C30 side.                               */
/*                                                               */
/*   Sequence:                                                   */
/*                                                               */
/*   1)  Initialize the the dual port SRAM.                      */
/*   2)  Poll dual port for commands.                            */
/*   3)  Execute commands as encountered.                        */
/*                                                               */
/*****************************************************************/
main()
{
       int i;
       MPARMS  mparms;

       APPB_dpint();

       for(;;)
       {

           APPB_getcommand(&mparms);
           switch(mparms.mcmd)
           {
               case NOP:   break;

               case HOST_MEM_WR:
                   APPB_getmemblk(mparms.mcnt,mparms.maddr,mparms.mblk);
               break;

               case HOST_MEM_RD:
                   APPB_putmemblk(mparms.mcnt,mparms.maddr,mparms.mblk);
               break;

               default:    break;

           }
       }
 }
```

```
/*****************************************************************/
/*                                                               */
/*   APPB_dpint(), TMS320C30 side.                               */
/*                                                               */
/*   Sequence:                                                   */
/*                                                               */
/*   1)  Set DRAM semaphores to 1 (free).                        */
/*   2)  Clear entire dual port RAM.                             */
/*                                                               */
/*****************************************************************/
int APPB_dpint()
    {
       int i;
       UCHAR *semaddr = (UCHAR *)SEM_BASE;
       UCHAR *dpram   = (UCHAR *)DPRAM_CTL;

       for(i=0;i<8;i++)    *semaddr++ = 1;
       for(i=0;i<DPRAM_SIZE;i++) *dpram++ = 0;

       return(0);
    }
```

```
/*****************************************************************/
/*                                                               */
/*   APPB_getsem(), TMS320C30 side                               */
/*                                                               */
/*   Attempts to gain access of semaphore 'semnum'               */
/*                                                               */
/*   Sequence                                                    */
/*                                                               */
/*   1)  Write 0 to semaphore.                                   */
/*   2)  Wait till read a 0.                                     */
/*****************************************************************/

int APPB_getsem(semnum)
      UINT  semnum;
   {
      UCHAR *semaddr = (UCHAR *)(SEM_BASE + semnum);

      *semaddr = 0; while(*semaddr & 1UL); return(0);
   }
```

```
/*****************************************************************/
/*                                                               */
/*   APPB_relsem(), TMS320C30 side                               */
/*                                                               */
/*   Release semaphore at 'semnum'                               */
/*                                                               */
/*   Sequence                                                    */
/*                                                               */
/*   1)  Write 1 to semaphore.                                   */
/*   2)  Wait till read 1.                                       */
/*****************************************************************/

int APPB_relsem(semnum)
      UINT  semnum;
   {
      UCHAR *semaddr = (UCHAR *)(SEM_BASE + semnum);

      *semaddr = 1; while(!(*semaddr & 1UL)); return(0);
   }
```

```
/*********************************************************************/
/*                                                                   */
/*   APPB_getctlblk(), TMS320C30 side.                               */
/*                                                                   */
/*   Find unused block of memory in the dual port.                   */
/*   Return a 0 if successful, a -1 if failed.                       */
/*                                                                   */
/*   Sequence                                                        */
/*                                                                   */
/*   1)  Search control structures for free block of memory.         */
/*   2)  If block free, set semnum to block index, return 0.         */
/*   3)  Else,  return -1 (failed to find block).                     */
/*                                                                   */
/*********************************************************************/
int APPB_getctlblk(semnum)
      UINT  *semnum;
    {
      int i;
      DPCNTL *dpctl = (DPCNTL *)DPRAM_CTL;

      APPB_getsem(0);

      for(i=0;i<DPRAM_BLKS;i++)
          if(!(dpctl[i].pflag & 1UL))
          {
            dpctl[i].pflag    = 1;
            dpctl[i].command  = NOP;
            dpctl[i].buf_stat = BUF_EMPTY;
            *semnum = i;
            APPB_relsem(0);   return(0);
          }

      APPB_relsem(0); return(-1);
    }
```

```
/*********************************************************************/
/*                                                                   */
/*   APPB_relctlblk(), TMS320C30 side.                               */
/*                                                                   */
/*   Release block of memory in the dual port.                       */
/*   Return a 0 if successful, a -1 if failed.                       */
/*                                                                   */
/*   Sequence                                                        */
/*                                                                   */
/*   1)  Null out the control structure.                             */
/*   2)  Return.                                                     */
/*                                                                   */
/*********************************************************************/
int APPB_relctlblk(semnum)
      UINT  semnum;
    {
      int i;
      DPCNTL *dpctl = (DPCNTL *)DPRAM_CTL;

      APPB_getsem(0);
      dpctl[semnum].pflag    = 0;
      dpctl[semnum].command  = NOP;
      dpctl[semnum].buf_stat = BUF_EMPTY;
      APPB_relsem(0);  return(0);
    }
```

```
/*****************************************************************/
/*                                                               */
/*   APPB_putmemblk(), TMS320C30 side.                           */
/*                                                               */
/*   Move block of data to dual port.                            */
/*                                                               */
/*   Sequence                                                    */
/*                                                               */
/*   1)  Move data to the dual port.                             */
/*   2)  Set dual port buffer status to BUF_FULL.                */
/*                                                               */
/*****************************************************************/
int APPB_putmemblk(cnt,src,dpblk)
      ULONG cnt;
      ULONG *src;
      UINT  dpblk;
   {

      DPCNTL *dpctl = (DPCNTL *)DPRAM_CTL;
      UCHAR  *dpram;
      ULONG   temp;
      int     i,j;

      dpram = (UCHAR *)(DPRAM_MEMBASE + (dpblk * DPRAM_BLK_SIZE));

      for(i=0;i<cnt;i++)
      { temp = *src++; for(j=0;j<32;j+=8) *dpram++ = temp >> j; }

      APPB_getsem(0);
      dpctl[dpblk].buf_stat = BUF_FULL;
      APPB_relsem(0); return(0);
  }
```

```
/*****************************************************************/
/*                                                               */
/*   APPB_getmemblk(), TMS320C30 side.                           */
/*                                                               */
/*   Move block of data from dual port.                          */
/*                                                               */
/*   Sequence                                                    */
/*                                                               */
/*   1)  Move data from the dual port.                           */
/*   2)  Release block of dual port memory.                      */
/*                                                               */
/*****************************************************************/
int APPB_getmemblk(cnt,dst,dpblk)
      ULONG cnt;
      ULONG *dst;
      UINT  dpblk;
   {

      DPCNTL *dpctl = (DPCNTL *)DPRAM_CTL;
      UCHAR  *dpram;
      ULONG   temp;
      int     i,j;

      dpram = (UCHAR *)(DPRAM_MEMBASE + (dpblk * DPRAM_BLK_SIZE));

      for(i=0;i<cnt;i++)
      {
          temp = 0UL;
          for(j=0;j<32;j+=8) temp |= ((*dpram++) &0x000000ff) << j;
          *dst++ = temp;
      }

      APPB_relctlblk(dpblk);  return(0);
  }
```

```
/*****************************************************************/
/*                                                               */
/*   APPB_getlong(), TMS320C30 side.                             */
/*                                                               */
/*   Get a long word of data from the dual port.                 */
/*****************************************************************/
int APPB_getlong(src,dst)
        ULONG *src;
        ULONG *dst;
    {
        int j;
        *dst = 0UL;
        for(j=0;j<32;j+=8) *dst |= ((*src++) & 0x000000ff) << j;
        return(0);
    }
```

```
/*****************************************************************/
/*                                                               */
/*   APPB_getcommand(), TMS320C30 side.                          */
/*                                                               */
/*   Search the dual port control structures for commands.       */
/*                                                               */
/*   Sequence                                                    */
/*                                                               */
/*   1)  Get access to dual port semaphore 0.                    */
/*   2)  If at end of control structures, reset current_blk.     */
/*   3)  Search control structures for a command.                */
/*   4)  If found, format parameters, return.                    */
/*   5)  Else, search to the end of list, return.                */
/*                                                               */
/*****************************************************************/
int APPB_getcommand(mparms)
        MPARMS  *mparms;
    {
        DPCNTL *dpctl = (DPCNTL *)DPRAM_CTL;
        static int  current_blk = -1;

        APPB_getsem(0);

        if(current_blk >= DPRAM_BLKS) current_blk = -1;

        while(current_blk++ < DPRAM_BLKS)
        {
            if(dpctl[current_blk].pflag & 1UL)
            {
                mparms->mcmd = dpctl[current_blk].command & 0x000000ff;
                mparms->mblk = current_blk;
                APPB_getlong(&dpctl[current_blk].count,&mparms->mcnt);
                APPB_getlong(&dpctl[current_blk].addr,&mparms->maddr);
                APPB_relsem(0); return(0);
            }
        }

        APPB_relsem(0); mparms->mcmd = NOP; return(0);
    }
```

APPENDIX A3. Memory Map and Description (TMS320C30 View)

Listed below is a summary of the APPB memory map.

000000 –	003FFF	EPROM (Boot EPROM/remappable)
004000 –	3FFFFF	Unused
400000 –	4FFFFF	DRAM space
400000 –	43FFFF	256K-word DRAM minimum configuration
440000 –	47FFFF	256K-word DRAM minimum configuration
480000 –	4BFFFF	256K-word DRAM option bank 2
4C0000 –	4FFFFF	256K-word DRAM option bank 3
500000 –	7FFFFF	Unused
800000 –	801FFF	SRAM space 1 (16K-byte zero wait-state SRAM)
802000 –	805FFF	Reserved by TI
804000 –	805FFF	I/O Devices
804000 –	804FFF	4K-byte dual-port SRAM
805000 –	805FF6	I/O Expansion Bus
805FF7		Control Register R
805FF8 –	805FFF	dual-port RAM Semaphores (D0 only)
806000 –	807FFF	Reserved by TI
808000 –	8097FF	Memory mapped Peripherals
809800 –	809BFF	RAM Block 0
809C00 –	809FFF	RAM Block 1
80A000 –	EFFFFF	Unused
F00000 –	F03FFF	SRAM space 0 (16K-byte zero wait-state SRAM, remappable)
F00800 –	FFFFFF	Unused

Appendix B

Modules

Appendix	Name
B1	Module U5 – TMS320C30 Software Development Board
B2	Module U6 – TMS320C30 Software Development Board
B3	Module RAMDEC – TMS320C30 Software Development Board
B4	Module RDYEN – TMS320C30 Software Development Board
B5	Module RAMCONTROL – TMS320C30 SWDS DRAM Module
B6	Module RAMDEC – TMS320C30 SWDS DRAM Module

Appendix B1. TMS320C30 Software Development Board

```
Module U5
title'
DWG NAME        TMS320C30 SOFTWARE DEVELOPMENT BOARD
DWG #           2554377
COMPANY         TEXAS INSTRUMENTS INCORPORATED
ENGR            NAT SESHAN
DATE            10/01/88'

XSUC8 device 'P2018';

SA0       Pin 1;
SA1       Pin 2;
SA2       Pin 3;
SA3       Pin 4;
SA4       Pin 5;     "PC XT ADDRESS LINES – INPUTS
SA5       Pin 6;
SA6       Pin 7;
SA7       Pin 8;
SA8       Pin 9;
SA9       Pin 10;
NSMEMW    Pin 11;    "PC XT MEMORY WRITE STROBE
GND       Pin 12;
NSMEMR    Pin 13;    "PC XT MEMORY READ STROBE – INPUT
NSIOW     Pin 14;    "PC XT IO WRITE STROBE – INPUT
NSGBA     Pin 15;    "SDB READ STROBE – OUTPUT
NPQ       Pin 16;    "DUAL-PORT ADDRESS RANGE STROBE – INPUT
XAEN      Pin 17;    "PC XT BUS TRANSACTION DISABLE – INPUT
NRG       Pin 18;    "SDB CONTROL REGISTER R ENABLE – OUTPUT
NQG       Pin 19;    "SDB DUAL-PORT ADDRESS LATCH ENABLE – OUTPUT
NDPSEML   Pin 20;    "DUAL-PORT SEMAPHORE SELECT – OUTPUT
NDPCEL    Pin 21;    "DUAL-PORT SRAM CHIP ENABLE – OUTPUT
SGAB      Pin 22;    "HOST DATA BUS INPUT ENABLE – OUTPUT
NSIOR     Pin 23;    "PC XT IO READ STROBE – INPUT
VCC       Pin 24;

SA = [SA9, SA8, SA7, SA6, SA5, SA4, SA3, SA2, SA1 ,SA0];
 X  = .X.;

equations

          !NQG      =  !XAEN & (SA == ^h338);
          !NRG      =  !XAEN & (SA == ^h339);
          !NDPSEML  =  !XAEN & SA9 & SA8 & !SA7 & !SA6 & SA5 & SA4 & !SA3
                       & !NSIOW
                       # !XAEN & SA9 & SA8 & !SA7 & !SA6 & SA5 & SA4 & !SA3
                       & !NSIOR;
```

```
!NDPCEL     =  !XAEN & !NPQ;
SGAB        =  !NSIOW & !XAEN
               # !NSMEMW & !XAEN ;
!NSGBA      =  !XAEN & !NSIOR & (SA == ^h339)
               # !XAEN & !NSIOR & SA9 & SA8 & !SA7 & !SA6 & SA5
               & SA4 & !SA3
               # !XAEN & !NSMEMR & !NPQ;

end U5
```

Appendix B2. Module U6

```
Module U6
title'
DWG NAME    TMS320C30 SOFTWARE DEVELOPMENT BOARD
DWG #       2554377
COMPANY     TEXAS INSTRUMENTS INCORPORATED
ENGR        NAT SESHAN
DATE        10/01/88'

XSUF10      Device    'P20L8';

CIOA0       Pin 1;
CIOA1       Pin 2;
CIOA2       Pin 3;
CIOA3       Pin 4;
CIOA4       Pin 5;
CIOA5       Pin 6;
CIOA6       Pin 7;
CIOA7       Pin 8;
CIOA8       Pin 9;
CIOA9       Pin 10;
CIOA10      Pin 11;
GND         Pin 12;
CIOA11      Pin 13;
CIOA12      Pin 14;
TIOW        Pin 15;
NSRANGE     Pin 16;
CIORNW      Pin 17;
NFR         Pin 18;
NFG         Pin 19;
NDPMEMGR    Pin 20;
NDPSEMGR    Pin 21;
TIOR        Pin 22;
NCIOSTRB    Pin 23;
VCC         Pin 24;

            X = .X.;
            C = .C.;

            CIOA = [CIOA12,CIOA11,CIOA10,CIOA9,CIOA8,
                    CIOA7,CIOA6,CIOA5,CIOA4,CIOA3,CIOA2,CIOA1,CIOA0];

equations

            !NSRANGE    = !NCIOSTRB & !CIOA12
                          # !NCIOSTRB & (CIOA >= ^h1FF7);
            !NDPMEMGR   = !NCIOSTRB & !CIOA12;
            !NDPSEMGR   = !NCIOSTRB & (CIOA >= ^h1FF8);
```

```
!NFG        = !NCIOSTRB & !CIORNW & (CIOA == ^h1FF7);
!NFR        = !NCIOSTRB &  CIORNW & (CIOA == ^h1FF7);
!TIOR       = NCIOSTRB
              # (CIOA >= ^h1FF7)
              # !CIOA12
              # !CIORNW;

!TIOW       = NCIOSTRB
            # (CIOA >= ^h1FF7)
            # !CIOA12
            # CIORNW;
```

test_vectors

```
([CIOA, NCIOSTRB, CIORNW] ->
 [TIOR, TIOW, NSRANGE, NFG, NFR, NDPMEMGR, NDPSEMGR]);
```

READ OR WRITE TO A SEMAPHORE

```
[^h1FF8, 0, X] -> [0, 0, 0, 1, 1, 1, 0];
[^h1FF9, 0, X] -> [0, 0, 0, 1, 1, 1, 0];
[^h1FFA, 0, X] -> [0, 0, 0, 1, 1, 1, 0];
[^h1FFB, 0, X] -> [0, 0, 0, 1, 1, 1, 0];
[^h1FFC, 0, X] -> [0, 0, 0, 1, 1, 1, 0];
[^h1FFD, 0, X] -> [0, 0, 0, 1, 1, 1, 0];
[^h1FFE, 0, X] -> [0, 0, 0, 1, 1, 1, 0];
[^h1FFF, 0, X] -> [0, 0, 0, 1, 1, 1, 0];
```

WRITE TO F REGISTER

```
[^h1FF7, 0, 0] -> [0, 0, 0, 0, 1, 1, 1];
```

READ FROM F REGISTER

```
[^h1FF7, 0, 1] -> [0, 0, 0, 1, 0, 1, 1];
```

NCIOSTRB DISABLED

```
[ X  , 1, X] -> [0, 0, 1, 1, 1, 1, 1];
```

EXTERNAL READS

```
[^b1000000000000, 0, 1] -> [1, 0, 1, 1, 1, 1, 1];
[^b1000000000001, 0, 1] -> [1, 0, 1, 1, 1, 1, 1];
[^b1000000000010, 0, 1] -> [1, 0, 1, 1, 1, 1, 1];
[^b1000000000011, 0, 1] -> [1, 0, 1, 1, 1, 1, 1];
[^b1000000000100, 0, 1] -> [1, 0, 1, 1, 1, 1, 1];
[^b1000000000101, 0, 1] -> [1, 0, 1, 1, 1, 1, 1];
[^b1000000000110, 0, 1] -> [1, 0, 1, 1, 1, 1, 1];
[^b1000000000111, 0, 1] -> [1, 0, 1, 1, 1, 1, 1];
[^b1000000001000, 0, 1] -> [1, 0, 1, 1, 1, 1, 1];
[^b1000000001001, 0, 1] -> [1, 0, 1, 1, 1, 1, 1];
```

```
[^b1000000001010, 0, 1] -> [1, 0, 1, 1, 1, 1, 1];
[^b1000000001011, 0, 1] -> [1, 0, 1, 1, 1, 1, 1];
[^b1000000001100, 0, 1] -> [1, 0, 1, 1, 1, 1, 1];
[^b1000000001101, 0, 1] -> [1, 0, 1, 1, 1, 1, 1];
[^b1000000001110, 0, 1] -> [1, 0, 1, 1, 1, 1, 1];
[^b1000000001111, 0, 1] -> [1, 0, 1, 1, 1, 1, 1];
[^h1FF0, 0, 1] -> [1, 0, 1, 1, 1, 1, 1];
[^h1FF1, 0, 1] -> [1, 0, 1, 1, 1, 1, 1];
[^h1FF2, 0, 1] -> [1, 0, 1, 1, 1, 1, 1];
[^h1FF3, 0, 1] -> [1, 0, 1, 1, 1, 1, 1];
[^h1FF4, 0, 1] -> [1, 0, 1, 1, 1, 1, 1];
[^h1FF5, 0, 1] -> [1, 0, 1, 1, 1, 1, 1];
[^h1FF6, 0, 1] -> [1, 0, 1, 1, 1, 1, 1];
```

EXTERNAL IO WRITES

```
[^b1000000000000, 0, 0] -> [0, 1, 1, 1, 1, 1, 1];
[^b1000000000001, 0, 0] -> [0, 1, 1, 1, 1, 1, 1];
[^b1000000000010, 0, 0] -> [0, 1, 1, 1, 1, 1, 1];
[^b1000000000011, 0, 0] -> [0, 1, 1, 1, 1, 1, 1];
[^b1000000000100, 0, 0] -> [0, 1, 1, 1, 1, 1, 1];
[^b1000000000101, 0, 0] -> [0, 1, 1, 1, 1, 1, 1];
[^b1000000000110, 0, 0] -> [0, 1, 1, 1, 1, 1, 1];
[^b1000000000111, 0, 0] -> [0, 1, 1, 1, 1, 1, 1];
[^b1000000001000, 0, 0] -> [0, 1, 1, 1, 1, 1, 1];
[^b1000000001001, 0, 0] -> [0, 1, 1, 1, 1, 1, 1];
[^b1000000001010, 0, 0] -> [0, 1, 1, 1, 1, 1, 1];
[^b1000000001011, 0, 0] -> [0, 1, 1, 1, 1, 1, 1];
[^b1000000001100, 0, 0] -> [0, 1, 1, 1, 1, 1, 1];
[^b1000000001101, 0, 0] -> [0, 1, 1, 1, 1, 1, 1];
[^b1000000001110, 0, 0] -> [0, 1, 1, 1, 1, 1, 1];
[^b1000000001111, 0, 0] -> [0, 1, 1, 1, 1, 1, 1];
[^h1FF0, 0, 0] -> [0, 1, 1, 1, 1, 1, 1];
[^h1FF1, 0, 0] -> [0, 1, 1, 1, 1, 1, 1];
[^h1FF2, 0, 0] -> [0, 1, 1, 1, 1, 1, 1];
[^h1FF3, 0, 0] -> [0, 1, 1, 1, 1, 1, 1];
[^h1FF4, 0, 0] -> [0, 1, 1, 1, 1, 1, 1];
[^h1FF5, 0, 0] -> [0, 1, 1, 1, 1, 1, 1];
[^h1FF6, 0, 0] -> [0, 1, 1, 1, 1, 1, 1];
```

test_vectors

```
([CIOA12, NCIOSTRB, CIORNW] ->
[TIOR, TIOW, NSRANGE, NFG, NFR, NDPSEMGR, NDPMEMGR]);
```

DUAL-PORT SRAM READ OR WRITE

```
[0, 0, X] -> [0, 0, 0, 1, 1, 1 ,0];
```

end U6

Appendix B3. Module RAMDEC

```
module RAMDEC
title'
DWG NAME        TMS320C30 SOFTWARE DEVELOPMENT BOARD
DWG #     2554377
COMPANY   TEXAS INSTRUMENTS INCORPORATED
ENGR      TONY COOMES
DATE      10/01/88'

XSUB4     device    'P16L8';

a12       Pin 1;    "c30 address inputs
a13       Pin 2;
a14       Pin 3;
a15       Pin 4;
a16       Pin 5;
a17       Pin 6;
a18       Pin 7;
a19       Pin 8;
a20       Pin 9;
a21       Pin 11;
a22       Pin 13;
a23       Pin 14;
m_swap    Pin 15;   "sram/eprom swap bit
vss       Pin 10;

memen     Pin 18;   "dram expansion select
sram      Pin 17;   " sram select
eprom     Pin 16;   "eprom select
busen     Pin 12;   "eprom/dram data buffer select
vcc       Pin 20;

madd = [a23,a22,a21,a20,a19,a18,a17,a16,a15,a14,a13,a12];

equations

          "On reset the eprom and sram maps are swapped
          "         m_swap = 0        m_swap = 1
          "sram     F00000–F03FFF     000000–003FFF
          "eprom    000000–003FFF     F00000–F03FFF

          sram    = !(((madd >= ^h000) & (madd <= ^h003) & m_swap)
                    # ((madd >= ^hF00) & (madd <= ^hF03) & !m_swap));

          eprom   = !(((madd >= ^h000) & (madd <= ^h003) & !m_swap)
                    # ((madd >= ^hF00) & (madd <= ^hF03) & m_swap));

          memen   = !((madd >= ^h400) & (madd <= ^h4FF));

          busen   = !(!eprom # !memen);
```

```
test_vectors
([madd,  m_swap ] -> [sram, eprom, memen, busen])
 [^h000,  1   ] -> [ 0,    1,   1,    1 ];
 [^h000,  0   ] -> [ 1,    0,   1,    0 ];
 [^h004,  1   ] -> [ 1,    1,   1,    1 ];
 [^hF00,  1   ] -> [ 1,    0,   1,    0 ];
 [^hF00,  0   ] -> [ 0,    1,   1,    1 ];
 [^hFF0,  1   ] -> [ 1,    1,   1,    1 ];
 [^hF00,  1   ] -> [ 1,    0,   1,    0 ];
 [^h400,  0   ] -> [ 1,    1,   0,    0 ];
 [^h4CF,  1   ] -> [ 1,    1,   0,    0 ];
 [^h800,  1   ] -> [ 1,    1,   1,    1 ];

end RAMDEC
```

Appendix B4. Module RDYEN

```
module RDYEN
title'
DWG NAME        TMS320C30 SOFTWARE DEVELOPMENT BOARD
DWG #     2554377
COMPANY   TEXAS INSTRUMENTS INCORPORATED
ENGR      TONY COOMES
DATE      10/01/88'

XSUC3     device    'P16R4';

clk       Pin 1;
busen     Pin 2;    "eprom/dram data bus enable
eprom     Pin 3;    "eprom select
strb      Pin 4;    "c30 strobe
rd_wr     Pin 5;    "c30 read/write
bhiz      Pin 7;    "dram expansion bus hold
oe        Pin 11;
vss       Pin 10;

dat_rd    Pin 19;   "data read enable
dat_wr    Pin 18;   "data write enable
prdy      Pin 17;   "eprom ready
epromcs   Pin 12;   "eprom chip select
vcc       Pin 20;

c = .C.;

equations

"note: bhiz is active for 1 TMS320C30 clock cycle at the end of a dram
"     access. This provides the necessary turn off time between
"     dram/eprom accesses.

dat_rd    =    !(!busen  & !strb & rd_wr & bhiz);

dat_wr    =    (!busen  & !strb & !rd_wr & bhiz);

epromcs   =    !(!busen & rd_wr & !strb & !eprom & bhiz);

prdy      :=   !(!busen & !strb & rd_wr & prdy & !eprom & bhiz);
```

```
test_vectors
([clk, strb, busen, rd_wr, eprom, oe, bhiz  ] -> prdy)
 [ c,  1,   1,   1,   1,   0,   1  ] -> 1;
 [ c,  0,   0,   1,   0,   0,   0  ] -> 1;
 [ c,  0,   0,   1,   0,   0,   1  ] -> 0;
 [ c,  0,   0,   1,   0,   0,   1  ] -> 1;
 [ c,  0,   0,   1,   0,   0,   1  ] -> 0;
 [ c,  1,   0,   1,   0,   0,   1  ] -> 1;
 [ c,  1,   0,   1,   0,   0,   1  ] -> 1;
test_vectors
([strb, busen, rd_wr, eprom, bhiz  ] -> [dat_rd, dat_wr, epromcs])
 [ 1,   1,   1,   1,   1  ] -> [ 1,   0,   1  ];
 [ 0,   0,   1,   1,   1  ] -> [ 0,   0,   1  ];
 [ 0,   0,   0,   1,   1  ] -> [ 1,   1,   1  ];
 [ 0,   1,   1,   1,   1  ] -> [ 1,   0,   1  ];
 [ 1,   0,   1,   1,   1  ] -> [ 1,   0,   1  ];
 check eprom
 [ 1,   0,   1,   0,   1  ] -> [ 1,   0,   1  ];
 [ 0,   0,   1,   0,   1  ] -> [ 0,   0,   0  ];
 [ 0,   0,   1,   0,   0  ] -> [ 1,   0,   1  ];
 [ 0,   0,   0,   0,   1  ] -> [ 1,   1,   1  ];
 [ 0,   1,   1,   0,   1  ] -> [ 1,   0,   1  ];
 [ 1,   0,   1,   1,   1  ] -> [ 1,   0,   1  ];

end RDYEN
```

Appendix B5. Module RAMCONTROL

```
Module RAMCONTROL
title'
DWG NAME      320C30 SWDS DRAM MODULE
DWG #         2554397
COMPANY       TEXAS INSTRUMENTS INCORPORATED
ENGR          TONY COOMES
DATE          10/01/88'

XDUE5     device     'P16R8';

clk       Pin 1;
refreq_   Pin 2;     "refresh request
strb_     Pin 3;     "c30 strobe
rd        Pin 4;     "c30 read/write
memen_    Pin 5;     "memory board chip select
oe_       Pin 11;    "pal output enable
vss       Pin 10;

s0        Pin 19;    "state variable
refclr    Pin 18;    "refresh clear
casen     Pin 17;    "column address strobe
ren       Pin 16;    "write strobe
rasen     Pin 15;    "row address strobe
mrdy      Pin 14;    "dram ready strobe
busact    Pin 13;    "dram bus active
s1        Pin 12;    "state variable
vcc       Pin 20;

"define machine states
"[refclr,rasen,casen,mrdy,busact,s0,s1];

idle    =    ^b1111111;
ras0    =    ^b1011111;
cas0    =    ^b1000111;
cas1    =    ^b1011101;
whld    =    ^b1111110;
trp     =    ^b1111001;
ref1    =    ^b0101111;
ref2    =    ^b0001111;
ref3    =    ^b0011111;
ref4    =    ^b1111101;

refreq  =    !refreq_;    "convert to positive logic
strb    =    !strb_;
memen   =    !memen_;
oe      = !oe_;

c = .C.;
```

```
c = .C.;

output = [refclr,rasen,casen,mrdy,busact,s0,s1];

equations

ren      :=     !(!rd & !strb_);   high on read, low on writes
state_diagram output

state idle:
        case  ( refreq &  strb &  memen)      :ref1;    "ref has 1st priority
              ( refreq &  strb & !memen)      :ref1;
              ( refreq & !strb &  memen)      :ref1;
              ( refreq & !strb & !memen)      :ref1;
              (!refreq &  strb &  memen)      :ras0;
              (!refreq &  strb & !memen)      :idle;
              (!refreq & !strb &  memen)      :idle;
              (!refreq & !strb & !memen)      :idle;
        endcase;

state   ras0:
        goto cas0;

state   cas0:                   "cycle cas on page mode reads
        case  rd                        :cas1;
              !rd                       :whld;
        endcase;

state   cas1:                   "cycle cas on page mode reads
        case  strb & !refreq            :cas0;
              strb &  refreq            :trp ;
              !strb & !refreq           :trp ;
              !strb &  refreq           :trp ;
        endcase;

state   whld:                   "wait for refreq or !strb
        case  strb & !refreq            :whld;
              strb &  refreq            :ref1;
              !strb & !refreq           ;idle;
              !strb &  refreq           :ref1;
              endcase;

state   trp:                    "cas,ras high
        case  refreq                    :ref1;
              !refreq                   :idle;
        endcase;

state   ref1:                   "cas,refclr low
        goto ref2;

state   ref2:                   "ras low
        goto ref3;
```

```
state     ref3:                    "cas high
          goto ref4;

state     ref4:                    "ras high
          goto idle;

test_vectors  "page mode read, ref, page mode read
([clk,refreq ,strb , rd,memen ,  oe ]->[output,ren])
 [ c,  0,   0,   1,   0,   1  ]->[idle ,  1 ];
 [ c,  0,   1,   1,   1,   1  ]->[ras0 ,  1 ];
 [ c,  0,   1,   1,   1,   1  ]->[cas0 ,  1 ];
 [ c,  0,   1,   1,   1,   1  ]->[cas1 ,  1 ];
 [ c,  0,   1,   1,   1,   1  ]->[cas0 ,  1 ];
 [ c,  1,   1,   1,   1,   1  ]->[cas1 ,  1 ];
 [ c,  1,   1,   1,   1,   1  ]->[trp  ,  1 ];
 [ c,  1,   1,   1,   1,   1  ]->[ref1 ,  1 ];
 [ c,  1,   1,   1,   1,   1  ]->[ref2 ,  1 ];
 [ c,  1,   1,   1,   1,   1  ]->[ref3 ,  1 ];
 [ c,  0,   1,   1,   1,   1  ]->[ref4 ,  1 ];
 [ c,  0,   1,   1,   1,   1  ]->[idle ,  1 ];
 [ c,  0,   1,   1,   1,   1  ]->[ras0 ,  1 ];
 [ c,  0,   1,   1,   1,   1  ]->[cas0 ,  1 ];
 [ c,  0,   1,   1,   1,   1  ]->[cas1 ,  1 ];
 [ c,  0,   1,   1,   1,   1  ]->[cas0 ,  1 ];
 [ c,  0,   1,   1,   1,   1  ]->[cas1 ,  1 ];
 [ c,  0,   0,   1,   1,   1  ]->[trp  ,  1 ];
 [ c,  0,   0,   1,   0,   1  ]->[idle ,  1 ];

test_vectors  "write cycle
([clk,refreq ,strb , rd, memen, oe  ]->[output,ren])
 [ c,  0,   0,   0,   0,   1  ]->[idle ,  1 ];
 [ c,  0,   1,   0,   1,   1  ]->[ras0 ,  0 ];
 [ c,  0,   1,   0,   1,   1  ]->[cas0 ,  0 ];
 [ c,  0,   1,   0,   1,   1  ]->[whld ,  0 ];
 [ c,  0,   1,   0,   1,   1  ]->[whld ,  0 ];
 [ c,  0,   1,   0,   1,   1  ]->[whld ,  0 ];
 [ c,  0,   0,   0,   1,   1  ]->[idle ,  1 ];
 [ c,  0,   0,   1,   0,   1  ]->[idle ,  1 ];

"write cycle /ref
 [ c,  0,   0,   0,   0,   1  ]->[idle ,  1 ];
 [ c,  0,   1,   0,   1,   1  ]->[ras0 ,  0 ];
 [ c,  1,   1,   0,   1,   1  ]->[cas0 ,  0 ];
 [ c,  1,   1,   0,   1,   1  ]->[whld ,  0 ];
 [ c,  1,   1,   0,   1,   1  ]->[ref1 ,  0 ];
 [ c,  1,   1,   0,   1,   1  ]->[ref2 ,  0 ];
 [ c,  1,   0,   0,   0,   1  ]->[ref3 ,  1 ];
 [ c,  0,   0,   1,   0,   1  ]->[ref4 ,  1 ];
 [ c,  0,   0,   1,   0,   1  ]->[idle ,  1 ];

end RAMCONTROL
```

Appendix B6. Module RAMDEC

```
module RAMDEC
title'
DWG NAME        320C30 SWDS DRAM MODULE
DWG #     2554397
COMPANY   TEXAS INSTRUMENTS INCORPORATED
ENGR      TONY COOMES
DATE      10/01/88'

XDUD5     device    'P16R4';

clk       Pin 1;
refclr    Pin 2;    "clear refresh stat
a18       Pin 3;    "c30 address 18
a19       Pin 4;    "c30 address 19
memen     Pin 5;    "dram board memory enable
strb      Pin 6;    "c30 strobe
mux       Pin 7;    "address mux
oe        Pin 11;   "pal output enable
vss       Pin 10;

ras0      Pin 17;   "ras select 0
ras1      Pin 16;   "ras select 1
ras2      Pin 15;   "ras select 2
ras3      Pin 14;   "ras select 3
rowsel    Pin 13;   "row address select
vcc       Pin 20;

c = .C.;

equations

ras0 := !(!refclr # (!a19 & !a18 & !memen & !strb));
ras1 := !(!refclr # (!a19 &  a18 & !memen & !strb));
ras2 := !(!refclr # ( a19 & !a18 & !memen & !strb));
ras3 := !(!refclr # ( a19 &  a18 & !memen & !strb));

rowsel = mux;
```

```
test_vectors   "page mode read, ref, page mode read
([clk,refclr, memen, strb, a19, a18, oe]->[ras0, ras1, ras2, ras3])
 [ c,  1,    1,  1,  0,  0,  0 ]->[ 1,  1,  1,  1 ];
 [ c,  1,    0,  0,  0,  0,  0 ]->[ 0,  1,  1,  1 ];
 [ c,  1,    0,  0,  0,  1,  0 ]->[ 1,  0,  1,  1 ];
 [ c,  1,    0,  0,  1,  0,  0 ]->[ 1,  1,  0,  1 ];
 [ c,  1,    0,  0,  1,  1,  0 ]->[ 1,  1,  1,  0 ];
 [ c,  1,    1,  0,  1,  1,  0 ]->[ 1,  1,  1,  1 ];
 [ c,  1,    0,  1,  1,  1,  0 ]->[ 1,  1,  1,  1 ];
 [ c,  0,    0,  1,  1,  1,  0 ]->[ 0,  0,  0,  0 ];
 [ c,  1,    0,  1,  1,  1,  0 ]->[ 1,  1,  1,  1 ];
 [ c,  0,    0,  0,  1,  1,  0 ]->[ 0,  0,  0,  0 ];
 [ c,  1,    0,  0,  1,  1,  0 ]->[ 1,  1,  1,  0 ];

test_vectors "rowsel
(mux -> rowsel)
 1  ->  1;
 0  ->  0;

end RAMDEC
```

Appendix C

TMS320C30 Application Board Schematics

Appendix	Title
C1	TMS320C30 Software Development Schematics
C2	TMS320C30 SWDS DRAM Module Schematics

Appendix C1. TMS320C30 Software Development Schematics

REVISIONS			
REV	DESCRIPTION	DATE	APPROVED

NOTES: UNLESS OTHERWISE SPECIFIED:

1. ALL AS, ALS, LS DEVICES ARE PREFIXED WITH AN SN74
2. VCC IS APPLIED TO PIN 8 OF ALL 8-PIN IC'S, PIN 14 OF ALL 14-PIN IC'S, PIN 16 OF ALL 16-PIN IC'S, PIN 20 OF ALL 20-PIN IC'S, ETC.
3. GROUND IS APPLIED TO PIN 4 OF ALL 8-PIN IC'S, PIN 7 OF ALL 14-PIN IC'S, PIN 8 OF ALL 16-PIN IC'S, PIN 10 OF ALL 20-PIN IC'S, ETC.
4. DEVICE TYPE, PIN NUMBERS, AND REFERENCE DESIGNATOR OF GATES ARE SHOWN AS FOLLOWS:

00 AND 04 = DEVICE TYPES
1, 2, AND 3 = PIN NUMBERS
U06 AND U07 = REFERENCE DESIGNATORS

5. RESISTANCE VALUES ARE IN OHMS.
6. RESISTORS ARE 1/4 WATT, 5%.
7. CAPACITANCE VALUES ARE IN MICROFARADS.

COMPUTER GENERATED DRAWING : DO NOT REVISE MANUALLY

-1 QTY	ITEM NO	PART OR IDENTIFYING NUMBER	NOMENCLATURE OF DESCRIPTION	NOTES

PARTS LIST

REVISION STATUS OF SHEETS										
REV	*	*	*	*	*	*	*	*	*	*
SH	1	2	3	4	5	6	7	8	9	10
REV	*	*								
SH	11	12	13	14	15	16	17	18	19	20
REV										
SH	21	22	23	24	25	26	27	28	29	30
REV										
SH	31	32	33	34	35	36	37	38	39	40

NEXT ASSY	USED ON
2554375	7119

APPLICATION

		DATE
DWN	N. Seshan	06-15-88
CHK		
ENGR	N. Seshan	06-15-88
APVD ENGR	Tony Coomes	
QA		
APVD MFG		
RLSE		

TEXAS INSTRUMENTS
Data Systems Group

TMS320C30 SOFTWARE DEVELOPMENT BOARD

SIZE	FSCM NO	DRAWING NO	REV
B	00000	2554377	*

SCALE NONE | SHEET 1 OF 12

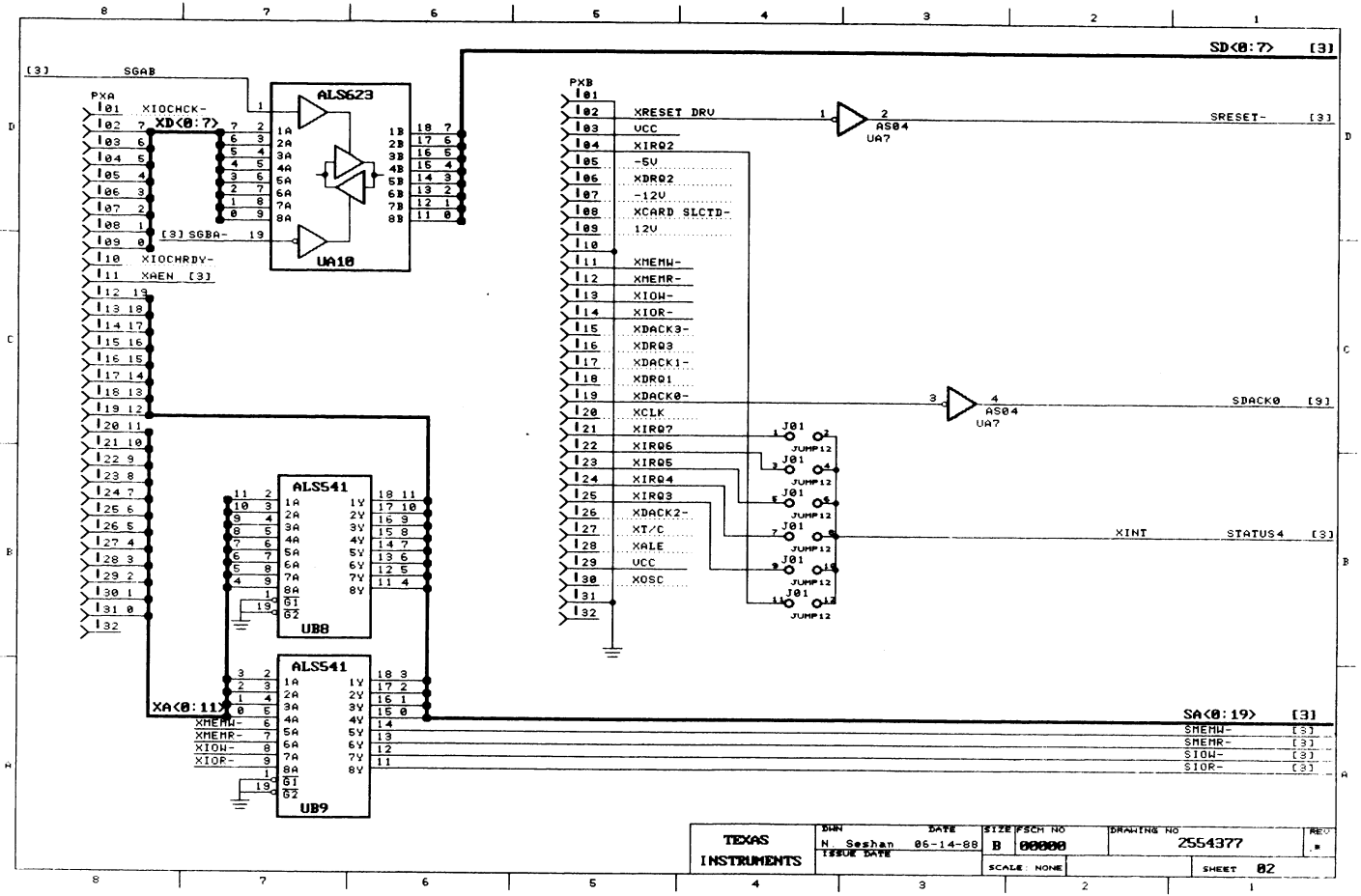
SD<0:7> [3]
[3] SGAB
PXA
XIOCHCK-
XD<0:7>
ALS623
UA10
[3] SGBA-
XIOCHRDY-
XAEN [3]
PXB
XRESET DRV
VCC
XIRQ2
-5V
XDRQ2
-12V
XCARD SLCTD-
12V
XMEMW-
XMEMR-
XIOW-
XIOR-
XDACK3-
XDRQ3
XDACK1-
XDRQ1
XDACK0-
XCLK
XIRQ7
XIRQ6
XIRQ5
XIRQ4
XIRQ3
XDACK2-
XT/C
XALE
VCC
XOSC
AS04
UA7
SRESET- [3]
SDACK0 [9]
JUMPER
XINT
STATUS4 [3]
ALS541
UB8
UB9
XA<0:11>
XMEMW-
XMEMR-
XIOW-
XIOR-
SA<0:19> [3]
SMEMW- [3]
SMEMR- [3]
SIOW- [3]
SIOR- [3]
TEXAS INSTRUMENTS
DWN N. Seshan
DATE 06-14-88
ISSUE DATE
SIZE B
FSCM NO 00000
DRAWING NO 2554377
REV
SCALE NONE
SHEET 02

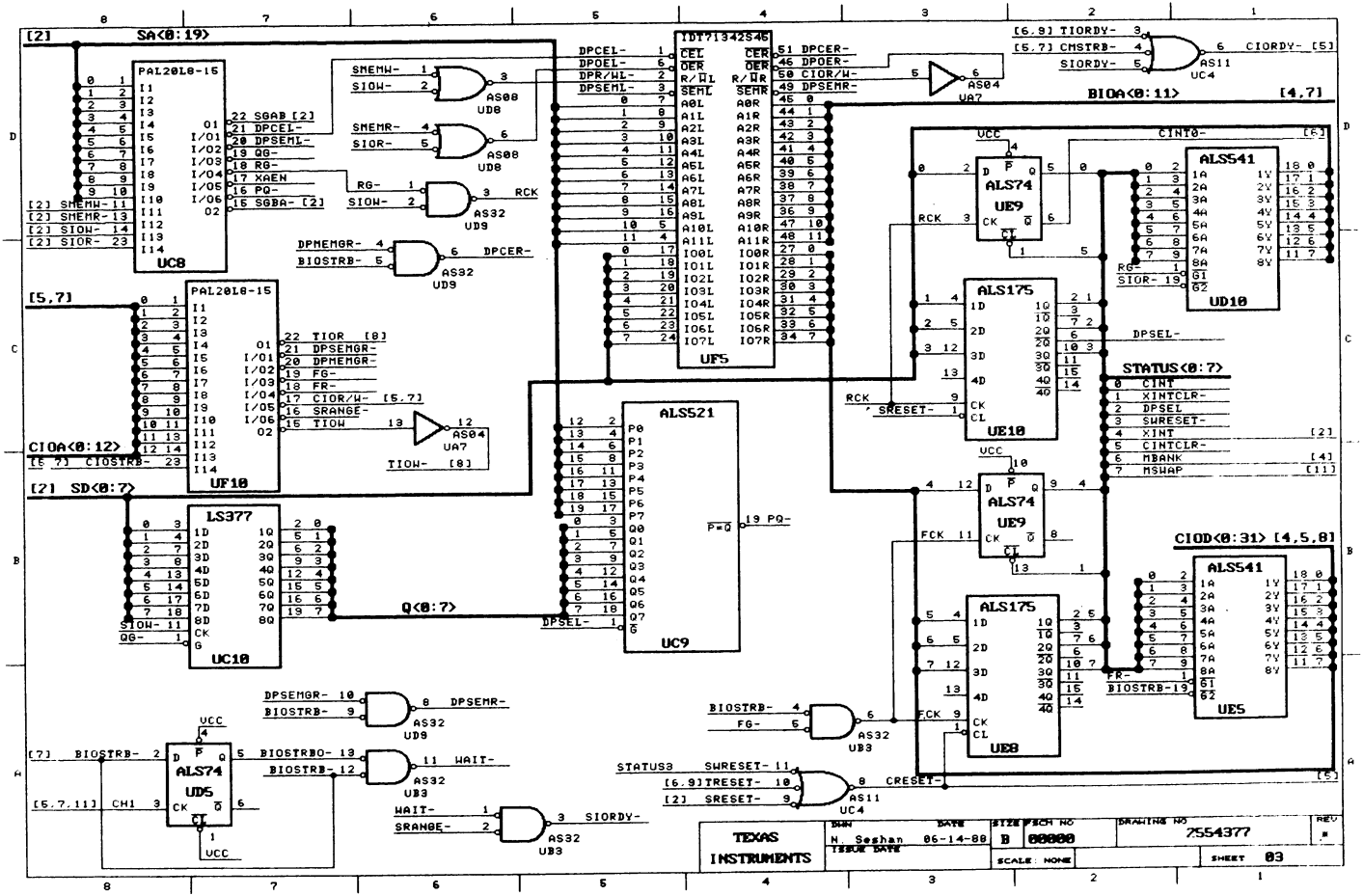
SA<0:19>
PAL20L8-15
UC8
PAL20L8-15
UF10
IDT71342S45
UF5
ALS521
UC9
LS377
UC10
ALS74
UE9
ALS175
UE10
ALS541
UD10
ALS541
UE5
ALS175
UE8
ALS74
UD5
BIOA<0:11>
STATUS<0:7>
CIOA<0:12>
SD<0:7>
Q<0:7>
CIOD<0:31>
TEXAS INSTRUMENTS
N. Seshan
06-14-88
7554377
SCALE: NONE
SHEET 03

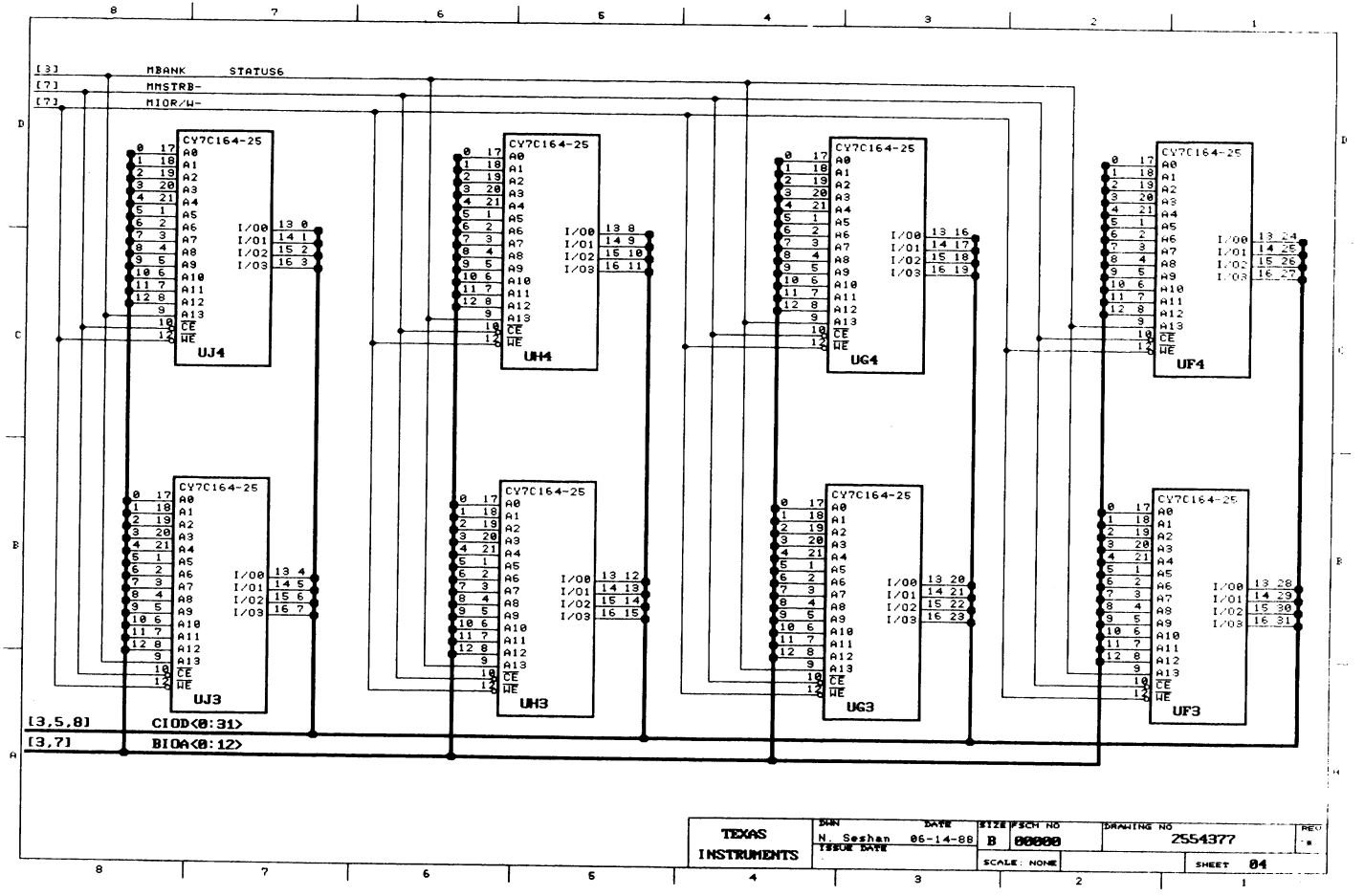
[3] MBANK STATUS6
[7] MMSTRB-
[7] MIOR/W-
CY7C164-25
UJ4
UH4
UG4
UF4
UJ3
UH3
UG3
UF3
I/O0
I/O1
I/O2
I/O3
[3,5,8] CIOD<0:31>
[3,7] BIOA<0:12>
TEXAS INSTRUMENTS
DWN N. Seshan
DATE 06-14-88
ISSUE DATE
SIZE B
SCH NO 00000
SCALE: NONE
DRAWING NO 2554377
REV
SHEET 04

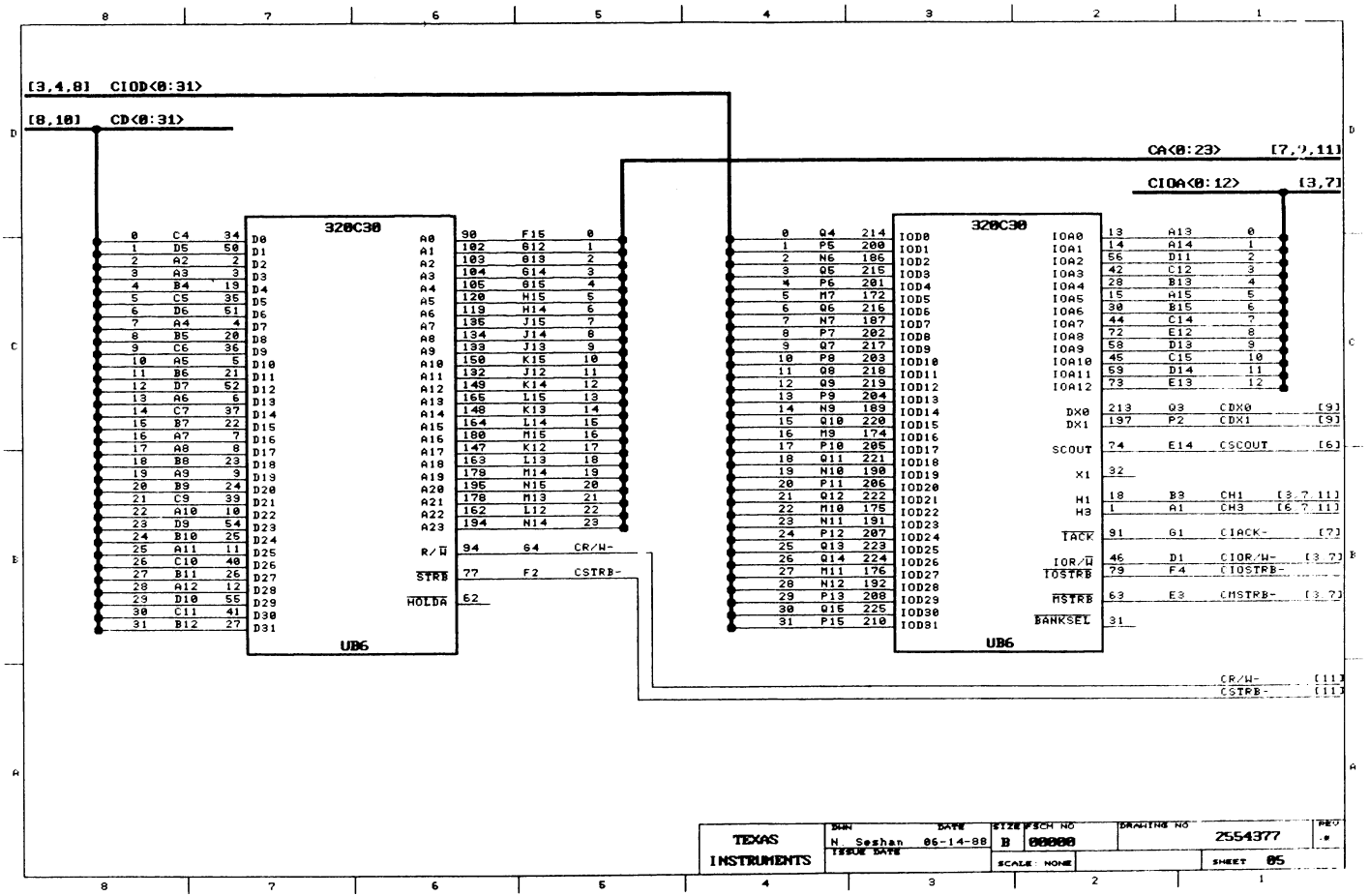
[3,4,8] CIOD<0:31>
[8,10] CD<0:31>
CA<0:23> [7,9,11]
CIOA<0:12> [3,7]
320C30
UB6
D0 D1 D2 D3 D4 D5 D6 D7 D8 D9 D10 D11 D12 D13 D14 D15 D16 D17 D18 D19 D20 D21 D22 D23 D24 D25 D26 D27 D28 D29 D30 D31
A0 A1 A2 A3 A4 A5 A6 A7 A8 A9 A10 A11 A12 A13 A14 A15 A16 A17 A18 A19 A20 A21 A22 A23
R/W
STRB
HOLDA
0 C4 34
1 D5 50
2 A2 2
3 A3 3
4 B4 19
5 C5 35
6 D6 51
7 A4 4
8 B5 20
9 C6 36
10 A5 5
11 B6 21
12 D7 52
13 A6 6
14 C7 37
15 B7 22
16 A7 7
17 A8 8
18 B8 23
19 A9 9
20 B9 24
21 C9 33
22 A10 10
23 D9 54
24 B10 25
25 A11 11
26 C10 40
27 B11 26
28 A12 12
29 D10 55
30 C11 41
31 B12 27
90 F15 0
102 G12 1
103 G13 2
104 G14 3
105 G15 4
120 H15 5
119 H14 6
136 J15 7
134 J14 8
133 J13 9
150 K15 10
132 J12 11
149 K14 12
165 L15 13
148 K13 14
164 L14 15
180 M15 16
147 K12 17
163 L13 18
178 M14 19
195 N15 20
178 M13 21
162 L12 22
194 N14 23
94 G4 CR/W-
77 F2 CSTRB-
62
IOD0 IOD1 IOD2 IOD3 IOD4 IOD5 IOD6 IOD7 IOD8 IOD9 IOD10 IOD11 IOD12 IOD13 IOD14 IOD15 IOD16 IOD17 IOD18 IOD19 IOD20 IOD21 IOD22 IOD23 IOD24 IOD25 IOD26 IOD27 IOD28 IOD29 IOD30 IOD31
IOA0 IOA1 IOA2 IOA3 IOA4 IOA5 IOA6 IOA7 IOA8 IOA9 IOA10 IOA11 IOA12
DX0 DX1
SCOUT
X1
H1 H3
IACK
IOR/W
IOSTRB
MSTRB
BANKSEL
0 Q4 214
1 P5 200
2 N6 186
3 Q5 215
4 P6 201
5 M7 172
6 Q6 216
7 N7 187
8 P7 202
9 Q7 217
10 P8 203
11 Q8 218
12 Q9 219
13 P9 204
14 N9 189
15 Q10 220
16 M9 174
17 P10 205
18 Q11 221
19 N10 190
20 P11 206
21 Q12 222
22 M10 175
23 N11 191
24 P12 207
25 Q13 223
26 Q14 224
27 M11 176
28 N12 192
29 P13 208
30 Q15 225
31 P15 210
13 A13 0
14 A14 1
56 D11 2
42 C12 3
28 B13 4
15 A15 5
30 B15 6
44 C14 7
72 E12 8
58 D13 9
45 C15 10
59 D14 11
73 E13 12
213 Q3 CDX0 [9]
197 P2 CDX1 [9]
74 E14 CSCOUT [6]
32
18 B3 CH1 [3,7,11]
1 A1 CH3 [6,7,11]
91 G1 CIACK- [7]
46 D1 CIOR/W- [3,7]
79 F4 CIOSTRB-
63 E3 CMSTRB- [3,7]
31
CR/W- [11]
CSTRB- [11]
TEXAS INSTRUMENTS
DWN N. Seshan DATE 06-14-88
ISSUE DATE
SIZE B
FSCH NO 00000
DRAWING NO 2554377
REV .0
SCALE: NONE
SHEET 05

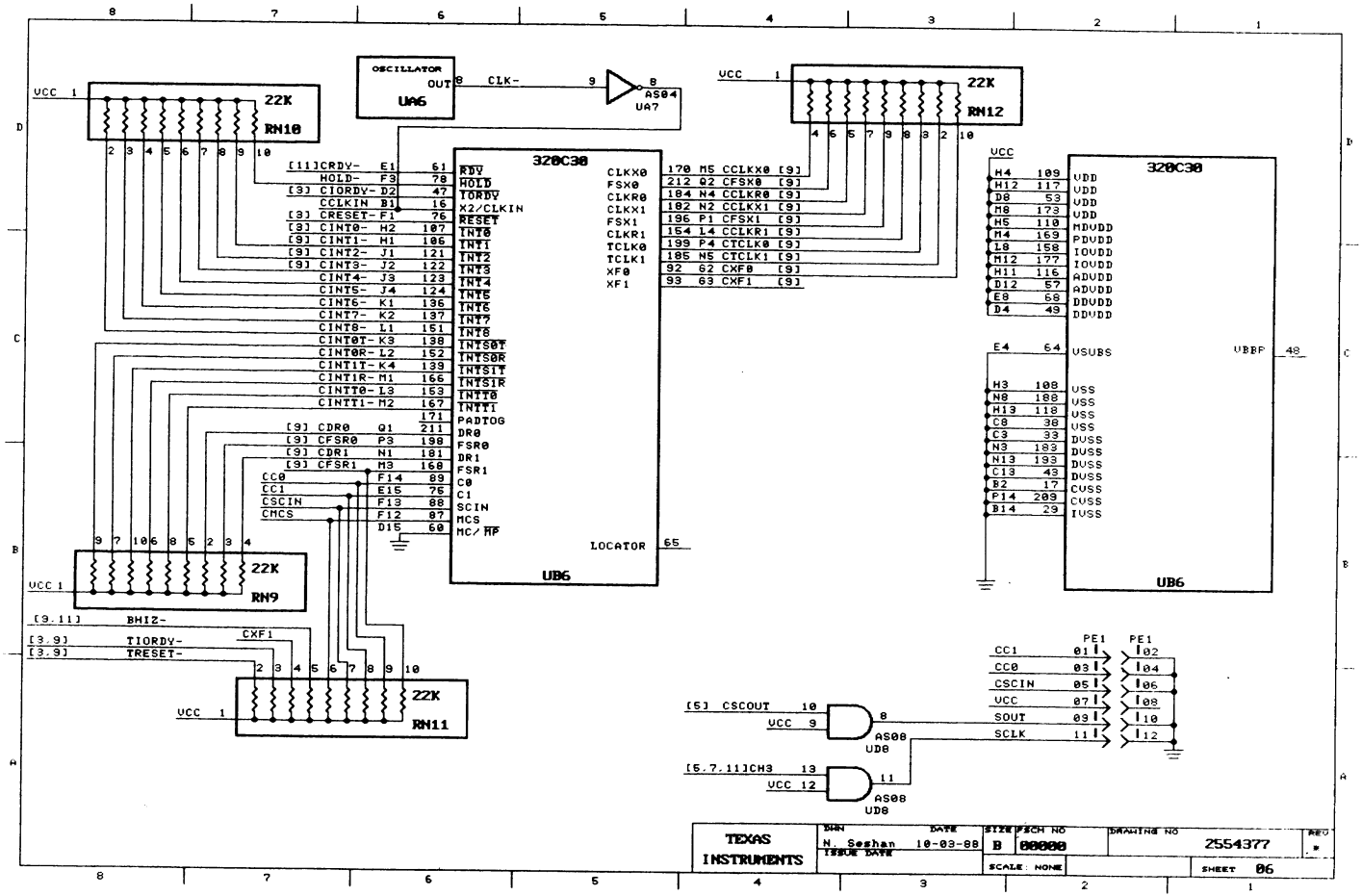
OSCILLATOR
UA6
OUT
CLK-
AS04
UA7
22K
RN10
RN11
RN12
RN9
320C30
UB6
VCC
[11]CRDY- E1 61
HOLD- F3 78
[3] CIORDY- D2 47
CCLKIN B1 16
[3] CRESET- F1 76
[3] CINT0- H2 107
[9] CINT1- H1 106
[9] CINT2- J1 121
[9] CINT3- J2 122
CINT4- J3 123
CINT5- J4 124
CINT6- K1 136
CINT7- K2 137
CINT8- L1 151
CINT0T- K3 138
CINT0R- L2 152
CINT1T- K4 139
CINT1R- M1 166
CINTT0- L3 153
CINTT1- M2 167
171
[9] CDR0 Q1 211
[9] CFSR0 P3 198
[9] CDR1 N1 181
[9] CFSR1 M3 168
CC0 F14 89
CC1 E15 76
CSCIN F13 88
CMCS F12 87
D15 60
RDY
HOLD
TORDY
X2/CLKIN
RESET
INT8
INT1
INT2
INT3
INT4
INT5
INT6
INT7
INT8
INTS0T
INTS0R
INTS1T
INTS1R
INTT0
INTT1
PADTOG
DR0
FSR0
DR1
FSR1
C0
C1
SCIN
MCS
MC/MP
LOCATOR 65
CLKX0 170 M5 CCLKX0 [9]
FSX0 212 Q2 CFSX0 [9]
CLKR0 184 N4 CCLKR0 [9]
CLKX1 192 N2 CCLKX1 [9]
FSX1 196 P1 CFSX1 [9]
CLKR1 154 L4 CCLKR1 [9]
TCLK0 199 P4 CTCLK0 [9]
TCLK1 185 N5 CTCLK1 [9]
XF0 92 G2 CXF0 [9]
XF1 93 G3 CXF1 [9]
H4 109 VDD
H12 117 VDD
D8 53 VDD
M8 173 VDD
H5 110 MDVDD
M4 169 PDVDD
L8 158 IOVDD
M12 177 IOVDD
H11 116 ADVDD
D12 57 ADVDD
E8 68 DDVDD
D4 49 DDVDD
E4 64 VSUBS
UBBP 48
H3 108 VSS
N8 188 VSS
H13 118 VSS
C8 38 VSS
C3 33 DVSS
N3 183 DVSS
N13 193 DVSS
C13 43 DVSS
B2 17 CVSS
P14 209 CVSS
B14 29 IVSS
[9.11] BHIZ-
[3.9] TIORDY-
[3.9] TRESET-
CXF1
[5] CSCOUT 10
[5.7.11]CH3 13
AS08
UD8
PE1
CC1 01 02
CC0 03 04
CSCIN 05 06
VCC 07 08
SOUT 09 10
SCLK 11 12
TEXAS INSTRUMENTS
DWN N. Seshan
DATE 10-03-88
ISSUE DATE
SIZE B
FSCM NO 00000
DRAWING NO 2554377
REV *
SCALE: NONE
SHEET 06

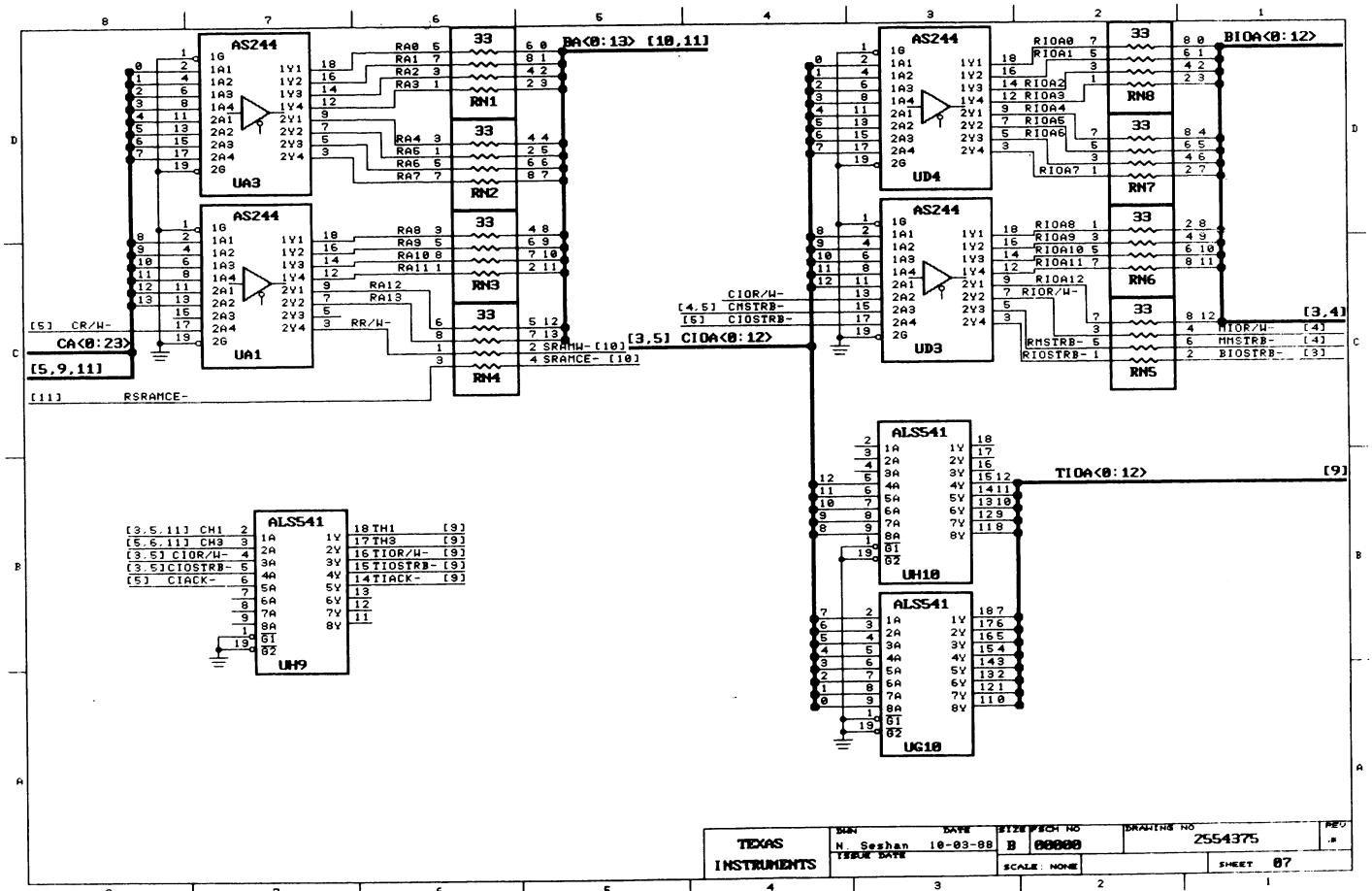
AS244
UA3
UA1
UD4
UD3
RN1
RN2
RN3
RN4
RN5
RN6
RN7
RN8
33
BA<0:13> [10,11]
BIOA<0:12>
[5] CR/W-
CA<0:23>
[5,9,11]
[11] RSRAMCE-
RA0
RA1
RA2
RA3
RA4
RA5
RA6
RA7
RA8
RA9
RA10
RA11
RA12
RA13
RR/W-
SRAMW- [10]
SRAMCE- [10]
[3,5] CIOA<0:12>
CIOR/W-
[4.5] CMSTRB-
[5] CIOSTRB-
RIOA0
RIOA1
RIOA2
RIOA3
RIOA4
RIOA5
RIOA6
RIOA7
RIOA8
RIOA9
RIOA10
RIOA11
RIOA12
RIOR/W-
RMSTRB- 5
RIOSTRB- 1
MIOR/W- [4]
MMSTRB- [4]
BIOSTRB- [3]
[3,4]
ALS541
UH10
UG10
UH9
TIOA<0:12>
[9]
[3.5.11] CH1
[5.6.11] CH3
[3.5] CIOR/W-
[3.5]CIOSTRB-
[5] CIACK-
TH1
TH3
TIOR/W-
TIOSTRB-
TIACK-
TEXAS INSTRUMENTS
DWN
N. Seshan
DATE
10-03-88
ISSUE DATE
SIZE
B
SCH NO
00000
SCALE: NONE
DRAWING NO
2554375
SHEET
07
REV

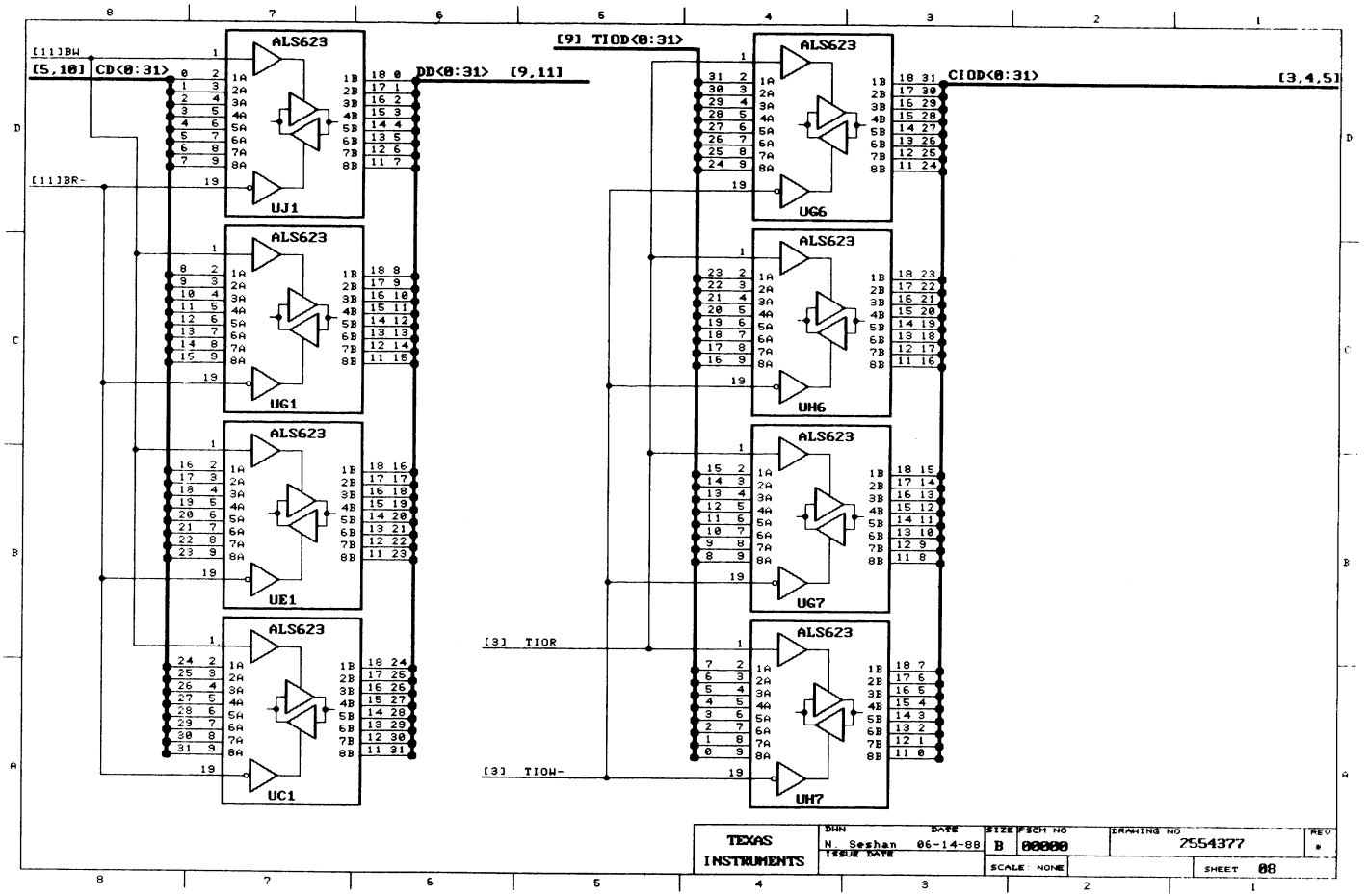
[11]BW
[5,10] CD<0:31>
[11]BR-
[9] TIOD<0:31>
DD<0:31> [9,11]
CIOD<0:31> [3,4,5]
[3] TIOR
[3] TIOW-
ALS623
UJ1
UG1
UE1
UC1
UG6
UH6
UG7
UH7
TEXAS INSTRUMENTS
DWN N. Seshan
DATE 06-14-88
ISSUE DATE
SIZE B
FSCH NO 00000
DRAWING NO 2554377
REV *
SCALE: NONE
SHEET 08

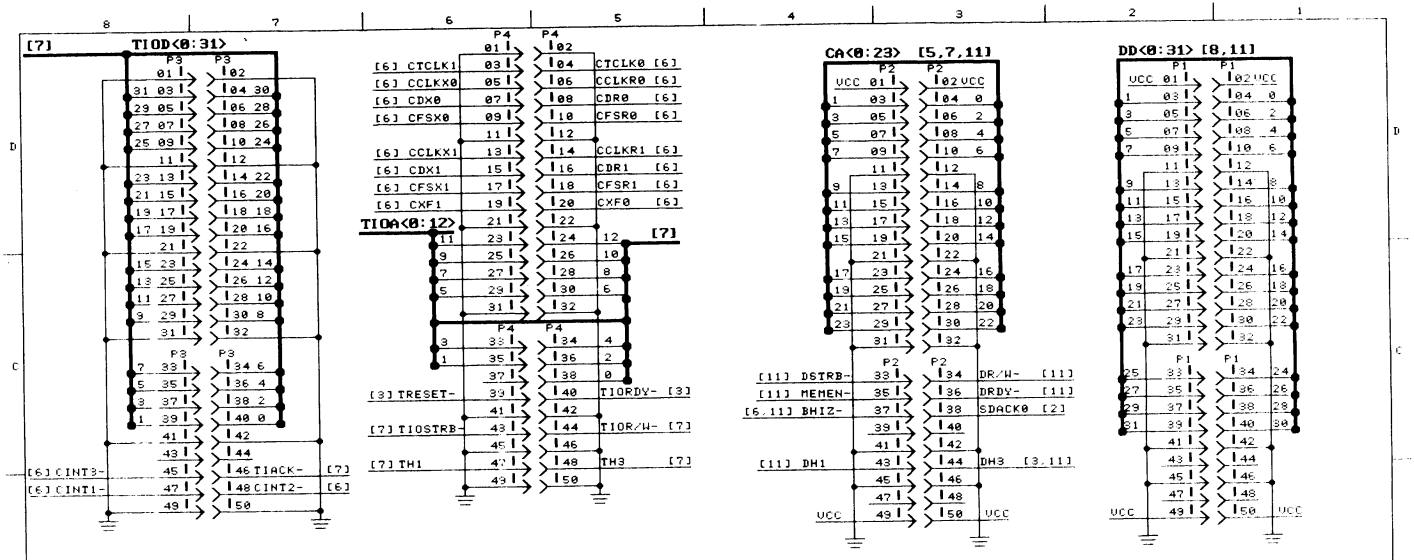

TEXAS INSTRUMENTS	DWN N. Seshan	DATE 06-14-88	SIZE B	FSCH NO 00000	DRAWING NO 2554377
	ISSUE DATE		SCALE: NONE		SHEET 09

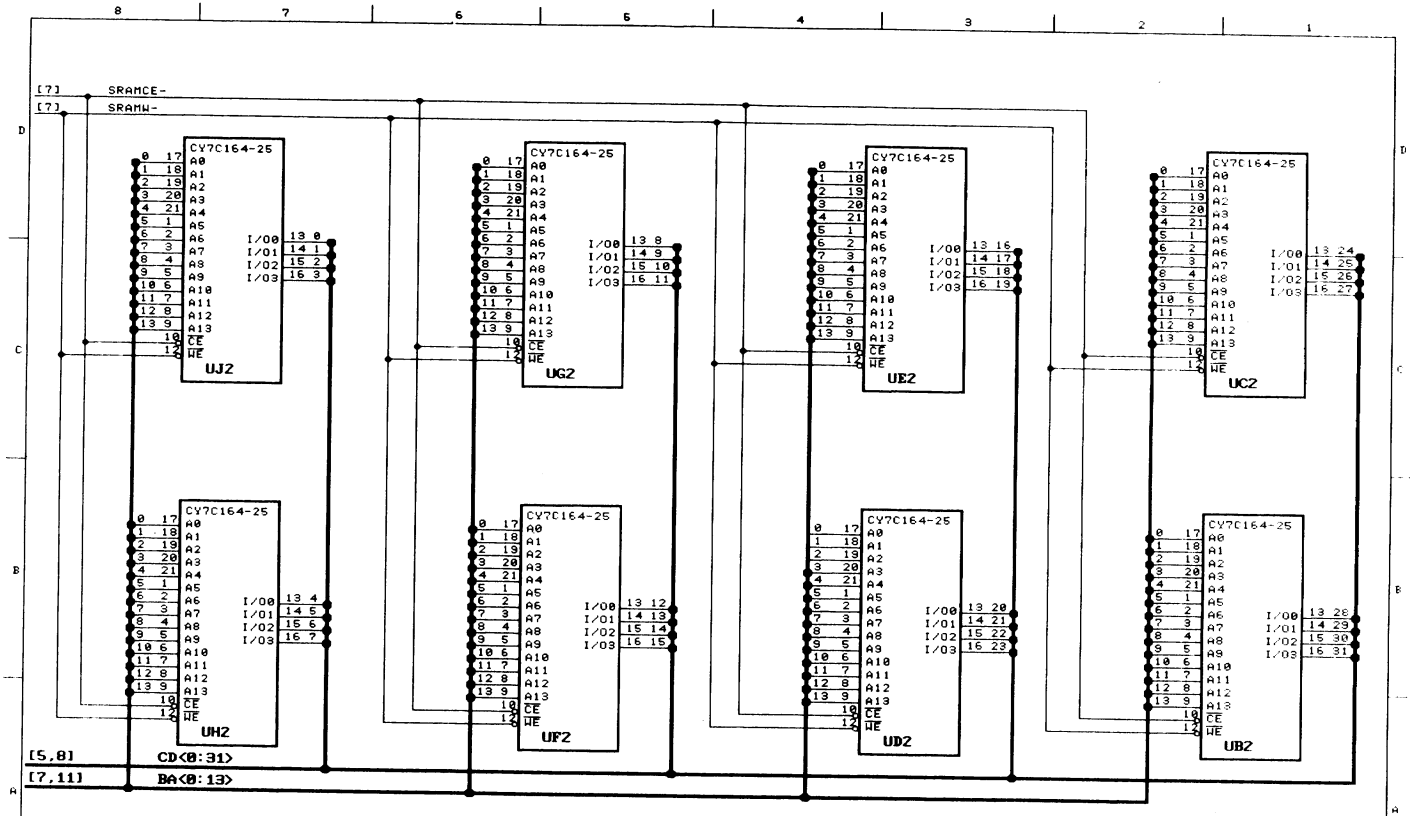

TEXAS INSTRUMENTS	DWN N. Seshan	DATE 06-14-88	SIZE B	FSCH NO 00000	DRAWING NO 2554377	REV *
	ISSUE DATE		SCALE: NONE		SHEET 10	

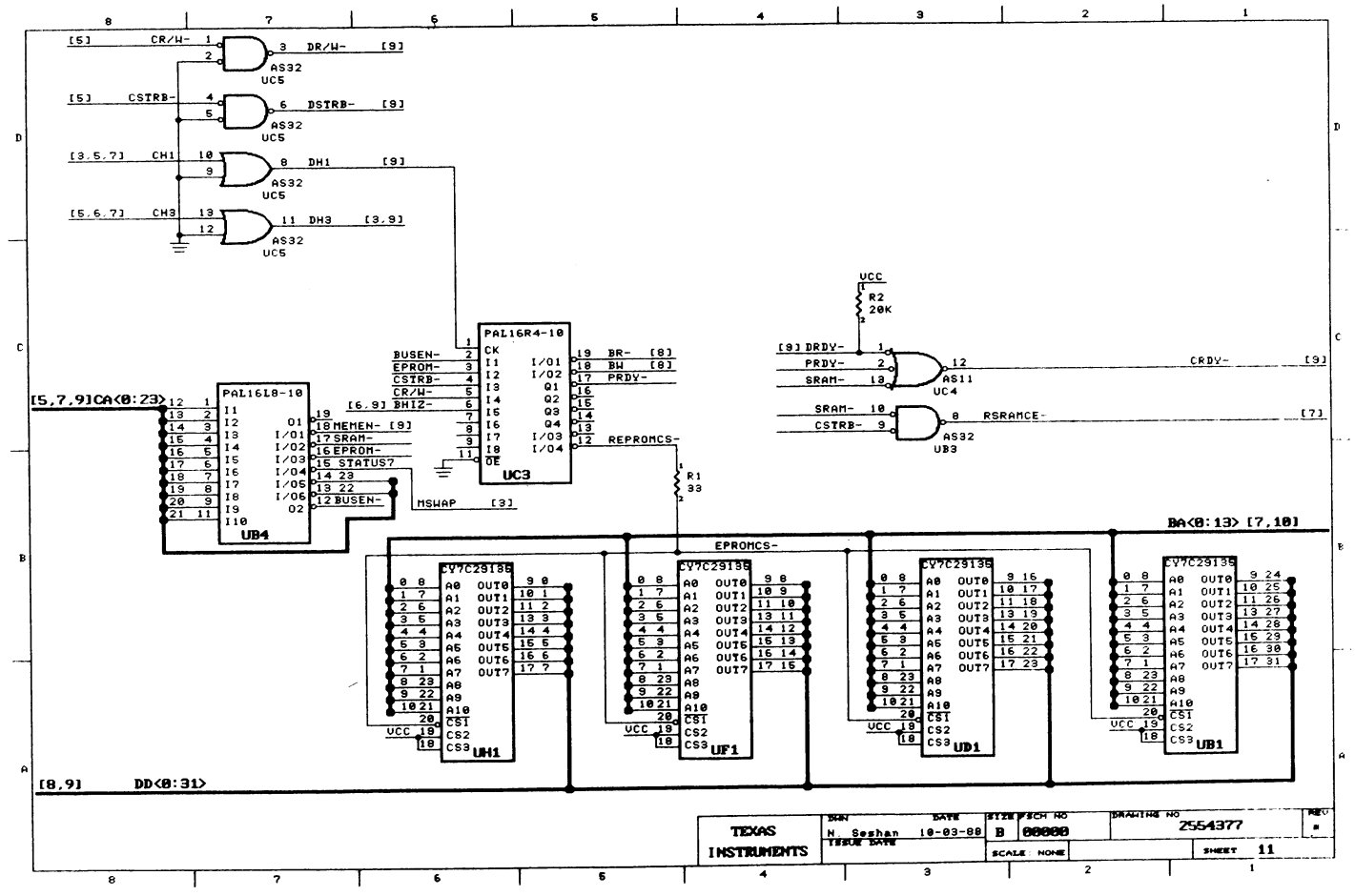

TEXAS INSTRUMENTS	DRN N. Seshan	DATE 10-03-88	SIZE B	FSCH NO 00000	DRAWING NO 2554377
	ISSUE DATE		SCALE NONE		SHEET 11

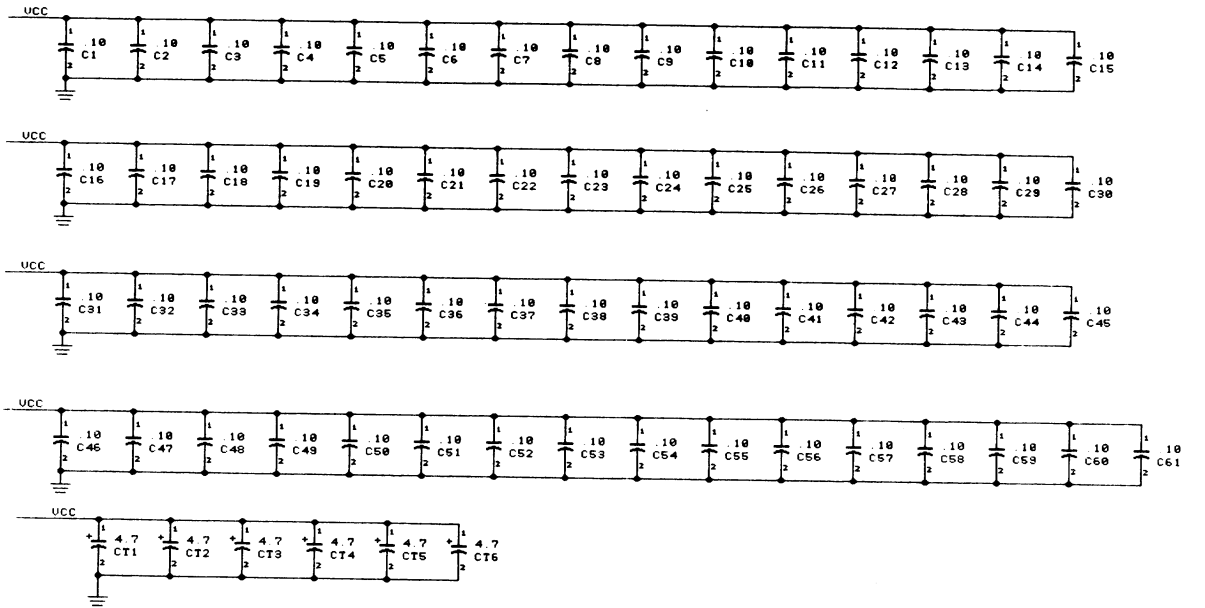

TEXAS INSTRUMENTS	DWN N. Seshan	DATE 06-16-88	SIZE B	FSCH NO 00000	DRAWING NO 2554377	REV
	ISSUE DATE		SCALE: NONE		SHEET 12	

Appendix C2. TMS320C30 SWDS DRAM Module Schematics

NOTES: UNLESS OTHERWISE SPECIFIED

1 ALL WS ALS IS DEVICES ARE PREFIXED WITH AN SN74

2 VCC IS APPLIED TO PIN 8 OF ALL 8-PIN IC's.
PIN 14 OF ALL 14-PIN IC's. PIN 16 OF ALL
16-PIN IC's. PIN 20 OF ALL 20-PIN IC's. ETC.

3 GROUND IS APPLIED TO PIN 4 OF ALL 8-PIN IC's.
PIN 7 OF ALL 14-PIN IC's. PIN 8 OF ALL 16-PIN
IC's. PIN 10 OF ALL 20-PIN IC's. ETC.

4 DEVICE TYPE, PIN NUMBERS, AND REFERENCE
DESIGNATOR OF GATES ARE SHOWN AS FOLLOWS:

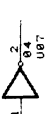

00 AND 04 = DEVICE TYPES
1 2 AND 3 = PIN NUMBERS
U06 AND U07 = REFERENCE DESIGNATORS

5 RESISTANCE VALUES ARE IN OHMS

6 RESISTORS ARE 1/4 WATT 5%

7 CAPACITANCE VALUES ARE IN MICROFARADS

REVISIONS

REV	DESCRIPTION	DATE	APPROVED

COMPUTER GENERATED DRAWING ; DO NOT REVISE MANUALLY

PART OR IDENTIFYING NUMBER | NOMENCLATURE OR DESCRIPTION | NOTE

PARTS LIST

DRN T COLEMAN DATE 07-12-88
CHK DATE
ENGR T COOMES DATE 07-12-88
APVD ENGR DATE
QA DATE
APVD MFG DATE

TEXAS INSTRUMENTS
Data Systems Group

320C30 SWDS DRAM MODULE

SIZE B FSCM NO 00000 DRAWING NO 2554397 REV
SCALE NONE SHEET 1 OF 8

REVISION STATUS OF SHEETS

REV	A	*	*	*	*	*	*	*	*	*
SH	1	2	3	4	5	6	7	8	9	10
REV										
SH	11	12	13	14	15	16	17	18	19	20
REV										
SH	21	22	23	24	25	26	27	28	29	30
REV										
SH	31	32	33	34	35	36	37	38	39	40

2554395 | 7119

NEXT ASSY | USED ON

APPLICATION

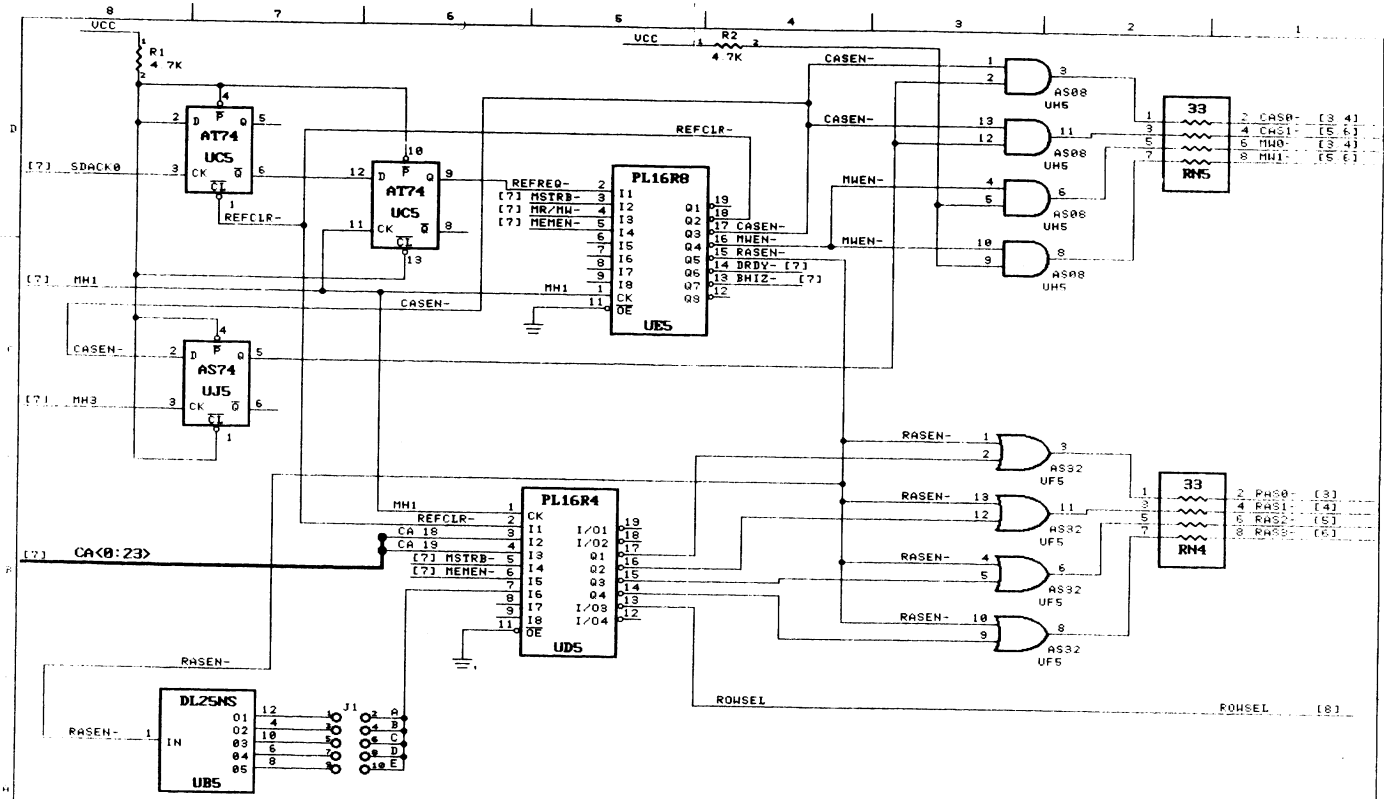

DRAM CONTROL

TEXAS INSTRUMENTS	DWN T.COLEMAN	DATE 07-12-88	SIZE B	FSCH NO 00000	DRAWING NO 2554397
	ISSUE DATE		SCALE: NONE		SHEET 2

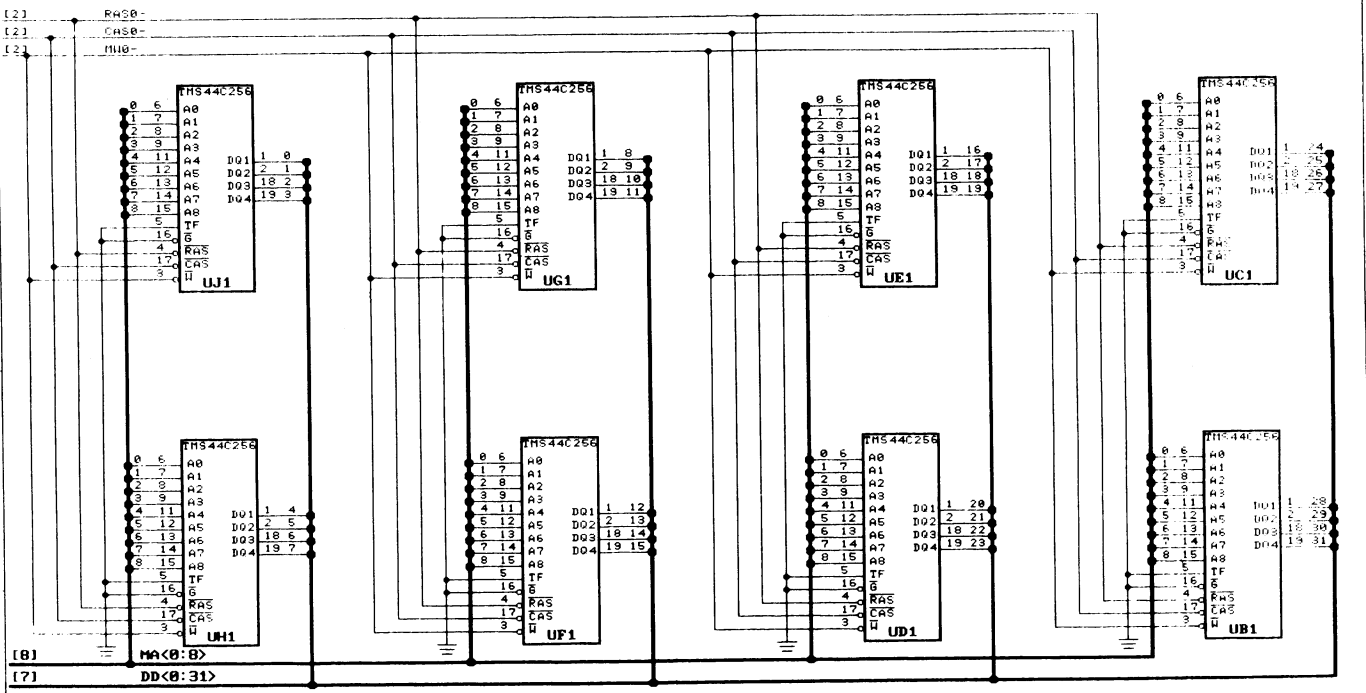

TEXAS INSTRUMENTS	DWN T COLEMAN	DATE 07-12-88	SIZE B	#SCH NO 00000	DRAWING NO 2554397
	ISSUE DATE		SCALE NONE		SHEET 03

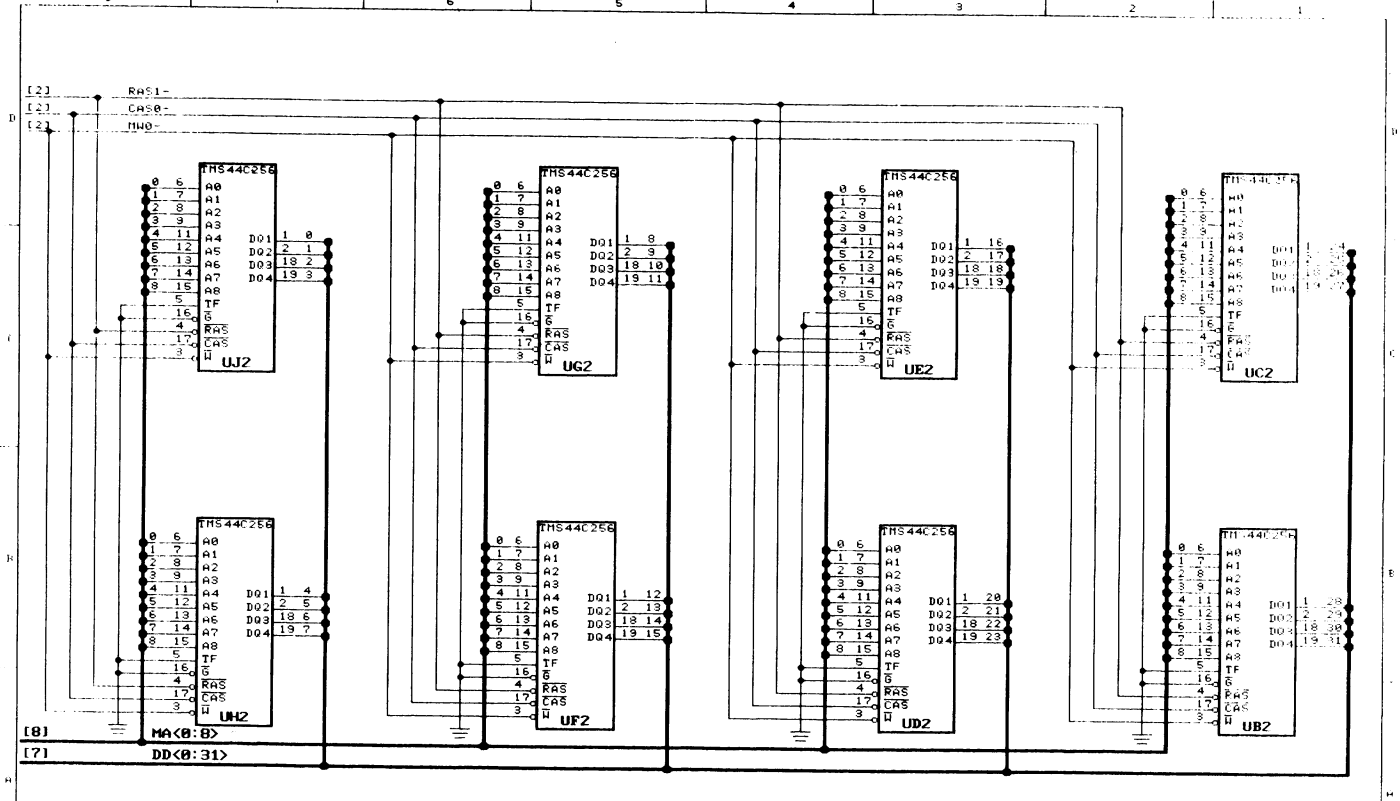

DRAM BANK 1

TEXAS INSTRUMENTS	DWN T COLEMAN	DATE 07-12-88	SIZE B	FSCH NO 00000	DRAWING NO 2554397
	ISSUE DATE		SCALE: NONE		SHEET 04

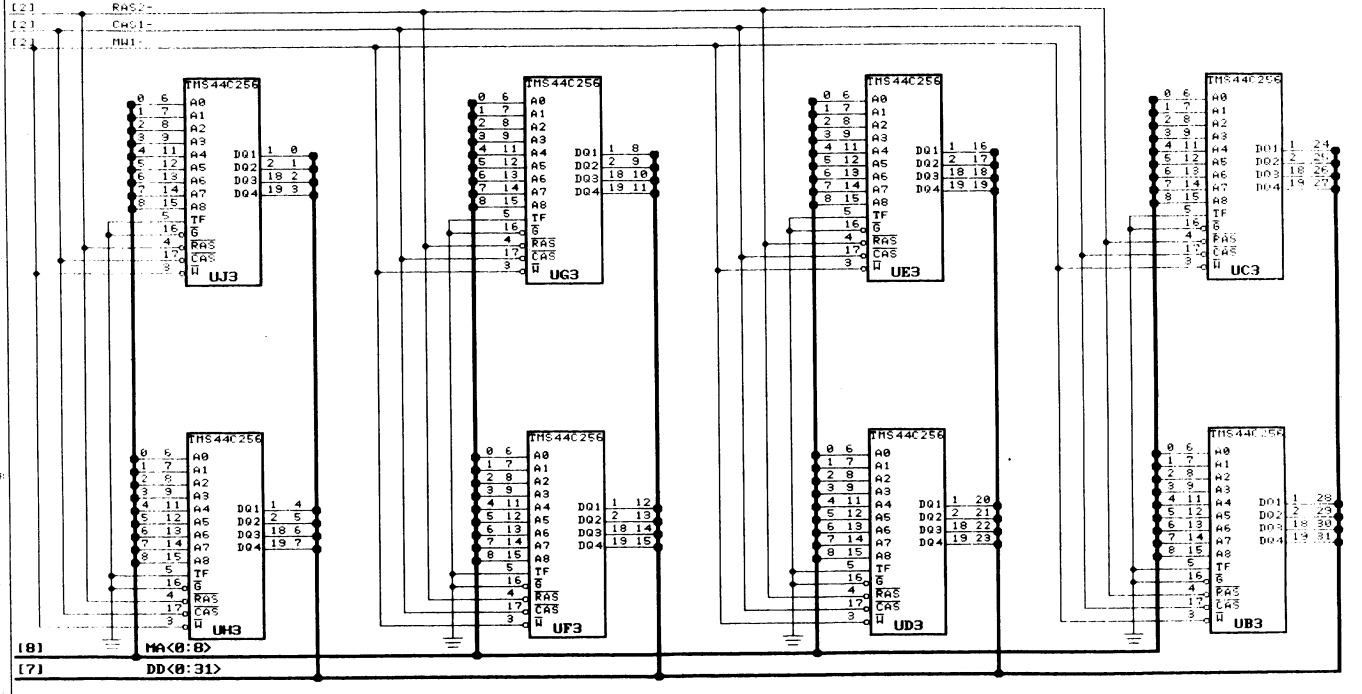

DRAM BANK 2

TEXAS INSTRUMENTS	DWN T COLEMAN	DATE 07-12-88	SIZE B	FSCH NO 00000	DRAWING NO 2554397
	ISSUE DATE		SCALE NONE		SHEET 05

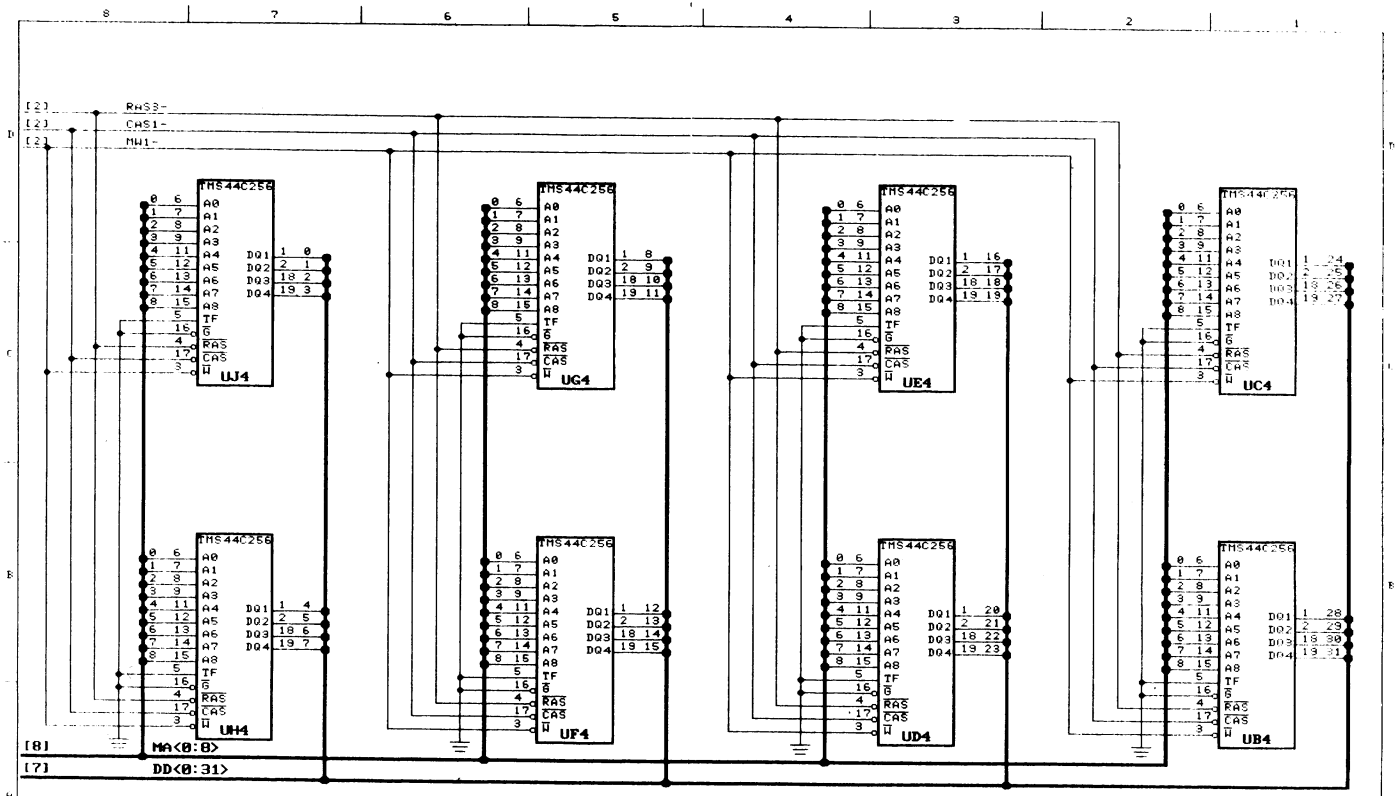

TEXAS INSTRUMENTS	DWN T. COLEMAN	DATE 07-12-88	SIZE B	FSCM NO 00000	DRAWING NO 2554397
	ISSUE DATE		SCALE NONE		SHEET 06

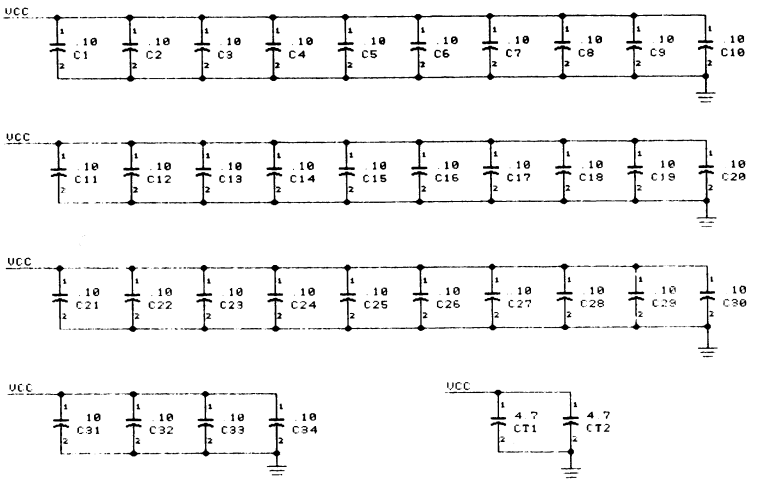

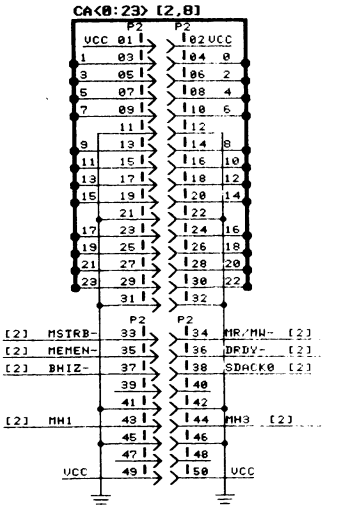

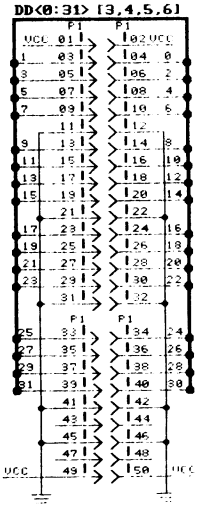

EXPANSION HEADERS

TEXAS INSTRUMENTS	DWN T COLEMAN	DATE 07-12-88	SIZE B	SCH NO 00000	DRAWING NO 2554397
	TBOM DATE		SCALE NONE		SHEET 07

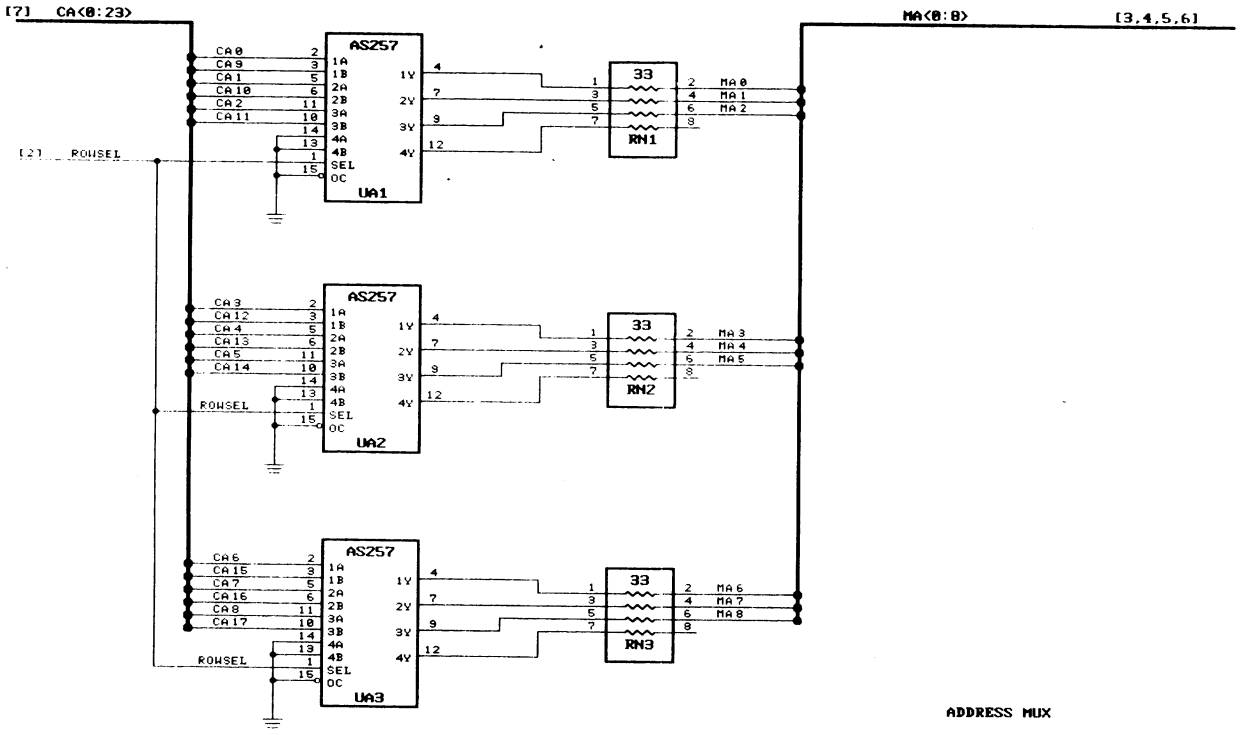

TEXAS INSTRUMENTS	DWN T COLEMAN DATE 08-16-88	SIZE B	SCH NO 00000	DRAWING NO 2554397
	ISSUE DATE	SCALE: NONE		SHEET 08