PHILIPS

Data handbook

Electronic components and materials

Components and materials

Book C12 1986

Potentiometers, encoders and switches

PHILIPS

Potentiometers, encoders and switches

C12 1986

POTENTIOMETERS, ENCODERS AND SWITCHES

page

Preface 2

Selection guide 8

General
Introduction 3
Terms and definitions 4

Device data
1. Control potentiometers
Carbon rotary, CP13, CP16, CP23 11
Modular carbon and cermet rotary, PP12, PP17 33
Cermet rotary, MCP23 131
Carbon slide, CSP25, CSP40, CSP60 135
Wirewound rotary, WP22, WP24 163

2. Preset potentiometers
Carbon open versions, CTP10, CTP14, CTP18 177
Carbon closed versions, ECP10 197
Cermet open versions, MTP10 205
Cermet closed versions, EMP10 211

3. Multiturn carbon potentiometers
Tuning types, CMP10, CMP20, CMP40 221
With bandswitch, CMP/SK-SL 231
Long life, CMP10L, CMP20L, CMP40L 233

4. Focus potentiometers
With solder tags, MFU 245
With conductive rubber, MFU-CR 253
With V_{g2} control, MFU-DST, MFU-V_{g2} 257

5. Encoder
Incremental encoder, MPG256 267

6. Switches
Test switches 272
Band switches 277
Circuit breaker switch 279

7. Index of catalogue numbers 285

DATA HANDBOOK SYSTEM

Our Data Handbook System comprises more than 60 books with specifications on electronic components, subassemblies and materials. It is made up of four series of handbooks:

ELECTRON TUBES	BLUE
SEMICONDUCTORS	RED
INTEGRATED CIRCUITS	PURPLE
COMPONENTS AND MATERIALS	GREEN

The contents of each series are listed on pages iv to viii.

The data handbooks contain all pertinent data available at the time of publication, and each is revised and reissued periodically.

When ratings or specifications differ from those published in the preceding edition they are indicated with arrows in the page margin. Where application information is given it is advisory and does not form part of the product specification.

Condensed data on the preferred products of Philips Electronic Components and Materials Division is given in our Preferred Type Range catalogue (issued annually).

Information on current Data Handbooks and on how to obtain a subscription for future issues is available from any of the Organizations listed on the back cover.
Product specialists are at your service and enquiries will be answered promptly.

ELECTRON TUBES (BLUE SERIES)

The blue series of data handbooks comprises:

T1	**Tubes for r.f. heating**
T2a	**Transmitting tubes for communications, glass types**
T2b	**Transmitting tubes for communications, ceramic types**
T3	**Klystrons**
T4	**Magnetrons for microwave heating**
T5	**Cathode-ray tubes** Instrument tubes, monitor and display tubes, C.R. tubes for special applications
T6	**Geiger-Müller tubes**
T8	**Colour display systems** Colour TV picture tubes, colour data graphic display tube assemblies, deflection units
T9	**Photo and electron multipliers**
T10	**Plumbicon camera tubes and accessories**
T11	**Microwave semiconductors and components**
T12	**Vidicon and Newvicon camera tubes**
T13	**Image intensifiers and infrared detectors**
T15	**Dry reed switches**
T16	**Monochrome tubes and deflection units** Black and white TV picture tubes, monochrome data graphic display tubes, deflection units

SEMICONDUCTORS (RED SERIES)

The red series of data handbooks comprises:

S1 **Diodes**
Small-signal silicon diodes, voltage regulator diodes (< 1,5 W), voltage reference diodes, tuner diodes, rectifier diodes

S2a **Power diodes**

S2b **Thyristors and triacs**

S3 **Small-signal transistors**

S4a **Low-frequency power transistors and hybrid modules**

S4b **High-voltage and switching power transistors**

S5 **Field-effect transistors**

S6 **R.F. power transistors and modules**

S7 **Surface mounted semiconductors**

S8a **Light-emitting diodes**

S8b **Devices for optoelectronics**
Optocouplers, photosensitive diodes and transistors, infrared light-emitting diodes and infrared sensitive devices, laser and fibre-optic components

S9 **Power MOS transistors**

S10 **Wideband transistors and wideband hybrid IC modules**

S11 **Microwave transistors**

S12 **Surface acoustic wave devices**

S13 **Semiconductor sensors**

INTEGRATED CIRCUITS (PURPLE SERIES)

The NEW SERIES of handbooks is now completed. With effect from the publication date of this handbook the "N" in the handbook code number will be deleted.
Handbooks to be replaced during 1986 are shown below.

The purple series of handbooks comprises:

IC01	**Radio, audio and associated systems** Bipolar, MOS	new issue 1986 IC01N 1985
IC02a/b	**Video and associated systems** Bipolar, MOS	new issue 1986 IC02Na/b 1985
IC03	**Integrated circuits for telephony** Bipolar, MOS	new issue 1986 IC03N 1985
IC04	**HE4000B logic family** CMOS	new issue 1986 IC4 1983
IC05N	**HE4000B logic family — uncased ICs** CMOS	published 1984
IC06N	**High-speed CMOS; PC74HC/HCT/HCU** Logic family	published 1986
IC08	**ECL 10K and 100K logic families**	New issue 1986 IC08N 1984
IC09N	**TTL logic series**	published 1986
IC10	**Memories** MOS, TTL, ECL	new issue 1986 IC7 1982
IC11N	**Linear LSI**	published 1985
Supplement to IC11N	**Linear LSI**	published 1986
IC12	**I^2C-bus compatible ICs**	not yet issued
IC13	**Semi-custom** Programmable Logic Devices (PLD)	new issue 1986 IC13N 1985
IC14N	**Microprocessors, microcontrollers and peripherals** Bipolar, MOS	published 1985
IC15	**FAST TTL logic series**	new issue 1986 IC15N 1985
IC16	**CMOS integrated circuits for clocks and watches**	first issue 1986
IC17	**Integrated Services Digital Networks (ISDN)**	not yet issued
IC18	**Microprocessors and peripherals**	new issue 1986*

* The Microprocessors were included in handbook IC14N 1985, so IC18 will replace that part of IC14N.

COMPONENTS AND MATERIALS (GREEN SERIES)

The green series of data handbooks comprises:

C1 **Programmable controller modules**
PLC modules, PC20 modules

C2 **Television tuners, coaxial aerial input assemblies, surface acoustic wave filters**

C3 **Loudspeakers**

C4 **Ferroxcube potcores, square cores and cross cores**

C5 **Ferroxcube for power, audio/video and accelerators**

C6 **Synchronous motors and gearboxes**

C7 **Variable capacitors**

C8 **Variable mains transformers**

C9 **Piezoelectric quartz devices**

C10 **Connectors**

C11 **Varistors, thermistors and sensors**

C12 **Potentiometers, encoders and switches**

C13 **Fixed resistors**

C14 **Electrolytic and solid capacitors**

C15 **Ceramic capacitors**

C16 **Permanent magnet materials**

C17 **Stepping motors and associated electronics**

C18 **Direct current motors**

C19 **Piezoelectric ceramics**

C20 **Wire-wound components for TVs and monitors**

C21* **Assemblies for industrial use**
HNIL FZ/30 series, NORbits 60-, 61-, 90-series, input devices

C22 **Film capacitors**

* To be issued shortly.

GENERAL

PREFACE

All dimensions on drawings are in mm unless otherwise indicated. According to the S.I. units the symbol K (kelvin) is used instead of ^{o}C in combinations such as K/W. Also ΔT is in K. Atmospheric pressure is given in kPa instead of millibars, mm Hg etc. 1000 mbar = 100 kPa (= 1000 hPa).

For easy reference, type numbers (such as CP13) are at the top of each page. Order should, however, always state the 12-figure catalogue number.

Some devices are labelled "MAINTENANCE TYPE". These are available for equipment maintenance but no longer recommended for equipment production.

Devices labelled "OBSOLESCENT TYPE" are available until stocks are exhausted.

Besides the types mentioned in this book we may be able to supply special versions. In that respect your supplier should be consulted.

INTRODUCTION

There are two main styles in our range of potentiometers: **Preset** and **Control.**

Preset potentiometers (trimming potentiometers) are designed for eliminating circuit tolerances during the assembly of electronic equipment or the readjustment of electronic circuits at a later stage. The preset types are subdivided in **single** and **multiturn** potentiometers. The single turn range includes **cermet** and **carbon** versions, either **open** or **enclosed**. The multiturn range has **carbon** tracks.

Preset:

* CMP series; rectangular multiturn potentiometers designed for use in television tuners, dimensions approx. 42,5 x 8 x 5 mm
* CTP10 series; open carbon preset, 0,1 W, dimensions approx. 10 x 10 mm
* CTP14 series; open carbon preset, 0,2 W, dimensions approx. 14 x 17 mm
* CTP18 series; open carbon preset, 0,25 W, dimensions approx. 18 x 20 mm
* ECP10 series; enclosed carbon preset, 0,1 W, dimensions approx. 10 x 12 mm
* MTP10 series; open cermet preset, 0,5 W dimensions approx. 10 x 12 mm
* EMP10 series; enclosed cermet preset, 0,5 W, dimensions approx. 10 x 12 mm
* MFU series; focus potentiometers, dimensions approx. 29 x 58 mm

Control potentiometers are not designed for use as preset, trimming or similar purposes. They are widely used in all kinds of electronic equipment, e.g. for volume, tone, brightness and balance control. They are subdivided in **slide** and **rotary** potentiometers. The slide versions have a **carbon** track; the rotary versions **carbon, cermet** or **wirewound** resistance elements.

Control:

* CP13 series; carbon-knob potentiometers; 0,05 W, diameter approx. 13 mm
* CP16 series; carbon rotary, 0,1 W (lin) or 0,05 W (log), diameter approx. 16 mm, single and tandem types, with or without switch.
* CP23 series, carbon rotary, 0,25 W (lin) or 0,125 (log), diameter approx. 23 mm, single, without switch.
* MCP23 series; cermet rotary, 5 W, diameter approx. 23 mm, single without switch
* CSP25 series; carbon slide, 25 mm stroke, lin and log single types, dimensions approx. 43,5 x 9 x 5 mm
* CSP40 series; carbon slide, 40 mm stroke, single and tandem types, dimensions approx. 68 x 16 x 10,2 mm
* CSP60 series; carbon slide, 60 mm stroke, single and tandem types, dimensions approx. 87 x 16 x 10,2 mm
* PP12 series, modular carbon and cermet rotary potpack, single and tandem types, with or without switch, with or without spindle. Also dual types, dimensions approx. 12 x 13 mm
* PP17 series, modular carbon and cermet rotary potpack, single and tandem types with or without switch, with or without spindle. Also dual types, dimensions approx. 17 x 22 mm
* WP22/24 series, wirewound; single without switch, diameter approx. 23 mm

SEE ALSO TYPE SELECTION ON PAGE 8

TERMS AND DEFINITIONS

Preset potentiometers – Potentiometers of simple construction, either open or enclosed. Designed for a limited number of wiper movements, i.e. for trimming, adjusting or readjusting electronic circuits. Generally an adjusting tool is required. Important characteristics are precise adjustability (settability) and good stability of the set value.

Control potentiometers – Potentiometers of more complicated construction, with or without spindle (rotary types) or with slider (straight line action types). Mechanical and electrical design permit a large number of wiper movements.

Resistive element – The resistance element of a potentiometer.

Carbon potentiometers – Preset or control potentiometers comprising a resistive element of a special carbon composition, fixed to a resin bonded substrate.

Cermet potentiometers – Preset or control potentiometers comprising a metal-glaze resistive element on a ceramic substrate. Designed for high classed industrial applications.

Wirewound potentiometers – Control potentiometers comprising a layer of resistance wire or ribbon, wound on a substrate of insulating material.

Rotary type potentiometers – Preset or control potentiometers with a rotary action.

Slide carbon potentiometers – Slider type control potentiometers with a straight line action.

Single potentiometers – Control potentiometers comprising one resistive element.

Tandem potentiometers – Control potentiometers comprising two identical resistive elements, operated by one spindle or slider.

Dual potentiometers – Rotary type control potentiometers comprising two resistive elements, operated by separate concentric spindles.

Single turn potentiometers – Rotary type preset or control potentiometers with a mechanical angle of rotation smaller than 360°.

Multiturn potentiometers – Rotary type preset or control potentiometers with a rotary operation up to 40 rotations. Preset types comprise a straight line resistive element operated by knob or gear wheel. Control types comprise a reduction gear on the rotary action. Designed for fine resistance adjustment.

Modular potentiometers – Compact rectangular shaped rotary type control potentiometers, custom built from a number of basic elements, either with or without spindle or provided with a snap-in facility for customized operating devices.

Focus potentiometers – Special unit with or without V_{g2} control to adjust the focus voltage of picture tubes.
Connection is either by soldering or by conductive rubber.

Mains or battery switches – Rotary or push-pull switches fitted to the potentiometers and usually operated by the spindle.

Test switches – Separate switches for screwdriver or knob operation in testing procedures.

Bandswitches – For bandswitching, in combination with preset multiturn carbon potentiometers.

Wiper – Moving contact of rotary type potentiometers.

Slider – Moving contact of slider type potentiometers.

Resistance range – Range of maximum nominal resistances.

Rated resistance (R_r) – The resistance value marked upon the potentiometer.

Change of resistance – The irreversible change of resistance after a specified test, expressed as a percentage of the initial resistance.

Total resistance (R_{ac}) – The resistance measured between the end-terminals a and c (Fig. 1). Also R_{tot} or R_{total}.

Nominal resistance (R_{nom}) – Nominal value of the resistance between the end terminals a and c (Fig. 1), the moving contact b at end-stop position.

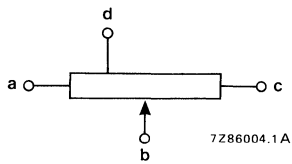

Fig. 1 Designation of terminals.

Resistance law – The relationship of the output ratio V_{ab}/V_{ac} to the mechanical position of the moving contact.

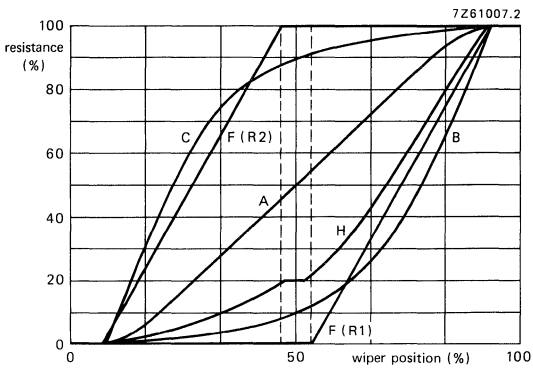

Fig. 2 Some typical resistance laws.

A = linear
B = logarithmic
C = inverse logarithmic
H = logarithmic with tap
F = balance

Terminal resistance – Minimum resistance which can be obtained between the termination connected to the moving contact b and any other termination. (Fig. 3).

Residual resistance – The resistance between either end termination a or c and the termination connected to the moving contact b when the moving contact is set against the relevant end stop. (Fig. 3).

Resistance at the tap – Minimum resistance between the tap terminal d and the resistive element.

Contact resistance CR – Resistance between resistive element and moving contact.

Contact resistance variation (CRV) – Change of resistance between the resistive element and the moving contact when it is moved at a defined speed, expressed as a percentage of R_{nom}.

Contact resistance moving (CRM) – Contact resistance when a moving contact is moved at a defined speed.

Maximum attenuation – Maximum value of the attenuation when the potentiometer is used as an attenuator (see Fig. 3).

Attenuation – The reciprocal of the output ratio, in dB.

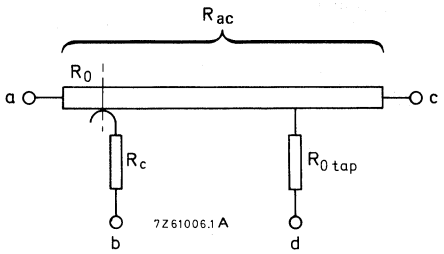

Fig. 3 Diagram of potentiometer; spindle in fully counter-clockwise position.

Residual resistance: $(R_o + R_c)\ \Omega$.

Maximum attenuation: $20 \log \frac{V_{ab}}{V_{ac}}$ dB.

(The value of R_c is negligible.)

Maximum dissipation (P_{max}) – Maximum amount of power which can be dissipated at a given ambient temperature, when the potentiometer is continuously loaded between the end terminals a and c (Fig. 1) and mounted on a steel panel of 100 x 100 x 1,5 mm by means of a nut (or on a printed circuit board for types with printed-wiring pins).

Maximum voltage (E_{max}) – The maximum voltage that may be applied is calculated from maximum dissipation (P_{max}) and nominal resistance (R_{nom}):
$E_{max} = \sqrt{P_{max} \times R_{nom}}$, provided that the limiting element voltage is not exceeded.

Limiting moving contact current – Maximum current that may be passed between resistance element and moving contact, usually expressed by $\sqrt{P_{max}/R_{nom}}$.

Insulation resistance – Resistance measured between interconnected terminals and all other external metal parts.

Test voltage – Voltage to be applied for one minute between interconnected terminals and other external metal parts.

Ganging tolerance – Maximum difference between the adjusted resistances of the two sections of a tandem potentiometer (expressed in dB).

Mechanical angle of rotation – The full extent of the travel of the actuating device of a rotary potentiometer between the end stops (Fig. 4).

Effective angle of rotation – That angle throughout which the resistance law of a rotary potentiometer is applicable (Fig. 4).

Switching angle – That angle over which the switch of a rotary potentiometer has to be actuated from the off to the on position, or vice versa (Fig. 4).

Backlash of the rotary switch – That angle over which the spindle of a rotary potentiometer has to be rotated before actuating the switch from the off to the on position (Fig. 4).

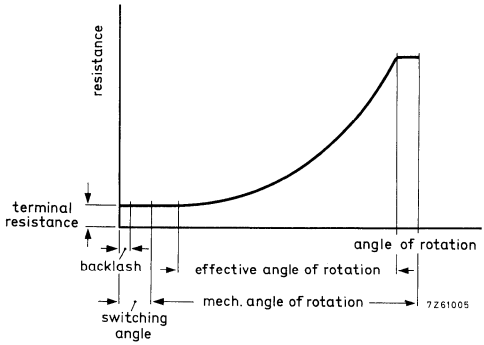

Fig. 4a.

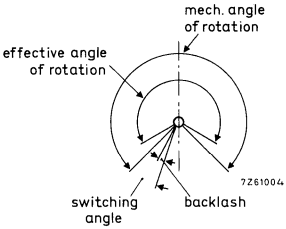

Fig. 4b.

Backlash of potentiometer with push-pull switch – That angle over which the spindle can be rotated before it causes any resistance change.

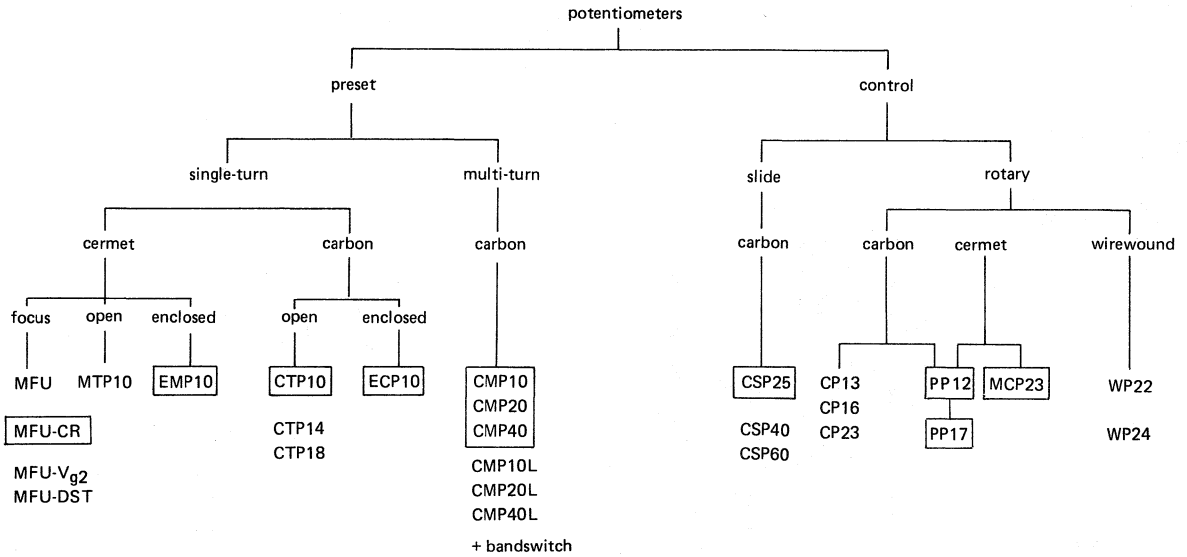

Preset potentiometers are mainly used for eliminating circuit tolerances during the assembly of electronic equipment or the readjustment of electronic circuits at a later stage.

Control potentiometers are widely used in all kinds of electronic equipment e.g. for volume, tone, brightness and tolerance control.

Preferred types are enclosed in the above selection scheme.

CONTROL POTENTIOMETERS

13 mm CARBON CONTROL POTENTIOMETERS

QUICK REFERENCE DATA

Resistance law	linear and logarithmic
Resistance values	4,7, 10 and 22 kΩ

GENERAL

These potentiometers are for use in miniaturized electronic equipment such as dictaphones, small radio sets, etc. On account of their application a special construction has been used, which makes mounting of a control knob superfluous.

The potentiometers can be fixed on a chassis with the supplied mounting nut, catalogue number 4322 047 09530.

Outlines

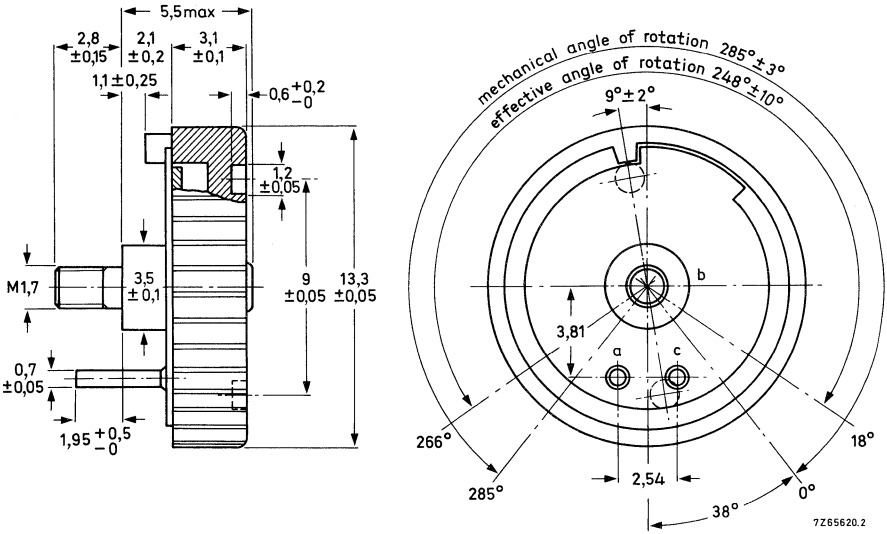

Fig. 1 a, b and c = potentiometer terminals (a and c are connected to the ends of the carbon track; b is connected to the wiper contact.)

TECHNICAL DATA

Nominal resistance	4,7, 10 and 22 kΩ
Tolerance on the nominal resistance	± 20%
Resistance law	linear and logarithmic
Contact resistance between carbon track and wiper	
linear law	⩽ 5% of R_{nom}
logarithmic law	⩽ 10% of R_{nom}
Terminal resistance	
linear law	⩽ 1% of R_{nom}
logarithmic law	⩽ 0,1% of R_{nom}
Insulation resistance	> 1 MΩ
Maximum attenuation	⩾ 60 dB
Maximum voltage over the resistance element	10 V (d.c.)
Current through wiper	⩽ 1 mA
Test voltage for 1 min	100 V, 50 Hz
Working temperature range	−10 to +70 °C
Effective angle of rotation	248 ± 10°
Mechanical angle of rotation	285 ± 3°
Operating torque	2 to 10 mNm
Maximum permissible torque with wiper at end stop	50 mNm
Life	in excess of 15 000 cycles

COMPOSITION OF THE CATALOGUE NUMBER

2322 440 100 . .

06 = 4,7 kΩ 07 = 10 kΩ 08 = 22 kΩ	linear law
26 = 4,7 kΩ 27 = 10 kΩ 28 = 22 kΩ	logarithmic law

16 mm CARBON CONTROL POTENTIOMETERS

QUICK REFERENCE DATA

Resistance range (E3 series)	
linear law	220 Ω to 4,7 MΩ
logarithmic law	1 kΩ to 2,2 MΩ
Maximum dissipation at 40 °C	
linear law	0,1 W
logarithmic law	0,05 W
Climatic category (IEC 68)	10/070/21

DESCRIPTION

The CP16 carbon control potentiometer series includes two types:

- single potentiometers, for general purposes,
- tandem potentiometers, for stereophonic purposes.

The single potentiometers comprise a carbon track, which is fitted on to a base plate of resin-bonded paper and housed in a metal case. The terminals a and c (see Types) are connected to the ends of the carbon track; terminal b is connected via a contact ring to the wiper contact. The potentiometers can be supplied with a tap (d) at 46% (single) or 50% (tandem) of the total mechanical angle of rotation. The potentiometers are provided with plastic or metal spindles.

The tandem potentiometers are composed of two carbon tracks, on base plates of resin-bonded paper, in one housing. The base plates are placed in such a way that the tracks are opposite each other.

The single potentiometers can be delivered without switch or with a rotary switch; the tandem potentiometers are only supplied without switch. Both types are available with different connecting terminals, mounting facilities and spindles, see below.

Versions with switch are maintenance types.

Types

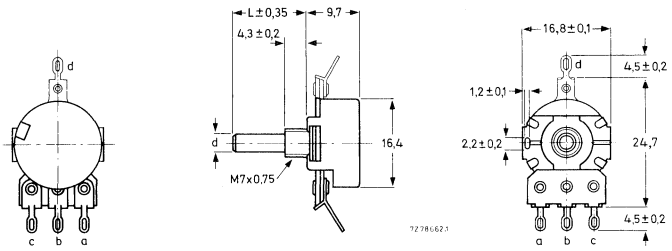

Fig. 1 Single potentiometer with mounting bushing. For dimensions d and L, see Spindles.

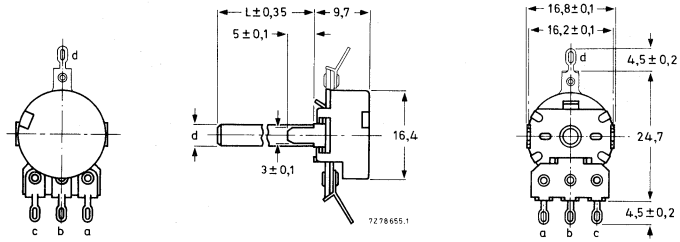

Fig. 2
Single potentiometer with twist tags. For dimensions d and L, see Spindles.

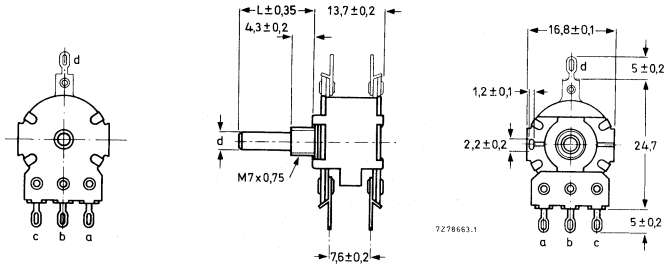

Fig. 3
Tandem potentiometer. For dimensions d and L, see Spindles.

→ **Switches** (maintenance types)

Single-pole, single-throw, rotary switch (s.p.s.t.).

Fig. 4a Circuit in off-position of spindle (spindle turned fully counter-clockwise).

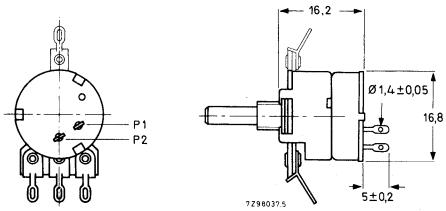

Fig. 4b Single potentiometer with s.p.s.t. rotary switch (spring actuated).

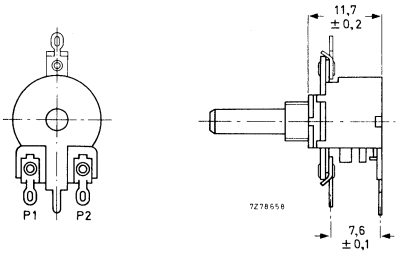

Fig. 4c Single potentiometer with s.p.s.t. rotary switch (direct operating).

Connecting terminals

Fig. 5 Solder tags.

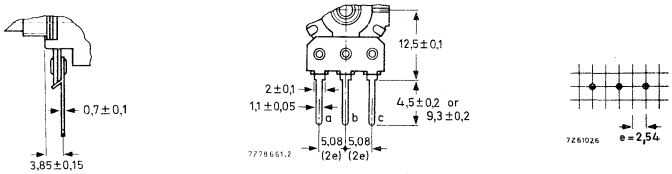

Fig. 6 Long or short printed-wiring pins (single potentiometer).

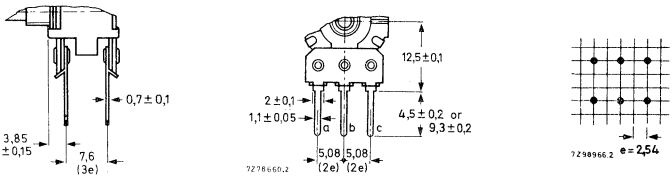

Fig. 7 Long or short printed-wiring pins (tandem potentiometer).

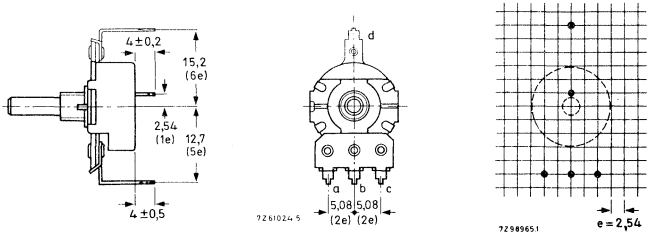

Fig. 8 Printed-wiring pins, bent backwards.

Spindles

type	off position	L mm	L_1 mm	material
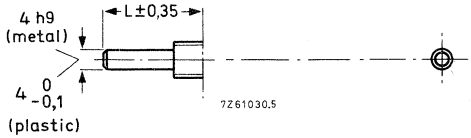		10 12 15 17 19 20 22 24 25 28 30		metal or plastic
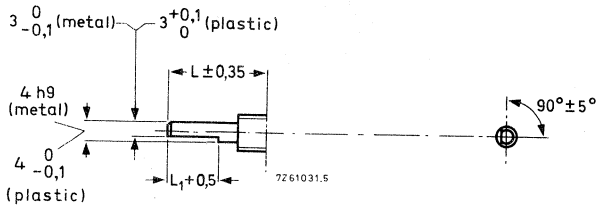		10 15 20 20	3,5 8,5 8,5 13,5	metal or plastic
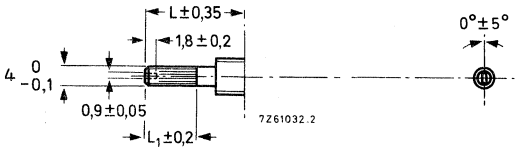		10 15 20	5 9 9	plastic
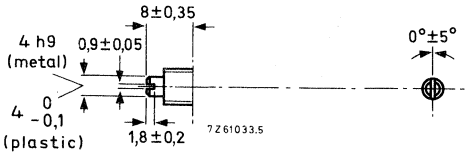				metal or plastic

Mounting facilities

		required mounting holes in chassis	fixing of potentiometer
mounting bushing M7 x 0,75	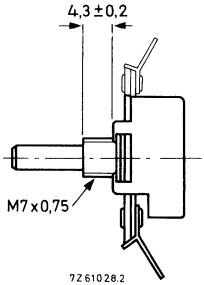	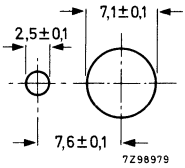	with supplied mounting nut;* max. torque for tightening = 1 Nm; min. thickness of chassis = 1 mm
twist tags	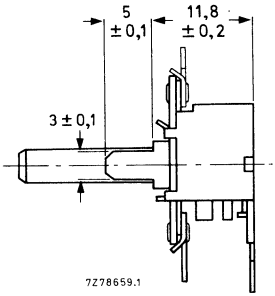	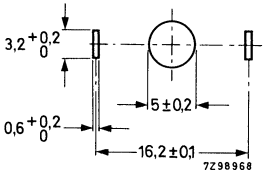	by twisting the tags

MARKING

The potentiometers are marked with nominal resistance, resistance law, period and year of manufacture.

* Catalogue number of mounting nut: 4322 047 00370.

TECHNICAL DATA

Unless otherwise specified, all values have been determined at an ambient temperature of 15 to 35 °C, at atmospheric pressure of 96 to 106 kPa and a relative humidity of 45 to 75%.
For measuring methods, see IEC publications 190 and 68.

nominal resistance R_{nom}*	resistance law according to Figs 9 and 10	max. voltage at 40 °C V	max. terminal resistance	max. attenuation dB	max. contact resistance % R_{nom}	limiting wiper current at 40 °C mA
220 Ω	a	4,7	10 Ω	–	4	21
470 Ω	a	6,8	10 Ω	–	4	14,5
1 kΩ	a	10	25 Ω	–	4	10
2,2 kΩ	a	14	25 Ω	–	4	7
4,7 kΩ	a	22	25 Ω	–	4	5
10 kΩ	a	31	35 Ω	–	4	3,2
22 kΩ	a	45	35 Ω	–	4	2,2
47 kΩ	a	70	35 Ω	–	4	1,5
100 kΩ	a	100	100 Ω	–	4	1,0
220 kΩ	a	140	125 Ω	–	4	0,7
470 kΩ	a	220	250 Ω	–	4	0,5
1 MΩ	a	310	1 kΩ	–	4	0,32
2,2 MΩ	a	460	2 kΩ	–	4	0,22
4,7 MΩ	a	500	5 kΩ	–	4	0,14
1 kΩ	b	7	5 Ω	50	6	7
2,2 kΩ	b	10	5 Ω	50	6	5
4,7 kΩ	b	15	5 Ω	60	6	3,2
10 kΩ	b	22	10 Ω	60	6	2,2
22 kΩ	b	31	20 Ω	60	6	1,5
47 kΩ	b	50	35 Ω ▲	60 ▲	6	1,0
100 kΩ	b	70	50 Ω	70	6	0,7
220 kΩ	b	100	50 Ω	80	6	0,5
470 kΩ	b	155	100 Ω	80	6	0,32
1 MΩ	b	220	200 Ω	80	6	0,22
2,2 MΩ	b	310	500 Ω	80	6	0,15

* Measured between terminals a and c; for potentiometers with a tap, between terminals a and d and between c and d.

▲ Measured between terminals a and b; spindle turned fully counter-clockwise.

nominal resistance R_{nom}*	resistance law according to Figs 9 and 10	max. voltage at 40 °C V	max. terminal resistance	max. attenuation dB	max. contact resistance % R_{nom}	limiting wiper current at 40 °C mA
1 kΩ	c	7	20 Ω	50	6	7
2,2 kΩ	c	10	40 Ω	50	6	5
4,7 kΩ	c	15	100 Ω	60	6	3,2
10 kΩ	c	22	200 Ω	60	6	2,2
22 kΩ	c	31	250 Ω	60	6	1,5
47 kΩ	c	50	500 Ω †	60 †	6	1,0
100 kΩ	c	70	2 kΩ	70	6	0,7
220 kΩ	c	100	2,5 kΩ	80	6	0,5
470 kΩ	c	155	5 kΩ	80	6	0,32
1 MΩ	c	220	10 kΩ	80	6	0,22
2,2 MΩ	c	310	20 kΩ	80	6	0,15
5 + 42 kΩ	d	50	40 Ω	60	6	1,0
20 + 200 kΩ	d	100	50 Ω	80	6	0,5
50 + 420 kΩ	d	155	470 Ω ▲	80 ▲	6	0,32
100 + 900 kΩ	d	220	200 Ω	80	6	0,22
2 + 8 kΩ	e	22	10 Ω	60	6	2,2
5 + 17 kΩ	e	31	22 Ω	60	6	1,5
10 + 37 kΩ	e	50	47 Ω	60	6	1,0
20 + 80 kΩ	e	70	100 Ω ▲	70 ▲	6	0,7
50 + 170 kΩ	e	100	220 Ω	80	6	0,5
100 + 370 kΩ	e	155	600 Ω	80	6	0,32
0,5 + 1,7 MΩ	e	310	2,2 kΩ	80	6	0,15
10 kΩ	f	15	–	–	6	2,2
22 kΩ	f	22	–	–	6	1,5
47 kΩ	f	35	–	–	6	1,0
100 kΩ	f	50	–	–	6	0,7
220 kΩ	f	70	–	–	6	0,5
470 kΩ	f	110	–	–	6	0,32
1 MΩ	f	155	–	–	6	0,22

* Measured between terminals a and c; for potentiometers with a tap, between terminals a and d and between c and d.

† Measured between terminals c and b; spindle turned fully clockwise.

▲ Measured between terminals a and b; spindle turned fully counter-clockwise.

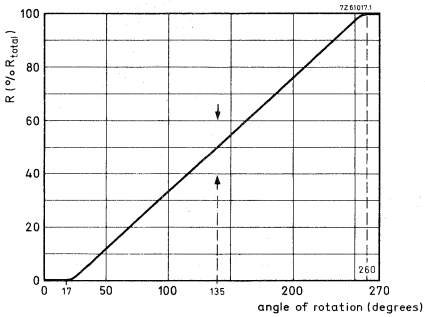

Fig. 9a Linear law, single potentiometers.

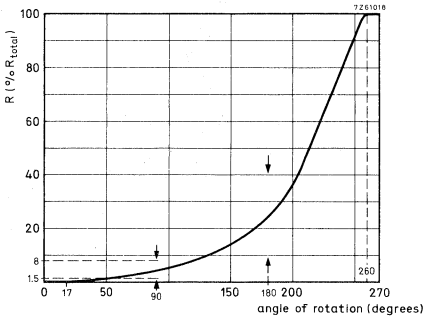

Fig. 9b Logarithmic law, single potentiometers.

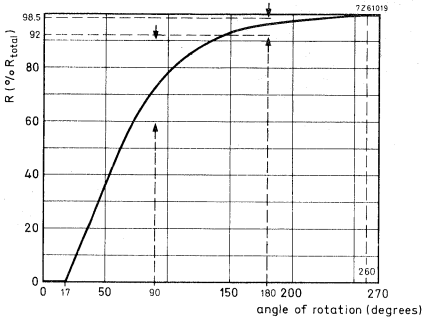

Fig. 9c Reversed logarithmic law, single potentiometers.

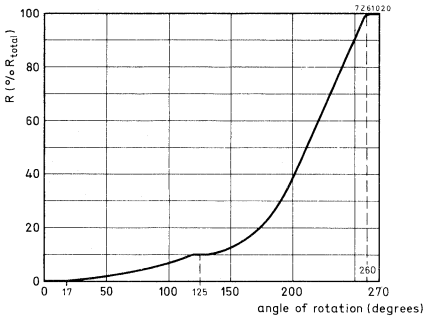

Fig. 9d Semi-logarithmic law, tap at 10%, single potentiometers.

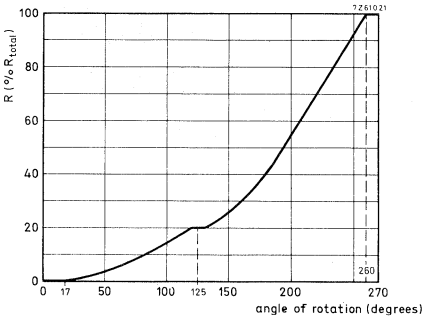

Fig. 9e Semi-logarithmic law, tap at 20%, single potentiometers.

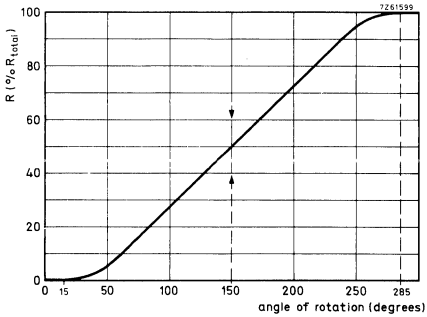

Fig. 10a Linear law, tandem potentiometers.

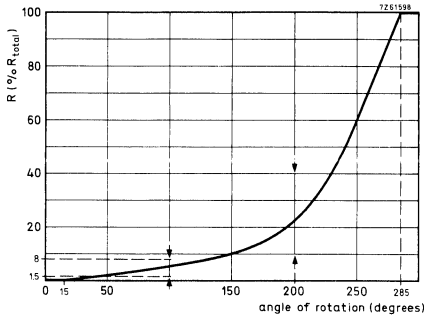

Fig. 10b Logarithmic law, tandem potentiometers.

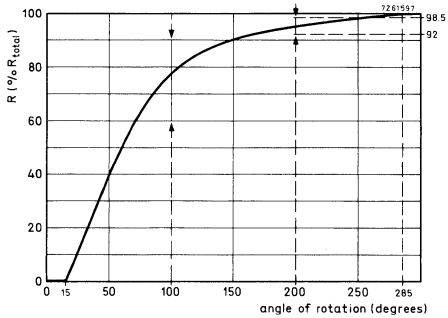

Fig. 10c Reversed logarithmic law, tandem potentiometers.

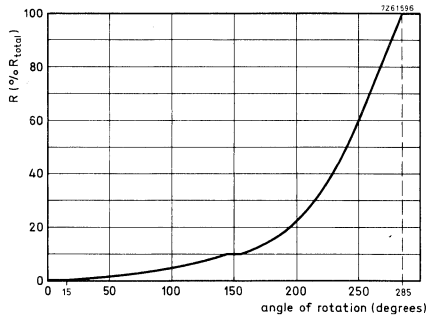

Fig. 10d Logarithmic law, tap at 10% tandem potentiometers.

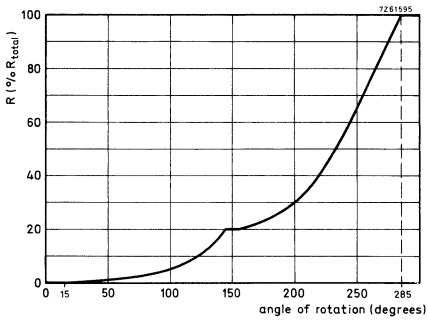

Fig. 10e Logarithmic law, tap at 20%, tandem potentiometers.

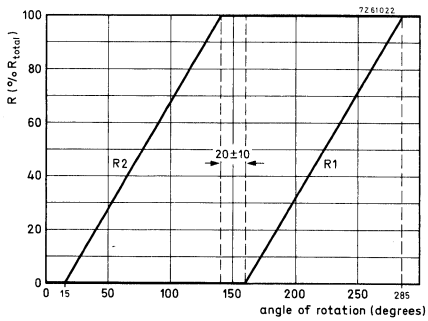

Fig. 10f Balance potentiometers.

Tolerance on the nominal resistance	± 20% (note 1)	
Resistance law and tolerances	see Figs 9 and 10	
Ganging tolerance (note 2)		
linear law		
at values between 10 and 90% of R_{total}	< 2 dB	
(reversed) logarithmic law		
at attenuations between 0 and –20 dB	< 2 dB	
at attenuations between –20 and –30 dB	< 3 dB	
at attenuations between –30 and –40 dB	< 4 dB	
with a tap		
at attenuations between 0 and –20 dB	< 2 dB	
at attenuations between –20 and –30 dB	< 3 dB	
at attenuations between –30 and –34 dB	< 4 dB	
Minimum resistance at the tap	⩽ 1,5% of R_{nom}	
Insulation resistance,		
initially	> 1000 MΩ	
after damp heat test (IEC 68, test C, 21 days)	> 25 MΩ	
Maximum dissipation at 40 °C		
linear law, acc. to Figs 9a, 10a	0,1 W	
resistance law, acc. to Figs 9b(10b) to 9e(10f)	0,05 W	
Test voltage	1000 V, 50 Hz	
Working temperature range	–10 to +70 °C	
Storage temperature range	–25 to +70 °C	
Category (IEC 68)	10/070/21	
Operating torque	5 to 20 mNm	
Permissible torque with wiper at end stop	plastic	metal
plain spindles	⩽ 500 mNm	⩽ 600 mNm
spindles with flat face	⩽ 400 mNm	⩽ 600 mNm
spindles with screwdriver slot	⩽ 250 mNm	⩽ 600 mNm
Permissible axial spindle load		
single potentiometers	⩽ 100 N } pull	⩽ 100 N } push
tandem potentiometers	⩽ 100 N } pull	⩽ 60 N } push
Axial spindle play	< 0,8 mm	
Radial spindle play, measured with 2,5 N		
at 10 mm from the mounting plane		
potentiometers with mounting bushing	⩽ 0,2 mm	
potentiometers with twist tags	⩽ 0,5 mm	
Effective angle of rotation		
single	235 – 250°	
tandem	265 – 275°	
balance	range of balance, half the effective angle of rotation: 20 ± 10° R_2: 125 ± 10° (counter-clockwise) R_1: 125 ± 10° (clockwise)	

1. For potentiometers with a tap the tolerance on R_{ad} as well as R_{dc} = ± 20%.
2. For tandem potentiometers only.

Mechanical angle of rotation single potentiometers	
without switch	270 ± 5°
with switch	292 ± 5°
tandem potentiometers	300 ± 5°
Life	after 10 000 cycles ΔR_{ac} < 25% of R_{ac}

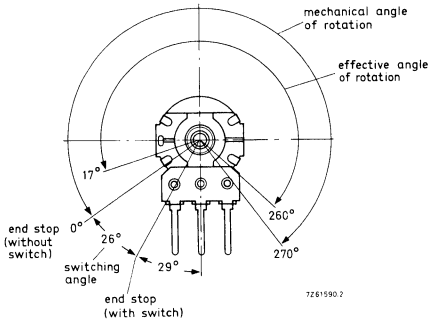

Fig. 11a Angles of rotation of single potentiometers with or without switch.

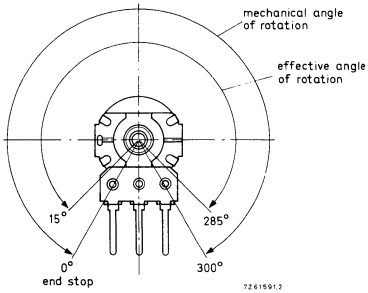

Fig. 11b Angles of rotation of tandem potentiometers.

	switch type	
	s.p.s.t. rotary spring actuated	s.p.s.t. rotary direct operating
Breaking capacity	12 V d.c., 2 A	12 V d.c., 2 A
Contact resistance, initially after 10 000 on-off switching operations at breaking capacity	< 10 mΩ < 50 mΩ*	< 10 mΩ < 50 mΩ*
Insulation resistance** initially after damp heat test (IEC 68, test Ca, 21 days)	> 10 MΩ > 2 MΩ	> 10 MΩ > 2 MΩ
Test voltage for 1 min**, initially after damp heat test (IEC 68, test Ca, 21 days)	500 V (d.c.) 100 V (d.c.)	500 V (d.c.) 100 V (d.c.)
Switching torque	15 to 40 mNm	12 to 30 mNm
Switching angle	26 ± 2°	26 ± 2°
Total mechanical angle of rotation	295 ± 5°	295 ± 5°
Backlash	⩽ 10°	⩽ 10°
Permissible axial spindle load	⩽ 100 N	⩽ 100 N

* Averaged over 10 measurements: < 25 mΩ.

** Measured between the terminals, and between interconnected terminals and the case or other metal parts.

COMPOSITION OF THE CATALOGUE NUMBER

2322 . . . . . .

code for type and switch

without switch	single	= 380
	tandem	= 390
single, with s.p.s.t. rotary switch (spring actuated)*		= 381
single, with s.p.s.t. rotary switch (direct operating)		= 387
single, without switch, with p.w. pins bent backwards**		= 389

* Only available with mounting bushing.
** Only available with mounting bushing and p.w. pins of 9,3 mm length.

code for terminals, mounting facility, spindle type and length

solder tags				p.w. pins, length 4,5 mm				p.w. pins, length 9,3 mm			
mounting bushing		twist tags		mounting bushing		twist tags		mounting bushing		twist tags	
metal spindle	plastic spindle	metal spindle	plastic spindle	metal spindle	plastic spindle	metal spindle	plastic spindle	metal spindle	plastic spindle	metal spindle	plastic spindle
0 . .	7 . .	2 . .	4 . .	0 . .	7 . .	2 . .	4 . .	1 . .	6 . .	3 . .	5 . .

solder tags

plain:
- 10 mm = . 11
- 12 mm = . 09
- 15 mm = . 12
- 17 mm = . 13
- 19 mm = . 14
- 20 mm = . 15
- 22 mm = . 17
- 24 mm = . 19
- 25 mm = . 01
- 28 mm = . 02
- 30 mm = . 03

with flat face:
- 10 (L_1 = 3,5) mm = . 42
- 15 (L_1 = 8,5) mm = . 44
- 20 (L_1 = 8,5) mm = . 45
- 20 (L_1 = 13,5) mm = . 46

knurled (only plastic):
- 10 mm = . 26
- 15 mm = . 27
- 20 mm = . 28

with screwdriver slot = . 10

p.w. pins, length 4,5 mm / p.w. pins, length 9,3 mm

plain:
- 10 mm = . 61
- 12 mm = . 59
- 15 mm = . 62
- 17 mm = . 63
- 19 mm = . 64
- 20 mm = . 65
- 22 mm = . 67
- 24 mm = . 69
- 25 mm = . 51
- 28 mm = . 52
- 30 mm = . 53

with flat face:
- 10 (L_1 = 3,5) mm = . 92
- 15 (L_1 = 8,5) mm = . 94
- 20 (L_1 = 8,5) mm = . 95
- 20 (L_1 = 13,5) mm = . 96

knurled (only plastic):
- 10 mm = . 76
- 15 mm = . 77
- 20 mm = . 78

with screwdriver slot = . 60

nominal resistance	code in catalogue number			
	linear law Fig. 9a, 10a	log. law Fig. 9b, 10b	rev. log. law Figs 9c, 10c	balance * Fig. 10f
220 Ω	02			
470 Ω	03			
1 kΩ	04	24	44	
2,2 kΩ	05	25	45	
4,7 kΩ	06	26	46	
10 kΩ	07	27	47	91
22 kΩ	08	28	48	92
47 kΩ	09	29	49	93
100 kΩ	11	31	51	94
220 kΩ	12	32	52	95
470 kΩ	13	33	53	96
1 MΩ	14	34	54	97
2,2 MΩ	15	35	55	
4,7 MΩ	16			

nominal resistance	code in catalogue number	
	log. law tap at 10% Figs 9d, 10d	log. law tap at 20% Figs 9e, 10e
5 + 42 kΩ	72	
20 + 200 kΩ	67	
50 + 420 kΩ	73	
100 + 900 kΩ	64	
2 + 8 kΩ		76
5 + 17 kΩ		82
10 + 37 kΩ		86
20 + 80 kΩ		77
50 + 170 kΩ		83
100 + 370 kΩ		87
0,5 + 1,7 MΩ		84

Notes

Detent potentiometers (11 click, 41 click and centre click versions), without switch, can be supplied on request.
Versions with switch are maintenance types.

* Only for tandem potentiometers.

23mm CARBON CONTROL POTENTIOMETERS

QUICK REFERENCE DATA

Resistance range (E3 series)	
linear law	220 Ω to 4,7 MΩ
logarithmic law	1 kΩ to 4,7 MΩ
Maximum dissipation at 40 °C	
linear law	0,25 W
logarithmic law	0,125 W
Climatic category (IEC 68)	10/070/21

APPLICATION

The potentiometers are widely used in electronic equipment.

DESCRIPTION

The CP23 carbon control potentiometer series includes single potentiometers without switch. The potentiometers comprise a carbon track, which is fitted on to a base plate of resin bonded paper and housed in a metal case. The terminals a and c (see Types) are connected to the ends of the carbon track; terminal b is connected via a contact ring to the wiper contact. The material of the spindle is plastic. The potentiometers are provided with solder tag terminals.

MARKING

The potentiometers are marked with nominal resistance, resistance law, period and year of manufacture.

Types

For dimensions d, L and L1, see Spindles.

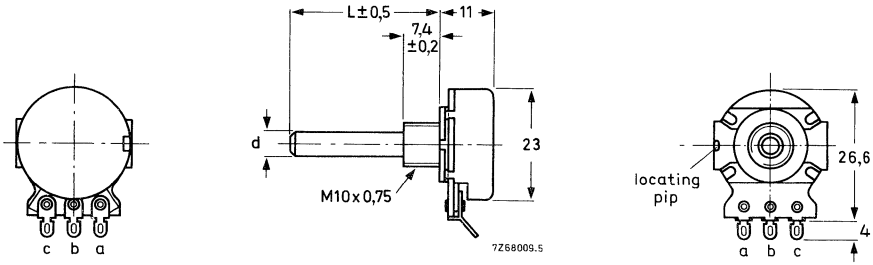

Fig. 1 Single potentiometer.

Mounting facilities

method	required mounting holes in chassis	fixing of potentiometer
mounting bushing M10 x 0,75		with supplied mounting nut (catalogue number 4322 047 00350) max. torque for tightening = 3,5 Nm; min. thickness of chassis = 1,5 mm

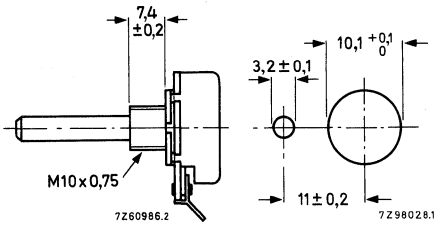

Fig. 2.

Connecting terminals

solder tags

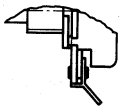

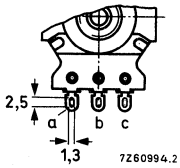

Fig. 3.

Spindles

type	"off position"	L mm	L_1 mm
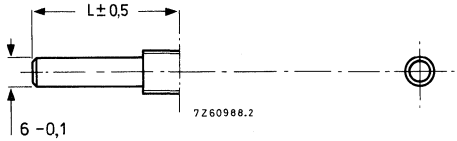		17	–
		18	8,5
		19	–
		20	–
		22	–
		25	13,5
		30	–
		35	–
		40	13,5
		60	13,5
		70	–
		90	–

Fig. 4.

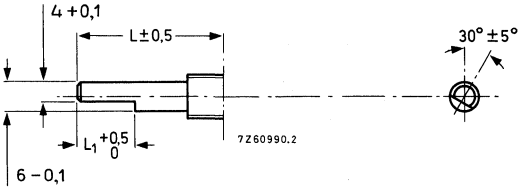

Fig. 5.

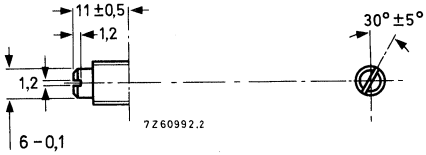

Fig. 6.

TECHNICAL DATA

Unless otherwise specified, all values have been determined at an ambient temperature of 15 to 35 °C, an atmospheric pressure of 86 to 106 kPa and a relative humidity of 45 to 75%.

For measuring methods, see IEC publications 190 and 68.

nominal resistance R_{nom}*	resistance law according to Fig. 7.	max. voltage (V) at 40 °C	max. voltage (V) at 70 °C	max. terminal resistance	max. attenuation dB	max. contact resist. % R_{nom}	limiting wiper current at 40 °C mA
220 Ω	a	7,4	5,7	10 Ω	–	3	40
330 Ω	a	8,7	6,7	10 Ω	–	3	30
470 Ω	a	11	8,4	10 Ω	–	3	22
1 kΩ	a	16	12	25 Ω	–	3	16
2,2 kΩ	a	23	18	25 Ω	–	3	11
4,7 kΩ	a	34	26	25 Ω	–	3	7
10 kΩ	a	50	39	35 Ω	–	2,5	5
22 kΩ	a	74	57	35 Ω	–	2,5	3,5
47 kΩ	a	110	84	35 Ω	–	2,5	2,2
100 kΩ	a	160	120	100 Ω	–	2,5	1,4
220 kΩ	a	230	180	125 Ω	–	2,5	1,0
470 kΩ	a	340	265	250 Ω	–	2,5	0,65
1 kΩ	a	500	390	1 kΩ	–	2,5	0,45
2,2 MΩ	a	500	500	2,2 kΩ	–	2,5	0,32
4,7 MΩ	a	500	500	4,7 kΩ	–	2,5	0,22
470 Ω	b	8,4	6,9	5 Ω	–	6	14
1 kΩ	b	12	10	5 Ω	50	4	10
2,2 kΩ	b	18	15	5 Ω	60	4	7
4,7 kΩ	b	26	22	5 Ω	60	4	4,5
10 kΩ	b	39	32	10 Ω	60	4	3,2
22 kΩ	b	57	47	22 Ω	60	4	2,2
47 kΩ	b	84	69	35 Ω ▲	70 ▲	4	1,4
100 kΩ	b	120	100	50 Ω	70	4	1,0
220 kΩ	b	180	150	50 Ω	80	4	0,7
470 kΩ	b	265	220	100 Ω	80	4	0,45
1 MΩ	b	390	320	500 Ω	80	4	0,32
2,2 MΩ	b	500	470	2,2 kΩ	80	4	0,22

* Measured between terminals a and c.

▲ Measured between terminals a and b; spindle turned fully counter-clockwise.

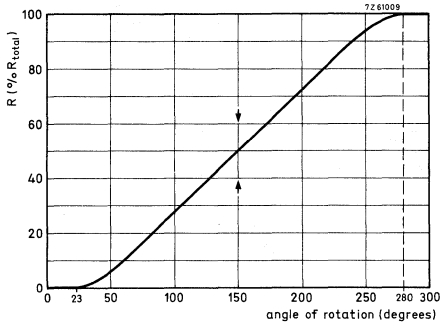

Fig. 7a Linear law.

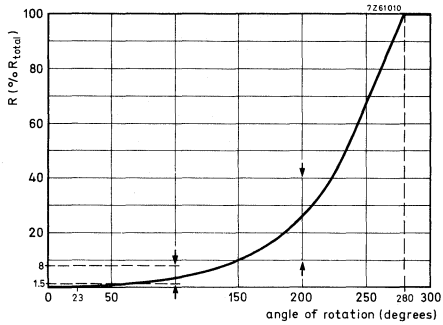

Fig. 7b Logarithmic law.

Tolerance on the nominal resistance	± 20%
Resistance law and tolerances	see Figs 7a and 7b
Minimum resistance at the tap	⩽ 1% of R_{nom}
Insulation resistance after damp heat test (IEC 68, test C, 21 days)	> 100 MΩ
Maximum dissipation	
linear law, acc. to Fig. 7a	
at 40 °C	0,25 W
at 70 °C	0,125 W
resistance law, acc. to Fig. 7b	
at 40 °C	0,125 W
at 70 °C	0,0625 W
Test voltage	1000 V, 50 Hz
Working temperature range	−10 to + 70 °C
Category (IEC 68)	10/070/21
Operating torque	3 to 20 mNm
Permissible torque with wiper at end stop	⩽ 0,8 Nm
Permissible axial spindle load	⩽ 100 N
Effective angle of rotation	250-265°
Mechanical angle of rotation	300 ± 5°
Life, $\Delta R_{ac}/R_{ac}$	after 10 000 rotations < 25%

COMPOSITION OF THE CATALOGUE NUMBER

2322 350 7 . . . .

code for type, and length of spindle

slotted = .10

plain	flat faced
17 mm = 13	18 mm = .40
18 mm = 06	25 mm = .41
19 mm = 14	30 mm = .43
20 mm = 15	40 mm = .45
22 mm = 17	60 mm = .47
25 mm = 01	
30 mm = 03	
35 mm = 04	
40 mm = 05	
60 mm = 07	
70 mm = 08	
90 mm = 09	

code for resistance law and nominal resistance

nominal resistance		lin law	log law
220 Ω	=	02	
330 Ω	=	19	
470 Ω	=	03	23
1 kΩ	=	04	24
2,2 kΩ	=	05	25
4,7 kΩ	=	06	26
10 kΩ	=	07	27
22 kΩ	=	08	28
47 kΩ	=	09	29
100 kΩ	=	11	31
220 kΩ	=	12	32
470 kΩ	=	13	33
1 MΩ	=	14	34
2,2 MΩ	=	15	35
4,7 MΩ	=	16	

MODULAR CARBON AND CERMET POTENTIOMETERS

The PP12 series includes resistance elements (linear and logarithmic), battery switches, drive units, mounting brackets, detents, and shielding, which can be efficiently assembled to customer's order to form an almost infinite variety of carbon and cermet control potentiometers*.
All types of these rectangular potentiometers are custom built from standard stock parts and are therefore available within comparitively short delivery times. The surveys on the following pages show the most probable combinations of items. The various modular elements are then described, and the electrical and mechanical details of complete units are given. The resistance elements can also be supplied separately.

QUICK REFERENCE DATA

Resistance range (E3 series)	
carbon, linear law	470 Ω to 1 MΩ
carbon, logarithmic law*	2,2 kΩ to 470 kΩ
cermet, linear law	470 Ω to 4,7 MΩ
Maximum dissipation at T_{amb} = 40 °C	
carbon, linear law	0,2 W
carbon, logarithmic law	0,1 W
cermet, linear law	1 to 3 W
Climatic category (IEC 68)	
carbon	25/070/10
cermet, versions with metal spindle	t.b.f.
cermet, versions with plastic spindle or without spindle	t.b.f.

DESCRIPTION

The potentiometer family can be divided into two groups:
– versions without spindle, to be activated by snap-in devices of customer (survey 1);
– versions with one of many available spindle types (survey 2);

All versions have the same type of resistance element (carbon or cermet).

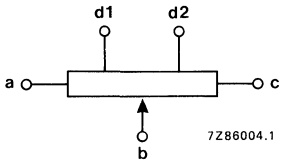

The resistance element is a carbon track on a phenolic paper base, or a metal-glass track on a ceramic Al_2O_3 base, fixed in a plastic housing. The metallic slider has a multi-finger wiper and is mounted in a plastic rotor. Terminals are designated as shown above in accordance with IEC 393-1, sub-clause 4.5.

* The availability of **cermet** versions is still restricted; not all types can be supplied yet.

SURVEY 1, VERSIONS WITHOUT SPINDLE

				single vertical		single horizontal
versions				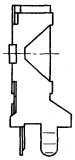 with bracket	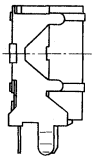 with bracket and battery switch	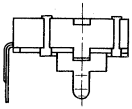
rotor		snap-in		●	X	●
terminal configuration		in-line		●	X	●
type of terminal	vertical versions	spindle height	10 mm	X	X	
			12,5 mm	●	X	
		solder tag				
	horizontal versions					●
detent		none		●		●
		at 50%		X		X

X = available.
● = preferred.

	tandem vertical		dual vertical
	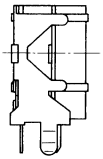 with bracket	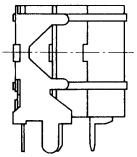 with bracket and battery switch	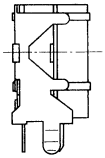
	•	•	•
	•	•	•
	X	X	X
	•	•	•
	•	•	•
	X	X	X

SURVEY 2, VERSIONS WITH SPINDLE

				single vertical		single horizontal
version				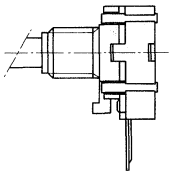	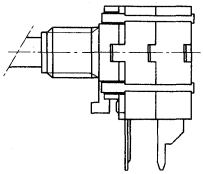 with battery switch	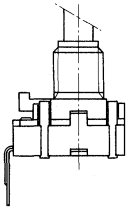
bushing L = 8 mm	M7	spindle dia. 4 mm	plastic	●	●	●
			metal	●	●	●
		spindle dia. 6 mm	plastic	X	X	X
			metal	X	X	X
type of terminal	vertical versions	spindle height	12,5 mm	●	●	
			10 mm	X	X	
		solder tag		X	X	
	horizontal version					●
optional	bracket			X	X	X
	centre detent (3)			X		X

X = available.
● = preferred.

	tandem vertical		dual vertical
	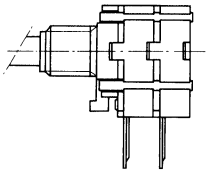	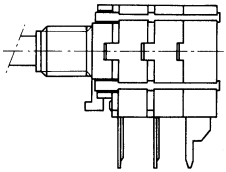 with battery switch	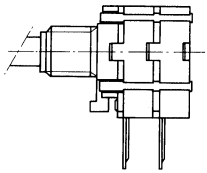
	●	X	
	●	X	X
	X	X	
	X	X	X
	●	●	●
	X	X	X
	X		X
	X		X

VERSION WITHOUT SPINDLE, SINGLE VERTICAL WITH BRACKET

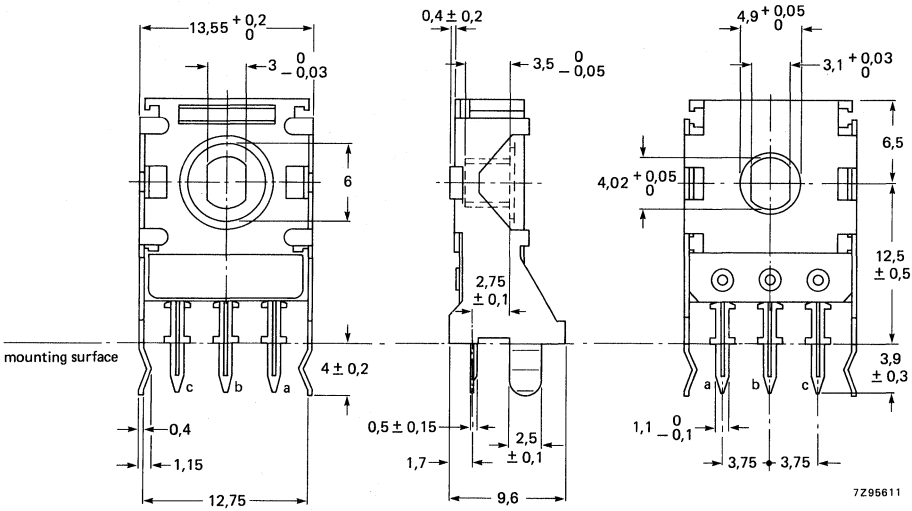

Rotor drawn at mid position long p.w. tags.

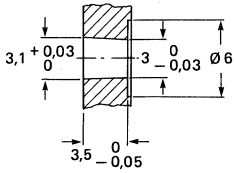

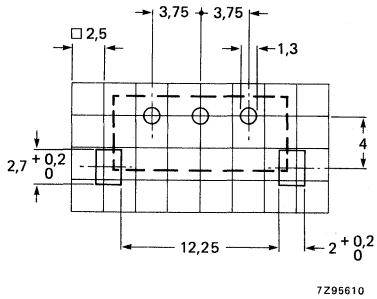

Hole pattern in printed wiring board, viewed from component side.

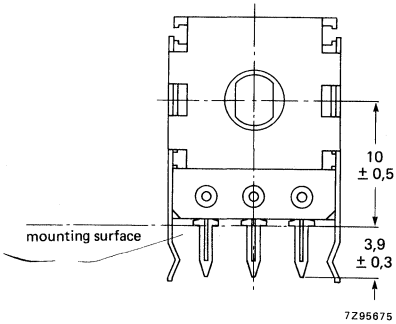

Version with spindle height of 10 mm, short p.w. tags.

Fig. 1.

For version with tap see Fig. 13.

DEVELOPMENT DATA

Main properties

Climatic category (IEC 68)	carbon 25/070/10, cermet 25/070/56
Resistance range, E3 series	
carbon, linear	470 Ω to 1,0 MΩ tolerance 20%
carbon, non-linear	2,2 kΩ to 470 kΩ tolerance 20%
cermet, linear	470 Ω to 4,7 MΩ tolerance 10%
Resistance law (see Fig. 19)	carbon A, B, C cermet A
Maximum dissipation at T_{amb} = 40 °C	
carbon, linear	0,2 W
carbon, non-linear	0,1 W
cermet, linear	1,0 W
Test voltage for 1 minute	350 V, 50 Hz 500 V (d.c.)

For further information see Electrical Data and Mechanical Data.

Composition of the catalogue number, PP12 without spindle, single, vertical

2322 5.5 00 . . .

- code for element
  - 0 = carbon
  - 1 = certmet
- code for tags and detent
  - 0 = short p.w. tags, no detent
  - 1 = long p.w. tags, no detent
  - 5 = short p.w. tags, detent 50%
  - 6 = long p.w. tags, detent 50%
- resistance code
- Table for R_{nom}

R \ law	linear	logarithmic *	rev. logarithmic*
470 Ω	03	–	–
1 kΩ	04	–	–
2,2 kΩ	05	25	45
4,7 kΩ	06	26	46
10 kΩ	07	27	47
22 kΩ	08	28	48
47 kΩ	09	29	49
100 kΩ	11	31	51
220 kΩ	12	32	52
470 kΩ	13	33	53
1 MΩ	14	–	–
2,2 MΩ**	15	–	–
4,7 MΩ**	16	–	–

* carbon only.
** cermet only.

Catalogue numbers for other versions on request.

VERSION WITHOUT SPINDLE, SINGLE VERTICAL WITH BATTERY SWITCH

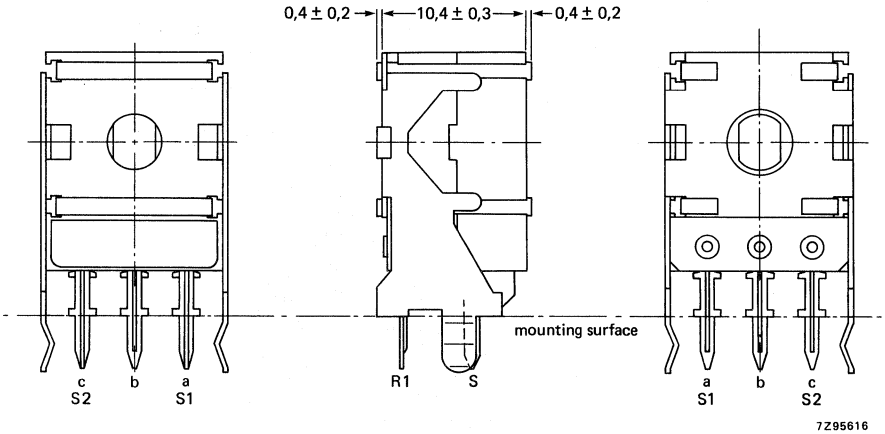

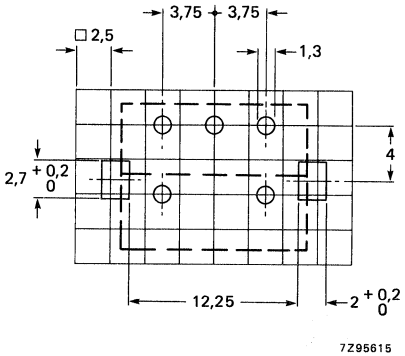

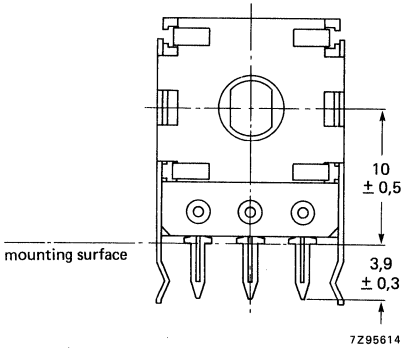

Hole pattern in printed wiring board, viewed from component side.

Fig. 2.

For other dimensions see version without spindle, single vertical with bracket.

DEVELOPMENT DATA

Main properties

Climatic category (IEC 68)	carbon 25/070/10, cermet 25/070/56
Resistance range, E3 series	
carbon, linear	470 Ω to 1,0 MΩ, tolerance 20%
carbon, non-linear	2200 Ω to 470 kΩ, tolerance 20%
cermet, linear	470 Ω to 4,7 MΩ, tolerance 10%
Resistance law (see Fig. 19)	carbon A, B, C cermet A
Maximum dissipation at T_{amb} = 40 °C	
carbon, linear	0,2 W
carbon, non-linear	0,1 W
cermet, linear	1,0 W
Test voltage for 1 minute	350 V, 50 Hz

For further information see Electrical Data, Mechanical Data and Battery Switch.

Composition of the catalogue number, PP12 without spindle, single, vertical with switch

2322 5.5 10 . . .

code for element
0 = carbon
1 = cermet

code for tags and detent
0 = short p.w. tags, no detent
1 = long p.w. tags, no detent
5 = short p.w. tags, detent 50%
6 = long p.w. tags, detent 50%

resistance code

Table for R_{nom}

R \ law	linear	logarithmic*	rev. logarithmic*
470 Ω	03	–	–
1 kΩ	04	–	–
2,2 kΩ	05	25	45
4,7 kΩ	06	26	46
10 kΩ	07	27	47
22 kΩ	08	28	48
47 kΩ	09	29	49
100 kΩ	11	31	51
220 kΩ	12	32	52
470 kΩ	13	33	53
1 MΩ	14	–	–
2,2 MΩ**	15	–	–
4,7 MΩ**	16	–	–

* carbon only.
** cermet only.

Catalogue number for other versions on request.

VERSION WITHOUT SPINDLE, SINGLE HORIZONTAL

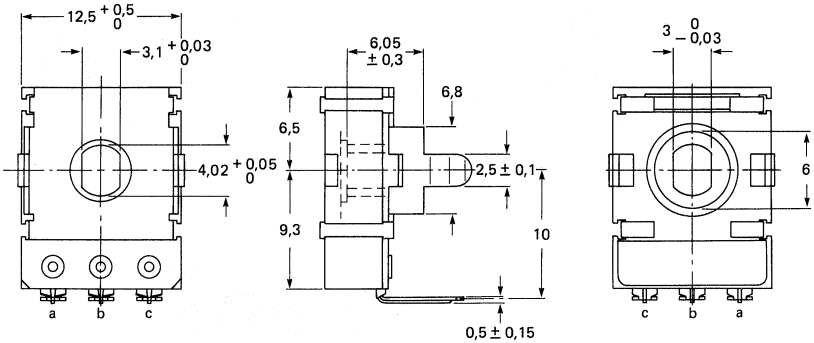

Rotor drawn at mid position

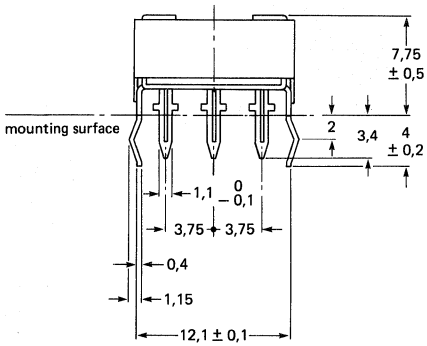

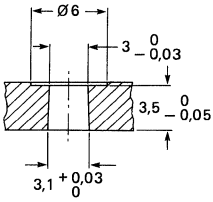

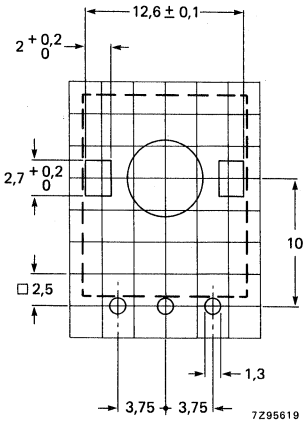

Fig. 3.

Hole pattern in printed wiring board, viewed from component side.

DEVELOPMENT DATA

Main properties

Climatic category (IEC 68)	carbon 25/070/10, cermet 25/70/56
Resistance range, E3 series	
carbon, linear	470 Ω to 1,0 MΩ tolerance 20%
carbon, non-linear	2,2 kΩ to 470 kΩ tolerance 20%
cermet, linear	470 Ω to 4,7 MΩ, tolerance 10%
Resistance law (see Fig. 19)	carbon A, B, C cermet A
Maximum dissipation at T_{amb} = 40 °C	
carbon, linear	0,2 W
carbon, non-linear	0,1 W
cermet, linear	1,0 W
Test voltage for 1 minute	350 V, 50 Hz

For further information see Electrical Data, Mechanical Data and Battery Switch.

Composition of the catalogue number, PP12 without spindle, single, horizontal

2322 5.5 00 . . .

- 2322: code for element
  - 0 = carbon
  - 1 = cermet
- 5: code for tags and detent
  - 3 = p.w. tags, no detent
  - 8 = p.w. tags, detent 50%
- . . . : resistance code

Table for R_{nom}

R \ law	linear	logarithmic*	rev. logarithmic*
470 Ω	03	–	–
1 kΩ	04	–	–
2,2 kΩ	05	25	45
4,7 kΩ	06	26	46
10 kΩ	07	27	47
22 kΩ	08	28	48
47 kΩ	09	29	49
100 kΩ	11	31	51
220 kΩ	12	32	52
470 kΩ	13	33	53
1 MΩ	14	–	–
2,2 MΩ**	15	–	–
4,7 MΩ**	16	–	–

* carbon only.
** cermet only.

Catalogue numbers for other versions on request.

VERSION WITHOUT SPINDLE, TANDEM VERTICAL

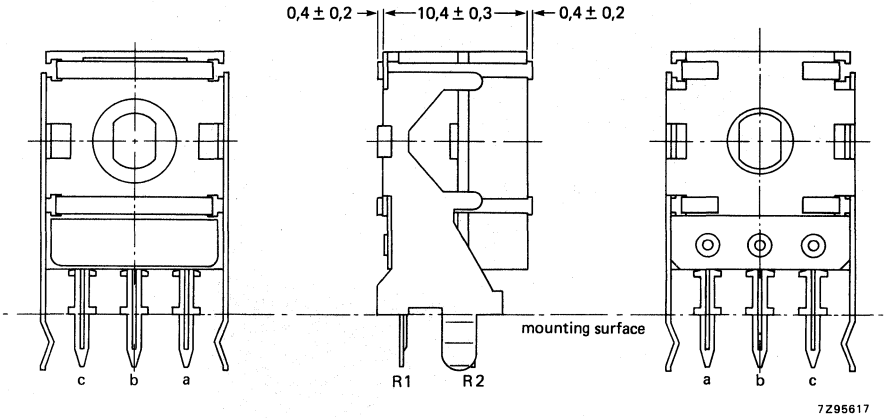

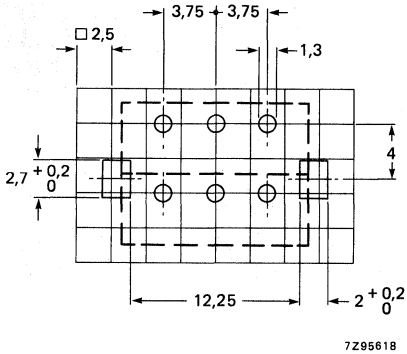

Hole pattern in printed wiring board, viewed from component side.

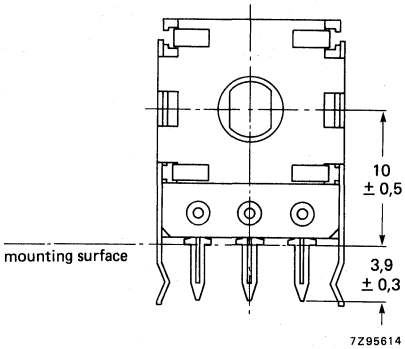

Both modules have no mutual mechanical coupling.

Fig. 4.

DEVELOPMENT DATA

Main properties

Climatic category (IEC 68)	carbon 25/070/10, cermet 25/070/56
Resistance range, E3 series	
carbon, linear	470 Ω to 1,0 MΩ, tolerance 20%
carbon, non-linear	2200 Ω to 470 kΩ, tolerance 20%
cermet, linear	470 Ω to 4,7 MΩ, tolerance 10%
Resistance law (see Fig. 19)	carbon A, B, C, H, K cermet A
Maximum dissipation at T_{amb} = 40 °C	
carbon, linear	0,2 + 0,2 W
carbon, non-linear	0,1 + 0,1 W
cermet, linear	1,0 + 1,0 W
Test voltage for 1 minute	350 V, 50 Hz

For further information see Electrical Data and Mechanical Data.

Composition of the catalogue number, PP12 without spindle, tandem, vertical

2322 5.5 05 . . .

- code for element: 0 = carbon; 1 = cermet
- code for tags and detent: 0 = short tags, no detent; 1 = long tags, no detent; 5 = short tags, detent 50%; 6 = long tags, detent 50%
- resistance code: Table for R_{nom}

R \ law	linear	logarithmic*	rev. logarithmic*
470 Ω	03	–	–
1 kΩ	04	–	–
2,2 kΩ	05	25	45
4,7 kΩ	06	26	46
10 kΩ	07	27	47
22 kΩ	08	28	48
47 kΩ	09	29	49
100 kΩ	11	31	51
220 kΩ	12	32	52
470 kΩ	13	33	53
1 MΩ	14	–	–
2,2 MΩ**	15	–	–
4,7 MΩ**	16	–	–

* carbon only.
** cermet only.

Catalogue numbers for other versions on request.

VERSION WITHOUT SPINDLE, TANDEM VERTICAL WITH BATTERY SWITCH

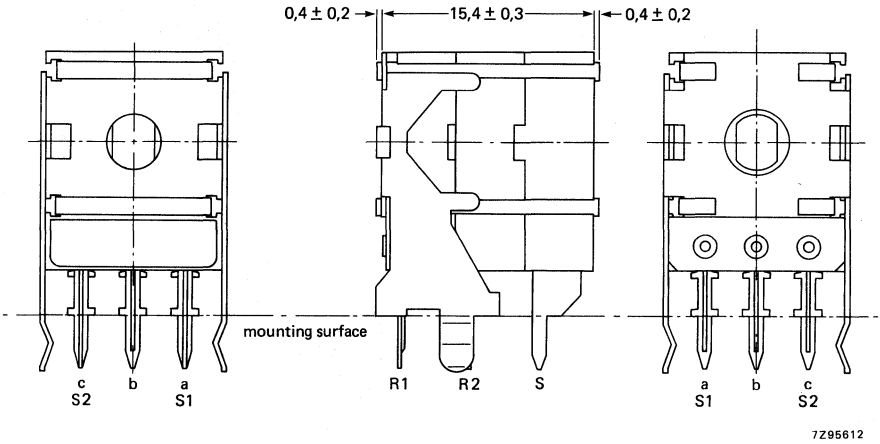

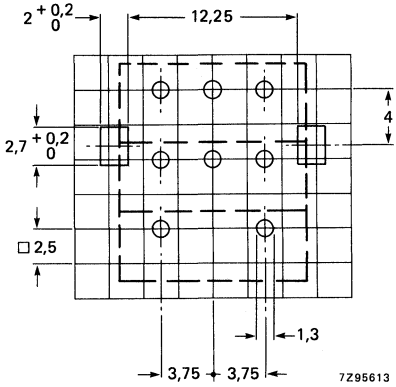

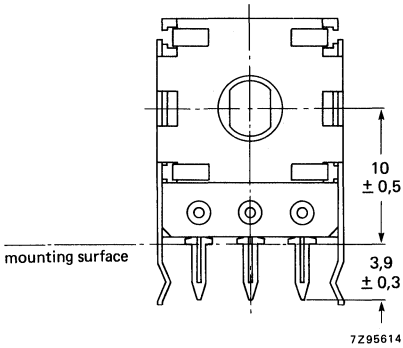

Hole pattern in printed wiring board, viewed from component side.

Fig. 5.

For other dimensions see version without spindle, single vertical with bracket.

DEVELOPMENT DATA

Main properties

Climatic category (IEC 68)	carbon 25/070/10, cermet 25/070/56
Resistance range, E3 series	
carbon, linear	470 Ω to 1,0 MΩ, tolerance 20%
carbon, non-linear	2200 Ω to 470 kΩ, tolerance 20%
cermet, linear	470 Ω to 4,7 MΩ, tolerance 10%
Resistance law (see Fig. 19)	carbon A, B, C cermet A
Maximum dissipation at T_{amb} = 40 °C	
carbon, linear	0,2 + 0,2 W
carbon, non-linear	0,1 + 0,1 W
cermet, linear	1 + 1 W
Test voltage for 1 minute	350 V, 50 Hz

For further information see Electrical Data, Mechanical Data and Battery Switch.

Composition of the catalogue number, PP12 without spindle, tandem, vertical with switch

2322 5.5 15 . . .

code for element
0 = carbon
1 = cermet

code for tags and detent
0 = short tags, no detent
1 = long tags, no detent
5 = short tags, detent 50%
6 = long tags, detent 50%

resistance code

Table for R_{nom}

R \ law	linear	logarithmic*	rev. logarithmic*
470 Ω	03	–	–
1 kΩ	04	–	–
2,2 kΩ	05	25	45
4,7 kΩ	06	26	46
10 kΩ	07	27	47
22 kΩ	08	28	48
47 kΩ	09	29	49
100 kΩ	11	31	51
220 kΩ	12	32	52
470 kΩ	13	33	53
1 MΩ	14	–	–
2,2 MΩ**	15	–	–
4,7 MΩ**	16	–	–

* carbon only.
** cermet only.

Catalogue numbers for other versions on request.

VERSIONS WITHOUT SPINDLE, DUAL VERTICAL

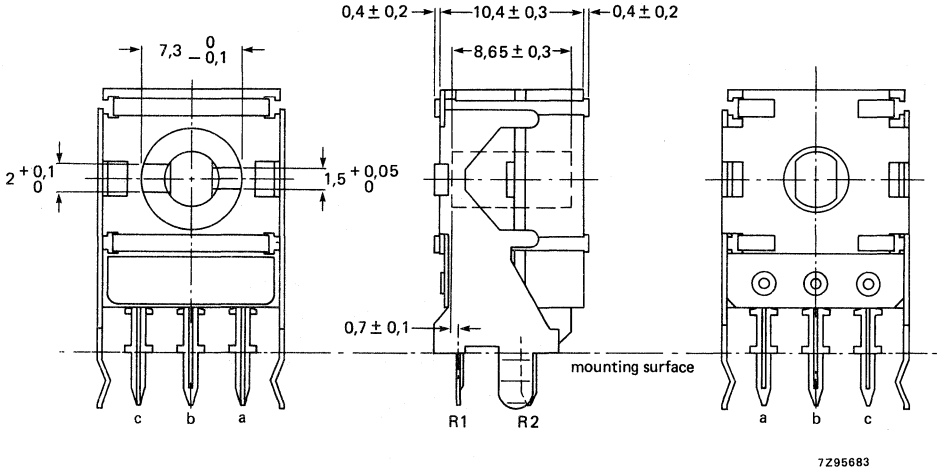

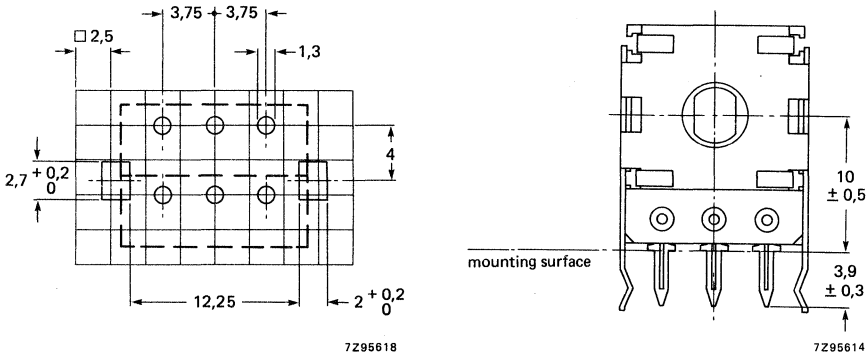

Hole pattern in printed wiring board, viewed from component side.

Fig. 6.

For other dimensions see version without spindle, single vertical with bracket.

Main properties

Climatic category (IEC 68)	carbon 25/070/10, cermet 25/070/56
Resistance range, E3 series	
carbon, linear	470 Ω to 1,0 MΩ, tolerance 20%
carbon, non-linear	2200 Ω to 470 kΩ, tolerance 20%
cermet, linear	470 Ω to 4,7 MΩ, tolerance 10%
Resistance law (see Fig. 19)	carbon, A, B, C cermet A
Maximum dissipation at T_{amb} = 40 °C	
carbon, linear	0,2 + 0,2 W
carbon, non-linear	0,1 + 0,1 W
cermet, linear	1,0 + 1,0 W
Test voltage for 1 minute	350 V, 50 Hz

For further information see Electrical Data and Mechanical Data.

Catalogue number

On request.

DEVELOPMENT DATA

VERSION WITH SPINDLE, SINGLE VERTICAL

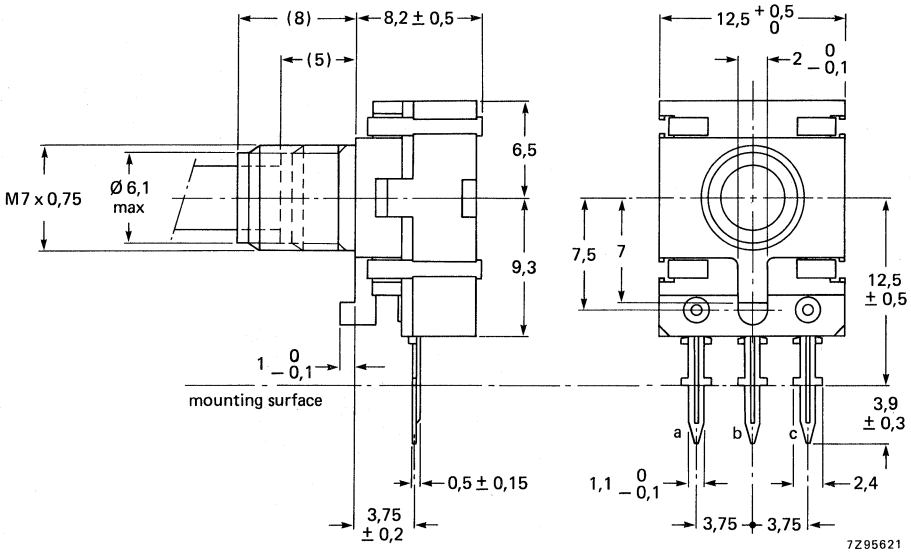

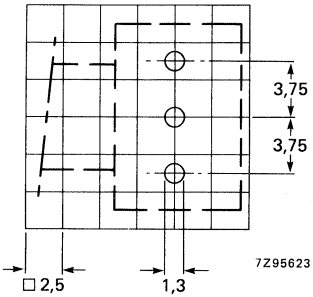

Hole pattern in FC board, viewed from component side.

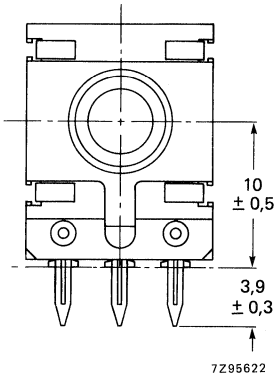

Fig. 7.

Main properties

Climatic category (IEC 68)	metal spindle	carbon 25/070/10, cermet 40/125/56
	plastic spindle	carbon 25/070/10, cermet 25/070/56
Resistance range, E3 series		
carbon, linear		470 Ω to 1,0 MΩ, tolerance 20%
carbon, non-linear		2200 Ω to 470 kΩ, tolerance 20%
cermet, linear		470 Ω to 4,7 MΩ, tolerance 10%
Resistance law (see Fig. 19)		carbon A, B, C, H, K cermet A
Maximum dissipation at T_{amb} = 40 °C		
carbon, linear		0,2 W
carbon, non-linear		0,1 W
cermet, linear		1,5 W metal spindle, 1 W plastic spindle
Test voltage for 1 minute		500 V, 50 Hz

For further information see Electrical Data and Mechanical Data.

DEVELOPMENT DATA

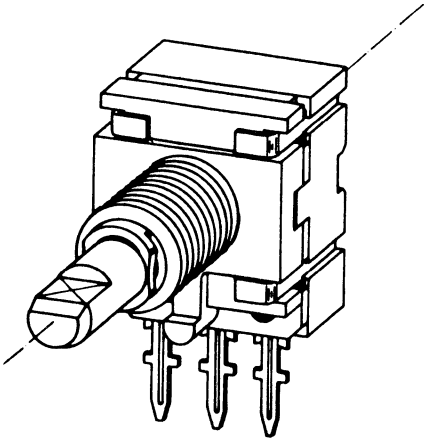

Composition of the catalogue number, PP12 with spindle, single, vertical

2322 5.6 0 . . . .

code for element
0 = carbon
1 = cermet

code for bushing; spindle and material

	bushing length	spindle type	spindle material	L = 20 dia
0 =	5	plain	metal	6
1 =	5	flat	metal	6
2 =	5	plain	metal	4
3 =	5	flat	metal	4
4 =	5	plain	plastic	4
5 =	8	plain	metal	6
6 =	8	flat	metal	6
7 =	8	plain	metal	4
8 =	8	flat	metal	4
9 =	8	plain	plastic	4

resistance code

code for tags and detent
0 = short tags, no detent
1 = long tags, no detent
5 = short tags, detent 50%
6 = long tags, detent 50%

Table for R_{nom}

R \ law	linear	logarithmic*	rev. logarithmic*
470 Ω	03	–	–
1 kΩ	04	–	–
2,2 kΩ	05	25	45
4,7 kΩ	06	26	46
10 kΩ	07	27	47
22 kΩ	08	28	48
47 kΩ	09	29	49
100 kΩ	11	31	51
220 kΩ	12	32	52
470 kΩ	13	33	53
1 MΩ	14	–	–
2,2 MΩ**	15	–	–
4,7 MΩ**	16	–	–

R \ law	logarithmic* with tap at 10%	at 20%
5 + 42 kΩ	72	–
20 + 200 kΩ	67	–
50 + 400 kΩ	73	–
100 + 900 kΩ	64	–
2 + 8 kΩ	–	76
5 + 17 kΩ	–	82
10 + 37 kΩ	–	86
20 + 80 kΩ	–	77
50 + 170 kΩ	–	83
100 + 370 kΩ	–	87
	–	–
	–	–
	–	–

* carbon only.
** cermet only.

Catalogue numbers for other versions on request.

VERSION WITH SPINDLE, SINGLE VERTICAL WITH BATTERY SWITCH

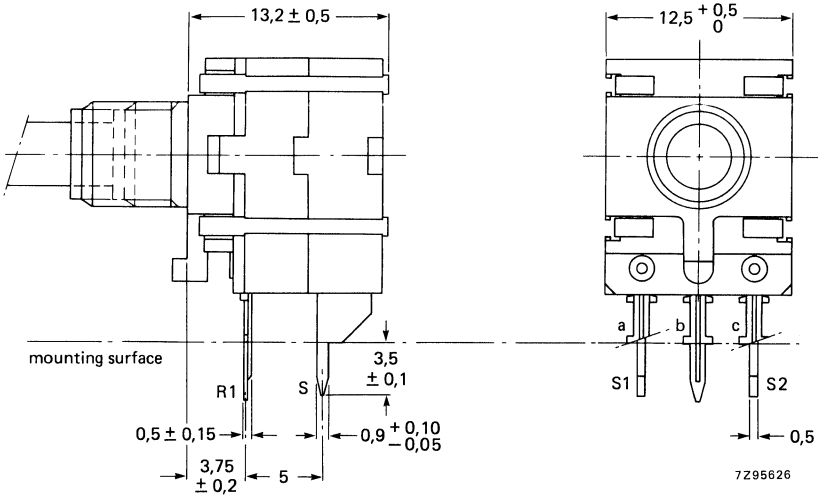

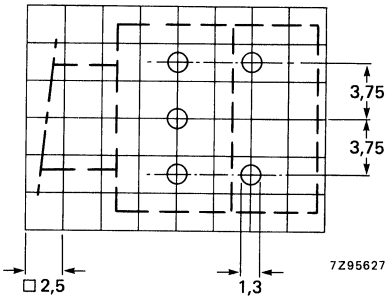

Hole pattern in printed wiring board, viewed from component side.

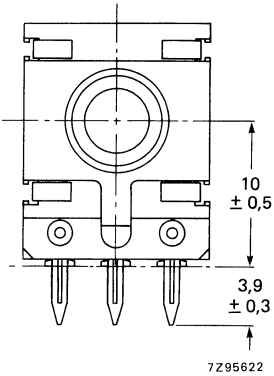

Fig. 8.

Main properties

Climatic category (IEC 68)	metal spindle	carbon 25/070/10, cermet 40/125/56
	plastic spindle	carbon 25/070/10, cermet 25/070/56
Resistance range, E3 series		
carbon, linear		470 Ω to 1,0 MΩ, tolerance 20%
carbon, non-linear		2200 Ω to 470 kΩ, tolerance 20%
cermet, linear		470 Ω to 4,7 MΩ, tolerance 10%
Resistance law (see Fig. 19)		carbon A, B, C, H, K cermet A
Maximum dissipation at T_{amb} = 40 °C		
carbon, linear		0,2 W
carbon, non-linear		0,1 W
cermet, linear		1,25 W (metal spindle), 1 W (plastic spindle)
Test voltage for 1 minute		500 V, 50 Hz

For extended data see under Electrical Data, Mechanical Data and Battery Switch.

Composition of the catalogue number, PP12 with spindle, single, vertical with battery switch

2322 5.6 1 . . . .

code for element
0 = carbon
1 = cermet

code for bushing; spindle and material

	bushing length	spindle type	spindle material	L = 20 dia
0 =	5	plain	metal	6
1 =	5	flat	metal	6
2 =	5	plain	metal	4
3 =	5	flat	metal	4
4 =	5	plain	plastic	4
5 =	8	plain	metal	6
6 =	8	flat	metal	6
7 =	8	plain	metal	4
8 =	8	flat	metal	4
9 =	8	plain	plastic	4

resistance code

code for tags and detent
0 = short tags, no detent
1 = long tags, no detent
5 = short tags, detent 50%
6 = long tags, detent 50%

DEVELOPMENT DATA

Table for R_{nom}

R \ law	linear	logarithmic*	rev. logarithmic*
470 Ω	03	–	–
1 kΩ	04	–	–
2,2 kΩ	05	25	45
4,7 kΩ	06	26	46
10 kΩ	07	27	47
22 kΩ	08	28	48
47 kΩ	09	29	49
100 kΩ	11	31	51
220 kΩ	12	32	52
470 kΩ	13	33	53
1 MΩ	14	–	–
2,2 MΩ**	15	–	–
4,7 MΩ**	16	–	–

R \ law	logarithmic* with tap at 10%	at 20%
5 + 42 kΩ	72	–
20 + 200 kΩ	67	–
50 + 420 kΩ	73	–
100 + 900 kΩ	64	–
2 + 8 kΩ	–	76
5 + 17 kΩ	–	82
10 + 37 kΩ	–	86
20 + 80 kΩ	–	77
50 + 170 kΩ	–	83
100 + 370 kΩ	–	87
	–	–
	–	–
	–	–

* carbon only.
** cermet only.

Catalogue numbers for other versions on request.

VERSION WITH SPINDLE, SINGLE HORIZONTAL

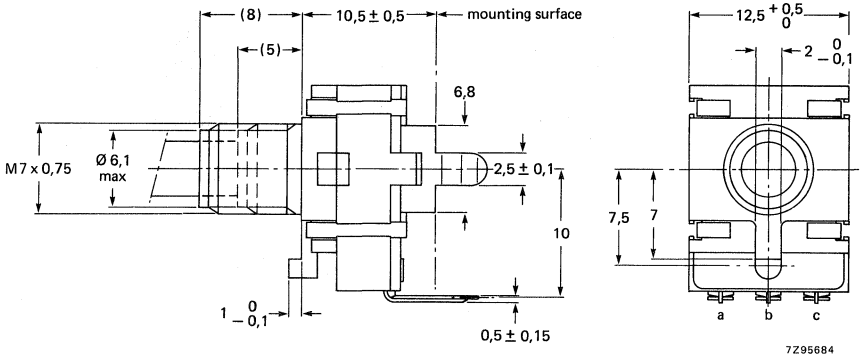

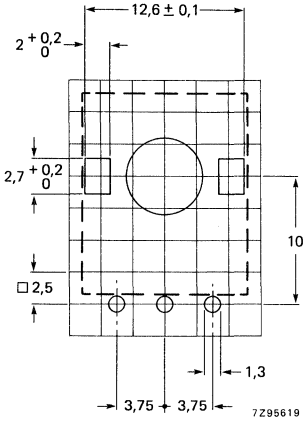

Hole pattern in printed wiring board, viewed from component side.

Fig. 9.

Main properties

Climatic category	metal spindle	carbon 25/070/10, cermet 40/125/56
	plastic spindle	carbon 25/070/10, cermet 25/070/56
Resistance range, E3 series		
carbon, linear		220 Ω to 4,7 MΩ, tolerance 20%
carbon, non-linear		2200 Ω to 470 kΩ, tolerance 20%
cermet, linear		220 Ω to 4,7 MΩ, tolerance 10%
Resistance law (see Fig. 19)		carbon A, B, C cermet A
Maximum dissipation at T_{amb} = 40 °C		
carbon, linear		0,2 W
carbon, non-linear		0,1 W
cermet, linear		1,5 W (metal spindle), 1 W (plastic spindle)
Test voltage for 1 minute		500 V, 50 Hz

For further information see Electrical Data and Mechanical Data.

Composition of the catalogue number, PP12 with spindle, single, horizontal

2322 5.6 0 . . . .

code for element
0 = carbon
1 = cermet

code for bushing; spindle and material

	bushing length	spindle type	spindle material	spindle L = 20 dia
0 =	5	plain	metal	6
1 =	5	flat	metal	6
2 =	5	plain	metal	4
3 =	5	flat	metal	4
4 =	5	plain	plastic	4
5 =	8	plain	metal	6
6 =	8	flat	metal	6
7 =	8	plain	metal	4
8 =	8	flat	metal	4
9 =	8	plain	plastic	4

resistance code

code for detent
3 = no detent
8 = detent at 50%

Table for R_{nom}

R \ law	linear	logarithmic*	rev. logaritmic*
470 Ω	03	–	–
1 kΩ	04	–	–
2,2 kΩ	05	25	45
4,7 kΩ	06	26	46
10 kΩ	07	27	47
22 kΩ	08	28	48
47 kΩ	09	29	49
100 kΩ	11	31	51
220 kΩ	12	32	52
470 kΩ	13	33	53
1 MΩ	14	–	–
2,2 MΩ**	15	–	–
4,7 MΩ**	16	–	–

R \ law	logarithmic* with tap at 10%	logarithmic* with tap at 20%
5 + 42 kΩ	72	–
20 + 200 kΩ	67	–
50 + 420 kΩ	7,3	–
100 + 900 kΩ	64	–
2 + 8 kΩ	–	76
5 + 17 kΩ	–	82
10 + 37 kΩ	–	86
20 + 80 kΩ	–	77
50 + 170 kΩ	–	83
100 + 370 kΩ	–	87
	–	–
	–	–
	–	–

* carbon only.
** cermet only.

Catalogue numbers for other versions on request.

VERSIONS WITH SPINDLE, TANDEM VERTICAL

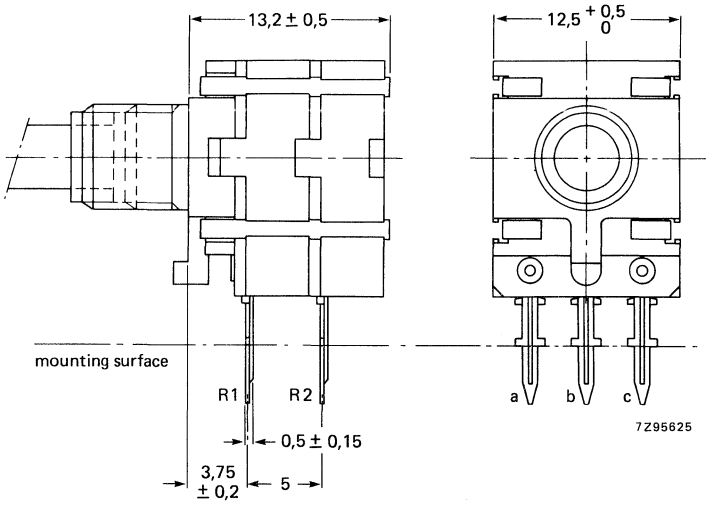

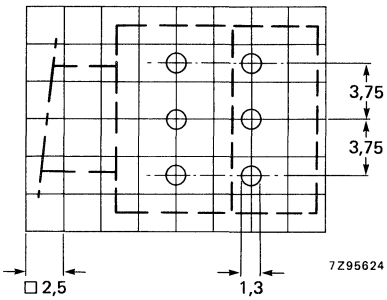

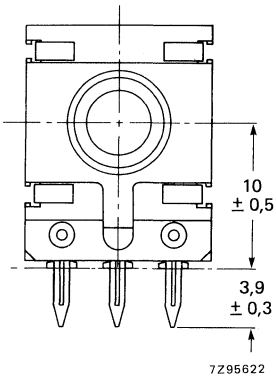

Hole pattern in printed wiring board, viewed from component side.

Fig. 10.

Main properties

Climatic category (IEC 68)	metal spindle	carbon 25/070/10, cermet 40/125/56
	plastic spindle	carbon 25/070/10, cermet 25/070/56
Resistance range, E3 series		
carbon, linear		470 Ω to 1,0 MΩ, tolerance 20%
carbon, non-linear		2200 Ω to 470 kΩ, tolerance 20%
cermet, linear		470 Ω to 4,7 MΩ, tolerance 10%
Resistance law (see Fig. 19)		carbon A, B, C, H, K cermet A
Maximum dissipation at T_{amb} = 40 °C		
carbon, linear		0,2 + 0,2 W
carbon, non-linear		0,1 + 0,1 W
cermet, linear		1,0 + 1,0 W metal spindle 0,75 + 0,75 W plastic spindle
Test voltage for 1 minute		500 V, 50 Hz

For further information see Electrical Data and Mechanical Data.

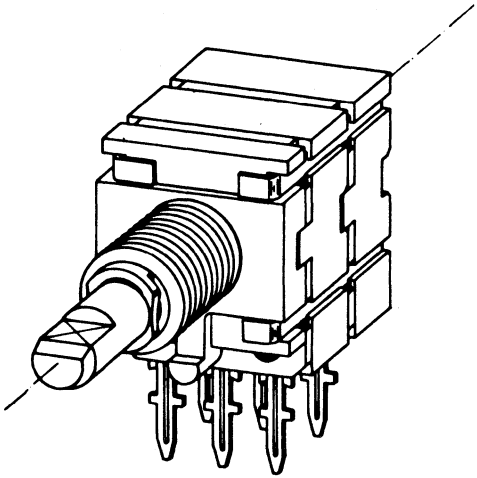

Composition of the catalogue number, PP12 with spindle, tandem, vertical

2322 5.7 0 . . . .

code for element
0 = carbon
1 = cermet

code for bushing; spindle and material

	bushing length	spindle type	spindle material	L = 20 dia
0 =	5	plain	metal	6
1 =	5	flat	metal	6
2 =	5	plain	metal	4
3 =	5	flat	metal	4
4 =	5	plain	plastic	4
5 =	8	plain	metal	6
6 =	8	flat	metal	6
7 =	8	plain	metal	4
8 =	8	flat	metal	4
9 =	8	plain	plastic	4

code for tags and detent
0 = short tags, no detent
1 = long tags, no detent
5 = short tags, detent 50%
6 = long tags, detent 50%

resistance code

Table for R_{nom}

R \ law	linear	logarithmic*	rev. logarithmic*
470 Ω	03	–	–
1 kΩ	04	–	–
2,2 kΩ	05	25	45
4,7 kΩ	06	26	46
10 kΩ	07	27	47
22 kΩ	08	28	48
47 kΩ	09	29	49
100 kΩ	11	31	51
220 kΩ	12	32	52
470 kΩ	13	33	53
1 MΩ	14	–	–
2,2 MΩ**	15	–	–
4,7 MΩ**	16	–	–

R \ law	logarithmic* with tap at 10%	logarithmic* with tap at 20%
5 + 42 kΩ	72	–
20 + 200 kΩ	67	–
50 + 420 kΩ	73	–
100 + 900 kΩ	64	–
2 + 8 kΩ	–	76
5 + 17 kΩ	–	82
10 + 37 kΩ	–	86
20 + 80 kΩ	–	77
50 + 170 kΩ	–	83
100 + 370 kΩ	–	87
	–	–
	–	–
	–	–

* carbon only.
** cermet only.

Catalogue numbers for other versions on request.

DEVELOPMENT DATA

VERSIONS WITH SPINDLE, TANDEM VERTICAL WITH BATTERY SWITCH

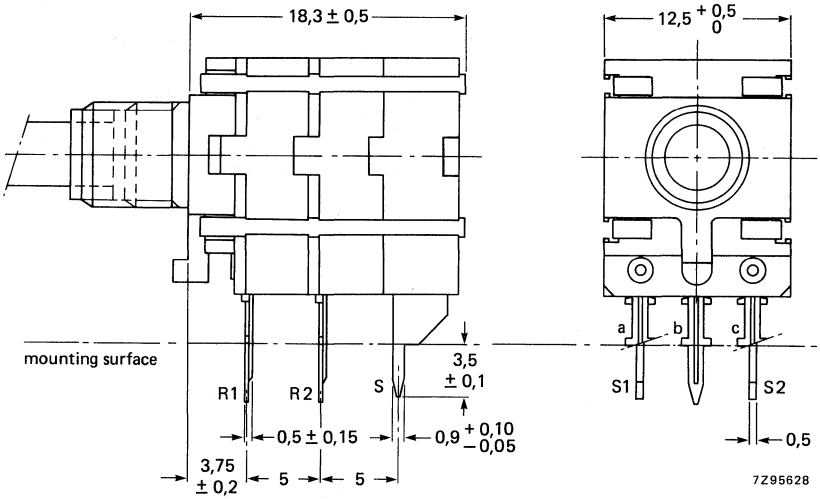

Long tags.

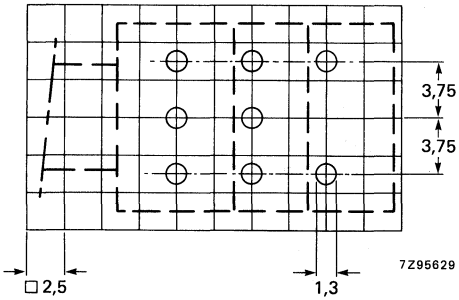

Hole pattern, viewed from component side.

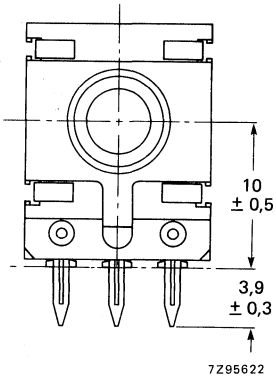

Short tags.

Fig. 11.

Main properties

Climatic category (IEC 68)	metal spindle	carbon 25/070/10, cermet 40/125/56
	plastic spindle	carbon 25/070/10, cermet 25/070/56
Resistance range, E3 series		
carbon, linear		220 Ω to 1,0 MΩ, tolerance 20%
carbon, non-linear		2200 Ω to 470 kΩ, tolerance 20%
cermet, linear		220 Ω to 4,7 MΩ, tolerance 10%
Resistance law (see Fig. 19)		carbon A, B, C, H, K cermet A
Maximum dissipation at T_{amb} = 40 °C		
carbon, linear		0,2 + 0,2 W
carbon, non-linear		0,1 + 0,1 W
cermet, linear		1,0 + 1,0 W (metal spindle), 0,75 + 0,75 W (plastic spindle)
Test voltage for 1 minute		500 V, 50 Hz

For further information see Electrical Data, Mechanical Data and Battery Switch.

DEVELOPMENT DATA

Composition of the catalogue number, PP12, with spindle, tandem, vertical with battery switch

2322 5.7 1 . . . .

code for element
0 = carbon
1 = cermet

resistance code

code for tags
0 = short tags
1 = long tags

code for bushing, spindle and material

	bushing length	spindle type	spindle material	L = 20 dia
0 =	5	plain	metal	6
1 =	5	flat	metal	6
2 =	5	plain	metal	4
3 =	5	flat	metal	4
4 =	5	plain	plastic	4
5 =	8	plain	metal	6
6 =	8	flat	metal	6
7 =	8	plain	metal	4
8 =	8	flat	metal	4
9 =	8	plain	plastic	4

Table for R_{nom}

R \ law	linear	logarithmic*	rev. logarithmic*
470 Ω	03	–	–
1 kΩ	04	–	–
2,2 kΩ	05	25	45
4,7 kΩ	06	26	46
10 kΩ	07	27	47
22 kΩ	08	28	48
47 kΩ	09	29	49
100 kΩ	11	31	51
220 kΩ	12	32	52
470 kΩ	13	33	53
1 MΩ	14	–	–
2,2 MΩ**	15	–	–
4,7 MΩ**	16	–	–

R \ law	logarithmic* with tap at 10%	at 20%
5 + 42 kΩ	72	–
20 + 200 kΩ	67	–
50 + 420 kΩ	73	–
100 + 900 kΩ	64	–
2 + 8 kΩ	–	76
5 + 17 kΩ	–	82
10 + 37 kΩ	–	86
20 + 80 kΩ	–	77
50 + 170 kΩ	–	83
100 + 370 kΩ	–	87
	–	–
	–	–
	–	–

* carbon only.
** cermet only.

Catalogue numbers for other versions on request.

VERSIONS WITH SPINDLE, DUAL VERTICAL

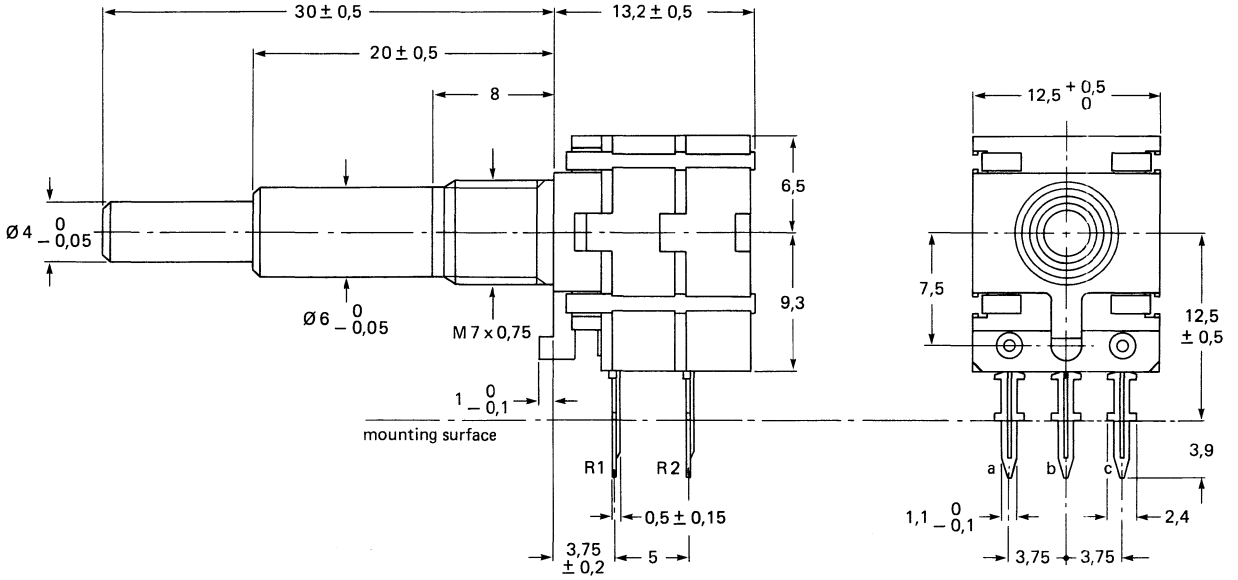

PC board, viwed from component side.

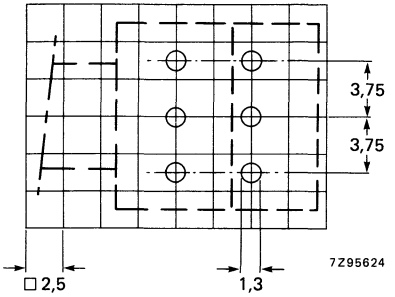

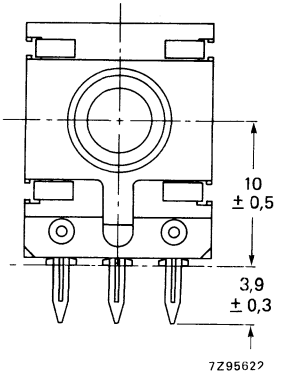

Fig. 12.

Main properties

Climatic category (IEC 68)	carbon 25/070/10, cermet 25/070/56
Resistance range, E3 series	
carbon, linear	470 Ω to 1,0 MΩ, tolerance 20%
carbon, non-linear	2200 Ω to 470 kΩ, tolerance 20%
cermet, linear	470 Ω to 4,7 MΩ, tolerance 10%
Resistance law (see Fig. 19)	carbon A, B, C, H, K cermet A
Maximum dissipation at T_{amb} = 40 °C	
carbon, linear	0,2 + 0,2 W
carbon, non-linear	0,1 + 0,1 W
cermet, linear	1,0 + 1,0 W (metal spindle), 0,75 + 0,75 W (plastic spindle)
Test voltage for 1 minute	500 V, 50 Hz

For further information see Electrical Data and Mechanical Data.

DEVELOPMENT DATA

Composition of the catalogue number, PP12 with spindle, dual, vertical

2322 5.8 0 . . . .

code for element
0 = carbon
1 = cermet

resistance code
second module

resistance code
first module

Table for R_{nom}

R \ law	linear	logarithmic*	rev. logarithmic*
470 Ω	03	–	–
1 kΩ	04	–	–
2,2 kΩ	05	25	45
4,7 kΩ	06	26	46
10 kΩ	07	27	47
22 kΩ	08	28	48
47 kΩ	09	29	49
100 kΩ	11	31	51
220 kΩ	12	32	52
470 kΩ	13	33	53
1 MΩ	14	–	–
2,2 MΩ**	15	–	–
4,7 MΩ**	16	–	–

R \ law	logarithmic* with tap	
	at 10%	at 20%
5 + 42 kΩ	72	–
20 + 200 kΩ	67	–
50 + 420 kΩ	73	–
100 + 900 kΩ	64	–
2 + 8 kΩ	–	76
5 + 17 kΩ	–	82
10 + 37 kΩ	–	86
20 + 80 kΩ	–	77
50 + 170 kΩ	–	83
100 + 370 kΩ	–	87
	–	–
	–	–
	–	–

* carbon only.
** cermet only.

Catalogue numbers for other versions on request.

VERSIONS WITH ONE TAP

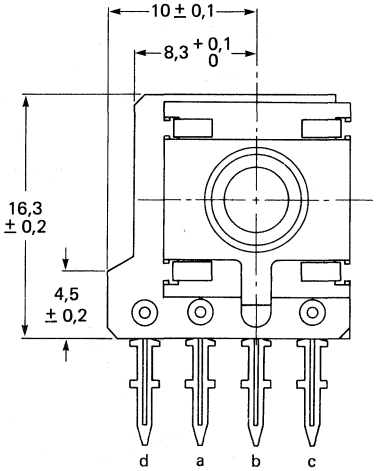

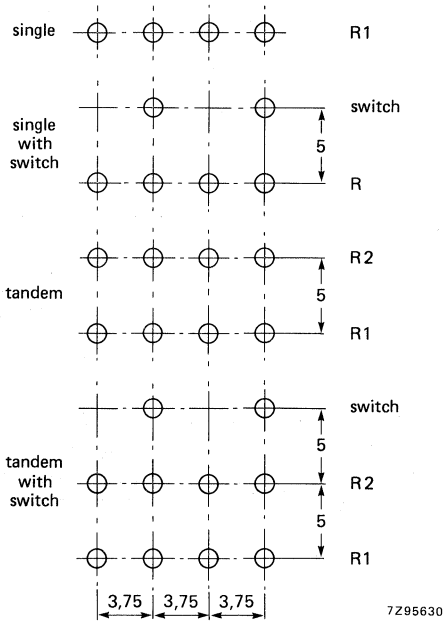

Fig. 13.

Notes:

- Versions with bracket cannot be supplied with a tap.
- Tandem – or other multiple units in modular version – do not require a bracket for mechanical stability. Such types can be supplied, therefore, also with a tap.

DEVELOPMENT DATA

Actuating device for potentiometers without spindle

Figure 14 shows the snap-in part of a plastic actuating device. Actuating devices are not supplied.

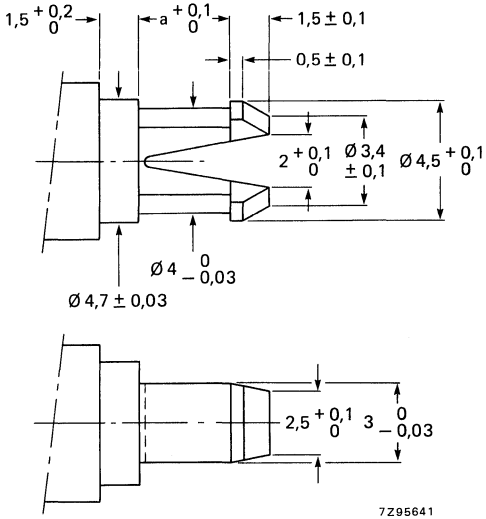

Fig. 14.

Dimensions a:

single	3,5
single with switch, tandem	8,5
tandem with switch	13,5

Mounting holes for potentiometers with spindle

for single and tandem potentiometers	required mounting holes in chassis	fixing of potentiometer
with mounting bush M7 x 0,75 mm	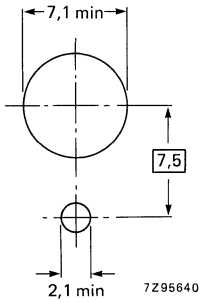	with supplied mounting nut; max. torque for tightening = 1 Nm; minimum thickness of mounting plate = 1 mm

Spindles, metal or plastic, M7 bushing

CCW position

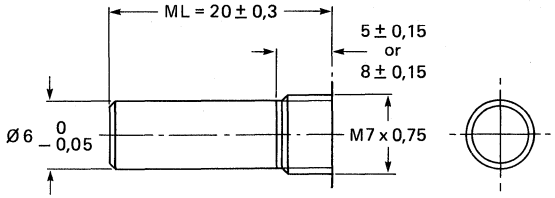

Fig. 15.

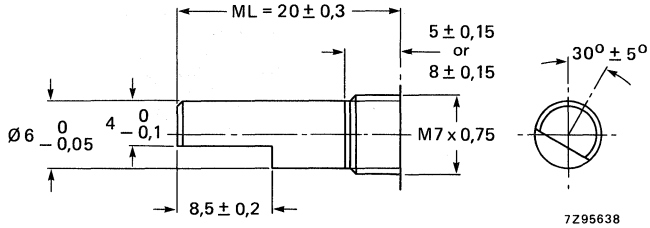

Fig. 16.

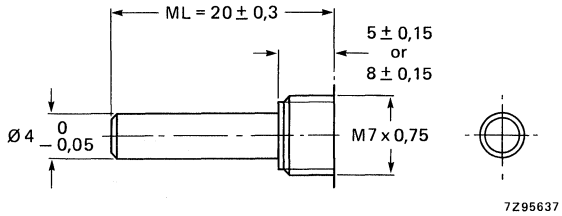

Fig. 17.

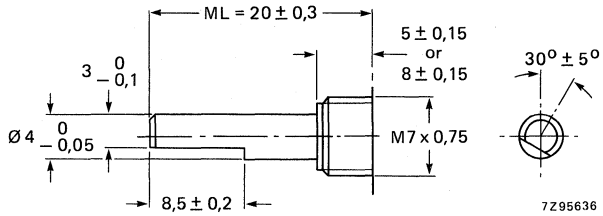

Fig. 18.

	carbon	cermet
Maximum attenuation		
$R_{tot} \geqslant 22\ k\Omega$, type A, B, C, H, K	$\geqslant 90$ dB	
$R_{tot} < 22\ k\Omega$, type A	$\geqslant 55$ dB	$\geqslant 60$ dB
$R_{tot} < 22\ k\Omega$, type B, C, H, K	$\geqslant 75$ dB	
Maximum dissipation at $T_{amb} = 40\ ^{o}C$ (P_{max})*		
linear law	0,2 W	1,25 W**
logarithmic law	0,1 W	
Rated element voltage, see Table 1		
500 V d.c. or 350 V a.c. never to be exceeded	$\sqrt{P_{max} \times R_{nom}}$	$\sqrt{P_{max} \times R_{nom}}$
Limiting slider current, see Table 1	$\sqrt{P_{max}/R_{nom}}$	$\sqrt{P_{max}/R_{nom}}$
Test voltage for 1 minute	500 V, 50 Hz	500 V, 50 Hz
Operating temperature range		
versions without spindle	−25 to + 70 °C	−25 to + 70 °C
versions with spindle (metal)	−25 to + 70 °C	−40 to + 125 °C
Storage temperature range		
without switch, versions without spindle	−40 to + 85 °C	−55 to + 100 °C
without switch, versions with spindle (metal)	−40 to + 85 °C	−55 to + 125 °C
with switch	−40 to + 85 °C	
Climatic category (IEC 68)		
versions without spindle	25/070/10	25/070/56
versions with metal spindle	25/070/10	40/125/56
versions with plastic spindle	25/070/10	26/070/56

ENVIRONMENTAL TESTS

tests	requirements		
		carbon	cermet
Climatic sequence	$\Delta R_{ac}/R_{ac}$	$\leqslant 10\%$	$\leqslant 2\%$
Damp heat, steady state	$\Delta R_{ac}/R_{ac}$	$\leqslant 15\%$	$\leqslant 2\%$
Mechanical endurance 10 000 cycles	$\Delta R_{ac}/R_{ac}$	$\leqslant 10\%$	$\leqslant 2\%$
Electrical endurance 1000 h at 70 °C, cyclic	$\Delta R_{ac}/R_{ac}$	$\leqslant 10\%$	$\leqslant 2\%$
Resistance to soldering heat (IEC 68-2, test T)	$\Delta R_{ac}/R_{ac}$	$\leqslant 2\%$	$\leqslant 1\%$
Change of temperature	$\Delta R_{ac}/R_{ac}$	$\leqslant 3\%$	$\leqslant 1\%$
	$\Delta V_{ab}/V_{ac}$	$\leqslant 1\%$	$\leqslant 0{,}5\%$
Bump and vibration	$\Delta R_{ac}/R_{ac}$	$\leqslant 2\%$	$\leqslant 0{,}5\%$
	$\Delta V_{ab}/V_{ac}$	$\leqslant 1\%$	$\leqslant 0{,}5\%$

* For derating see Fig. 20.

** For versions with metal spindle. The max. dissipation of cermet types with plastic spindle is 1 W (lin. law).

ELECTRICAL DATA

Unless otherwise specified, all values are valid at an ambient temperature of 18 to 22 °C, an atmospheric pressure of 86 to 106 kPa and a relative humidity of 45 to 75%.

For measuring and test methods, see IEC publications 393-1 and 68. The terms used are explained in the Glossary of terms.

	carbon		cermet
Resistance range, E3 series*			
potentiometers without spindle			
linear law	470 Ω to 1,0 MΩ		470 Ω to 4,7 MΩ
logarithmic law	2,2 kΩ to 470 kΩ		
potentiometers with spindle			
linear law	470 Ω to 1,0 MΩ		470 Ω to 4,7 MΩ
logarithmic law	2,2 kΩ to 470 kΩ		
Tolerance on resistance	± 20%		± 10%
Resistance law and tolerances (see Fig. 19)	type A, B, C, H		type A
Ganging tolerance (tandem potentiometers)			
linear law	standard	special	
at values between 10 and 90% of R_{total}	< 2 dB		
(reserved) logarithmic law			
at attenuations between 0 and 20 dB	< 2 dB		
at attenuations between 20 and 40 dB	< 3 dB		
at attenuations between 40 and 60 dB	< 6 dB		
with a tap at 10% of R_{total}, tap load 1% of R_{total} or with a tap at 20% of R_{total}, tap load 6,2% of R_{total}			
at attenuations between 0 and 20 dB	< 2 dB	< 2 dB	
at attenuations between 20 and 40 dB	< 3 dB	< 3 dB	
at attenuations between 40 and 60 dB	< 4 dB	< 3 dB	
at attenuations between 60 and 70 dB	< 6 dB	< 3 dB	
Terminal resistance, (residual)	10 Ω		⩽ 2% of R_n or 10 Ω
Contact resistance moving (CRM)			
linear law	⩽ 2% of R_{ac}		⩽ 2,5% of R_{ac}
logarithmic law	⩽ 4% of R_{ac}		–
Contact resistance variation (CRV), (acc. to IEC 393-1, sub. clause 4.17) initially,			
linear law	⩽ 1%		⩽ 1% of R_{ac}
logarithmic law	⩽ 2%		–
Temperature coefficient of resistance	± 500 x 10^{-6}/K		± 100 x 10^{-6}/K
type A, B, C, H, K; 1 MΩ to 4,7 MΩ*	± 1000 x 10^{-6}/K		
Insulation resistance			
after damp heat test	after 21 days		after 56 days
(IEC 68, test C)	⩾ 100 MΩ		⩾ 100 MΩ

* After 1000 h at 70 °C, $\frac{\Delta R_{ac}}{R_{ac}} = +10$ to -20%.

Characteristics of potentiometers without switch

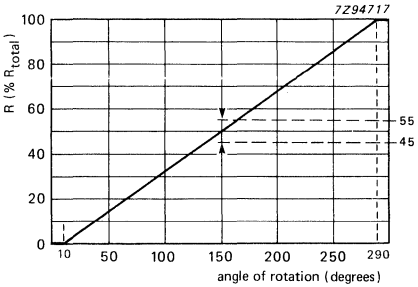

Type A
Fig. 19a Linear law.

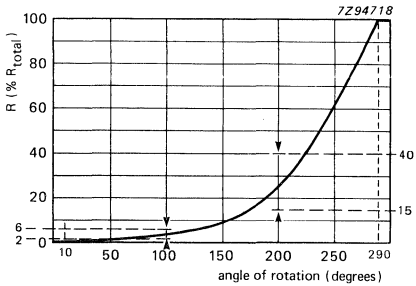

Type B
Fig. 19b Logarithmic law.

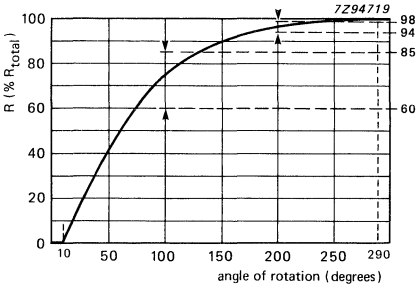

Type C
Fig. 19c Reversed logarithmic law.

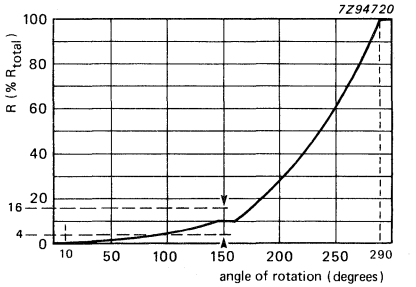

Type H
Fig. 19d Logarithmic law, tap at 10%.

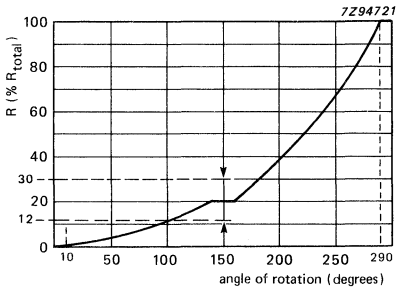

Type K
Fig. 19e Logarithmic law, tap at 20%.

DEVELOPMENT DATA

Characteristics of potentiometers with switch

The curves of Fig. 19a to d have to be adapted since the effective angle of rotation is from 50° to 290°. An example for linear law is given in Fig. 19c.

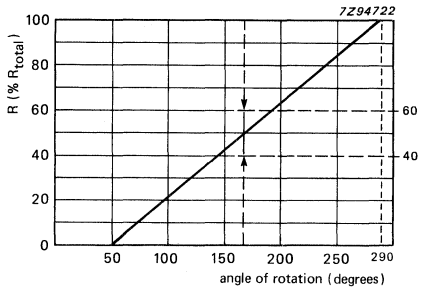

Type A
Fig. 19f Linear law.

Table 1, see also Figs 19a to 19f

nominal resistance	resistance law	rated element voltage d.c.		limiting slider current	
		at 40 °C V	at 70 °C V	at 40 °C mA	at 70 °C mA
470 Ω	lin.	9	6	20	14
1 kΩ		14	10	14	10
2,2 kΩ		21	14	9,5	6,7
4,7 kΩ		30	21	6,5	4,6
10 kΩ		44	31	4,5	3,2
22 kΩ		66	47	3,0	2,1
47 kΩ		97	68	2,0	1,5
100 kΩ		141	100	1,4	1,0
220 kΩ		210	148	1,0	0,7
470 kΩ		306	216	0,7	0,5
1 MΩ		447	316	0,4	0,3
2,2 MΩ		500	470	0,3	0,2
4,7 MΩ		500	500	0,2	0,15
2,2 kΩ	log/rev. log.	14	21	6,5	4,6
4,7 kΩ		21	15	4,6	3,3
10 kΩ		31	22	3,2	2,2
22 kΩ		47	33	2,1	1,5
47 kΩ		68	48	1,5	1,0
100 kΩ		100	70	1,0	0,7
220 kΩ		148	104	0,7	0,5
470 kΩ		216	153	0,5	0,3

Modules covered by this specification are derated from 100% rated dissipation at 40 °C to zero dissipation at 100 °C. This dissipation below 40 °C is the rated dissipation.

Linear law 100% = 0,2 W
Non-linear law 100% = 0,1 W

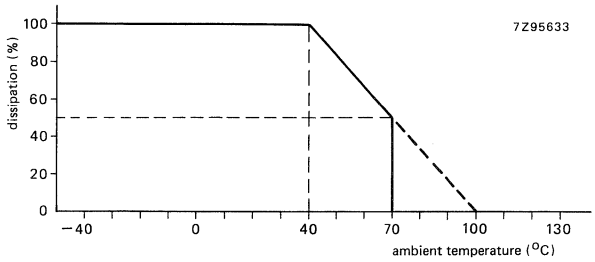

Fig. 20 Maximum permissible dissipation as a function of ambient temperature.

DEVELOPMENT DATA

MARKING

The potentiometers are marked according to IEC 62 as follows:
- nominal resistance (in RKM code)
- resistance law
- code for year and month of manufacture.

MECHANICAL DATA

	versions without spindle		versions with spindle		
	single duo	tandem	single duo	tandem	unit
Max. axial force	80	80	80	80	N
Operating torque initial	3 to 16	3 to 16	3 to 16	3 to 25	mNm
Operating torque of switch	25 to 75	25 to 75	25 to 75	25 to 75	mNm
Max. permissible end-stop torque	400	400	600*	600*	mNm
Angle of rotation	300 ± 2	300 ± 2	300 ± 2	300 ± 2	deg
Effective angle of rotation with switch	280 ± 2,5	280 ± 2,5	280 ± 2,5 240 ± 8,5	280 ± 2,5 240 ± 8,5	deg deg
Axial rotor/spindle play	⩽ 0,2	⩽ 0,2	⩽ 0,2	⩽ 0,2	mm
Radial rotor/spindle play	⩽ 0,2	⩽ 0,2	⩽ 0,2 per 10 mm	⩽ 0,2 per 10 mm	mm

Angle of rotation

1. Types without switch
   total mechanical angle 0° to 300°
   effective R-angle 10° to 290°
   For performance see Fig. 21a
2. Types with switch
   total mechanical angle 0° to 300°

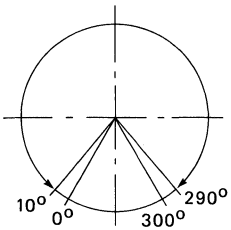

Fig. 21a.

αA: Switch angle: 15° ± 10°
Switch at "on" position and rotor at leftmost position (CCW)

αB: Switch-off angle: 23° ± 10°

αC: Effective resistance starting angle: 50° ± 5°

αD: Switch-on angle: 277° ± 10°

For performance see Fig. 21b

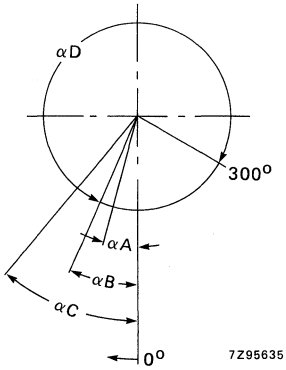

Fig. 21b.

MOUNTING

The potentiometers with printed-wiring terminals are intended for p.c. board mounting with a grid pitch of 1e (2,54 mm). The holes in the board should be 1,3 ± 0,5 mm; the board thickness not over 2 mm. Potentiometers with bushing should be mounted as described on page 69.

* For metal spindles; 400 mNm for plastic spindles.

DEVELOPMENT DATA

The switch

The spring actuated switch is specially designed for the modular PP12 potentiometer system but can also be used as an independent low power SPST rotary switch. The terminals must be soldered with the switch in 'off' position.

Electrical ratings and characteristics

Unless otherwise specified, all electrical values apply at an ambient temperature of 15 to 35 °C, an atmospheric pressure of 86 to 106 kPa and a relative humidity of 45 to 75%.

D.C. voltage/current rating, see note 1	14,4 V/3,5 A
Isolation voltage, d.c., for 1 minute	
initial	500 V
after 21 days humidity test to IEC 68	100 V
Contact resistance (C.R.) at max. 20 mV (d.c. or a.c.) and 100 mA	⩽ 20 mΩ
Insulation resistance, see note 2	
initial	⩾ 100 MΩ
after 21 days humidity test to IEC 68	⩾ 2 MΩ
Climatic sequence	ΔCR ⩽ 30 mΩ
Damp heat, steady state	ΔCR ⩽ 30 mΩ
Electrical endurance, 1000 h at 70 °C; 3,5 A, d.c.	ΔCR ⩽ 30 mΩ
Bump and vibration	ΔCR ⩽ 30 mΩ no interruption during test

Note 1

The specification holds for the switch being used as depicted in the circuit diagram below. Connection of the plus pole: under consideration.

During the switching action the current through the switch is determined by: E = 16 V (d.c.); L = 250 μH (R = 150 mΩ); C = 1000 μF; R_V = 32 Ω

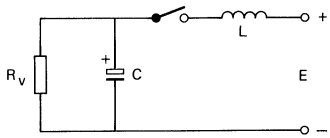

7Z95632

Current through the switch in switched condition: max. 3,5 A (at 14,4 V); max. 1 A and max. 4,5 A during 150 ms/1000 cycles (1 cycle = 1 s).
See diagram.

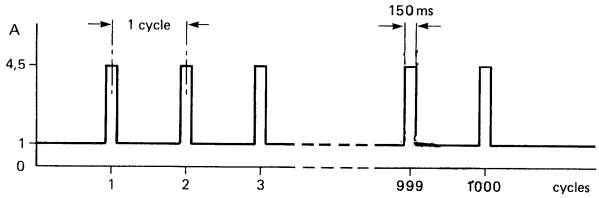

7Z95634

Note 2

Measured between the switch terminals and measured between the interconnected terminals and other metal parts.

MODULAR CARBON AND CERMET POTENTIOMETERS

The PP17 series includes resistance elements (linear and logarithmic), battery switches, drive units, mounting brackets, detents, shielding, cover, and heatsink, which can be efficiently assembled to customer's order to form an almost infinite variety of carbon and cermet control potentiometers. All types of these rectangular potentiometers are custom built from standard stock parts and are therefore available within comparitively short delivery times. The surveys on the following pages show the most probable combinations of items. The various modular elements are then described, and the electrical and mechanical details of complete units are given. The resistance elements can also be supplied separately.

QUICK REFERENCE DATA

Resistance range (E3 series)	
carbon, linear law	220 Ω to 2,2 MΩ
carbon, logarithmic law	2200 Ω to 2,2 MΩ
cermet, linear law	220 Ω to 4,7 MΩ
Maximum dissipation at T_{amb} = 40 °C	
carbon, linear law	0,2 W
carbon, logarithmic law	0,1 W
cermet, linear law	1 to 3 W
Climatic category (IEC 68)	
carbon	25/070/10
cermet, versions with metal spindle	40/125/56
cermet, versions with plastic spindle or without spindle	25/070/56

DESCRIPTION

The potentiometer family can be divided into two groups:
- versions without spindle, to be activated by customized snap-in devices (survey 1);
- versions with one of many available spindle types (survey 2);

All versions can be supplied with either carbon or cermet resistance elements, fixed in a self extinguishing glass-fiber filled polycarbonate housing (black).

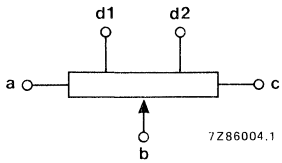

Fig. 1 Designation of terminals.

The carbon resistance element is a carbon track on a phenolic paper substrate; the cermet resistance element is Al_2O_3 substrate. The metallic multi-finger wiper is mounted in a plastic rotor. Terminals are designated as shown in Fig. 1 in accordance with IEC 393-1, sub-clause 4.5.

SURVEY 1, VERSIONS WITHOUT SPINDLE

				single vertical			
version				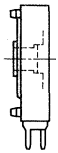	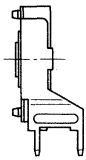 with bracket	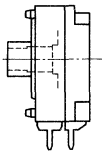 with battery switch	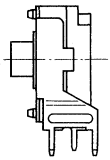 with bracket and battery switch
page number				84	86	88	
rotor		flat, snap-in		●	●		
		protruding, snap-in		●	●	●	●
		flat, slotted		X (1)			
terminal configuration		in-line		●	●	●	●
		staggered		●	●	● tap version	X tap version
type of terminal	vertical versions	spindle height	12,5 mm	●	●	●	●
			18,0 mm	X			
		solder tag		X			
	horizontal version						
optional		metal shield		X			
		plastic cover		X			

X = available
● = preferred.

(1) Used in versions with spindle.

single horizontal	tandem vertical				dual vertical
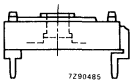	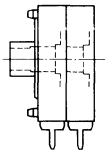	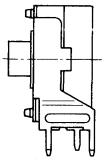 with bracket	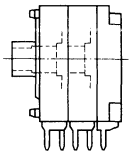 with battery switch	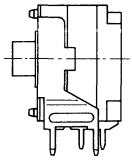 with bracket and battery switch	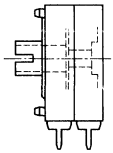
90	92	94	96		98
●					
●	●	●	●	●	X
X (1)					
●	●	●	●	●	X
	●	●	● tap versions	X tap versions	X
	●	●	●	●	X
	X				X
	X				X
●					
	X	X			X
	X	X			X

SURVEY 2, VERSIONS WITH SPINDLE

				single vertical	
version				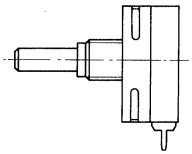	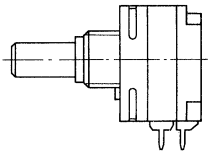 with battery switch
page number				100	103
bushing L = 8 mm (1)	M7	spindle dia. 4 mm	plastic	● (10)	● (10)
			metal	● (9)	● (9)
	M10	spindle dia. 6 mm	plastic	● (10)	● (10)
			metal	● (9)	● (9)
type of terminal (2)	vertical versions	spindle height	12,5 mm	●	●
			18,0 mm	X	
		solder tag		X	X
	horizontal version				
optional	slow-motion drive 4, 6: 1			X	
	centre detent (3), carbon only			X	
	metal shield			X	
	plastic cover			X	
	heatsink, cermet only			X	

X = available.
● = preferred.

(1) The figures between brackets give the number of spindle types.
(2) See sheet of relevant version for terminal configuration.
(3) More detents on request.

single horizontal	tandem vertical		dual vertical
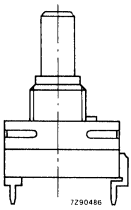	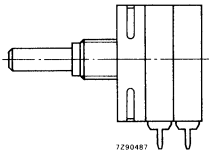	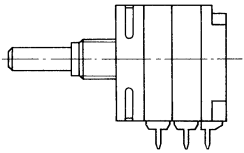 with battery switch	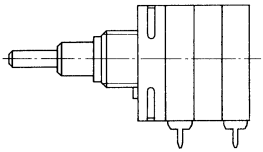
106	108	111	114
● (10)	● (10)	● (10)	
● (9)	● (9)	● (9)	X (1)
● (10)	● (10)	● (10)	
● (9)	● (9)	● (9)	X (1)
	●	●	X
	X	X	X
	X	X	X
●			
X	X		
X	X		X
	X		X
	X		X
	X		X

VERSION WITHOUT SPINDLE, SINGLE VERTICAL

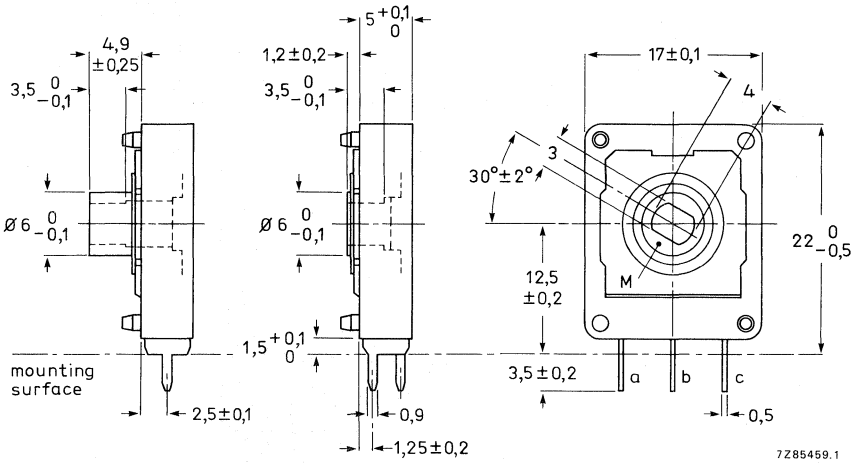

terminals in line, protruding rotor

staggered terminals, flat rotor

Rotor drawn at fully counter-clockwise position. M = mark for position of slider.
For other terminals see Fig. 18.

Hole patterns

For connection to printed-wiring boards with a grid pitch of 2,54 mm, viewed from component side.
Hole diameter 1,3 ± 0,05 mm.

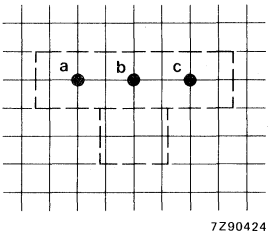

terminals in line

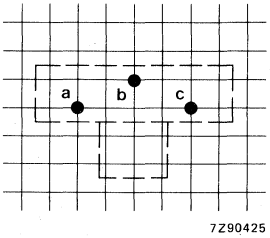

staggered terminals

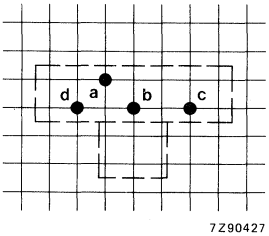

with one tap

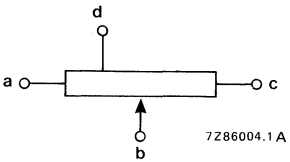

designation of terminals

Main properties

Climatic category (IEC 68)	carbon 25/070/10, cermet 25/070/56
Resistance range, E3 series	
carbon, linear (linearity 4%)	220 Ω to 2,2 MΩ, tolerance 20%
carbon, non-linear	2200 Ω to 2,2 MΩ, tolerance 20%
cermet, linear (linearity 4%)	220 Ω to 4,7 MΩ, tolerance 10%
Resistance law (see Fig. 19)	carbon A, B, C, H cermet A
Maximum dissipation at T_{amb} = 40 °C	
carbon, linear	0,2 W
carbon, non-linear	0,1 W
cermet, linear	1,25 W
Test voltage for 1 minute	500 V, 50 Hz
with plastic cover	1000 V, 50 Hz

For further information see Electrical Data and Mechanical Data.

Composition of the catalogue number, PP17 without spindle, single, vertical

2322 5.0 0. . . .

- code for element: 0 = carbon, 1 = cermet
- code for rotor: 0 = protruding rotor, 1 = flat rotor
- code for tags: 0 = tags in-line, 1 = tags staggered
- resistance code: Table for R_{nom}

R \ law	linear	logarithmic*	rev. logarithmic*	log. with tap
220 Ω	02	–	–	–
470 Ω	03	–	–	–
1 kΩ	04	–	–	–
2,2 kΩ	05	25	45	–
4,7 kΩ	06	26	46	–
10 kΩ	07	27	47	–
22 kΩ	08	28	48	–
47 kΩ	09	29	49	–
100 kΩ	11	31	51	–
220 kΩ	12	32	52	–
470 kΩ	13	33	53	–
1 MΩ	14	34	–	–
2,2 MΩ	15	35	–	–
4,7 MΩ	16	–	–	–

* carbon only.

Catalogue numbers for other versions on request.

VERSION WITHOUT SPINDLE, SINGLE VERTICAL WITH BRACKET

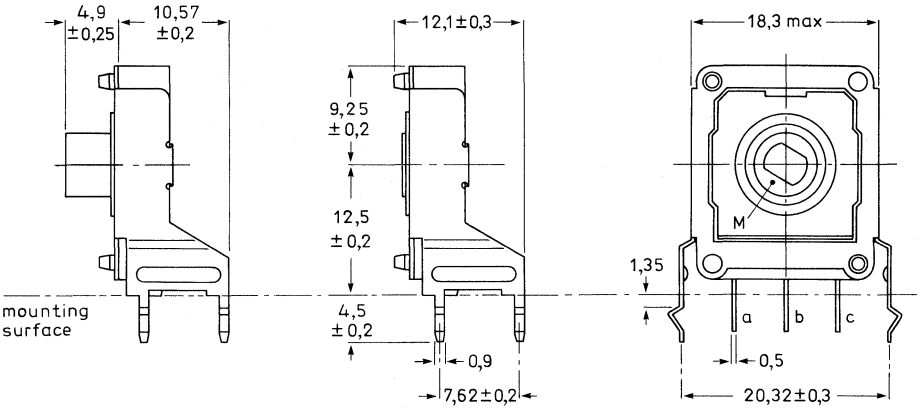

protruding rotor flat rotor

Rotor drawn at fully counter-clockwise position. M = mark for position of slider.

Hole patterns

For connection to printed-wiring boards with a grid pitch of 2,54 mm, viewed from component side. Hole diameter 1,3 ± 0,05 mm.

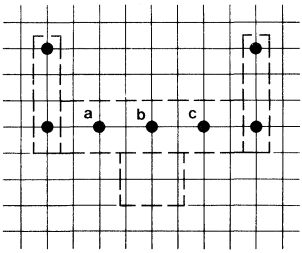

7Z90429

terminals in line

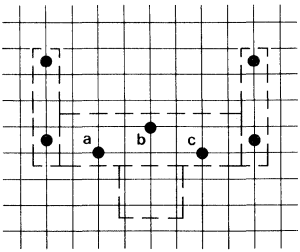

7Z90430

staggered terminals

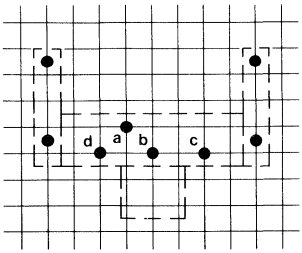

7Z90432

with one tap

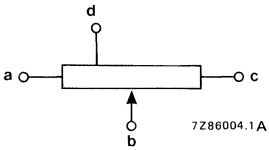

designation of terminals

Main properties

Climatic category (IEC 68)	carbon 25/070/10, cermet 25/070/56
Resistance range, E3 series	
carbon, linear (linearity 4%)	220 Ω to 2,2 MΩ, tolerance 20%
carbon, non-linear	2200 Ω to 2,2 MΩ, tolerance 20%
cermet, linear (linearity 4%)	220 Ω to 4,7 MΩ, tolerance 10%
Resistance law (see Fig. 19)	carbon A, B, C, H cermet A
Maximum dissipation at T_{amb} = 40 °C	
carbon, linear	0,2 W
carbon, non-linear	0,1 W
cermet, linear	1,25 W
Test voltage for 1 minute	500 V, 50 Hz
with plastic cover	1000 V, 50 Hz

For further information see Electrical Data and Mechanical Data.

Composition of the catalogue number, PP17 without spindle, single, vertical, with bracket

2322 5.0 0. . . .

- code for element
  - 0 = carbon
  - 1 = cermet
- code for rotor
  - 2 = protruding rotor
  - 3 = flat rotor
- code for tags
  - 0 = tags in-line
  - 1 = tags staggered
- resistance code
- Table for R_{nom}

R \ law	linear	logarithmic*	rev. logarithmic*	log. with tap
220 Ω	02	–	–	–
470 Ω	03	–	–	–
1 kΩ	04	–	–	–
2,2 kΩ	05	25	45	–
4,7 kΩ	06	26	46	–
10 kΩ	07	27	47	–
22 kΩ	08	28	48	–
47 kΩ	09	29	49	–
100 kΩ	11	31	51	–
220 kΩ	12	32	52	–
470 kΩ	13	33	53	–
1 MΩ	14	34	–	–
2,2 MΩ	15	35	–	–
4,7 MΩ	16	–	–	–

* carbon only.

Catalogue numbers for other versions on request.

VERSION WITHOUT SPINDLE, SINGLE VERTICAL WITH BATTERY SWITCH

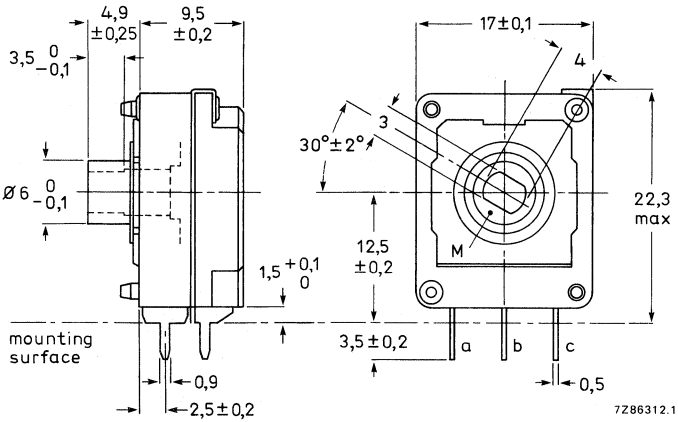

Rotor drawn at fully counter-clockwise position. M = mark for position of slider.

Hole patterns

For connection to printed-wiring boards with a grid pitch of 2,54 mm, viewed from component side. Hole diameter 1,3 ± 0,05 mm.

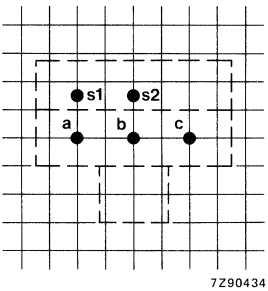

terminals in line

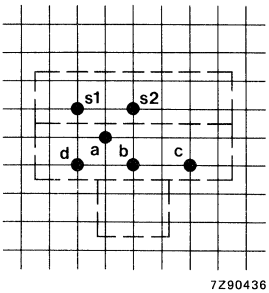

with one tap

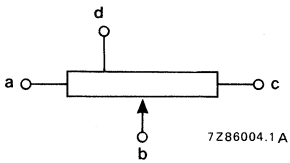

designation of terminals

Main properties

Climatic category (IEC 68)	carbon 25/070/10, cermet 25/070/56
Resistance range, E3 series	
carbon, linear (linarity 4%)	220 Ω to 2,2 MΩ, tolerance 20%
carbon, non-linear	2200 Ω to 2,2 MΩ, tolerance 20%
cermet, linear (linearity 4%)	220 Ω to 4,7 MΩ, tolerance 10%
Resistance law (see Fig. 19)	carbon A, B, C, H cermet A
Maximum dissipation at T_{amb} = 40 °C	
carbon, linear	0,2 W
carbon, non-linear	0,1 W
cermet, linear	1,25 W
Test voltage for 1 minute	500 V, 50 Hz

For further information see Electrical Data, Mechanical Data and Battery Switch.

Composition of the catalogue number, PP17 without spindle, single, vertical with switch

2322 5.0 100 . .

code for element
0 = carbon
1 = cermet

resistance code

Table for R_{nom}

R \ law	linear	logarithmic*	rev. logarithmic*	log. with tap
220 Ω	02	–	–	–
470 Ω	03	–	–	–
1 kΩ	04	–	–	–
2,2 kΩ	05	25	45	–
4,7 kΩ	06	26	46	–
10 kΩ	07	27	47	–
22 kΩ	08	28	48	–
47 kΩ	09	29	49	–
100 kΩ	11	31	51	–
220 kΩ	12	32	52	–
470 kΩ	13	33	53	–
1 MΩ	14	34	–	–
2,2 MΩ	15	35	–	–
4,7 MΩ	16	–	–	–

* carbon only.

Catalogue numbers for other versions on request.

VERSION WITHOUT SPINDLE, SINGLE HORIZONTAL

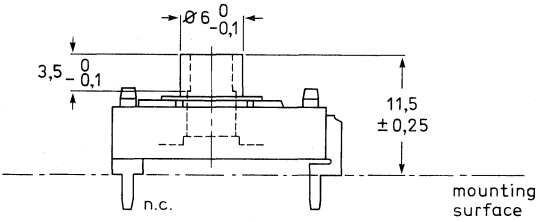

with protruding rotor

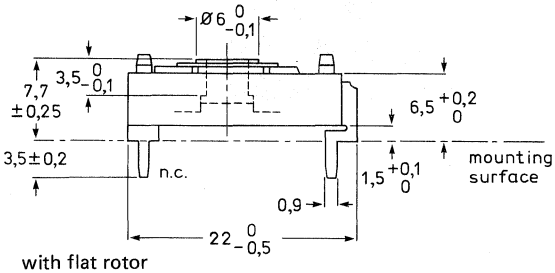

with flat rotor

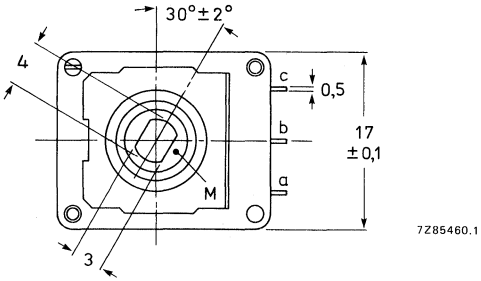

Rotor drawn at fully counter-clockwise position.
M = mark for position of slider.

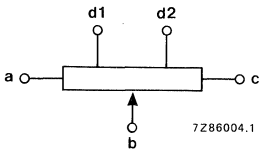

designation of terminals

Hole patterns

For connection to printed-wiring boards with a grid pitch of 2,54 mm, viewed from component side. Hole dia. 1,3 ± 0,05 mm.

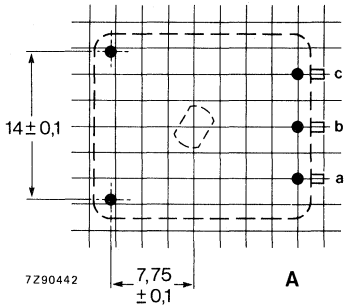

no tap

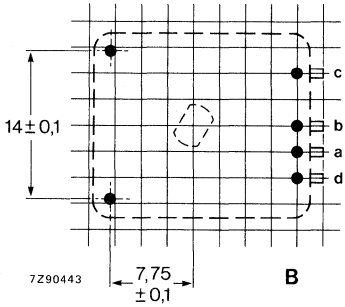

one tap

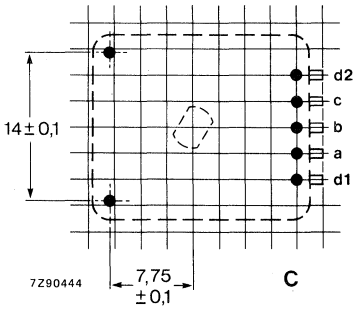

two taps

Main properties

Climatic category (IEC 68)	carbon 25/070/10, cermet 25/070/56
Resistance range, E3 series	
carbon, linear (linearity 4%)	220 Ω to 2,2 MΩ, tolerance 20%
carbon, non-linear	2200 Ω to 2,2 MΩ, tolerance 20%
cermet, linear (linearity 4%)	220 Ω to 4,7 MΩ, tolerance 10%
Resistance law (see Fig. 19)	carbon, A, B, C, H cermet A
Maximum dissipation at T_{amb} = 40 °C	
carbon, linear	0,2 W
carbon, non-linear	0,1 W
cermet, linear	1,25 W
Test voltage for 1 minute	500 V, 50 Hz

For further information see Electrical Data and Mechanical Data.

Composition of the catalogue number, PP17 without spindle, single, horizontal

2322 5.0 0.5. .

code for element
0 = carbon
1 = cermet

code for rotor
0 = protruding rotor
1 = flat rotor

resistance code

Table for R_{nom}

R \ law	linear	logarithmic*	rev. logarithmic*	log. with tap
220 Ω	02	–	–	–
470 Ω	03	–	–	–
1 kΩ	04	–	–	–
2,2 kΩ	05	25	45	–
4,7 kΩ	06	26	46	–
10 kΩ	07	27	47	–
22 kΩ	08	28	48	–
47 kΩ	09	29	49	–
100 kΩ	11	31	51	–
220 kΩ	12	32	52	–
470 kΩ	13	33	53	–
1 MΩ	14	34	–	–
2,2 MΩ	15	35	–	–
4,7 MΩ	16	–	–	–

* carbon only.

Catalogue numbers for other versions on request.

VERSION WITHOUT SPINDLE, TANDEM VERTICAL

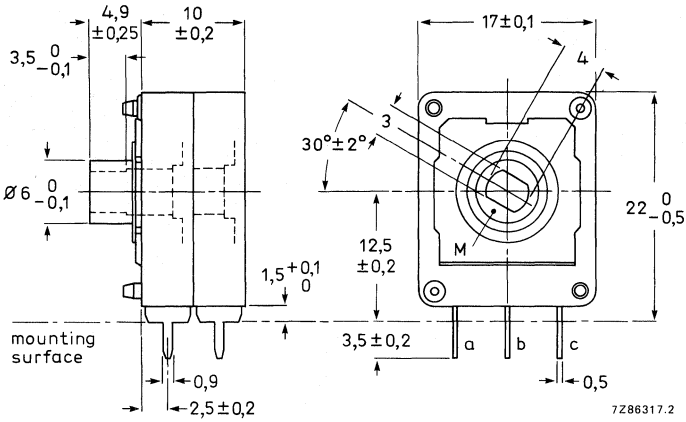

Rotor drawn at fully counter-clockwise position. M = mark for position of slider.

Hole patterns

For connection to printed-wiring boards with a grid pitch of 2,54 mm, viewed from component side. Hole diameter 1,3 ± 0,05 mm.

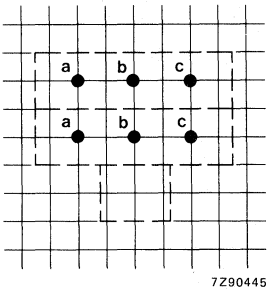

terminals in line

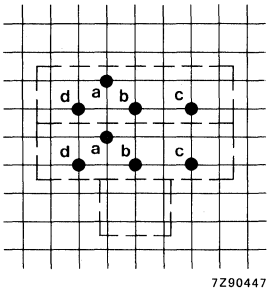

with one tap

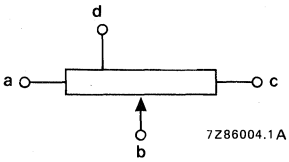

designation of terminals

Main properties

Climatic category (IEC 68)	carbon 25/070/10, cermet 25/070/56
Resistance range, E3 series	
carbon, linear (linearity 4%)	220 Ω to 2,2 MΩ, tolerance 20%
carbon, non-linear	2200 Ω to 2,2 MΩ, tolerance 20%
cermet, linear (linearity 4%)	220 Ω to 4,7 MΩ, tolerance 10%
Resistance law (see Fig. 19)	carbon A, B, C, H cermet A
Maximum dissipation at T_{amb} = 40 °C	
carbon, linear	0,2 + 0,2 W
carbon, non-linear	0,1 + 0,1 W
cermet, linear	1,25 + 1,25 W
Test voltage for 1 minute	500 V, 50 Hz

For further information see Electrical Data and Mechanical Data.

Composition of the catalogue number, PP17 without spindle, tandem, vertical

2322 5.0 050. .

code for element
0 = carbon
1 = cermet

resistance code

Table for R_{nom}

R \ law	linear	logarithmic*	rev. logarithmic*	log. with tap
220 Ω	02	–	–	–
470 Ω	03	–	–	–
1 kΩ	04	–	–	–
2,2 kΩ	05	25	45	–
4,7 kΩ	06	26	46	–
10 kΩ	07	27	47	–
22 kΩ	08	28	48	–
47 kΩ	09	29	49	–
100 kΩ	11	31	51	–
220 kΩ	12	32	52	–
470 kΩ	13	33	53	–
1 MΩ	14	34	–	–
2,2 MΩ	15	35	–	–
4,7 MΩ	16	–	–	–

* carbon only.

Catalogue numbers for other versions on request.

VERSION WITHOUT SPINDLE, TANDEM VERTICAL WITH BRACKET

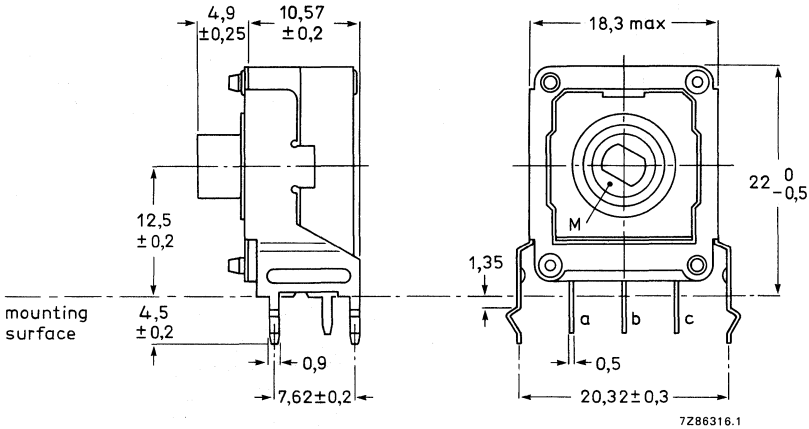

Rotor at fully counter-clockwise position. M = mark for position of slider.

Hole patterns

For connection to printed-wiring boards with a grid pitch of 2,54 mm, viewed from component side. Hole diameter 1,3 ± 0,05 mm.

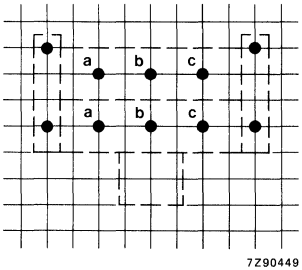

terminals in line

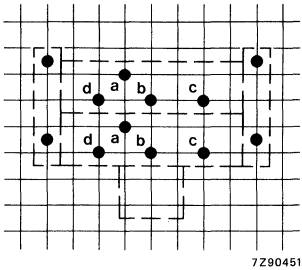

with one tap

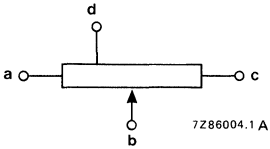

designation of terminals

Main properties

Climatic category (IEC 68)	carbon 25/070/10, cermet 25/070/56
Resistance range, E3 series	
carbon, linear (linearity 4%)	220 Ω to 2,2 MΩ, tolerance 20%
carbon, non-linear	2200 Ω to 2,2 MΩ, tolerance 20%
cermet, linear (linearity 4%)	220 Ω to 4,7 MΩ, tolerance 10%
Resistance law (see Fig. 19)	carbon A, B, C, H cermet A
Maximum dissipation at T_{amb} = 40 °C	
carbon, linear	0,2 + 0,2 W
carbon, non-linear	0,1 + 0,1 W
cermet, linear	1,25 + 1,25 W
Test voltage for 1 minute	500 V, 50 Hz

For further information see Electrical Data and Mechanical Data.

Composition of the catalogue number, PP17 without spindle, tandem, vertical with bracket

2322 5.0 070. .

code for element
0 = carbon
1 = cermet

resistance code

Table for R_{nom}

R \ law	linear	logarithmic*	rev. logarithmic*	log. with tap
220 Ω	02	–	–	–
470 Ω	03	–	–	–
1 kΩ	04	–	–	–
2,2 kΩ	05	25	45	–
4,7 kΩ	06	26	46	–
10 kΩ	07	27	47	–
22 kΩ	08	28	48	–
47 kΩ	09	29	49	–
100 kΩ	11	31	51	–
220 kΩ	12	32	52	–
470 kΩ	13	33	53	–
1 MΩ	14	34	–	–
2,2 MΩ	15	35	–	–
4,7 MΩ	16	–	–	–

* carbon only.

Catalogue numbers for other versions on request.

VERSION WITHOUT SPINDLE, TANDEM VERTICAL WITH BATTERY SWITCH

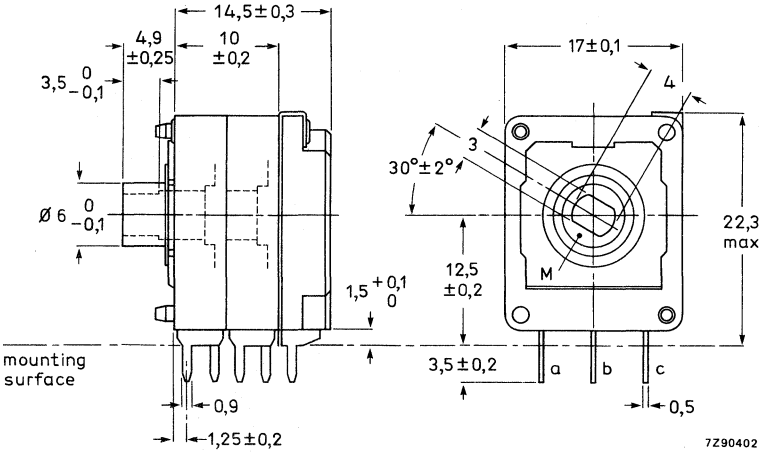

Rotor at fully counter-clockwise position. M = mark for position of slider.

Hole patterns

For connection to printed-wiring boards with a grid pitch of 2,54 mm, viewed from component side. Hole diameter 1,3 ± 0,05 mm.

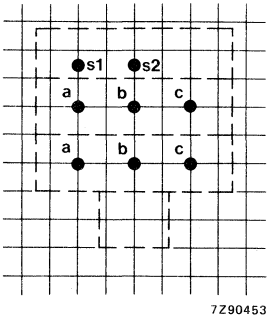

terminals in line

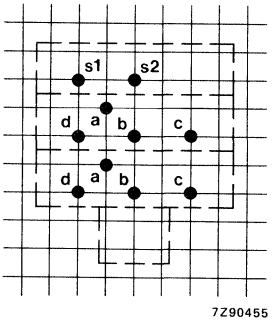

with one tap

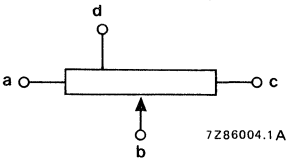

designation of terminals

Main properties

Climatic category (IEC 68)	carbon 25/070/10, cermet 25/070/56
Resistance range, E3 series	
carbon, linear (linearity 4%)	220 Ω to 2,2 MΩ, tolerance 20%
carbon, non-linear	2200 Ω to 2,2 MΩ, tolerance 20%
cermet, linear (linearity 4%)	220 Ω to 4,7 MΩ, tolerance 10%
Resistance law (see Fig. 19)	carbon, A, B, C, H cermet A
Maximum dissipation at T_{amb} = 40 °C	
carbon, linear	0,2 + 0,2 W
carbon, non-linear	0,1 + 0,1 W
cermet, linear	1,25 + 1,25 W
Test voltage for 1 minute	500 V, 50 Hz

For further information see Electrical Data, Mechanical Data and Battery Switch.

Composition of the catalogue number, PP17 without spindle, tandem, vertical with switch

2322 5.0 500. .

code for element

0 = carbon
1 = cermet

resistance code

Table for R_{nom}

R \ law	linear	logarithmic*	rev. logarithmic*	log. with tap
220 Ω	02	–	–	–
470 Ω	03	–	–	–
1 kΩ	04	–	–	–
2,2 kΩ	05	25	45	–
4,7 kΩ	06	26	46	–
10 kΩ	07	27	47	–
22 kΩ	08	28	48	–
47 kΩ	09	29	49	–
100 kΩ	11	31	51	–
220 kΩ	12	32	52	–
470 kΩ	13	33	53	–
1 MΩ	14	34	–	–
2,2 MΩ	15	35	–	–
4,7 MΩ	16	–	–	–

* carbon only.

Catalogue numbers for other versions on request.

VERSION WITHOUT SPINDLE, DUAL VERTICAL

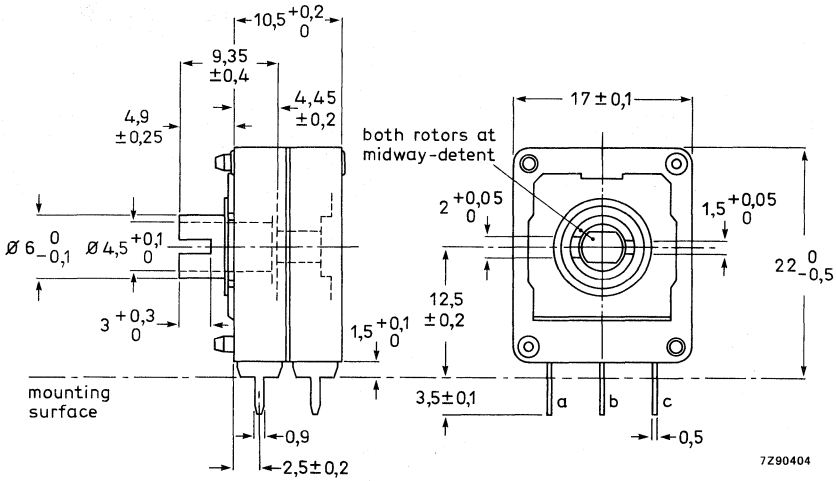

Both rotors at mid-position.

Hole pattern

For connection to printed-wiring boards with a grid pitch of 2,54 mm, viewed from component side. Hole diameter 1,3 ± 0,05 mm.

Dual potentiometers with tap on request.

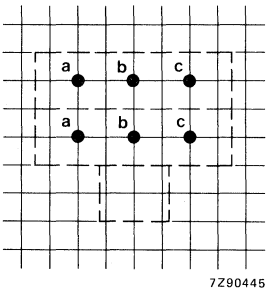

terminals in line

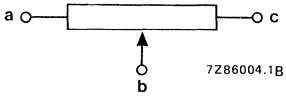

designation of terminals

Main properties

Climatic category (IEC 68)	carbon 25/070/10, cermet 25/070/56
Resistance range, E3 series	
carbon, linear (linearity 4%)	220 Ω to 2,2 MΩ, tolerance 20%
carbon, non-linear	2200 Ω to 2,2 MΩ, tolerance 20%
cermet, linear (linearity 4%)	220 Ω to 4,7 MΩ, tolerance 10%
Resistance law (see Fig. 19)	carbon, A, B, C, H cermet A
Maximum dissipation at T_{amb} = 40 °C	
carbon, linear	0,2 + 0,2 W
carbon, non-linear	0,1 + 0,1 W
cermet, linear	1,25 + 1,25 W
Test voltage for 1 minute	500 V, 50 Hz

For further information see Electrical Data and Mechanical Data.

Catalogue number

On request.

VERSION WITH SPINDLE, SINGLE VERTICAL

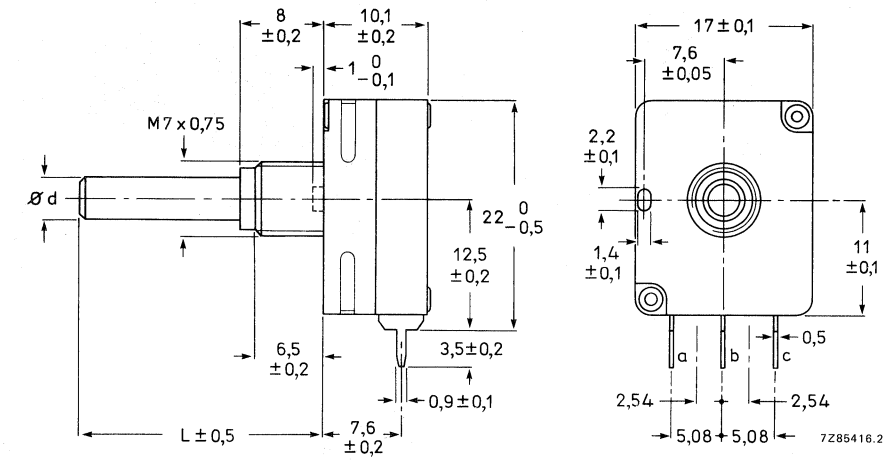

with mounting bush M7 x 0,75 mm.

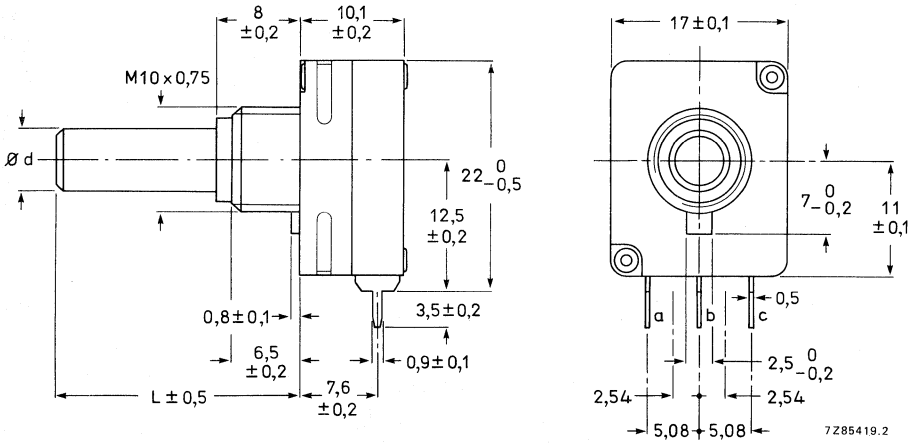

with mounting bush M10 x 0,75 mm.

For dimensions d and L see under Spindles. For other terminals see Fig. 18.

Hole patterns

For connection to printed-wiring boards with a grid pitch of 2,54 mm, viewed from component side.
Hole diameter 1,3 ± 0,05 mm.

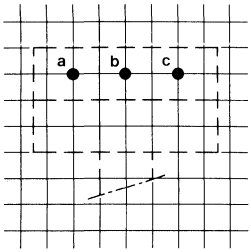

terminals in line

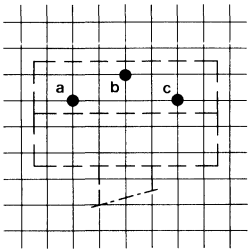

staggered terminals

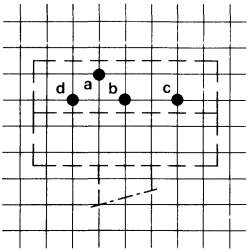

with one tap

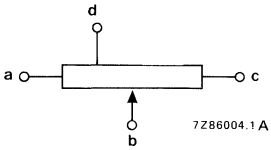

designation of terminals

Main properties

Climatic category (IEC 68)	metal spindle	carbon 25/070/10, cermet 40/125/56
	plastic spindle	carbon 25/070/10, cermet 25/070/56
Resistance range, E3 series		
carbon, linear (linearity 4%)		220 Ω to 2,2 MΩ, tolerance 20%
carbon, non-linear		2200 Ω to 2,2 MΩ, tolerance 20%
cermet, linear (linearity 4%)		220 Ω to 4,7 MΩ, tolerance 10%
Resistance law (see Fig. 19)		carbon A, B, C, H cermet A
Maximum dissipation at T_{amb} = 40 °C		
carbon, linear		0,2 W
carbon, non-linear		0,1 W
cermet, linear		2 W } metal spindle, 1 W } plastic spindle
cermet, with heatsink		3 W } metal spindle, 2 W } plastic spindle
Test voltage for 1 minute		500 V, 50 Hz
with plastic cover		1000 V, 50 Hz

For further information see Electrical Data and Mechanical Data.

Composition of the catalogue number, PP17 with spindle, single, vertical

2322 5.1 0. . . .

code for element
0 = carbon
1 = cermet

code for bushing; spindle dia. and material
0 = M10; dia. 6, plastic
2 = M7; dia. 4, plastic
5 = M10; dia. 6, metal
7 = M7; dia. 4, metal

resistance code

code for configuration of tags; spindle length and type
0 = in-line; 20, plain
1 = in-line; 30, plain
2 = in-line; 20, flat
3 = in-line; 30, flat
5 = staggered; 20, plain
6 = staggered; 30, plain
7 = staggered; 20, flat
8 = staggered; 30, flat

Table for R_{nom}

R \ law	linear	logarithmic*	rev. logarithmic*	log. with tap*
220 Ω	02	–	–	–
470 Ω	03	–	–	–
1 kΩ	04	–	–	–
2,2 kΩ	05	25	45	–
4,7 kΩ	06	26	46	–
10 kΩ	07	27	47	–
22 kΩ	08	28	48	–
47 kΩ	09	29	49	–
100 kΩ	11	31	51	–
220 kΩ	12	32	52	–
470 kΩ	13	33	53	–
1 MΩ	14	34	–	–
2,2 MΩ	15	35	–	–
4,7 MΩ	16	–	–	–

* carbon only.

Catalogue numbers for other versions on request.

VERSION WITH SPINDLE, SINGLE VERTICAL WITH BATTERY SWITCH

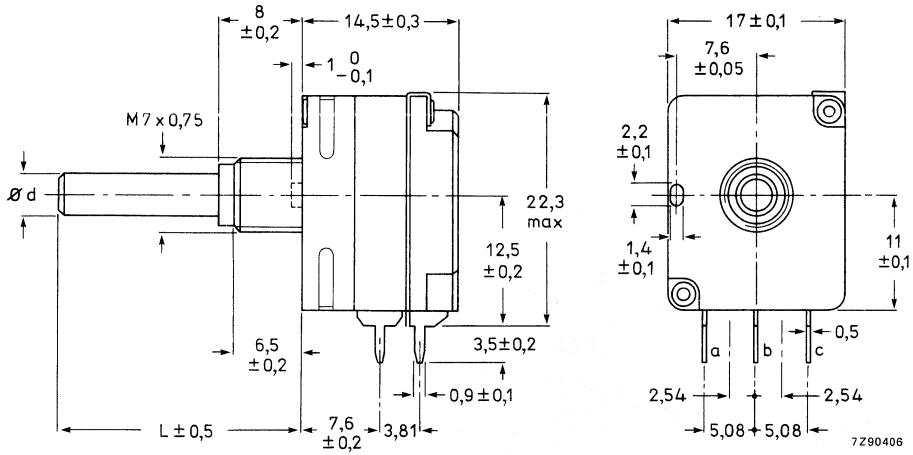

with mounting bush M7 x 0,75 mm.

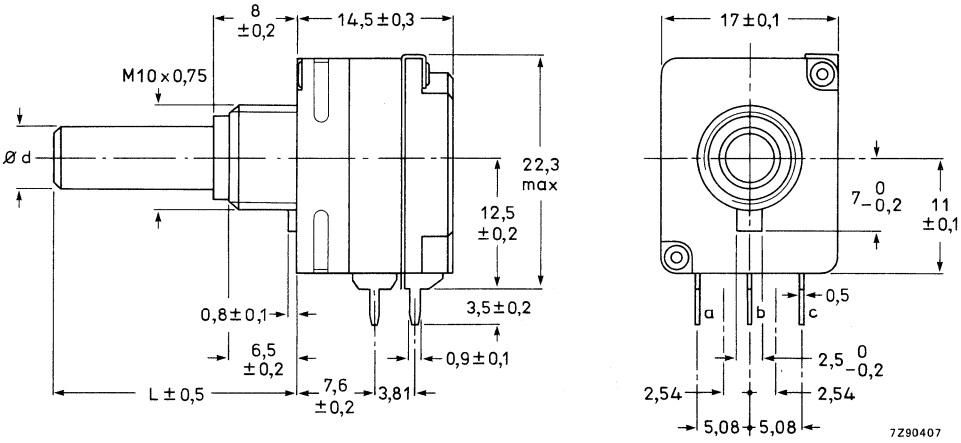

with mounting bush M10 x 0,75 mm.

For dimensions d and L see under Spindles. For other terminals see Fig. 18.

Hole patterns

For connection to printed-wiring boards with a grid pitch of 2,54 mm, viewed from component side.
Hole diameter 1,3 ± 0,05 mm.

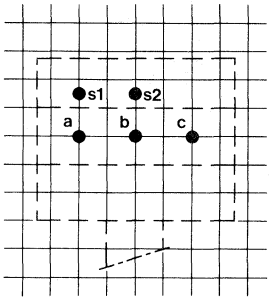

7Z90466

without tap

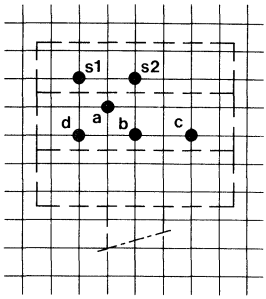

7Z90468

with one tap

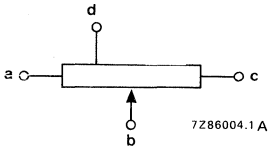

designation of terminals

Main properties

Climatic category (IEC 68)	metal spindle	carbon 25/070/10, cermet 40/125/56
	plastic spindle	carbon 25/070/10, cermet 25/070/56
Resistance range, E3 series		
carbon, linear (linearity 4%)		220 Ω to 2,2 MΩ, tolerance 20%
carbon, non-linear		2200 Ω to 2,2 MΩ, tolerance 20%
cermet, linear (linearity 4%)		220 Ω to 4,7 MΩ, tolerance 10%
Resistance law (see Fig. 19)		carbon A, B, C, H cermet A
Maximum dissipation at T_{amb} = 40 °C		
carbon, linear		0,2 W
carbon, non-linear		0,1 W
cermet, linear		1,25 W (metal spindle), 1 W (plastic spindle)
Test voltage for 1 minute		500 V, 50 Hz

For extended data see under Electrical Data, Mechanical Data and Battery Switch.

Composition of the catalogue number, PP17 with spindle, single, vertical with switch

2322 5.1 1. . . .

code for element
0 = carbon
1 = cermet

code for bushing; spindle dia. and material
0 = M10; dia. 6, plastic
2 = M7; dia. 4, plastic
5 = M10; dia. 6, metal
7 = M7; dia. 4, metal

resistance code

code for configuration of tags; spindle length and type
0 = in-line; 20, plain
1 = in-line; 30, plain
2 = in-line; 20, flat
3 = in-line; 30, flat

Table for R_{nom}

R \ law	linear	logarithmic*	rev. logarithmic*	log. with tap*
220 Ω	02	–	–	–
470 Ω	03	–	–	–
1 kΩ	04	–	–	–
2,2 kΩ	05	25	45	–
4,7 kΩ	06	26	46	–
10 kΩ	07	27	47	–
22 kΩ	08	28	48	–
47 kΩ	09	29	49	–
100 kΩ	11	31	51	–
220 kΩ	12	32	52	–
470 kΩ	13	33	53	–
1 MΩ	14	34	–	–
2,2 MΩ	15	35	–	–
4,7 MΩ	16	–	–	–

* carbon only.

Catalogue numbers for other versions on request.

VERSION WITH SPINDLE, SINGLE HORIZONTAL

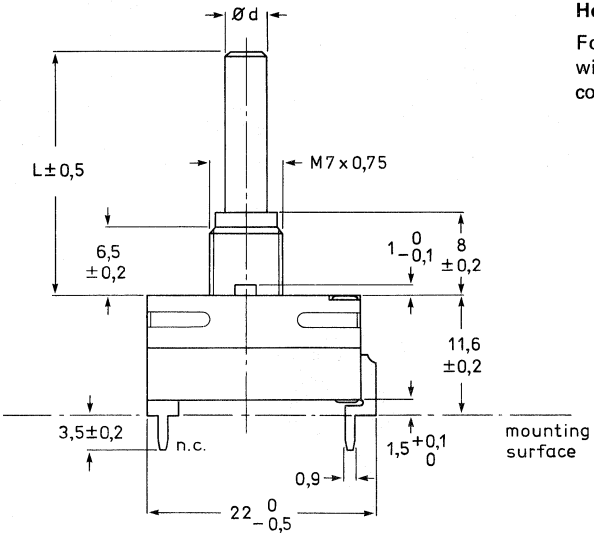

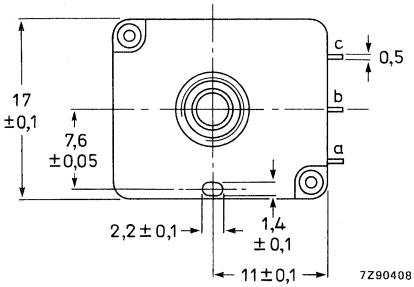

with mounting bush M7 x 0,75 mm.

For dimensions d and L see under Spindles.

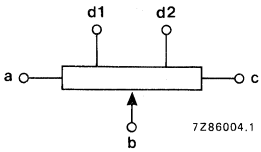

designation of terminals

Hole patterns

For connection to printed-wiring boards with a grid pitch of 2,54 mm, viewed from component side. Hole dia. 1,3 ± 0,05 mm.

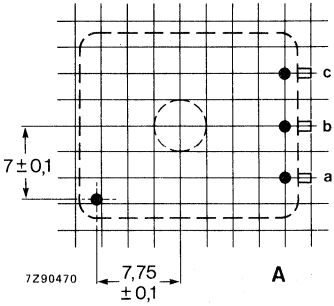

no tap

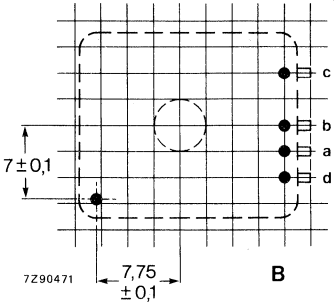

one tap

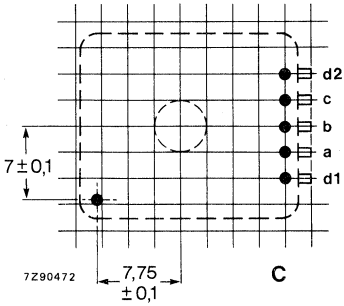

two taps

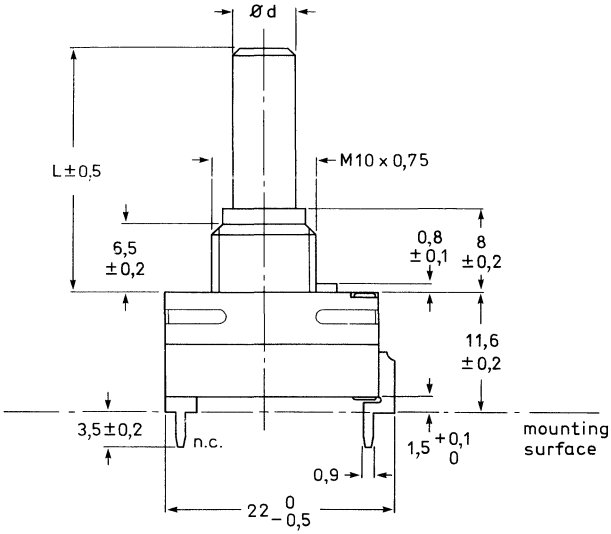

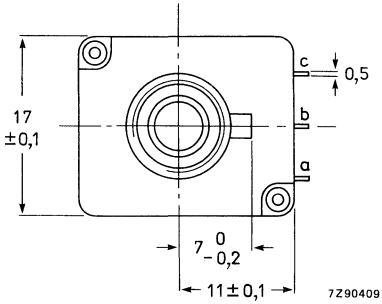

with mounting bush
M10 x 0,75 mm.

Main properties

Climatic category	metal spindle	carbon 25/070/10, cermet 40/125/56
	plastic spindle	carbon 25/070/10, cermet 25/070/56
Resistance range, E3 series		
carbon, linear (linearity 4%)		220 Ω to 2,2 MΩ, tolerance 20%
carbon, non-linear		2200 Ω to 2,2 MΩ, tolerance 20%
cermet, linear (linearity 4%)		220 Ω to 4,7 MΩ, tolerance 10%
Resistance law (see Fig. 19)		carbon A, B, C, H cermet A
Maximum dissipation at T_{amb} = 40 °C		
carbon, linear		0,2 W
carbon, non-linear		0,1 W
cermet, linear		2 W (metal spindle), 1 W (plastic spindle)
Test voltage for 1 minute		500 V, 50 Hz

For further information see Electrical Data and Mechanical Data.

Catalogue numbers:

On request.

VERSIONS WITH SPINDLE, TANDEM VERTICAL

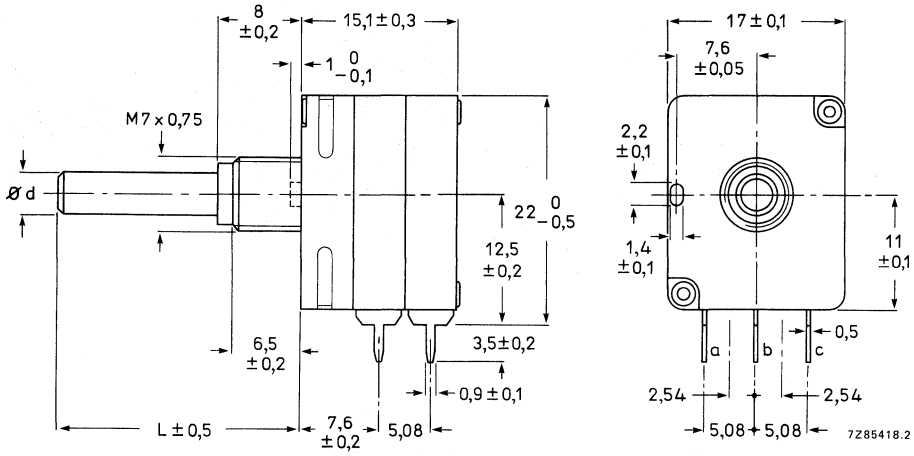

with mounting bush M7 x 0,75 mm.

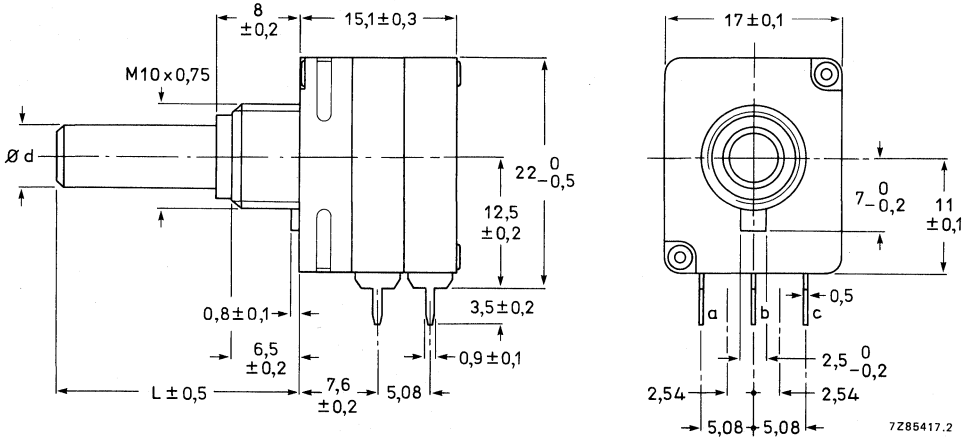

with mounting bush M10 x 0,75 mm.

For dimensions d and L see under Spindles.

Hole patterns

For connection to printed-wiring boards with a grid pitch of 2,54 mm, viewed from component side.
Hole diameter 1,3 ± 0,05 mm.

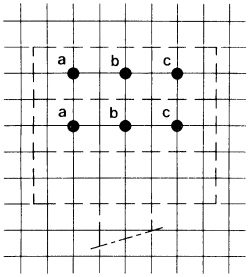

terminals in line

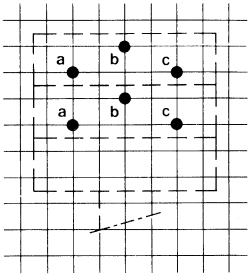

staggered terminals

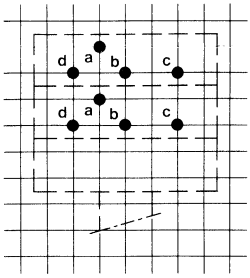

with one tap

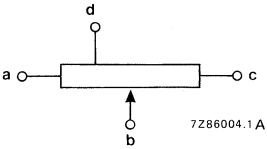

designation of terminals

Main properties

Climatic category (IEC 68)	metal spindle	carbon 25/070/10, cermet 40/125/56
	plastic spindle	carbon 25/070/10, cermet 25/070/56
Resistance range, E3 series		
carbon, linear (linearity 4%)		220 Ω to 2,2 MΩ, tolerance 20%
carbon, non-linear		2200 Ω to 2,2 MΩ, tolerance 20%
cermet, linear (linearity 4%)		220 Ω to 4,7 MΩ, tolerance 10%
Resistance law (see Fig. 19)		carbon A, B, C, H cermet A
Maximum dissipation at T_{amb} = 40 °C		
carbon, linear		0,2 + 0,2 W
carbon, non-linear		0,1 + 0,1 W
cermet, linear		1,25 + 1,25 W | metal spindle: 1 + 1 W; plastic spindle: 1,5 + 1,5 W
cermet, with heatsink		2 + 2 W
Test voltage for 1 minute		500 V, 50 Hz

For further information see Electrical Data and Mechanical Data.

Composition of the catalogue number, PP17 with spindle, tandem, vertical

2322 5.2 0. . . .

code for element
0 = carbon
1 = cermet

code for bushing; spindle dia. and material
0 = M10; dia. 6, plastic
2 = M7; dia. 4, plastic
5 = M10; dia. 6, metal
7 = M7; dia. 4, metal

resistance code

code for configuration of tags; spindle length and type
0 = in-line; 20, plain
1 = in-line; 30, plain
2 = in-line; 20, flat
3 = in-line; 30, flat
5 = staggered; 20, plain
6 = staggered; 30, plain
7 = staggered; 20, flat
8 = staggered; 30, flat

Table for R_{nom}

R \ law	linear	logarithmic*	rev. logarithmic*	log. with tap*
220 Ω	02	–	–	–
470 Ω	03	–	–	–
1 kΩ	04	–	–	–
2,2 kΩ	05	25	45	–
4,7 kΩ	06	26	46	–
10 kΩ	07	27	47	–
22 kΩ	08	28	48	–
47 kΩ	09	29	49	–
100 kΩ	11	31	51	–
220 kΩ	12	32	52	–
470 kΩ	13	33	53	–
1 MΩ	14	34	–	–
2,2 MΩ	15	35	–	–
4,7 MΩ	16	–	–	–

* carbon only.

Catalogue numbers for other versions on request.

VERSIONS WITH SPINDLE, TANDEM VERTICAL WITH BATTERY SWITCH

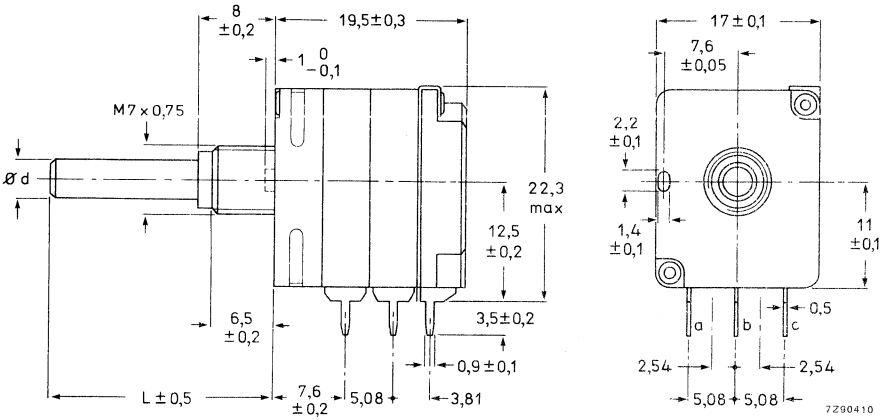

with mounting bush M7 x 0,75 mm.

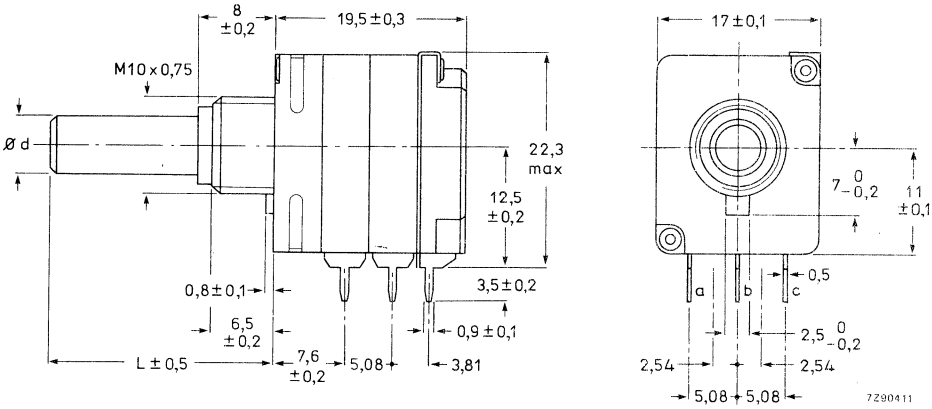

with mounting bush M10 x 0,75 mm.

For dimensions d and L see under Spindles.

Hole patterns

For connection to printed-wiring boards with a grid pitch of 2,54 mm, viewed from component side.

staggered terminals

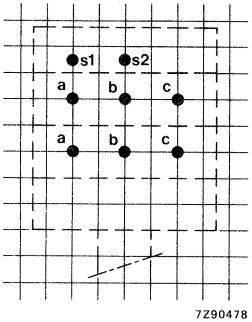

no tap

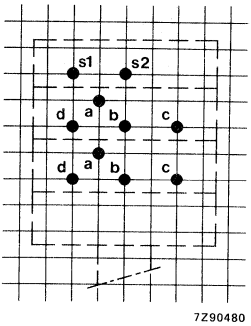

with one tap

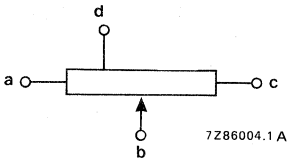

designation of terminals

Main properties

Climatic category (IEC 68)	metal spindle	carbon 25/070/10, cermet 40/125/56
	plastic spindle	carbon 25/070/10, cermet 25/070/56
Resistance range, E3 series		
carbon, linear (linearity 4%)		220 Ω to 2,2 MΩ, tolerance 20%
carbon, non-linear		2200 Ω to 2,2 MΩ, tolerance 20%
cermet, linear (linearity 4%)		220 Ω to 4,7 MΩ, tolerance 10%
Resistance law (see Fig. 19)		carbon A, B, C, H cermet A
Maximum dissipation at T_{amb} = 40 °C		
carbon, linear		0,2 + 0,2 W
carbon, non-linear		0,1 + 0,1 W
cermet, linear		1,25 + 1,25 (metal spindle), 1 + 1 W (plastic spindle)
Test voltage for 1 minute		500 V, 50 Hz

For further information see Electrical Data, Mechanical Data and Battery Switch.

Composition of the catalogue number, PP17 with spindle, tandem, vertical with switch

2322 5.1 1. . . .

code for element
0 = carbon
1 = cermet

code for bushing; spindle dia. and material
0 = M10; dia. 6, plastic
2 = M7; dia. 4, plastic
5 = M10; dia. 6, metal
7 = M7; dia. 4, metal

resistance code

code for configuration of tags; spindle length and type
0 = in-line; 20, plain
1 = in-line; 30, plain
2 = in-line; 20, flat
3 = in-line; 30, flat

Table for R_{nom}

R \ law	linear	logarithmic*	rev. logarithmic*	log. with tap*
220 Ω	02	–	–	–
470 Ω	03	–	–	–
1 kΩ	04	–	–	–
2,2 kΩ	05	25	45	–
4,7 kΩ	06	26	46	–
10 kΩ	07	27	47	–
22 kΩ	08	28	48	–
47 kΩ	09	29	49	–
100 kΩ	11	31	51	–
220 kΩ	12	32	52	–
470 kΩ	13	33	53	–
1 MΩ	14	34	–	–
2,2 MΩ	15	35	–	–
4,7 MΩ	16	–	–	–

* carbon only.

Catalogue numbers for other versions on request.

VERSIONS WITH SPINDLE, DUAL VERTICAL

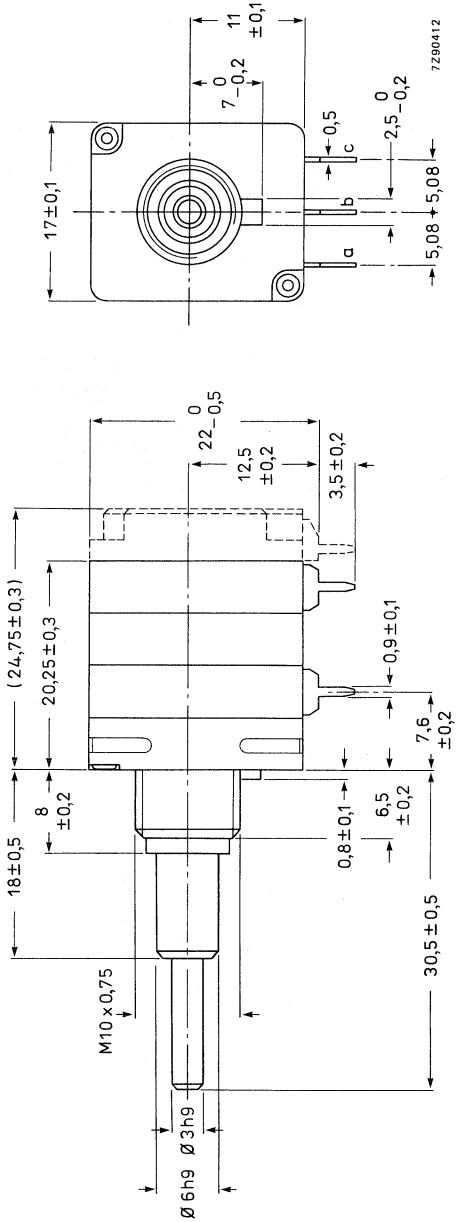

Hole patterns

For connection to printed-wiring boards with a grid pitch of 2,54 mm, viewed from component side.
Hole diameter 1,3 ± 0,05 mm.

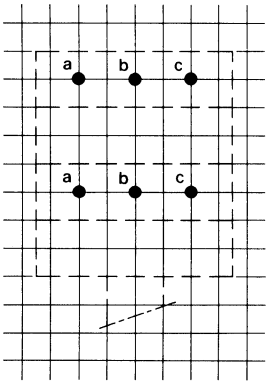

7Z90482

without switch

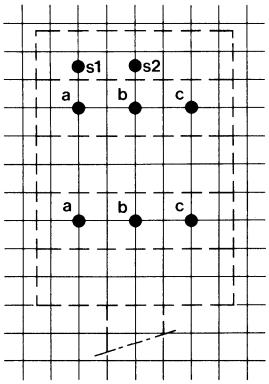

7Z90483

with switch

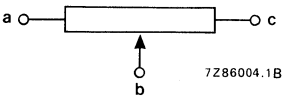

designation of terminals

Main properties

Climatic category (IEC 68)	carbon 25/070/10, cermet 25/070/56
Resistance range, E3 series	
carbon, linear (linearity 4%)	220 Ω to 2,2 MΩ, tolerance 20%
carbon, non-linear	2200 Ω to 2,2 MΩ, tolerance 20%
cermet, linear (linearity 4%)	220 Ω to 4,7 MΩ, tolerance 10%
Resistance law (see Fig. 19)	carbon A, B, C, H cermet A
Maximum dissipation at T_{amb} = 40 °C	
carbon, linear	0,2 + 0,2 W
carbon, non-linear	0,1 + 0,1 W
cermet, linear	1,25 + 1,25 W (metal spindle), 1 + 1 W (plastic spindle)
Test voltage for 1 minute	500 V, 50 Hz

For further information see Electrical Data, Mechanical Data and Battery Switch.

Catalogue number

On request.

BUILDING ELEMENTS FOR POTENTIOMETERS WITHOUT SPINDLE (Survey 1)

Potentiometer with flat rotor, snap-in type

To be used with snap-in actuating devices, see Fig. 6. Cannot be combined with other PP17 potentiometers and switches.

Maximum axial force	20 N
if mechanically supported, e.g. by mounting bracket	80 N

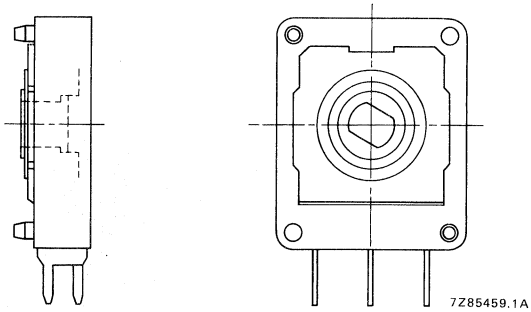

Fig. 4.

Potentiometer with protruding rotor, snap-in type

To be used with snap-in actuating devices, see Fig. 6. Can be combined with another PP17 potentiometer and/or switch.

Maximum axial force	20 N
if mechanically supported, e.g. by mounting bracket	80 N

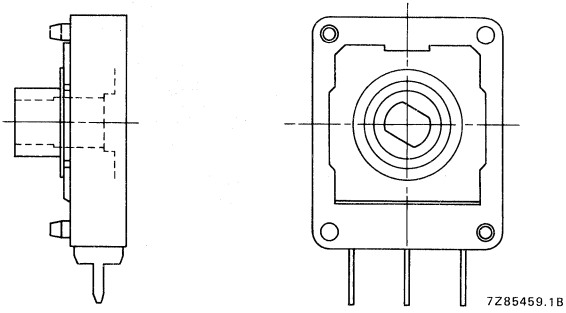

Fig. 5.

Actuating device

Figure 6 shows the snap-in part of a plastic actuating device. Actuating devices are not supplied.

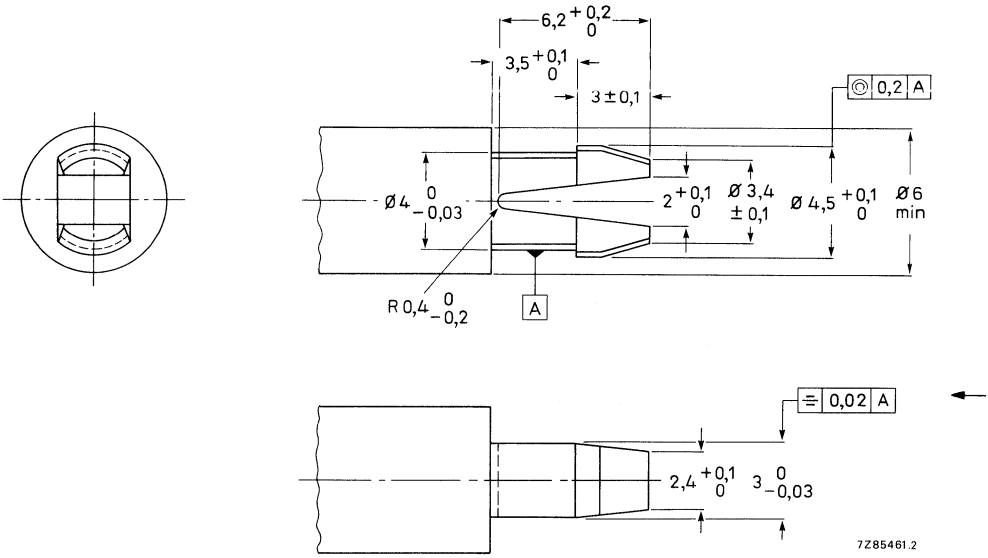

Fig. 6.

Mounting bracket

For extra stability of single vertical or tandem vertical potentiometers. Use of this bracket permits an axial force of maximum 80 N to the potentiometers opposite.

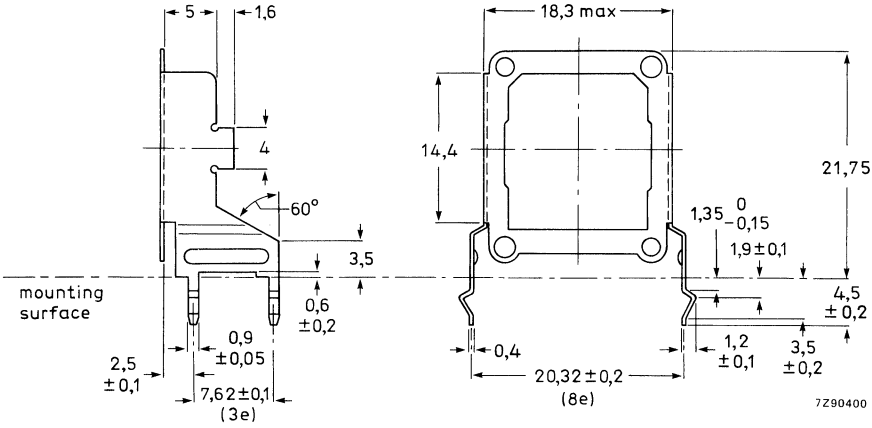

Fig. 7.

BUILDING ELEMENTS FOR POTENTIOMETERS WITH SPINDLE (Survey 2)

Potentiometer with flat rotor, slotted type

To be used with spindle as single or tandem potentiometer. Cannot be combined with a switch.

Maximum axial force 20 N

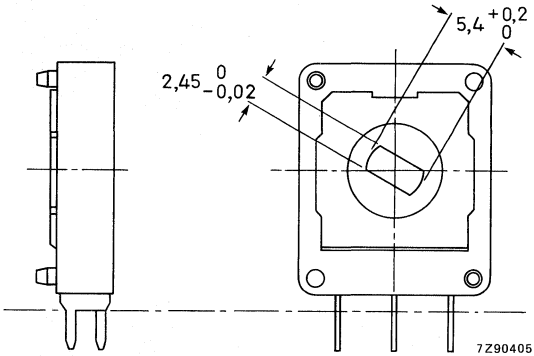

Fig. 8.

Detents

A detent spring can be mounted in the bearing bush of the spindle to provide the potentiometer with a centre detent. More detents on request.

Heatsink

Zinc heatsinks are available to increase the maximum permissible dissipation of cermet potentiometers. They can be added to single potentiometers and to both potentiometers of a tandem version.

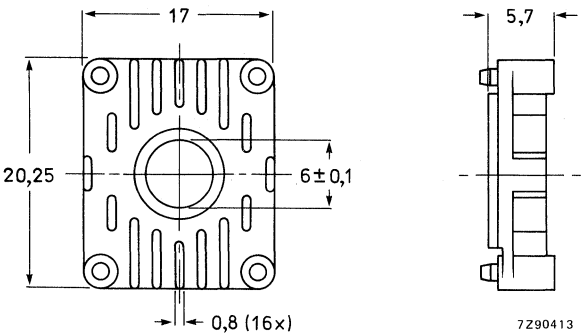

Fig. 9.

Slow-motion drive

For fine adjustment. Gear ratio 4,6 : 1 and 7 : 1. (Other spindles on request.)

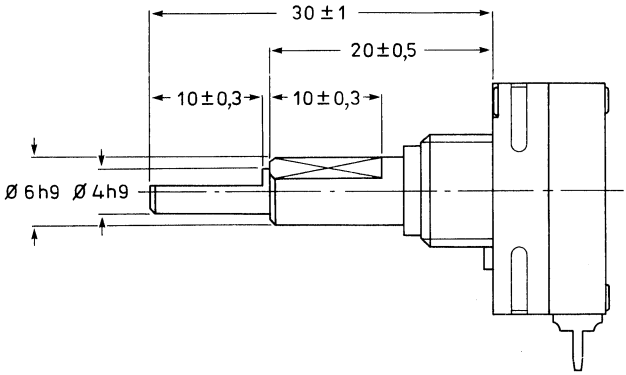

side view

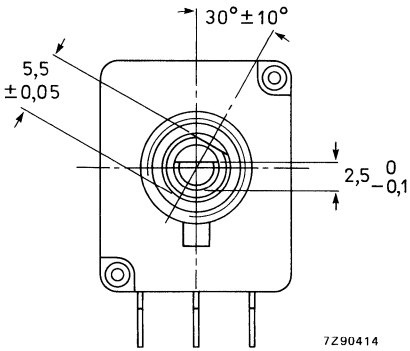

front view

Fig. 10.

Spindles, metal or plastic, M7 bushing

CCW position	L mm	L_1 mm	d metal	d plastic
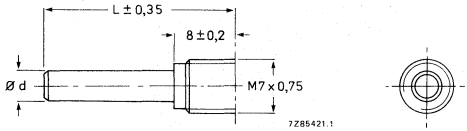 Fig. 11a.	15		4h9	$4^{0}_{-0,1}$
	20		4h9	$4^{0}_{-0,1}$
	25		4h9	$4^{0}_{-0,1}$
	30		4h9	$4^{0}_{-0,1}$
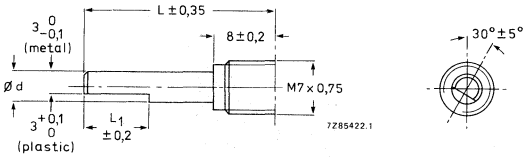 Fig. 11b.	15	3,0	4h9	$4^{0}_{-0,1}$
	20	7,5	4h9	$4^{0}_{-0,1}$
	25	8,5	4h9	$4^{0}_{-0,1}$
	30	8,5	4h9	$4^{0}_{-0,1}$
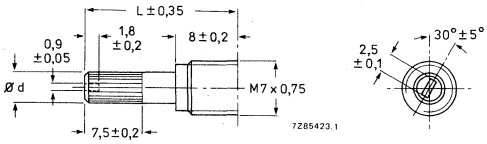 Fig. 11c.	20			$4^{0}_{-0,1}$
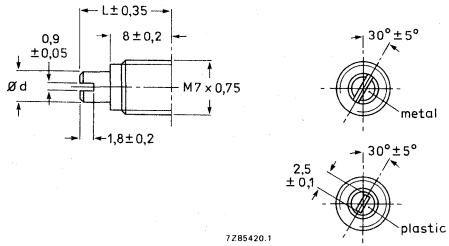 Fig. 11d.	12		4h9	$4^{0}_{-0,1}$

Spindles, metal or plastic, M10 bushing

CCW position	L mm	L_1 mm	d metal	d plastic
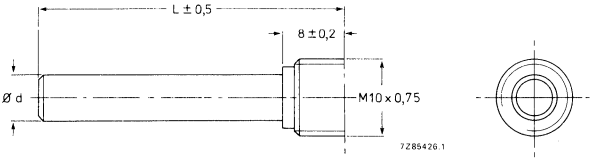	20		6h9	$6^{0}_{-0,1}$
	30		6h9	$6^{0}_{-0,1}$
	40		6h9	$6^{0}_{-0,1}$
	60		6h9	$6^{0}_{-0,1}$
Fig. 12a.				
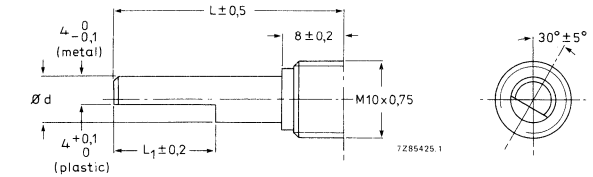	20	7,5	6h9	$6^{0}_{-0,1}$
	30	13,5	6h9	$6^{0}_{-0,1}$
	60	13,5	6h9	$6^{0}_{-0,1}$
Fig. 12b.				
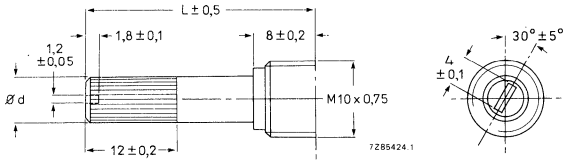	30			$6^{0}_{-0,1}$
Fig. 12c.				
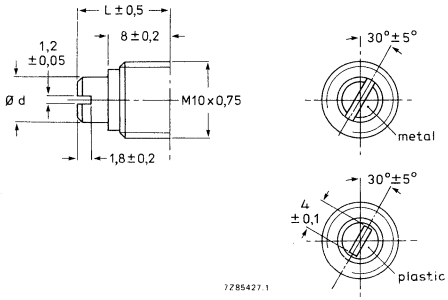	12		6h9	$6^{0}_{-0,1}$
Fig. 12d.				

Mounting holes for potentiometers with spindle

for single and tandem potentiometers	required mounting holes in chassis	fixing of potentiometer
with mounting bush M7 x 0,75 mm	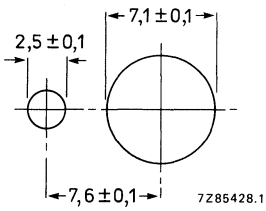 Fig. 13.	with supplied mounting nut; max. torque for tightening = 1 Nm; minimum thickness of mounting plate = 1 mm
with mounting bush M10 x 0,75 mm	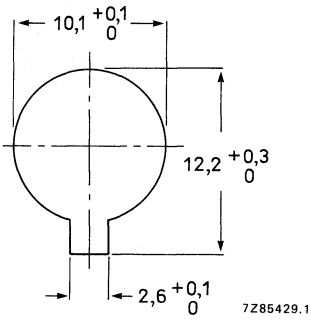 Fig. 14.	with supplied mounting nut; max. torque for tightening = 3,5 Nm; minimum thickness of mounting plate = 1 mm

BUILDING ELEMENTS FOR POTENTIOMETERS WITHOUT SPINDLE (Survey 1) AND WITH SPINDLE (Survey 2)

Battery switch (s.p.s.t.)

Operating torque, initial	25 to 75 mNm
Mechanical endurance	⩾ 16 000 cycles
D.C. voltage/current rating	14,4 V/3,5 A
Test voltage	
initial	500 V d.c. for 1 minute
after 21 days humidity test IEC 68-C	100 V d.c. for 1 minute
Contact resistance	
initial	⩽ 20 mΩ
after 16 000 cycles (under load)	⩽ 50 mΩ
Insulation resistance, between switch contacts, and between interconnected contacts and housing	
initial	⩾ 100 MΩ
after 21 days humidity test IEC 68-C	⩾ 2 MΩ

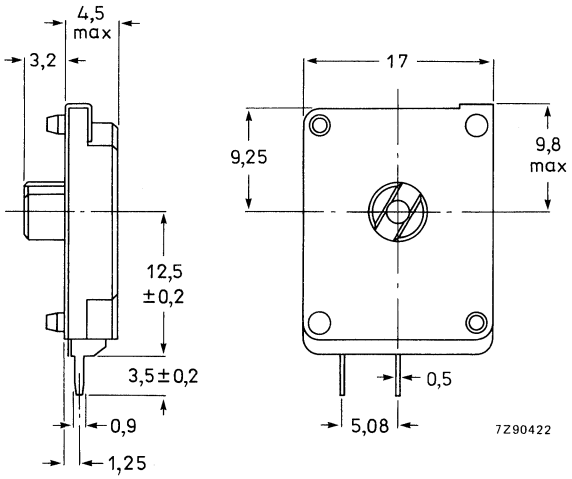

Fig. 15.

Metal shield

For the suppression of hum, crosstalk and noise. Provided with earth tag. Can be mounted at the rear of the potentiometers. Material: finished steel. Potentiometers with a switch do not need this shield (the switch already has one).

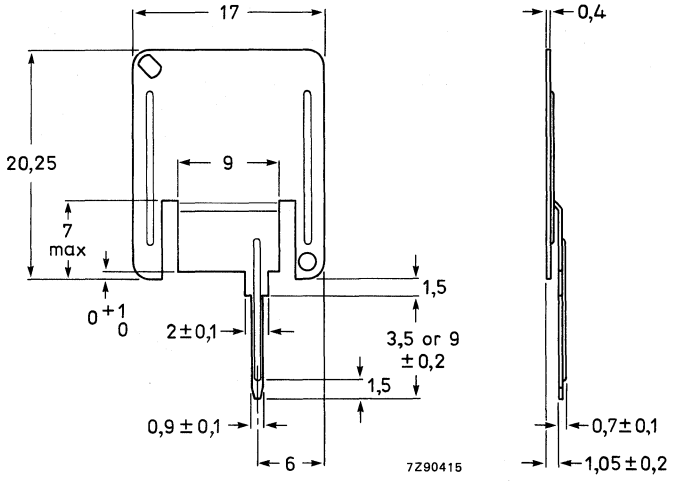

Fig. 16.

Plastic cover

Can be mounted at the rear of the potentiometer. Use is necessary if a test voltage of 1000 V a.c. must be withstood for 1 minute.

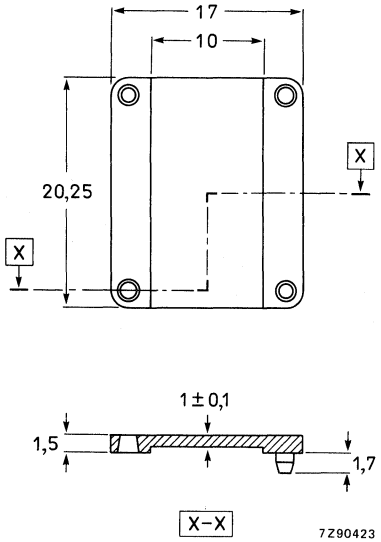

Fig. 17.

Terminals

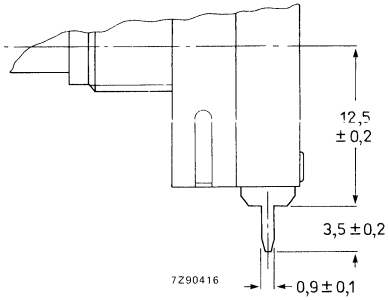

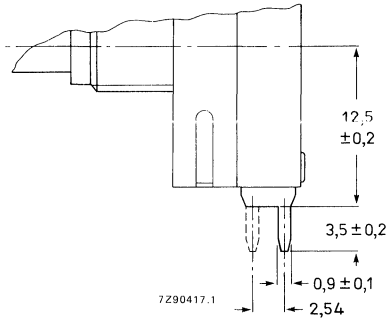

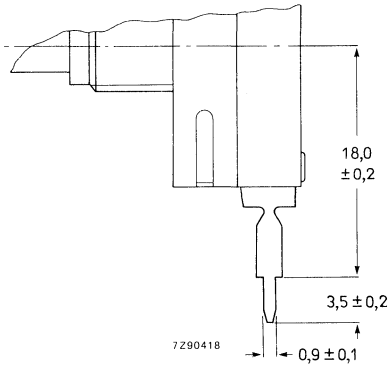

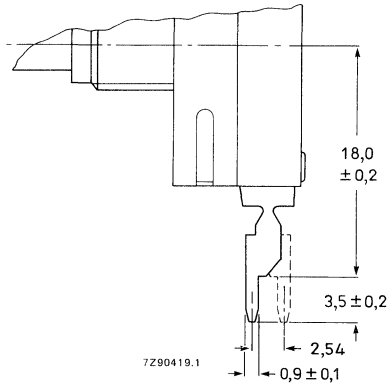

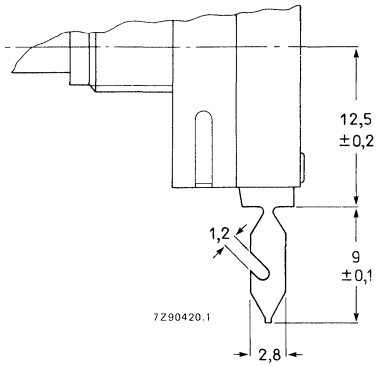

Fig. 18.

ELECTRICAL DATA

Unless otherwise specified, all values are valid at an ambient temperature of 18 to 22 °C, an atmospheric pressure of 86 to 106 kPa and a relative humidity of 45 to 75%.

For measuring and test methods, see IEC publications 393-1 and 68. The terms used are explained in general section Terms and Definitions.

	carbon		cermet
→ Resistance range, E3 series*			
potentiometers without spindle			
linear law	220 Ω to 2,2 MΩ		220 Ω to 2,2 MΩ
logarithmic law	2200 Ω to 2,2 MΩ		–
potentiometers with spindle			
linear law	220 Ω to 2,2 MΩ		220 Ω to 2,2 MΩ
logarithmic law	2200 Ω to 2,2 MΩ		–
Tolerance on resistance	± 20%*		± 10%
Resistance law and tolerances (see Fig. 19)	type A, B, C, H		type A
Ganging tolerance (tandem potentiometers)			
linear law	standard	special	
at values between 10 and 90% of R_{ac}	< 2 dB		
(reversed) logarithmic law			
at attenuations between 0 and 20 dB	< 2 dB		
at attenuations between 20 and 40 dB	< 3 dB		
at attenuations between 40 and 60 dB	< 4 dB		
with a tap at 10% of R_{total}, tap load 1% of R_{ac}			
at attenuations between 0 and 20 dB	< 2 dB	< 2 dB	
at attenuations between 20 and 40 dB	< 3 dB	< 3 dB	
at attenuations between 40 and 60 dB	< 4 dB	< 3 dB	
at attenuations between 60 and 70 dB	< 6 dB	< 3 dB	
at attenuations between 70 and 80 dB	< 8 dB	< 8 dB	
Terminal resistance, (residual)	⩽ 2% of R_{nom} or 10 Ω		⩽ 1% of R_{nom} or 10 Ω
Resistance at the tap	⩽ 1,5% or R_{nom} or 10 Ω		
Contact resistance moving, initially,			
linear law	⩽ 4% of R_{ac}		⩽ 2,5% of R_{ac}
logarithmic law	⩽ 8% of R_{ac}		–
Contact resistance variation (CRV), (acc. to IEC 393-1, sub. clause 4.17) initially,			
linear law	⩽ 1%		⩽ 1% of R_{ac}
logarithmic law	⩽ 2%		–
→ Temperature coefficient of resistance	± 500 x 10^{-6}/K		± 100 x 10^{-6}
Insulation resistance			
after damp heat test (IEC 68, test C)	after 21 days > 100 MΩ		after 56 days > 100 MΩ

* 10% on request.

	carbon	cermet
Maximum attenuation		
$R_{ac} \geqslant 22\ k\Omega$, logarithmic law	$\geqslant 90$ dB	
$R_{ac} < 22\ k\Omega$, logarithmic law	$\geqslant 75$ dB	
$R_{ac} < 22\ k\Omega$, linear law	$\geqslant 55$ dB	$\geqslant 60$ dB
Maximum dissipation at $T_{amb} = 40\ ^oC$ (P_{max})*		
linear law	0,2 W	1,25 W **
logarithmic law	0,1 W	
linear law, using a heatsink		3 W **
Limiting element voltage		
500 V d.c. or 350 V a.c. never to be exceeded	$\sqrt{P_{max} \times R_{nom}}$	$\sqrt{P_{max} \times R_{nom}}$
Limiting wiper current	$\sqrt{P_{max}/R_{nom}}$	$\sqrt{P_{max}/R_{nom}}$
Test voltage for 1 minute	500 V, 50 Hz	500 V, 50 Hz
with cover	1000 V, 50 Hz	1000 V, 50 Hz
Working temperature range		
versions without spindle	−25 to + 70 °C	−25 to + 70 °C
versions with spindle	−25 to + 70 °C	−40 to + 125 °C
Storage temperature range		
without switch, versions without spindle	−55 to + 100 °C	−55 to + 100 °C
without switch, versions with spindle		−55 to + 125 °C
with switch	−40 to + 85 °C	
Climatic category (IEC 68)		
versions without spindle	25/070/10	25/070/56
versions with metal spindle	25/070/10	40/125/56
versions with plastic spindle	25/070/10	26/070/56

ENVIRONMENTAL TESTS

tests	requirements		
		carbon	cermet
Climatic sequence	$\Delta R_{ac}/R_{ac}$	$\leqslant 10\%$	$\leqslant 2\%$
Damp heat, steady state			
$R \leqslant 100\ k\Omega$	$\Delta R_{ac}/R_{ac}$	$\leqslant 15\%$	$\leqslant 2\%$
$R > 100\ k\Omega$		$\leqslant 20\%$	$\leqslant 2\%$
Mechanical endurance			
25 000 cycles	$\Delta R_{ac}/R_{ac}$	$\leqslant 10\%$	$\leqslant 2\%$
Electrical endurance			
1000 h at 70 °C, cyclic	$\Delta R_{ac}/R_{ac}$	$\leqslant 10\%$	$\leqslant 2\%$
Resistance to soldering heat			
(IEC 68-2, test T)	$\Delta R_{ac}/R_{ac}$	$\leqslant 2\%$	$\leqslant 1\%$
Change of temperature	$\Delta R_{ac}/R_{ac}$	$\leqslant 3\%$	$\leqslant 1\%$
	$\Delta V_{ab}/V_{ac}$	$\leqslant 1\%$	$\leqslant 0{,}5\%$
Bump and vibration	$\Delta R_{ac}/R_{ac}$	$\leqslant 2\%$	$\leqslant 0{,}5\%$
	$\Delta V_{ab}/V_{ac}$	$\leqslant 1\%$	$\leqslant 0{,}5\%$

* For derating see Fig. 20.

** For versions with metal spindle. The max. dissipation of cermet types with plastic spindle is 1 W (lin. law) and 2 W (lin. law with heatsink).

Characteristics of potentiometers without switch

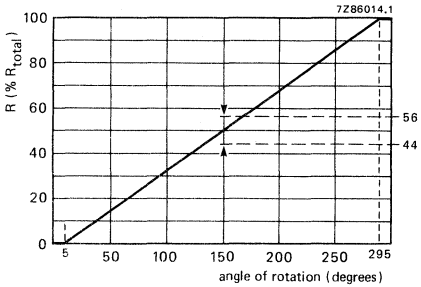

Type A
Fig. 19a Linear law.

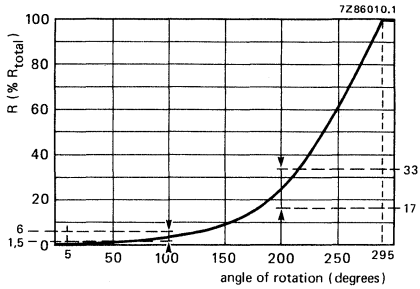

Type B
Fig. 19b Logarithmic law.

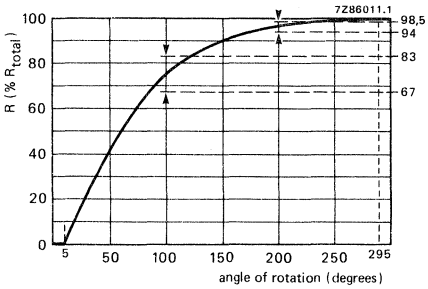

Type C
Fig. 19c Reversed logarithmic law.

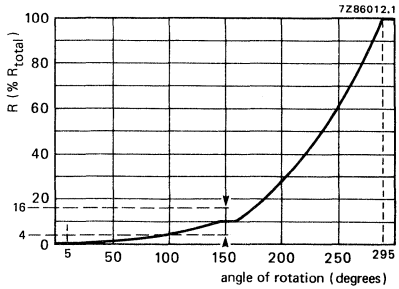

Type H
Fig. 19d Logarithmic law, tap at 10%.

Characteristics of potentiometers with switch

The curves of Fig. 19a to d have to be adapted since the effective angle of rotation is from 43° to 295°. An example for linear law is given in Fig. 19e.

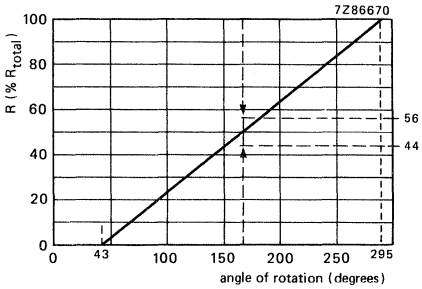

Type A
Fig. 19e Linear law.

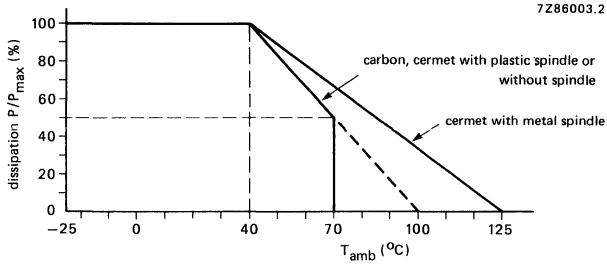

Fig. 20 Maximum permissible dissipation as a function of ambient temperature.

MARKING

The potentiometers are marked according to IEC 62 as follows:
- nominal resistance (in RKM code)
- resistance law
- code for year and month of manufacture.

MECHANICAL DATA

	versions without spindle		versions with spindle		
	single duo	tandem	single duo	tandem	unit
Max. axial force	80*	80*	100	100	N
Operating torque initial	4 to 16	4 to 20	5 to 20	5 to 30	mNm
Operating torque of switch	25 to 75	25 to 75	25 to 75	25 to 75	mNm
Max. permissible end-stop torque	600	600	4ϕ: 600 6ϕ: 800	4ϕ: 600 6ϕ: 800	mNm mNm
Angle of rotation	300 ± 2	300 ± 2	300 ± 2	300 ± 2	deg
Effective angle of rotation with switch	290 ± 2,5 252 ± 2,5	290 ± 2,5 252 ± 2,5	290 ± 2,5 252 ± 2,5	290 ± 2,5 252 ± 2,5	deg deg
Axial rotor/spindle play	⩽ 0,2	⩽ 0,2	⩽ 0,3	⩽ 0,3	mm
Radial rotor/spindle play	⩽ 0,2	⩽ 0,2	⩽ 0,1 per 10 mm	⩽ 0,1 per 10 mm	mm

Angle of rotation

1. Types without switch
   total mechanical angle 0° to 300°
   effective R-angle 5° to 295°
   For performance see Fig. 21a

2. Types with switch
   total mechanical angle 0° to 300°
   O to A; radial spindle play in "off" position (c.c.w.) 10° max.
   O to B; switch angle 43° max.
   B to C; effective R-angle 43° to 295°
   For performance see Fig. 21b

a

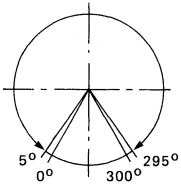

b

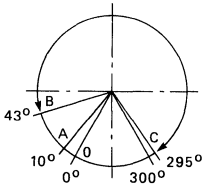

7Z86309.1

MOUNTING

The potentiometers with printed-wiring terminals are intended for p.c. board mounting with a grid pitch of 1e (2,54 mm). The holes in the board should be 1,3 ± 0,5 mm; the board thickness not over 2 mm. Potentiometers with bushing should be mounted as described in Figs 13 and 14.

* If not supported: 20 N.

23 mm CERMET POTENTIOMETERS

QUICK REFERENCE DATA

Resistance range (E3 series), linear law	47 Ω to 22 MΩ
Maximum dissipation at 40 °C	5 W
Climatic category, IEC 68	55/125/56

APPLICATION

These potentiometers are for control functions where high dissipation and high stability are necessary, e.g. in industrial control functions.

DESCRIPTION

These potentiometers have a metal-glaze resistive element on a ceramic base. The actuating device is an isolated rotor with a multiple wiper, operated by a metal spindle. For applications, up to 70 °C, potentiometers with a plastic spindle are also available. The resistance element is shielded by a metal housing. The bushing is profiled to act as a heatsink.

The terminals a and c (see Fig. 1) are the end terminals; b is the central terminal connected to the slider. All terminals are either solder tags (also suitable for snap-on connection), or printed wiring pins.

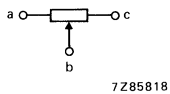

Fig. 1.

MOUNTING

The potentiometers can be mounted on a panel with a hexagonal nut which is supplied with each potentiometer (catalogue number of nut 4322 047 00350). The maximum tightening torque is 3,5 Nm.

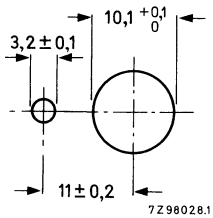

Fig. 2.

MARKING

The potentiometers are marked with:
- nominal resistance (in RKM code according to IEC 62)
- resistance law (LIN)
- code for period and year of manufacture.

Outline drawings.

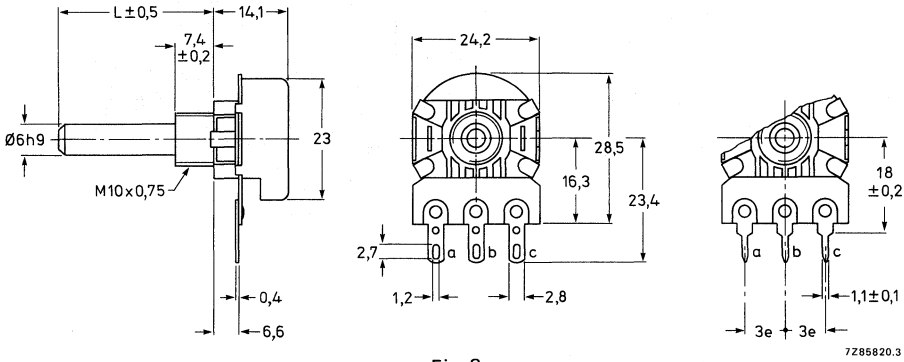

Fig. 3.

Dimension L: 18, 30 or 60

TECHNICAL DATA

Unless otherwise specified, all values have been determined at an ambient temperature of 15 to 35 °C, an atmospheric pressure of 96 to 106 kPa and a relative humidity of 45 to 75%. The 47 Ω and the 100 Ω versions deviate slightly from the specified data.

Resistance range (E3 series), linear law	47 Ω to 22 MΩ
Tolerance on nominal resistance	± 10%
Resistance law, see Fig. 4	
Maximum dissipation at 40 °C (P_{max})	5 W
Test voltage between interconnected terminals and chassis during 1 minute, a.c. or d.c.	1000 V
Rated element voltage	$\sqrt{P_{max} \cdot R_{nom}}$
Insulation resistance after damp heat test IEC 68, c 56 days	$\geqslant 10^5$ MΩ
Temperature coefficient	$\leqslant 100 \cdot 10^{-6}$ /K
CRM (contact resistance moving), initial after life test	$\leqslant$ 4% of R_{ac} $\leqslant$ 6% of R_{ac}
CRV (contact resistance variation), initial after life test	$\leqslant$ 2% of R_{ac} $\leqslant$ 2% of R_{ac}
Climatic category according to IEC 68-2	
metal spindle	55/125/56
plastic spindle	25/70/56
Operating torque (max./min. $\leqslant$ 2)	3 to 20 mNm
Permissible end-stop torque	$\leqslant$ 800 mNm
Permissible axial spindle load	$\leqslant$ 100 N
Effective angle of rotation	270° ± 2°
Mechanical angle of rotation	300° ± 5°
Rotation life	25 000 cycles

RESISTANCE

Potentiometers covered by this specification are linear, see Fig. 4.

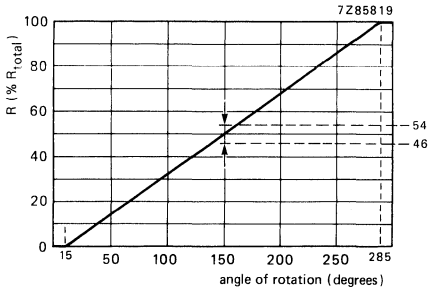

Fig. 4.

DERATING

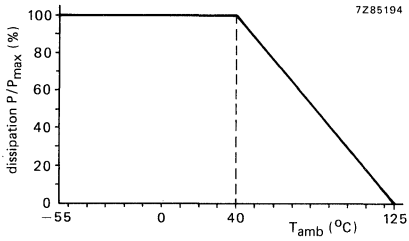

Fig. 5.

COMPOSITION OF THE CATALOGUE NUMBER

2322 481 . . . . .

code for terminals and spindle material

0 = solder tags, metal spindle
1 = p.w. tags, metal spindle
7 = solder tags, plastic spindle
6 = p.w. tags, plastic spindle

code for spindle length

06 = 18 mm length
03 = 30 mm length
07 = 60 mm length

code for nominal resistance

91 = 47 Ω	09 = 47 kΩ
01 = 100 Ω	11 = 100 kΩ
02 = 220 Ω	12 = 220 kΩ
03 = 470 Ω	13 = 470 kΩ
04 = 1 kΩ	14 = 1 MΩ
05 = 2,2 kΩ	15 = 2,2 MΩ
06 = 4,7 kΩ	16 = 47 MΩ
07 = 10 kΩ	17 = 10 MΩ
08 = 22 kΩ	18 = 22 MΩ

ENVIRONMENTAL TESTS

tests	requirements	
Climatic sequence	$\Delta R_{ac}/R_{ac}$	$\leqslant 2\%$
Damp heat, steady state	$\Delta R_{ac}/R_{ac}$	$\leqslant 2\%$
Mechanical endurance 25 000 cycles	$\Delta R_{ac}/R_{ac}$	$\leqslant 2\%$
CRV (contact resistance variation) initial after 25 000 cycles	 CRV CRV	 $\leqslant 1{,}5\%$ $\leqslant 1{,}5\%$
Electrical endurance 1000 h at 70 °C, cyclic	$\Delta R_{ac}/R_{ac}$	$\leqslant 2\%$
Resistance to soldering heat (IEC 68-2, test T)	$\Delta R_{ac}/R_{ac}$	$\leqslant 0{,}5\%$
Change of temperature	$\Delta R_{ac}/R_{ac}$ $\Delta V_{ab}/V_{ac}$	$\leqslant 1\%$ $\leqslant 0{,}5\%$
Bump and vibration	$\Delta R_{ac}/R_{ac}$	$\leqslant 0{,}5\%$

25 mm SLIDE CARBON POTENTIOMETERS

QUICK REFERENCE DATA

Nominal resistance, E3 series	
linear law	100 Ω – 4,7 MΩ
logarithmic law	1 kΩ – 2,2 MΩ
Maximum dissipation at 40 °C	
linear law	0,2 W
logarithmic law	0,1 W
Climatic category, IEC 68	25/070/21

APPLICATION

These potentiometers are particularly suitable for audio, television, monitors and semi-industrial applications.

DESCRIPTION

A straight carbon track is fitted on to a base plate of resin bonded paper, which is mounted in a housing of black synthetic resin.
The slider contact is adjusted by means of a knob, which moves along a silvered spindle. Two types of slider knob are available. The potentiometers are available with linear or logarithmic resistance law.
The elements are provided with an external screening shield which is either black coated (shield without printed-wiring tags) or tin plated (shield with printed-wiring tags).

The terminals a and c (see Fig. 1) are the end terminals; b is the central terminal connected to the slider. All terminals are suited for mounting on printed-wiring boards.

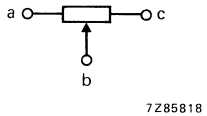

Fig. 1 Terminal allocations.

Outlines

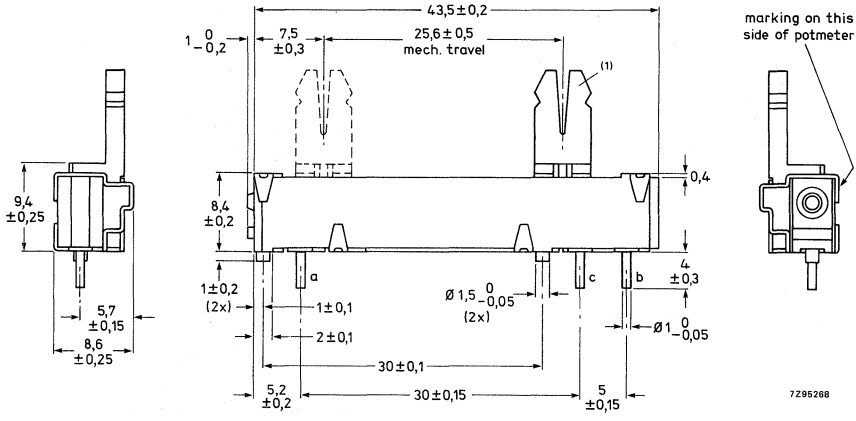

Fig. 2 Version with black coated shield without p.w. tags.

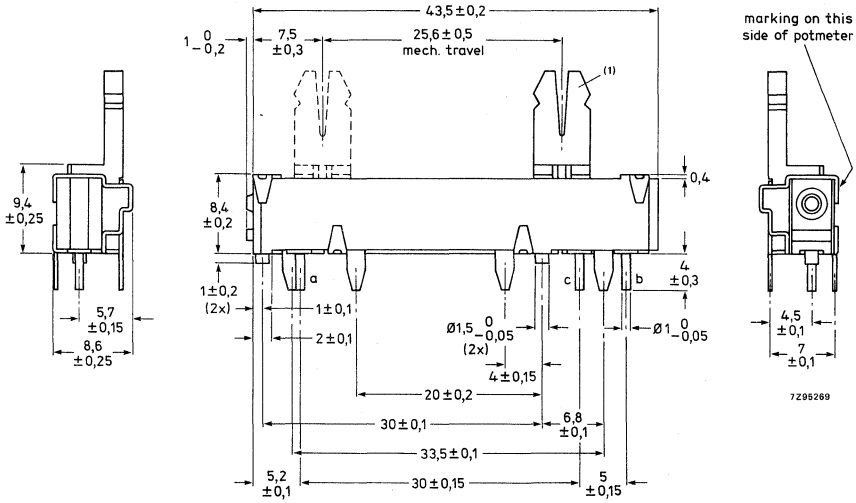

Fig. 3 Version with tin-plated shield with p.w. tags.

* For dimensions see types of slider knobs, Figs 5 and 6.

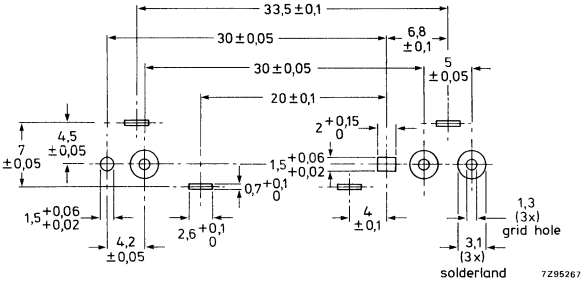

Fig. 4 Hole pattern in the printed-wiring board, viewed from the component side. The 4 oblong holes 2,6 x 0,7 are required for the accomodation of the p.w. tags of the tin plated shield, see Fig. 3.

Types of slider knobs

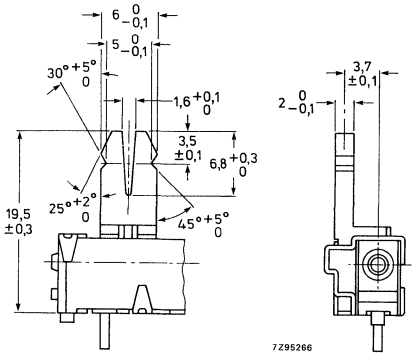

Fig. 5 Dimensions of long slider knob.

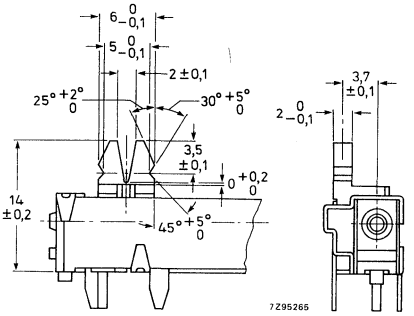

Fig. 6 Dimensions of short slider knob.

TECHNICAL DATA

Unless stated otherwise, all electrical values have been determined at an ambient temperature of 15 to 35 °C, an air pressure of 86 to 106 kPa and a relative humidity of 45 to 75%.

Table 1 Linear resistance law

nominal resistance R_{nom}	maximum terminal resistance measured between terminals b and a or b and c	maximum attenuation dB
100 Ω	10 Ω	20
220 Ω	20 Ω	20
470 Ω	35 Ω	30
1 Ω	50 Ω	30
2,2 kΩ	100 Ω	40
4,7 kΩ	200 Ω	40
10 kΩ	300 Ω	40
22 kΩ	600 Ω	50
47 kΩ	1 kΩ	50
100 kΩ	2 kΩ	50
220 kΩ	3,5 kΩ	60
470 kΩ	6 kΩ	60
1 MΩ	10 kΩ	70
2,2 MΩ	20 kΩ	70
4,7 kΩ	50 kΩ	70

Table 2 Logarithmic resistance law

nominal resistance R_{nom}	maximum terminal resistance measured between terminals b and a	b and c	maximum attenuation dB
1 kΩ	10 Ω	150 Ω	40
2,2 kΩ	20 Ω	250 Ω	50
4,7 kΩ	35 Ω	500 Ω	50
10 kΩ	50 Ω	1 kΩ	50
22 kΩ	100 Ω	1,5 kΩ	60
47 kΩ	200 Ω	2,5 kΩ	60
100 kΩ	250 Ω	5 kΩ	60
220 kΩ	500 Ω	7,5 kΩ	70
470 kΩ	1 kΩ	15 kΩ	70
1 MΩ	2 kΩ	30 kΩ	80
2,2 MΩ	5 kΩ	60 kΩ	80

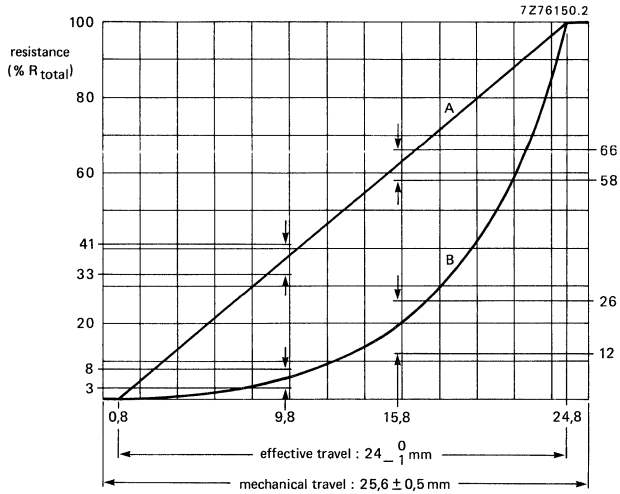

Fig. 7 Resistance as a function of slider displacement.
curve A = linear law;
curve B = logarithmic law.

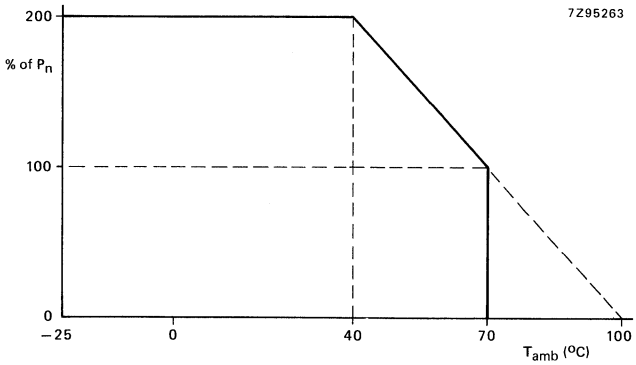

Fig. 8 Derating curve.

	linear law	logarithmic law
$T_{amb} = 40^o$	$P_{max} = 0{,}2$ W	$P_{max} = 0{,}1$ W
$T_{amb} = 70^o$	$P_{max} = 0{,}1$ W	$P_{max} = 0{,}05$ W

Resistance range, E3 series, see Fig. 7	
linear law	100 Ω to 4,7 MΩ
logarithmic law	1 kΩ to 2,2 MΩ
Tolerance on nominal resistance, see Fig. 7	± 20%
Terminal resistance	see Tables 1 and 2
Temperature coefficient, −25 °C to + 70 °C	−500 to + 500·10^{-6}/K
Maximum dissipation (P_{max}), see Fig. 8	
linear law, at 40 °C	0,2 W
linear law, at 70 °C	0,1 W
logarithmic law at 40 °C	0,1 W
logarithmic law at 70 °C	0,05 W
Climatic category, (IEC 68)	25/070/21
Storage temperature range	−55 °C to + 70 °C
Operating force (F)	0,75 to 2,5 N ($\frac{F_{max}}{F_{min}} \leqslant 2$)
Permissible force with slider at end stop*	⩽ 30 N
Permissible load perpendicual to the direction of movement*	⩽ 10 N
Permissible axial force on slider (push and pull)*	⩽ 20 N
Effective travel of slider contact	24 − 1 mm
Mechanical travel of slider contact	25,6 ± 0,5 mm
Life	5000 x in both directions

MOUNTING

The terminals may be dip-soldered to a depth of 2 mm max. in a solder bath of 260 °C max. for 4 s max.

When a soldering bit is used, its temperature must not exceed 360 °C for 1,5 s and neither axial nor radial stress must be exerted on the terminals.

MARKING

The potentiometers are marked with nominal resistance, resistance law, period and year of manufacture.

* Measured for 5 s, 5 mm above centre of potentiometer.

ENVIRONMENTAL TESTS

tests	requirements	
Climatic sequence	$\Delta R_{ac}/R_{ac}$	$\leqslant$ 15%
Damp heat, steady state	$\Delta R_{ac}/R_{ac}$	$\leqslant$ 15%
Mechanical endurance	$\Delta R_{ac}/R_{ac}$	$\leqslant$ 10%
Electrical endurance 1000 h at 70 °C, cyclic	$\Delta R_{ac}/R_{ac}$	$\leqslant$ 10%
Resistance to soldering heat (IEC 68-2, test T)	$\Delta R_{ac}/R_{ac}$	$\leqslant$ 3%
Change of temperature	$\Delta R_{ac}/R_{ac}$	$\leqslant$ 5%
Bump and vibration	$\Delta R_{ac}/R_{ac}$	$\leqslant$ 3%

COMPOSITION OF THE CATALOGUE NUMBER

2322 415 . . . . .

code for slider

6 = long (Fig. 5)

7 = short (Fig. 6)

code for shield

11 = black coated; without p.w. tags (Fig. 2)

22 = tin coated; with p.w. tags (Fig. 3)

code for nominal resistance

nominal resistance	linear law	logarithmic law
100 Ω	01	
220 Ω	02	
470 Ω	03	
1 kΩ	04	24
2,2 kΩ	05	25
4,7 kΩ	06	26
10 kΩ	07	27
22 kΩ	08	28
47 kΩ	09	29
100 kΩ	11	31
220 kΩ	12	32
470 kΩ	13	33
1 MΩ	14	34
2,2 MΩ	15	35

40 mm SLIDE CARBON POTENTIOMETERS

QUICK REFERENCE DATA

Nominal resistance	
linear law	220 Ω – 4,7 MΩ
logarithmic and reversed logarithmic law	1 kΩ–2,2 MΩ
Maximum dissipation at 40 °C	
linear law	0,25 W
logarithmic and reversed logarithmic law	0,125 W
Climatic category (IEC 68)	10/070/21

DESCRIPTION

This slide carbon potentiometer series includes two types:
– single potentiometers, for general purposes,
– tandem potentiometers, for stereophonic purposes.

The single potentiometers have a straight carbon track on a resin bonded paper base plate mounted in a black synthetic resin housing.

The tandem potentiometers have two carbon tracks opposite each other on resin bonded paper base plates.

The terminals are connected as shown below. The potentiometers can be supplied without taps or with a tap at 50% of the total travel.

Both types of potentiometer are available with or without metal screening on the outer surface of the housing to provide protection against interference. The tandem potentiometers can also be supplied with a metal screen between the two carbon tracks to prevent crosstalk.

The potentiometers are available with a variety of connecting terminals and adjustment provisions. Detent slide potentiometers (11 click, 31 click and centre click) can be supplied to special order.

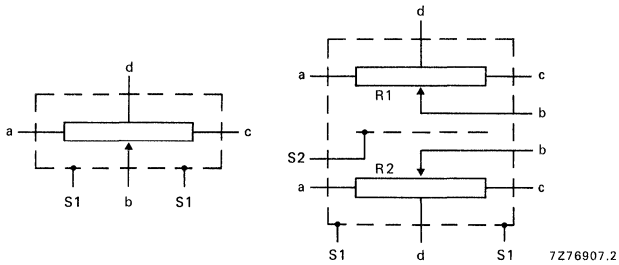

Single type Tandem type

Fig. 1 Terminal allocations.

MECHANICAL DATA

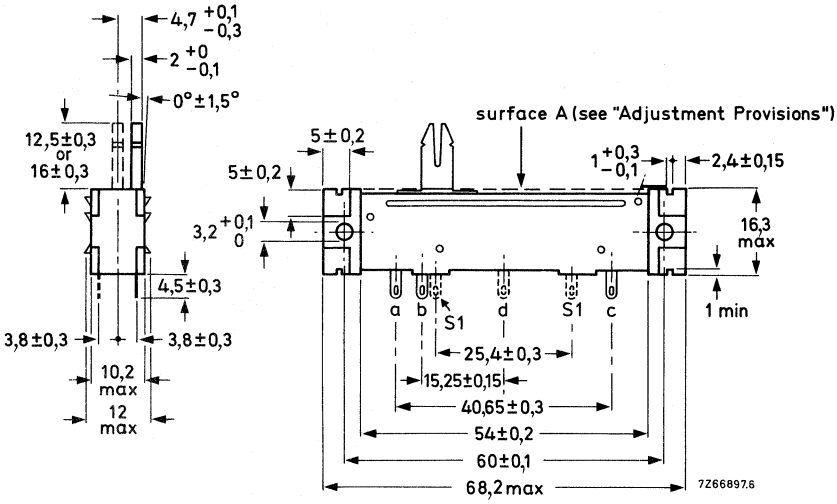

Fig. 2 Single slide potentiometer with solder tags.

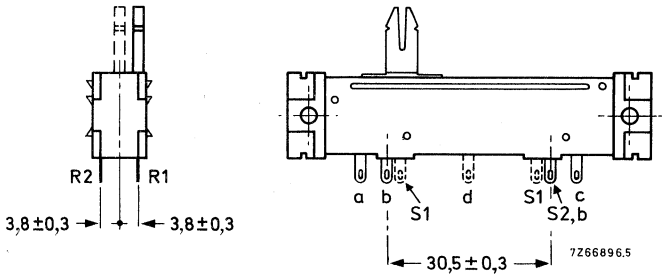

Fig. 3 Tandem slide potentiometer with solder tags.

Dimensions are identical with those in Fig. 2 except as shown.
The side on which potentiometer R1 is situated is indicated by a mark at the beginning of R1.

Mounting

Use two type 4N Parker self-tapping screws (according to UN-B1005 or UN-B1023, minimum thread length 8 mm) in the two holes spaced 80 mm apart.

Maximum tightening torque: 500 mNm. Minimum stripping torque: 700 mNm.

Connecting terminals

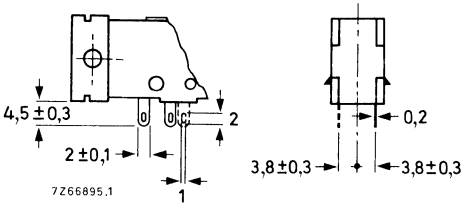

Fig. 4 Solder tags.

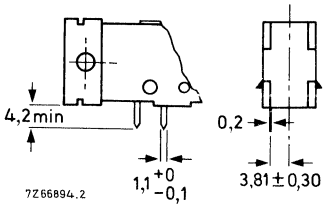

Fig. 5 Printed-wiring pins.

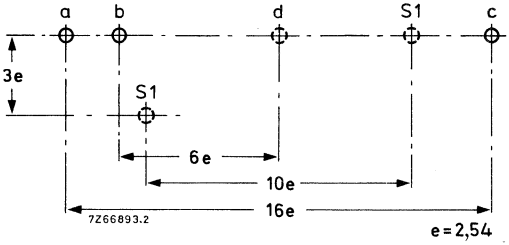

Fig. 6 Hole pattern in the printed-wiring board for a single potentiometer (viewed on component side).

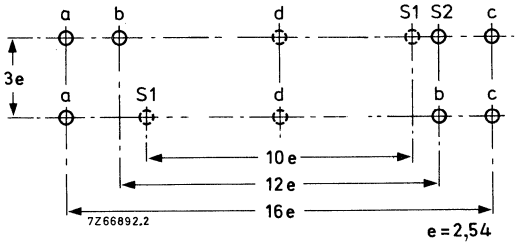

Fig. 7 Hole pattern in the printed-wiring board for a tandem potentiometer (viewed on component side).

Adjustment provisions

Four adjustment sliders are available:
– symmetrically placed, height 12,5 mm or 16 mm
– asymmetrically placed, height 12,5 mm or 16 mm

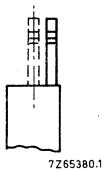

Fig. 8 End view of potentiometer with symmetrically (dotted lines) and asymmetrically placed adjustment slider.

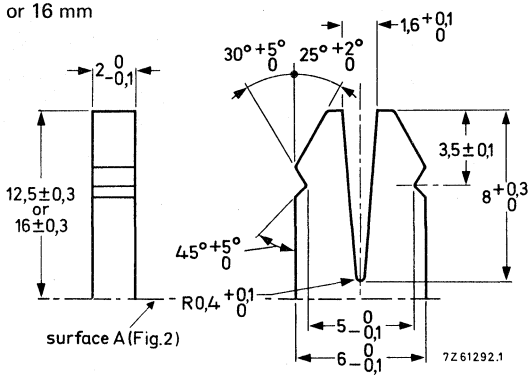

Fig. 9 Adjustment slider.

TECHNICAL DATA

Unless stated otherwise, all electrical values have been determined at an ambient temperature of 15 to 35 °C, an air pressure of 86 to 106 kPa and a relative humidity of 45 to 75%.

Linear resistance law according to Fig. 10; either without or with tap at 50%.

nom. resist. R_{nom}	max. voltage (V)		max. terminal resistance	max. attenuation dB	max. contact resistance $\%R_{nom}$	limiting slider current at 40 °C mA
	at 40 °C	at 70 °C				
220 Ω	7,4	5,2	10 Ω	–	3	33
470 Ω	11	7,7	10 Ω	–	3	23
1 kΩ	16	11	25 Ω	–	3	16
2,2 kΩ	23	16	25 Ω	–	3	10
4,7 kΩ	34	24	25 Ω	–	2,5	7,2
10 kΩ	50	35	35 Ω	–	2,5	5
22 kΩ	74	52	35 Ω	–	2,5	3,3
47 kΩ	108	77	35 Ω	–	2,5	2,3
100 kΩ	158	112	100 Ω	–	2,5	1,6
220 kΩ	234	166	125 Ω	–	2,5	1,0
470 kΩ	342	242	250 Ω	–	2,5	0,72
1 MΩ	500	354	1 kΩ	–	2,5	0,50
2,2 MΩ	500	500	2,2 kΩ	–	2,5	0,33
4,7 MΩ	500	500	4,7 kΩ	–	2,5	0,23

Logarithmic resistance law according to Figs 11 and 12; without or with tap at 50%.

nom. resist R_{nom}	max. voltage (V)		max. terminal resistance	max. attenuation dB	max. contact resistance $\%R_{nom}$	limiting slider current at 40 °C mA
	at 40 °C	at 70 °C				
1 kΩ	11	7,9	25 Ω	50	4	11
2,2 kΩ	16	12	25 Ω	60	4	7,3
4,7 kΩ	24	17	25 Ω	60	4	5,1
10 kΩ	35	25	35 Ω	60	4	3,5
22 kΩ	52	37	35 Ω	70	4	2,4
47 kΩ	77	54	35 Ω	70	4	1,6
100 kΩ	112	79	50 Ω	80	4	1,1
220 kΩ	166	117	50 Ω	80	4	0,73
470 kΩ	242	170	100 Ω	80	4	0,51
1 MΩ	354	250	500 Ω	80	4	0,35
2,2 MΩ	500	370	500 Ω	80	4	0,24

Rev. logarithmic resistance law according to Fig. 13, without tap

nom. resist R_{nom}	max. voltage (V)		max. terminal resistance	max. attenuation dB	max. contact resistance $\%R_{nom}$	limiting slider current at 40 °C mA
	at 40 °C	at 70 °C				
1 kΩ	11	7,9	100 Ω	50	4	11
2,2 kΩ	16	12	100 Ω	60	4	7,3
4,7 kΩ	24	17	100 Ω	60	4	5,1
10 kΩ	35	25	250 Ω	60	4	3,5
22 kΩ	52	37	250 Ω	70	4	2,4
47 kΩ	77	54	500 Ω	70	4	1,6
100 kΩ	112	79	2,5 kΩ	80	4	1,1
220 kΩ	166	117	2,5 kΩ	80	4	0,73
470 kΩ	242	170	5 kΩ	80	4	0,51
1 MΩ	354	250	25 kΩ	80	4	0,35
2,2 MΩ	500	370	25 kΩ	80	4	0,24

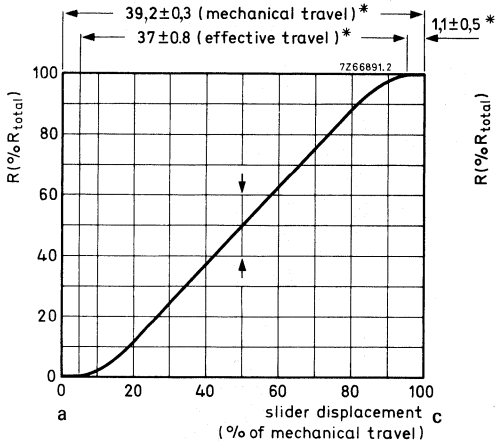

Fig. 10 Linear law; without tap.

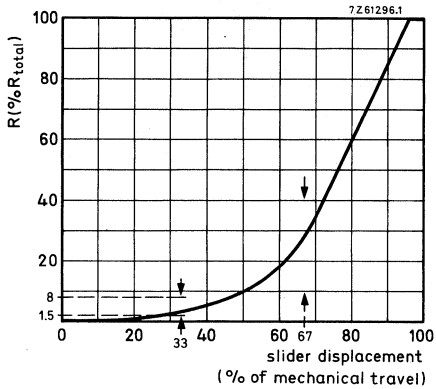

Fig. 11 Logarithmic law; without tap.

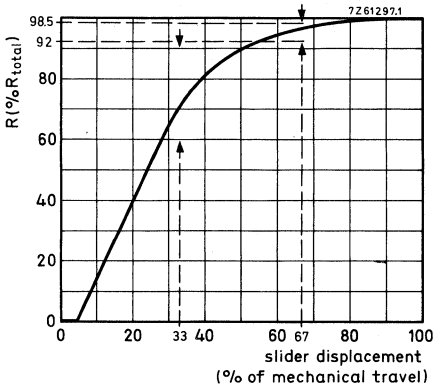

Fig. 12 Logarithmic law; tap at 50%.

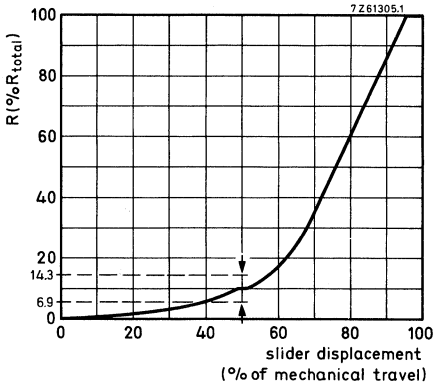

Fig. 13 Reversed logarithmic law, without tap.

* Valid for all graphs.

Resistance law	linear, logarithmic and reversed logarithmic, see Figs 10 to 13, (other laws on request)
Tolerance on nominal resistance	± 20%
Minimum resistance at the tap	⩽ 10 Ω
Insulation resistance (versions with external screening), initially	> 10^4 MΩ
Maximum dissipation (P_{max})	
linear law, at 40 °C	0,25 W
linear law, at 70 °C	0,125 W
logarithmic and reversed logarithmic law	
at 40 °C	0,125 W
at 70 °C	0,0625 W
Test voltage for 1 min (versions with external screening)	1000 V, 50 Hz
Working temperature range	−10 to +70 °C
Storage temperature range	−25 to +70 °C
Climatic category (IEC 68)	10/070/21
Operating force (F) *	
single potentiometers	0,75 – 2 N } $\frac{F_{max}}{F_{min}}$ ⩽ 1,3
tandem potentiometers	1,25 – 2,5 N }
Permissible force with slider at end stop *	⩽ 50 N (Fig. 14)
Permissible load perpendicular to the direction of movement *	⩽ 20 N (Fig. 15)
Permissible torque on slider *	⩽ 0,3 Nm (Fig. 16)
Permissible axial force on slider (push and pull) *	⩽ 50 N

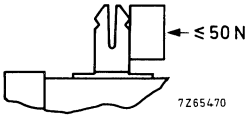

Fig. 14

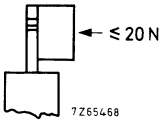

Fig. 15

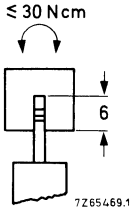

Fig. 16

Effective travel of slider contact	37 ± 0,8 mm } see also Fig. 10
Mechanical travel of slider contact	39,2 ± 0,3 }
Life	10 000 x in both directions

* Measured for 5 s on a free slider without knob.

Ganging tolerance*

Linear law, without tap, at values between 10 and 90% of R_{ac}	< 2 dB
Linear law, with tap, at values between 10 and 90% of R_{ac}	< 3 dB
Logarithmic and reversed logarithmic law without tap,	
at attenuations between − 0 and −20 dB	< 2 dB
at attenuations between −20 and −30 dB	< 3 dB
at attenuations between −30 and −40 dB	< 4 dB
Logarithmic and reversed logarithmic law with tap,	
at attenuations between 0 and −20 dB	< 2 dB
at attenuations between −20 and −30 dB	< 3 dB
at attenuations between −30 and −34 dB	< 4 dB

Crosstalk* (measured according to Fig. 17)

	potentiometers with internal screening		potentiometers without internal screening	
resistance value	at 1 kHz	at 10 kHz	at 1 kHz	at 10 kHz
220 Ω to 100 kΩ	⩾ 70 dB	⩾ 55 dB	⩾ 60 dB	⩾ 45 dB
100 kΩ to 220 kΩ	⩾ 60 dB	⩾ 50 dB	⩾ 50 dB	⩾ 40 dB
220 kΩ to 470 kΩ	⩾ 60 dB	⩾ 50 dB	⩾ 50 dB	⩾ 40 dB
470 kΩ to 2,2 MΩ	⩾ 50 dB	⩾ 40 dB	⩾ 40 dB	⩾ 30 dB

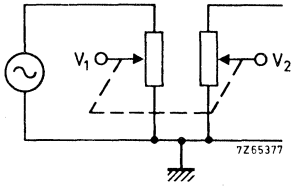

Fig. 17 Crosstalk = 20 log $\frac{V_1}{V_2}$.

MARKING

The potentiometers are marked at the side with nominal resistance, resistance law, period and year of manufacture.

* For tandem potentiometers only.

AVAILABLE VERSIONS AND COMPOSITION OF THE CATALOGUE NUMBER

2322 43 . . . . . .

code for type and screw-mounting facility

0 = single, without screw-mounting facility
1 = single, with screw-mounting facility

5 = tandem, without screw-mounting facility
6 = tandem, with screw-mounting facility

code for resistance law and nominal resistance, see table below

code for tap
0 = without tap

2 = tap at 50%

code for screening and terminals

screening:	solder tags	p.w. pins
without	0	5
internal *	1	6
internal and external *	2	7
external	3	8

code for adjustment provision

0 = asymmetrically placed
1 = symmetrically placed } length 12,5 mm

2 = asymmetrically placed
3 = symmetrically placed } length 16 mm

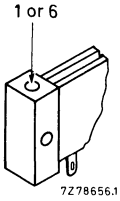

Fig. 18.

Note

Detent slide potentiometers (11 click-, 21 click- and centre - click types) can be supplied on request.

nominal resistance	code in catalogue number		
	linear law	log. law	reversed log. law
220 Ω	02		
470 Ω	03		
1 kΩ	04	24	44
2,2 kΩ	05	25	45
4,7 kΩ	06	26	46
10 kΩ	07	27	47
22 kΩ	08	28	48
47 kΩ	09	29	49
100 kΩ	11	31	51
220 kΩ	12	32	52
470 kΩ	13	33	53
1 MΩ	14	34	54
2,2 MΩ	15	35	55
4,7 MΩ	16		

* For tandem potentiometers only.

60 mm SLIDE CARBON POTENTIOMETERS

QUICK REFERENCE DATA

Nominal resistance	
linear law	220 Ω – 10 MΩ
logarithmic and reversed logarithmic law	1 kΩ – 4,7 MΩ
Maximum dissipation at 40 °C	
linear law	0,4 W
logarithmic and reversed logarithmic law	0,2 W
Category (IEC 68)	10/070/21

DESCRIPTION

This slide carbon potentiometer series includes two types:
– single potentiometers, for general purposes,
– tandem potentiometers, for stereophonic purposes.

The single potentiometers have a straight carbon track on a resin bonded paper base plate mounted in a black synthetic resin housing.

The tandem potentiometers have two carbon tracks opposite each other on resin bonded paper base plates.

The terminals are connected as shown below. The potentiometers can be supplied without taps or a tap at 50% of the total travel.

Both types of potentiometer are available with or without metal screening on the outer surface of the housing to provide protection against interference. The tandem potentiometers can also be supplied with a metal screen between the two carbon tracks to prevent crosstalk.

The potentiometers are available with a variety of connecting terminals and adjustment provisions. Detent slide potentiometers (11 click, 31 click and centre click) can be supplied to special order.

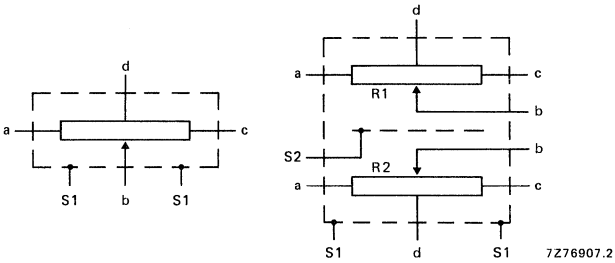

Single type

Tandem type 2

Fig. 1 Terminal allocations.

MECHANICAL DATA

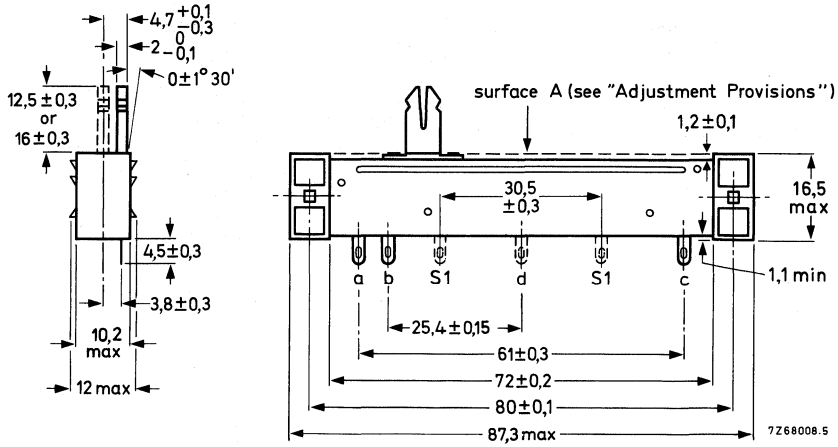

Fig. 2 Single slide potentiometer with solder tags.

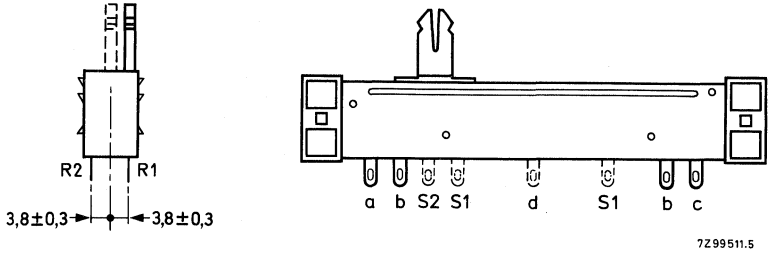

Fig. 3 Tandem slide potentiometer with solder tags.

Dimensions are identical with those in Fig. 2 except as shown.
The side on which potentiometer R1 is situated is indicated by a mark at the beginning of R1.

Mounting

Use two type 4N Parker self-tapping screws (according to UN-B1005 or UN-B1023, minimum thread length 8 mm) in the two holes spaced 80 mm apart.

Maximum tightening torque: 500 mNm. Minimum stripping torque: 700 mNm.

Connecting terminals

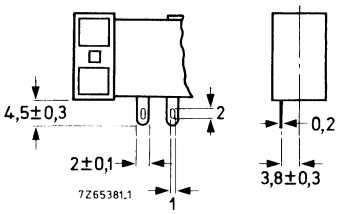

Fig. 4 Solder tags.

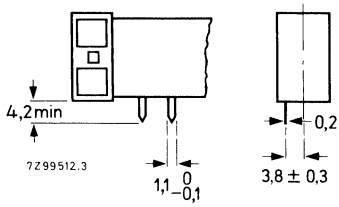

Fig. 5 Printed-wiring pins.

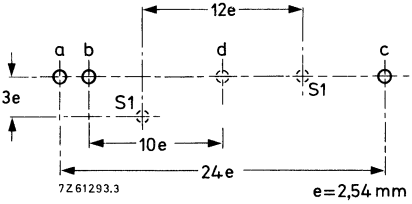

Fig. 6 Hole pattern in the printed-wiring board for a single potentiometer (viewed on component side).

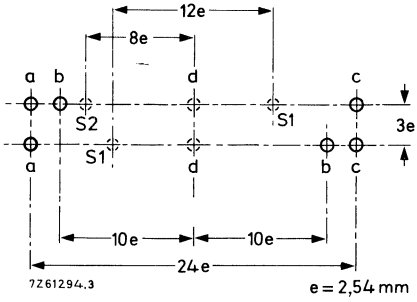

Fig. 7 Hole pattern in the printed-wiring board for a tandem potentiometer (viewed on component side).

Adjustment provisions

Four types of adjustment sliders are available:
- symmetrically positioned height 12,5 mm or 16 mm
- asymmetrically positioned height 12,5 mm or 16 mm

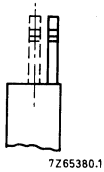

Fig. 8 End view of potentiometer with symmetrically (dotted lines) and asymmetrically positioned adjustment slider.

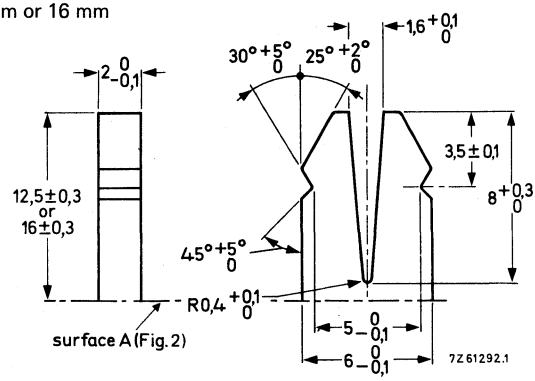

Fig. 9 Adjustment slider.

TECHNICAL DATA

Unless stated otherwise, all electrical values have been determined at an ambient temperature of 15 to 35 °C, an air pressure of 86 to 106 kPa and a relative humidity of 45 to 75%.

Linear resistance law according to Fig. 10; either without or with tap at 50%.

nom. resist. R_{nom}	max. voltage (V)		max. terminal resistance	max. attenuation dB	max. contact resistance $\%R_{nom}$	limiting slider current at 40 °C mA
	at 40 °C	at 70 °C				
220 Ω	9,3	7,4	10 Ω	–	3	40
470 Ω	14	11	10 Ω	–	3	22
1 kΩ	20	16	25 Ω	–	3	16
2,2 kΩ	30	23	25 Ω	–	3	11
4,7 kΩ	41	34	25 Ω	–	2	7
10 kΩ	63	50	35 Ω	–	2	5
22 kΩ	93	74	35 Ω	–	2	3,5
47 kΩ	137	108	35 Ω	–	2	2,2
100 kΩ	200	158	100 Ω	–	2	1,4
220 kΩ	296	234	125 Ω	–	2	1,0
470 kΩ	410	342	250 Ω	–	2	0,65
1 MΩ	500	500	1 kΩ	–	2	0,45
2,2 MΩ	500	500	2,2 kΩ	–	2	0,32
4,7 MΩ	500	500	4,7 kΩ	–	2	0,22
10 MΩ	500	500	10 kΩ	–	2	0,16

Logarithmic resistance law according to Figs 11 and 12; without or with tap at 50%.

nom. resist. R_{nom}	max. voltage (V)		max. terminal resistance	max. attenuation dB dB	max. contact resistance $\%R_{nom}$	limiting slider current at 40 °C mA
	at 40 °C	at 70 °C				
1 kΩ	14	11	25 Ω	50	4	10
2,2 kΩ	21	16	25 Ω	60	4	7
4,7 kΩ	31	24	25 Ω	60	4	4,5
10 kΩ	45	35	35 Ω	60	4	3,2
22 kΩ	66	52	35 Ω	70	4	2,2
47 kΩ	97	77	35 Ω	70	4	1,4
100 kΩ	141	112	50 Ω	80	4	1,0
220 kΩ	210	166	50 Ω	80	4	0,7
470 kΩ	310	242	100 Ω	80	4	0,45
1 MΩ	447	354	500 Ω	80	4	0,32
2,2 MΩ	500	500	500 Ω	80	4	0,22
4,7 MΩ	500	500	1 kΩ	80	4	0,14

Rev. logarithmic resistance law according to Fig. 13, without tap.

nom. resist R_{nom}	max. voltage (V)		max. terminal resistance	max. attenuation dB	max. contact resistance $\%R_{nom}$	limiting slider current at 40 °C mA
	at 40 °C	at 70 °C				
1 kΩ	14	11	100 Ω	50	4	10
2,2 kΩ	21	16	100 Ω	60	4	7
4,7 kΩ	31	24	100 Ω	60	4	4,5
10 kΩ	45	35	250 Ω	60	4	3,2
22 kΩ	66	52	250 Ω	70	4	2,2
47 kΩ	97	77	500 Ω	70	4	1,4
100 kΩ	141	112	2,5 kΩ	80	4	1,0
220 kΩ	210	166	2,5 kΩ	80	4	0,7
470 kΩ	310	242	5 kΩ	80	4	0,45
1 MΩ	447	354	25 kΩ	80	4	0,32
2,2 MΩ	500	500	25 kΩ	80	4	0,22
4,7 MΩ	500	500	50 kΩ	80	4	0,14

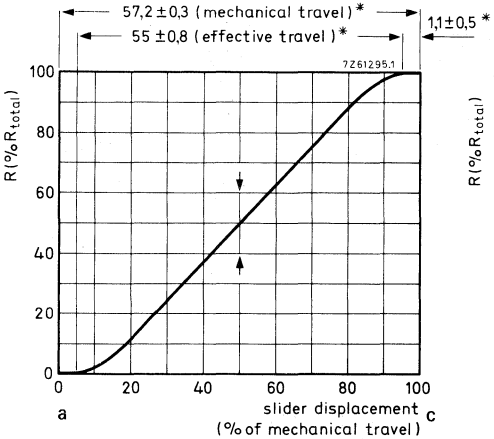

Fig. 10 Linear law; without tap.

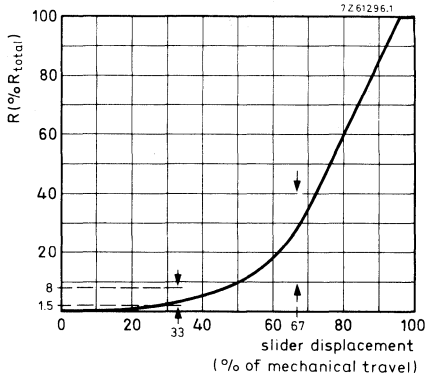

Fig. 11 Logarithmic law, without tap.

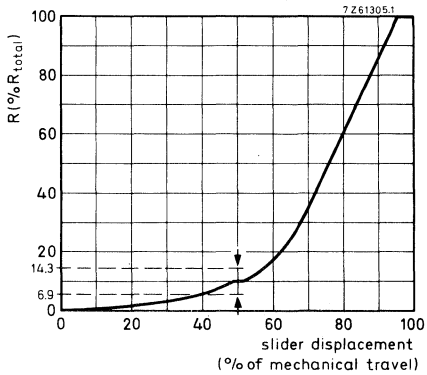

Fig. 12 Logarithmic law; tap at 50 %.

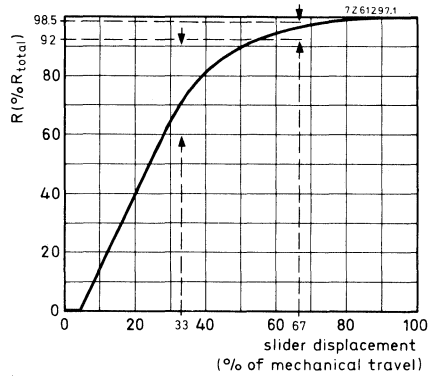

Fig. 13 Reversed logarithmic law; without tap.

* Valid for all graphs.

Resistance law	linear, logarithmic and reversed logarithmic, see Figs 10 to 13, (other laws on request)
Tolerance on nominal resistance	± 20%
Minimum resistance between the slider and the tap(s) when aligned	⩽ 10 Ω
Insulation resistance (versions with external screening), initially	> 10^4 MΩ
Maximum dissipation (P_{max})	
linear law, at 40 °C	0,4 W
at 70 °C	0,25 W
logarithmic and reversed logarithmic law	
at 40 °C	0,2 W
at 70 °C	0,125 W
Test voltage for 1 min	1000 V, 50 Hz
Working temperature range	−10 to + 70 °C
Storage temperature range	−25 to + 70 °C
Category (IEC68)	10/070/21
Operating force (F)	
single potentiometers	0,75 – 2 N, $\frac{F_{max}}{F_{min}} \leqslant 1,5$
tandem potentiometers	1,25 – 2,5 N
Permissible force with slider at end stop *	⩽ 50 N (Fig. 14)
Permissible load perpendicular to the direction of movement *	⩽ 20 N (Fig. 15)
Permissible torque on slider *	⩽ 0,3 Nm (Fig. 16)
Permissible axial force on slider (push and pull) *	⩽ 50 N

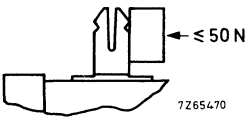

Fig. 14.

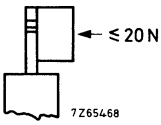

Fig. 15.

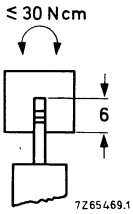

Fig. 16

Effective travel of slider contact	55 ± 0,8 mm, see also Fig. 10
Mechanical travel of slider contact	57,2 ± 0,3 mm
Life	10 000 x in both directions

* Measured for 5 s on a free slider without knob.

Ganging tolerance *

Linear law, without tap, at values between 10 and 90% of R_{ac}	< 2 dB
Linear law, with tap, at values between 10 and 90% of R_{ac}	< 3 dB
Logarithmic and reversed logarithmic law, without tap,	
at attenuations between – 0 and –20 dB	< 2 dB
at attenuations between –20 and –30 dB	< 3 dB
at attenuations between –30 and –40 dB	< 4 dB
Logarithmic law, with tap,	
at attenuations between – 0 and –20 dB	< 2 dB
at attenuations between –20 and –30 dB	< 3 dB
at attenuations between –30 and –34 dB	< 4 dB

Crosstalk * (measured according to Fig. 17)

resistance value	potentiometers with internal screening		potentiometers without internal screening	
	at 1 kHz	at 10 kHz	at 1 kHz	at 10 kHz
220 Ω to 100 kΩ	⩽ –70 dB	⩽ –55 dB	⩽ –60 dB	⩽ –45 dB
100 kΩ to 220 kΩ	⩽ –60 dB	⩽ –50 dB	⩽ –50 dB	⩽ –40 dB
220 kΩ to 470 kΩ	⩽ –60 dB	⩽ –50 dB	⩽ –50 dB	⩽ –40 dB
470 kΩ to 2,2 MΩ	⩽ –50 dB	⩽ –40 dB	⩽ –40 dB	⩽ –30 dB

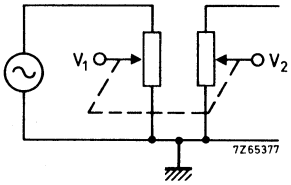

Fig. 17 Crosstalk = $20 \log \frac{V_2}{V_1}$.

MARKING

The side of the potentiometers is marked with nominal resistance, resistance law, period and year of manufacture.

* For tandem potentiometers only.

AVAILABLE VERSIONS AND COMPISITION OF THE CATALOGUE NUMBER

2322 42 . . . . . .

code for type

4 = single potentiometer
9 = tandem potentiometer

code for resistance law and nominal resistance, see table below

code for taps
0 = without taps
2 = tap at 50%

code for screening and terminals

screening:	solder tags	p.w. pins
without	0	5
internal *	1	6
internal and external *	2	7
external	3	8

code for adjustment provision

0 = asymmetrically } length 12,5 mm
1 = symmetrically }

2 = asymmetrically } length 16 mm
3 = symmetrically }

Note

Detent slide potentiometers (11 click, 31 click and centre click types) can be supplied to special order.

nominal resistance	code in catalogue number		
	linear law	log. law	reversed log. law
220 Ω	02		
470 Ω	03		
1 kΩ	04	24	44
2,2 kΩ	05	25	45
4,7 kΩ	06	26	46
10 kΩ	07	27	47
22 kΩ	08	28	48
47 kΩ	09	29	49
100 kΩ	11	31	51
220 kΩ	12	32	52
470 kΩ	13	33	53
1 MΩ	14	34	54
2,2 MΩ	15	35	55
4,7 MΩ	16	36	56
10 MΩ	17		

* For tandem potentiometers only.

WIREWOUND POTENTIOMETERS

QUICK REFERENCE DATA

Resistance range (E6-series), linear law	2,2 to 10 000 Ω
Maximum permissible dissipation at 40 °C	1,5 W
Climatic category (IEC 68)	25/085/21
Plastic housing, plastic spindle	

APPLICATION

In industrial electric and electronic equipment where accurate and gradual resistance regulation and high stability are required.

DESCRIPTION

The potentiometer consists of a single layer of resistance wire wound on an insulated former and housed in a moulded plastic case, which at one end has a plastic cover plate and at the other end a press-fitted threaded metal bushing supporting the plastic spindle.

Terminals a and c (see Fig. 1) are the end terminals which are of a snap-on type; b is the central terminal which is connected to the slider through a collector ring.

The case has a locating slot for mounting purposes.

The potentiometer is dust-proof sealed.

Outlines

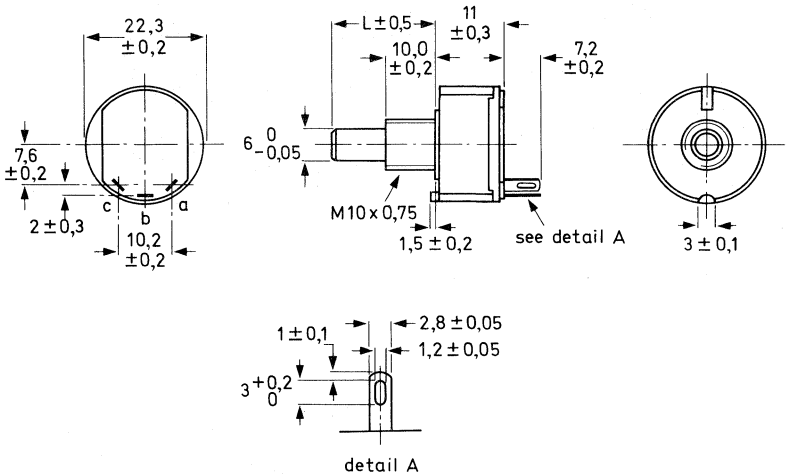

Fig. 1a Potentiometer with plain spindle; spindle length L is 17 mm, 20 mm, 30 mm or 60 mm.

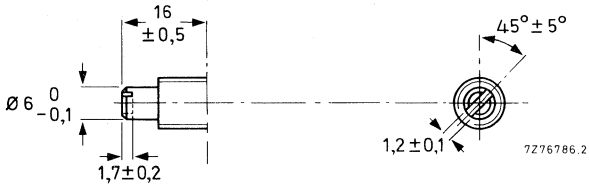

Fig. 1b Spindle with screwdriver slot; spindle fully counter-clockwise.

MOUNTING

The potentiometer can be mounted on a panel with an hexagonal nut which is supplied with the potentiometer (catalogue number of nut 4322 047 00350). The maximum torque for tightening the nut is 3,5 Nm. See Fig. 2 for the required mounting holes in the panel. A washer has to be used if the panel thickness is less than 1 mm as otherwise it might not be possible to secure the nut.

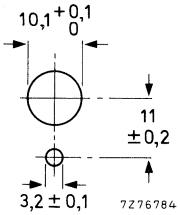

Fig. 2 Mounting holes.

TECHNICAL DATA

Unless stated otherwise, all electrical values have been determined at an ambient temperature of 15 to 25 °C, an air pressure of 93 to 106 kPa and a relative humidity of 45 to 75%.
For definitions of properties and test methods, see IEC 393–1.

Nominal resistance (R_n) between a and c	2,2 to 10 000 Ω, see Table 1
Resistance law	linear
Tolerance on R_n	±10%
Resistance at beginning and end	⩽ 2% of R_{total} or 300 mΩ whichever is greater
R gradient	0% of R_{total}
Resistance at 50% of effective angle of rotation	50 ± 2% of R_{total}
Contact resistance between resistance element and slider	⩽ 1% of R_{total} or 200 mΩ whichever is greater
Temperature coefficient	see Table 1
Maximum dissipation between a and c (Fig. 3)	
at T_{amb} = 40 °C	1,5 W
at T_{amb} = 70 °C	1,0 W
Resolution	
R_n = 2,2 to 68 Ω	< 1,5% of R_{total}
R_n > 68 Ω	< 0,8% of R_{total}
Maximum slider current	1 A
Maximum working voltage (a.c.) between case and resistance element	500 V
Test voltage (a.c.) between bearing bushing and resistance element	⩽ 2000 V
Insulation resistance	> 1000 MΩ
Ambient temperature range	−25 to +85 °C
Storage temperature range	−25 to +85 °C
Mechanical angle of rotation	270 ± 5°
Effective angle of rotation	265 ± 5°
Operating torque	3,5 to 20 mNm
Maximum end stop torque	800 mNm
Maximum axial force (push and pull)	100 N

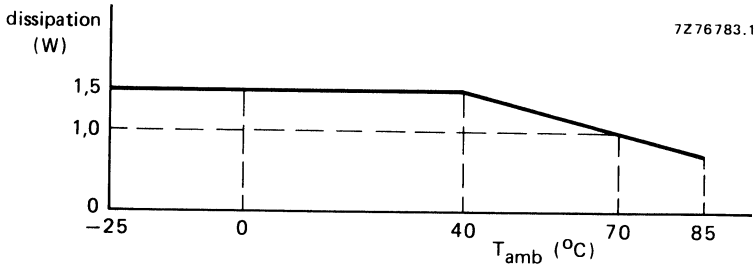

Fig.3 Dissipation as a function of ambient temperature.

Table 1

nominal resistance Ω	temperature coefficient 10^{-6}/K	number of turns ±25%	code in catalogue number
2,2		110	228
3,3		108	338
4,7		95	478
6,8		136	688
10	−25 to +600	126	109
15		194	159
22		113	229
33		134	339
47		120	479
68		172	689
100	−25 to +25	160	101
150		178	151
220		165	221
330		155	331
470		222	471
680		200	681
1 000		297	102
1 500	0 to +140	287	152
2 200		420	222
3 300		398	332
4 700		408	472
6 800	−20 to + 20	366	682
10 000		538	103

MARKING

The potentiometers are marked at the rear with nominal resistance value (according to IEC 62), resistance tolerance, power rating, production code (period and year) and name of manufacturer.

COMPOSITION OF THE CATALOGUE NUMBER

2322 018 . 1 . . .

figure indicating the spindle type
0 = slotted spindle
2 = plain spindle, L = 17 mm
3 = plain spindle, L = 20 mm
4 = plain spindle, L = 30 mm
5 = plain spindle, L = 60 mm
see Fig.1a

code for resistance value, see Table 1

figure indicating the tolerance of ±10%

TESTS AND REQUIREMENTS

IEC 393–1 test method	name of test	procedure (quick reference)	requirements
Ta	Solderability	235 ± 2 °C, 2 s.	95% of surface.
Tb (method 1B)	Resistance to soldering heat	350 °C, 3,5 s.	No damage; $\Delta R_{tot}/R_{tot} \leqslant 2\%$.
Na	Rapid change of temperature	5 cycles of ½ h at −25 °C and ½ h at +85 °C.	$\Delta R_{tot}/R_{tot} \leqslant 3\%$.
Fc	Vibration	10 to 55 Hz, 10g, 3 directions, 2 h per direction.	$\Delta R_{tot}/R_{tot} \leqslant 2\%$. 2%. No interruptions > 100 μs.
Ba, D, Aa	Climatic sequence	16 h at 85 °C. 24 h at 55 °C, R.H. 95 to 100%. 2 h at −25 °C. 24 h at 55 °C, R.H. 95 to 100%. 1 h reconditioning at 25 °C	No damage; $R_{min} \leqslant 2\%\ R_{tot}$; $\Delta R_{tot}/R_{tot} \leqslant 5\%$. Insulation resistance > 100MΩ. Test voltage for 1 min is 2000 V (a.c.). Continuity of resistance (after 4 cycles): $\Delta V/V < {}^{+7\%}_{-5\%}$.
Ca	Damp heat	21 days at 40 °C, R.H. 90 to 95%.	
	Endurance	1000 h at 70 °C, 1,5 W loaded, 1,5 h in and 0,5 h out.	$\Delta R_{tot}/R_{tot} \leqslant 5\%$. Continuity of resistance (after 4 cycles): $\Delta V/V < {}^{+7\%}_{-5\%}$.
	Mechanical endurance	15 000 cycles ($R_n \leqslant 4{,}7$ kΩ) or 10 000 cycles ($R_n > 4{,}7$ kΩ), 90% of effective angle of rotation; unloaded.	$\Delta R_{tot}/R_{tot} \leqslant 5\%$. Continuity of resistance (after 4 cycles): $\Delta V/V < {}^{+7\%}_{-5\%}$.
	Inflammability		Self-extinguishing within 15 s after removal from the flame.

WIREWOUND POTENTIOMETERS

QUICK REFERENCE DATA

Resistance range (E6-series), linear law	2,2 to 10 000 Ω
Maximum permissible dissipation at 40 °C	2 W
Climatic category (IEC 68)	25/085/21
Metal housing, metal spindle	

APPLICATION

In professional electric and electronic equipment where accurate and gradual resistance regulation and high stability are required.

DESCRIPTION

The potentiometer consists of a single layer of resistance wire wound on an insulated former and is housed in a metal case which at one end has a plastic cover plate and at the other end a moulded zinc plate with integral threaded bushing and locating pip. The threaded bushing supports the spindle.

Terminals a and c (see Fig. 1) are the end terminals which are of a snap-on type; b is the central terminal which is connected to the slider through a collector ring and is insulated from the spindle.

The potentiometer is dust-proof sealed.

Outlines

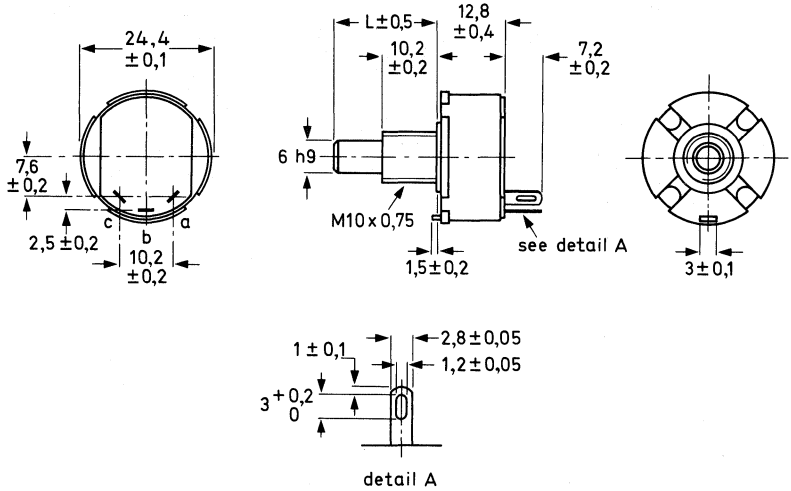

Fig. 1a Potentiometer with plain spindle; spindle length L is 17 mm, 20 mm, 30 mm or 60 mm.

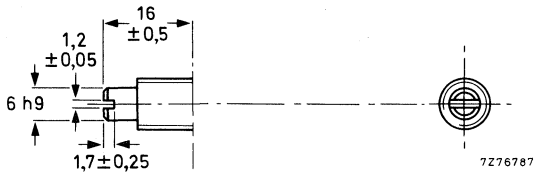

Fig. 1b Spindle with screwdriver slot; position of slot is at random.

MOUNTING

The potentiometer can be mounted on a panel with an hexagonal nut supplied with the potentiometer (catalogue number of nut 4322 047 00350). The maximum torque for tightening the nut is 3,5 Nm. See Fig. 2 for the required mounting holes in the panel.

A washer has to be used if the panel thickness is less than 1 mm as otherwise it might not be possible to secure the nut.

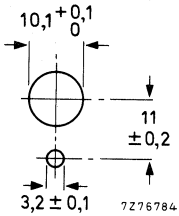

Fig. 2 Mounting holes.

TECHNICAL DATA

Unless stated otherwise, all electrical values have been determined at an ambient temperature of 15 to 25 °C, an air pressure of 93 to 106 kPa and a relative humidity of 45 to 75%.
For definitions of properties and test methods, see IEC 393–1.

Nominal resistance (R_n) between a and c	2,2 to 10 000 Ω, see Table 1
Resistance law	linear
Tolerance on R_n	±5%
Resistance at beginning and end	⩽ 2% of R_{total} or 300 mΩ whichever is greater
R gradient	0% of R_{total}
Resistance at 50% of effective angle of rotation	50 ± 2% of R_{total}
Contact resistance between resistance element and slider	⩽ 1% of R_{total} or 200 mΩ whichever is greater
Temperature coefficient	see Table 1
Maximum dissipation between a and c (Fig. 3)	
at T_{amb} = 40 °C	1,5 W
at T_{amb} = 70 °C	1,0 W
Resolution	
R_n = 2,2 to 68 Ω	< 1,5% of R_{total}
R_n > 68 Ω	< 0,8% of R_{total}
Maximum slider current	1 A
Maximum working voltage (a.c.) between case and resistance element	500 V
Test voltage (a.c.) between case and resistance element	⩽ 1500 V
Insulation resistance	> 1000 MΩ
Ambient temperature range	−25 to +85 °C
Storage temperature range	−25 to +85 °C
Mechanical angle of rotation	270 ± 5°
Effective angle of rotation	265 ± 5°
Operating torque	7,5 to 20 mNm
Maximum end stop torque	800 mNm
Maximum axial force (push and pull)	100 N

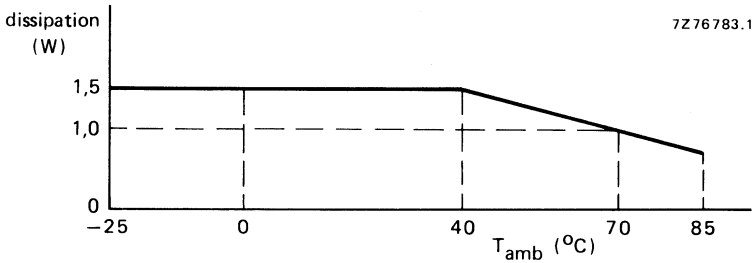

Fig. 3 Dissipation as a function of ambient temperature.

Table 1

nominal resistance Ω	temperature coefficient 10^{-6}/K	number of turns ±25%	code in catalogue number
2,2		110	228
3,3		108	338
4,7		95	478
6,8		136	688
10	−25 to +600	126	109
15		194	159
22		113	229
33		134	339
47		120	479
68		172	689
100	−25 to +25	160	101
150		178	151
220		165	221
330		155	331
470		222	471
680		200	681
1 000		297	102
1 500	0 to +140	287	152
2 200		420	222
3 300		398	332
4 700		408	472
6 800	−20 to + 20	366	682
10 000		538	103

MARKING

The potentiometers are marked at the rear with nominal resistance value (according to IEC 62), resistance tolerance, power rating, production code (period and year) and name of manufacturer.

COMPOSITION OF THE CATALOGUE NUMBER

2322 020 . 2 . . .

figure indicating the spindle type
0 = slotted spindle
2 = plain spindle, L = 17 mm
3 = plain spindle, L = 20 mm
4 = plain spindle, L = 30 mm
5 = plain spindle, L = 60 mm
see Fig.1a

figure indicating the tolerance of ±5%

code for resistance value, see Table 1

TESTS AND REQUIREMENTS

IEC 393–1 test method	name of test	procedure (quick reference)	requirements
Ta	Solderability	235 ± 2 °C, 2 s.	95% of surface
Tb (method 1B)	Resistance to soldering heat	350 °C, 3,5 s.	No damage; $\Delta R_{tot}/R_{tot} \leqslant 2\%$.
Na	Rapid change of temperature	5 cycles of ½ h at −25 °C and ½ h at +85 °C.	$\Delta R_{tot}/R_{tot} \leqslant 3\%$.
Fc	Vibration	10 to 55 Hz, 10g, 3 directions, 2 h per direction.	$\Delta R_{tot}/\Delta R_{tot} \leqslant 2\%$. No interruptions > 100 μs.
Ba, D, Aa	Climatic sequence	16 h at 85 °C. 24 h at 55 °C, R.H. 95 to 100%. 2 h at −25 °C. 24 h at 55 °C, R.H. 95 to 100%. 1 h reconditioning at 25 °C.	No damage; $R_{min} \leqslant 2\%\ R_{tot}$; $\Delta R_{tot}/R_{tot} \leqslant 5\%$. Insulation resistance > 100 MΩ. Test voltage for 1 min is 1500 V (a.c.). Continuity of resistance (after 4 cycles): $\Delta V/V < {}^{+7\%}_{-5\%}$.
Ca	Damp heat	21 days at 40 °C, R.H. 90 to 95%.	
	Endurance	1000 h at 70 °C, 1,5 W loaded, 1,5 h in and 0,5 h out.	$\Delta R_{tot}/R_{tot} \leqslant 5\%$. Continuity of resistance (after 4 cycles): $\Delta V/V < {}^{+7\%}_{-5\%}$.
	Mechanical endurance	15 000 cycles ($R_n \leqslant 4{,}7$ kΩ) or 10 000 cycles ($R_n > 4{,}7$ kΩ), 90% of effective angle of rotation; unloaded.	$\Delta R_{tot}/R_{tot} \leqslant 5\%$. Continuity of resistance (after 4 cycles): $\Delta V/V < {}^{+7\%}_{-5\%}$.
	Inflammability		Self-extinguishing within 15 s after removal from the flame.

PRESET POTENTIOMETERS

10 mm CARBON PRESET POTENTIOMETERS

QUICK REFERENCE DATA

Resistance range (E3-series), linear law	47 Ω – 4,7 MΩ
Maximum dissipation at 40 °C	0,1 W
Climatic category, IEC 68	25/070/21

APPLICATION

These potentiometers are for preset resistance control with provision for re-adjustment. They are particularly suitable for use in radio and television receivers.

DESCRIPTION

These potentiometers have a resistance element of a special carbon composition with a low temperature coefficient. The element is riveted to a base plate of resin bonded paper.
The potentiometers are provided with printing-wiring pins; pins a and c (see drawings) are connected to the ends of the carbon track, pin b is connected to the wiper. The wiper, which is provided with a double contact, has a screwdriver slot or a plastic knob for adjustment.
This potentiometer series includes types for vertical and for horizontal mounting on printed-wiring boards. Snap-in pins and cross slot are available on request.

Note: The potentiometers are supplied with the wiper positioned at 50% of the angle of rotation.

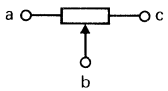

7Z85818

COMPOSITION OF THE CATALOGUE NUMBER

2322 410 . . . . .

0 = without knob
4 = with knob (Fig. 2; only for 2322 410 .50..)
6 = with knob (Figs 4 and 6; only for 2322 410 .11.. and 2322 410 .33..)

code for resistance value, see Table 1

11 = vertical mounting (Fig. 3)
33 = horizontal mounting (Fig. 5)
50 = vertical mounting (Fig. 1)

Note: catalogue number of knob (Fig. 2): 4322 047 00190 (only for 2322 410 .50..);
catalogue number of knob (Figs 4 and 6): 4322 047 27740 (only for 2322 410 .11.. and 2322 410 .33..).

MARKING

The potentiometers are marked with the nominal resistance value punched on the wiper.

OUTLINES

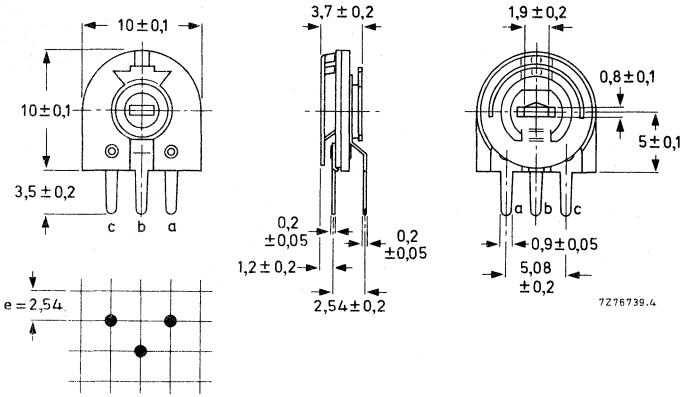

Fig.1 Potentiometer for vertical mounting 2322 410 050 . .

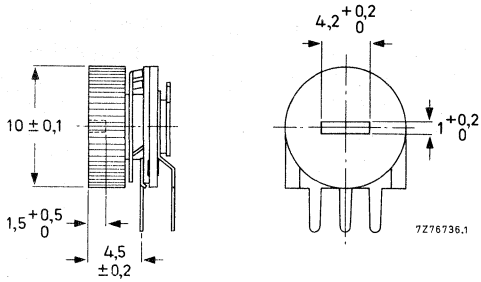

Fig.2 Potentiometer for vertical mounting with knob 2322 410 450 . .

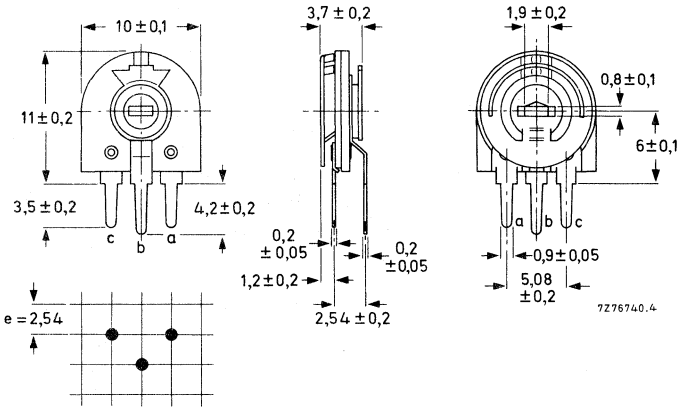

Fig.3 Potentiometer for vertical mounting 2322 410 011 . .

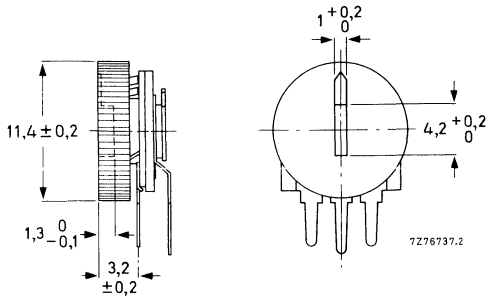

Fig. 4 Potentiometer for vertical mounting with knob 2322 410 611 . .

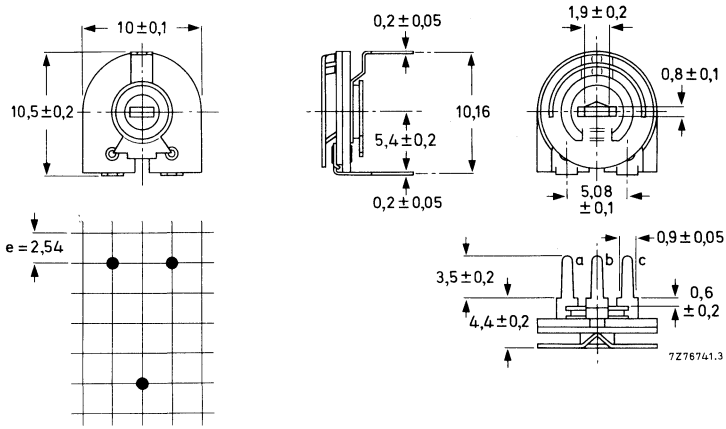

Fig. 5 Potentiometer for horizontal mounting 2322 410 033 . .

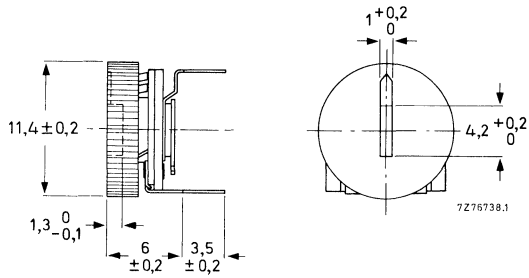

Fig. 6 Potentiometer for horizontal mounting with knob 2322 410 633 . .

TECHNICAL DATA

Unless otherwise specified all electrical values apply at an ambient temperature of 15 to 35 °C, an atmospheric pressure of 86 to 106 kPa and a relative humidity of 45 to 75%.

Table 1

nom. resistance R_{nom}	max. voltage (V) at 40 °C	max. terminal resistance Ω	limiting wiper current (mA) at 40 °C	code in catalogue number
47 Ω	2,2	10	46	91
100 Ω	3,2	10	32	51
220 Ω	4,7	10	21	52
330 Ω	5,7	10	17	69
470 Ω	6,9	10	15	53
1 kΩ	10	20	10	54
2,2 kΩ	14,8	40	6,7	55
4,7 kΩ	21,7	100	4,6	56
10 kΩ	32	200	3,2	57
22 kΩ	47	400	2,1	58
47 kΩ	69	1 000	1,5	59
100 kΩ	100	2 000	1,0	61
220 kΩ	148	4 000	0,7	62
470 kΩ	150	10 000	0,32	63
1 MΩ	150	20 000	0,15	64
2,2 MΩ	150	40 000	0,068	65
4,7 MΩ	150	100 000	0,032	66

Tolerance on the nominal resistance	± 20%
Resistance law	linear
Maximum dissipation (P_{max}),	
at 40 °C	0,1 W
at 70 °C	0,05 W
Maximum voltage	$\sqrt{P_{max} R_{nom}}$; maximum 150 V (see table above)
Ambient temperature range	−25 to + 70 °C
Climatic category, IEC 68	25/070/21
Temperature coefficient	−500 to + 300 . 10^{-6}/K
Operating torque	3,5 to 25 mNm
Maximum end stop torque	50 mNm
Effective angle of rotation	200 ± 10°
Mechanical angle of rotation	260 ± 5°
Mechanical endurance (200 cycles)	$\frac{\Delta R_{ac}}{R_{ac}} \leqslant 5\%$
Mass	
potentiometer without knob	0,40 g
potentiometer with knob	0,60 g

TESTS AND REQUIREMENTS

Clause numbers of tests and conditions of test refer to IEC 393-1 (potentiometers; part 1: terms and methods of test).

The potentiometers have been tested whilst mounted by their terminations on a printed wiring board. When drying is called for, procedure 1 of IEC 393-1, sub. 5.2 is used (24 ± 4 h, sub. 55 ± 2 °C, R.H. ≤ 20%). When the contact resistance variation (CRV) is measured, the wiper is rotated in both directions over 90% of the effective resistance.

IEC 393-1 clause	IEC 68-2 test method	test	procedure	typical result
6.22.3	Ta	Solderability	solder bath: 230° ± 5 °C, 2 ± 0,5 s	good tinning
6.22.4	Tb	Resistance to heat	solder bath: 350 ± 10 °C 3,5 ± 0,5 s	$\frac{\Delta R_{ac}}{R_{ac}} \leq 0{,}5\%$
6.25	Eb	Bump	acceleration 40g number of bumps: 4000	$\frac{\Delta R_{ac}}{R_{ac}} \leq 12\%$
6.24	Ec	Vibration	frequency: 10 to 500 Hz amplitude: 0,75 mm or 10g, 3 directions, 2 h per direction	$\frac{\Delta R_{ac}}{R_{ac}} \leq 2\%$ $\frac{\Delta V_{ab}}{V_{ab}} \leq 0{,}3\%$
6.13	–	Temperature characteristics of resistance	temp. cycle: +20 °C; –25 °C; +20 °C; +70 °C; +20 °C	$-500 < TC < +300 \cdot 10^{-6}/K$
6.26	–	Climatic sequence		
6.26.2	Ba	Dry heat	16 h at 70 ± 2 °C	$\frac{\Delta R_{ac}}{R_{ac}} \leq 5\%$
6.26.3	Db	Damp heat acc. 1st cycle	24 h at 55 ± 2 °C 95 – 100% R.H.	
6.26.4	Aa	Cold	2 h at –55 ± 3 °C	operating torque ≤ 30 mNm
6.26.6	Db	Damp heat, remaining cycle	24 h at 55 ± 2 °C 95 – 100% R.H.	
6.30	–	Electrical endurance	T_{amb}: 70 °C, 1000 h, cycle (1,5 h on and 0,5 h off, b at 0,67 a – c) Load: 0,05 W between a and c	CRV < 2% of R_{ac} $\frac{\Delta R_{ac}}{R_{ac}} \leq 10\%$ $\frac{\Delta V_{ab}}{V_{ac}} \leq 0{,}5\%$
			Load: 0,033 W between a and b	$\frac{\Delta R_{ab}}{R_{ab}} \leq 10\%$

IEC 393-1 clause	IEC 68-2 test method	test	procedure	typical result
6.29	–	Mechanical endurance	200 cycles, 4 cycles/min, no load	$\frac{\Delta R_{ac}}{R_{ac}} \leqslant 3\%$ CRV $< 0{,}5\%$ of R_{ac}
6.27	C	Damp heat steady state	slider at 0,67 a - c load via a - c recovery 24 h 22 ± 1 °C, 50% R.H. ± 5%	CRV $< 0{,}5\%$ of R_{ac} $\frac{\Delta R_{ac}}{R_{ac}} \leqslant 5\%$ $\frac{\Delta R_{ab}}{R_{ab}} \leqslant 5\%$ $\frac{\Delta V_{ab}}{V_{ac}} \leqslant 0{,}2\%$

14 mm CARBON PRESET POTENTIOMETERS

QUICK REFERENCE DATA

Resistance range (E3-series), linear law	47 Ω – 4,7 MΩ
Maximum dissipation at 40 °C	0,3 W
Climatic category, IEC 68	55/100/10
Dimensions based upon spec.	DIN 44150

APPLICATION

These potentiometers are for preset resistance control with provision for re-adjustments. They are particularly suitable for use in radio and television receivers.

DESCRIPTION

These preset potentiometers comprise a carbon track, which is riveted on to a base plate of resin-bonded paper. They are provided with snap-in printed-wiring pins, which hold them firmly in place on the board before soldering. They are also available with straight printed-wiring pins.

The pins a and c (see drawings) are connected to the ends of the carbon track; pin b is connected to the wiper. The wiper has a central screwdriver slot, a plastic knob or a wheel for adjustment.
This potentiometer series includes two types: one for vertical and one for horizontal mounting on printed-wiring boards.

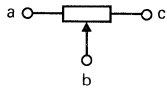

7Z85818

COMPOSITION OF THE CATALOGUE NUMBER

2322 409 . . . .

0 = without knob
1 = with knob at the side of the base plate
2 = with knob at the side of the carbon track
4 = with adjustment wheel at the side of the carbon track

02 = straight pins, vertical mounting
13 = straight pins, horizontal mounting
22 = snap-in pins, vertical mounting
33 = snap-in pins horizontal mounting

code for resistance value
91 = 47 Ω
51 = 100 Ω
52 = 220 Ω
69 = 330 Ω
53 = 470 Ω
54 = 1 kΩ
55 = 2,2 kΩ
56 = 4,7 Ω
57 = 10 kΩ
58 = 22 kΩ
59 = 47 kΩ
61 = 100 kΩ
62 = 220 kΩ
63 = 470 kΩ
64 = 1 MΩ
65 = 2,2 MΩ
66 = 4,7 MΩ

MARKING

The potentiometers are marked with the rated resistance value, by letter punches on the wiper or knob.

Outlines

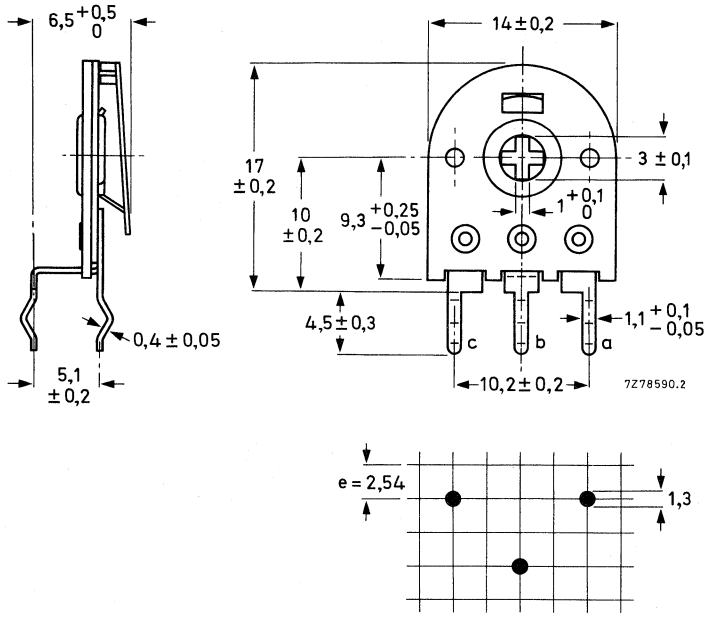

Fig.1a Potentiometer for vertical mounting, with snap-in printed-wiring pins, 2322 409 022.

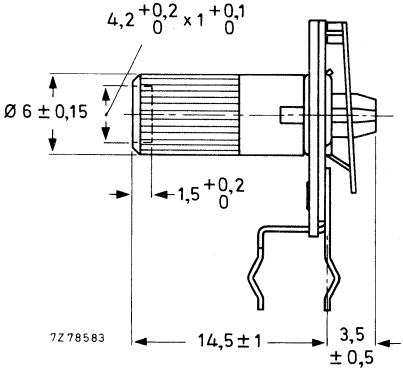

Fig. 1b Potentiometer with knob on the base plate side, 2322 409 122. .

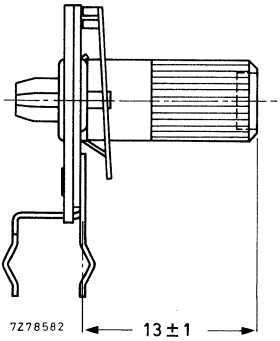

Fig. 1c Potentiometer with knob on the carbon track side, 2322 409 222. .

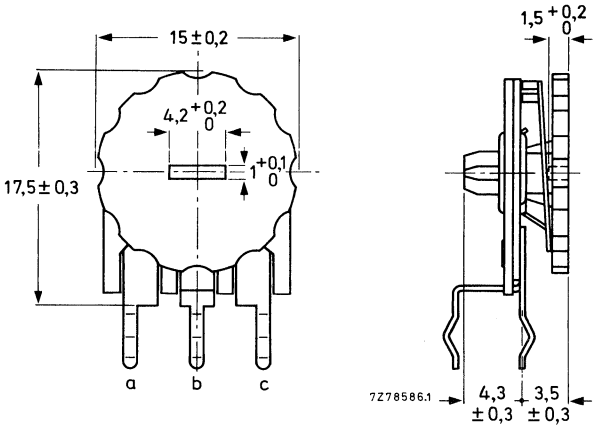

Fig.1d Potentiometer with adjustment wheel on the carbon track side, 2322 409 422. .

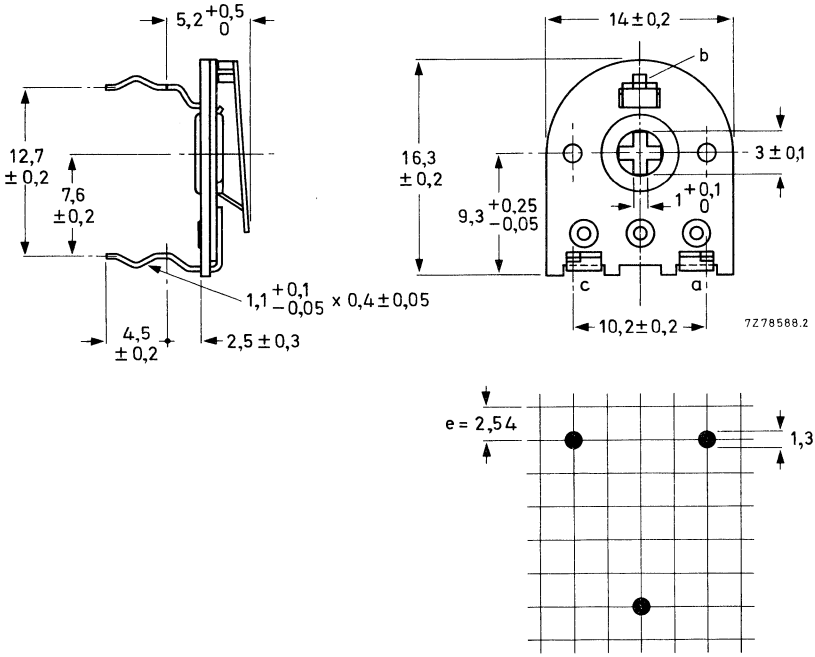

Fig.2a Potentiometer for horizontal mounting, with snap-in printed-wiring pins, 2322 409 033..

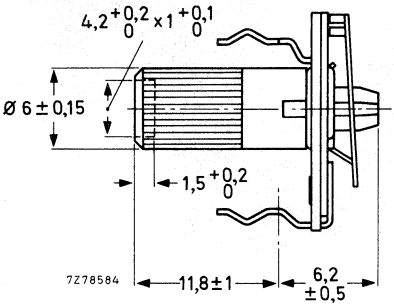

Fig. 2b Potentiometer with knob on the base plate side, 2322 409 133. .

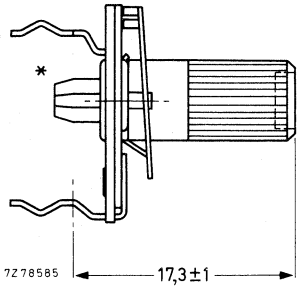

Fig. 2c Potentiometer with knob on the carbon track side, 2322 409 233. .

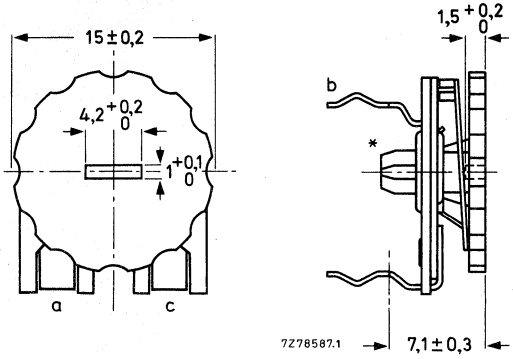

Fig. 2d Potentiometer with adjustment wheel on the carbon track side, 2322 409 433. .

* Required hole in printed-wiring board: ϕ4 + 0,2 mm.

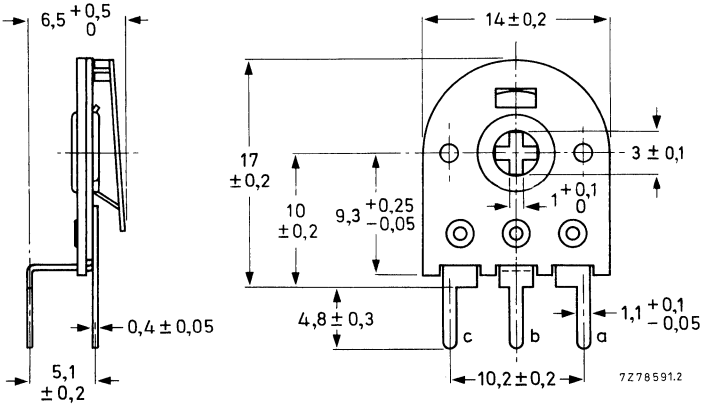

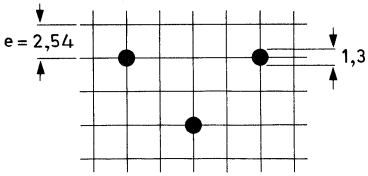

Fig.3 Potentiometer for vertical mounting, with straight printed-wiring pins, 2322 409 002..

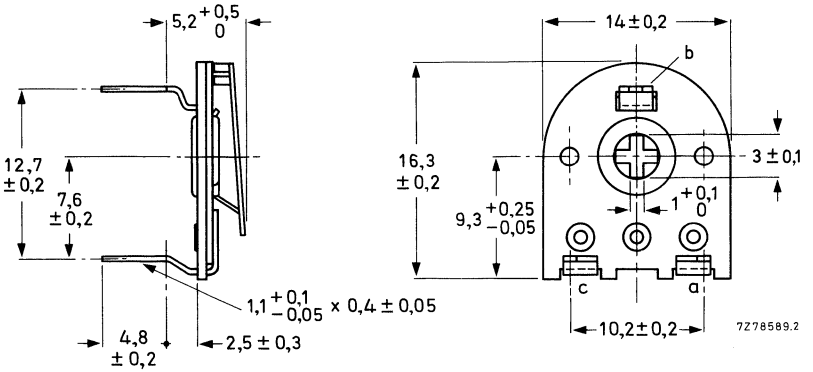

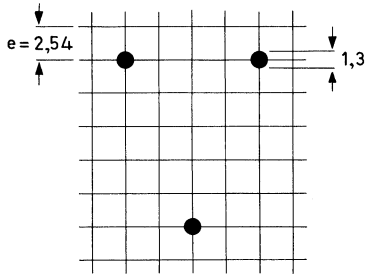

Fig.4 Potentiometer for horizontal mounting, with straight printed-wiring pins, 2322 409 013..

Note

For dimensions of knob or wheel versions see relevant drawing of snap-in-pin counterpart.

TECHNICAL DATA

Mass, per 100		
without knob		72 g
with knob		118 g
Resistance range (E3-series)		47 Ω to 4,7 MΩ
Standard tolerance		± 20%
Resistance law		linear, see Fig. 6
Rated dissipation		
at 70 °C (P_{max})		0,15 W, see Fig. 5
at 40 °C		0,3 W
Limiting element voltage		500 V (d.c.)
Limiting wiper current		$\sqrt{\frac{P_{max}}{R_{nom}}}$
Terminal resistance		⩽ 2% of R_{nom}
Contact resistance variation (CRV)		⩽ 1% of R_{ac}
Temperature coefficient in the range −55 °C to + 100 °C		−500 to + 300 · 10^{-6}/K
Starting torque		⩽ 25 mNm
Operating torque		3,5 to 25 mNm
Permissible end-stop torque		max. 100 mNm
Total mechanical angle of rotation		230 ± 5°
Effective angle of rotation		210 ± 10°
Settability		0,1% within 10 s
Climatic category according to IEC 68-2		55/100/10
Climatic sequence		$\frac{\Delta R_{ac}}{R_{ac}} \leqslant 10\%$
Damp heat, steady state, 10 days max.	$R_{nom} \leqslant 100$ K	$\frac{\Delta R_{ac}}{R_{ac}} \leqslant 15\%$
	$R_{nom} > 100$ K	$\frac{\Delta R_{ac}}{R_{ac}} \leqslant 20\%$
Mechanical endurance (200 cycles)		$\frac{\Delta R_{ac}}{R_{ac}} \leqslant 5\%$
Electrical endurance (1000 h at 70 °C, cyclic)		$\frac{\Delta R_{ac}}{R_{ac}} \leqslant 10\%$
Resistance to soldering heat		$\frac{\Delta R_{ac}}{R_{ac}} \leqslant 2\%$
Bump		$\frac{\Delta R_{ac}}{R_{ac}} \leqslant 2\%$
Vibration		$\frac{\Delta R_{ac}}{R_{ac}} \leqslant 2\%$
		$\frac{\Delta V_{ab}}{V_{ab}} \leqslant 0{,}5\%$

DERATING

Potentiometers covered by this specification are derated from 100% rated dissipation at 40 °C to zero dissipation at 100 °C. The dissipation below 40 °C is the rated dissipation.

100% = 0,3 W

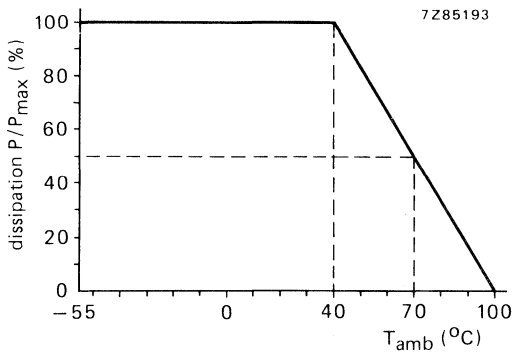

For $\Delta R_{ac} \leqslant 10\%$

Fig. 5 Dissipation as a function of ambient temperature.

RESISTANCE LAW

Potentiometers covered by this specification are linear.

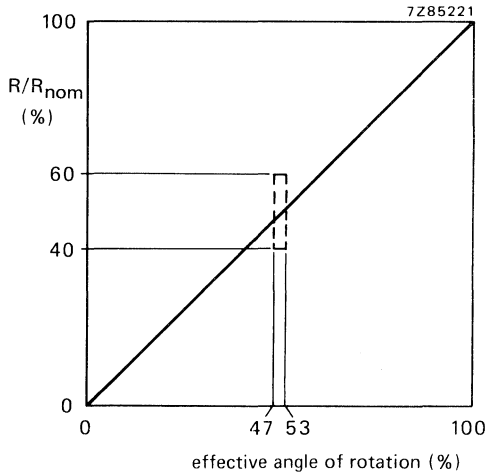

Fig. 6 Linear resistance law.

TESTS AND REQUIREMENTS

Clause numbers of tests and conditions of test refer to IEC 393-1 (potentiometers; part 1: terms and methods of test).

The potentiometers have been tested whilst mounted by their terminations on a printed wiring board. When drying is called for, procedure I of IEC 393-1, sub. 5,2 is used (24 ± 4 h, 55 ± 2 °C, R.H. ⩽ 20%). When the contact resistance variation (CRV) is measured, the wiper is rotated in both directions over 90% of the effective resistance.

IEC 393-1 clause	IEC 68-2 test method	test	procedure	typical result
6.22.3	T_a	Solderability	solder bath: 235° ± 5 °C, 2 ± 0,5 s	good tinning
6.22.4	Tb	Resistance to heat	solder bath: 350 ± 10 °C, 3,5 ± 0,5 s	$\frac{\Delta R_{ac}}{R_{ac}} \leqslant 0{,}5\%$
6.25	Eb	Bump	acceleration: 390 m/s² number of bumps: 4000	$\frac{\Delta R_{ac}}{R_{ac}} \leqslant 0{,}5\%$
6.24	Ec	Vibration	frequency: 10 to 500 Hz amplitude: 0,75 mm or 98 m/s², 6 h	$\frac{\Delta R_{ac}}{R_{ac}} \leqslant 1\%$ $\frac{\Delta V_{ab}}{V_{ab}} \leqslant 0{,}1\%$
6.13	–	Temperature characteristics of resistance	temp. cycle: +20 °C; −55 °C; +20 °C; +100 °C; +20 °C	$-300 < TC < +300 \cdot 10^{-6}/K$
6.26 6.26.2 6.26.3 6.26.4 6.26.6	– Ba Db Aa Db	Climatic sequence Dry heat Damp heat accel. 1st cycle Cold Damp heat, remaining cycle	 16 h at 100 °C 24 h at 55 °C 95 - 100% R.H. 2 h at −55 °C 24 h at 55 °C 95 - 100% R.H.	$\frac{\Delta R_{ac}}{R_{ac}} \leqslant 5\%$ operating torque ⩽ 30 mNm
6.30	–	Electrical endurance	T_{amb}: 70 °C, 1000 h, cyclic (1,5 h on and 0,5 h off, b at 0,67 a - c) Load: 0,15 W between a and c Load: 0,1 W between a and b	CRV < 1% of R_{ac} $\frac{\Delta R_{ac}}{R_{ac}} \leqslant 10\%$ $\frac{\Delta V_{ab}}{V_{ac}} \leqslant 0{,}5\%$ $\frac{\Delta R_{ab}}{R_{ab}} \leqslant 10\%$

IEC 393-1 clause	IEC 68-2 test method	test	procedure	typical result
6,29	–	Mechanical endurance	200 cycles, 4 cycles/min, no load	$\frac{\Delta R_{ac}}{R_{ac}} \leqslant 3\%$ CRV $< 0{,}5\%$ of R_{ac}
6.27	C	Damp heat steady state	slider at 0,67 a - c load via a - c recovery 24 h 22 ± 1 °C, 50% R.H. ± 5% (CECC 41 000 clause 4.29)	CRV $< 0{,}5\%$ of R_{ac} $\frac{\Delta R_{ac}}{R_{ac}} \leqslant 5\%$ $\frac{\Delta R_{ab}}{R_{ab}} \leqslant 5\%$ $\frac{\Delta V_{ab}}{V_{ac}} \leqslant 0{,}2\%$

18 mm CARBON PRESET POTENTIOMETERS

QUICK REFERENCE DATA

Resistance range (E3-series), linear law	100 Ω – 4,7 MΩ
Maximum dissipation at 25 °C	0,25 W

APPLICATION

These potentiometers are for preset resistance control with provision for re-adjustments. They are particularly suitable for use in radio and television receivers.

DESCRIPTION

These preset potentiometers comprise a carbon track, which is riveted on to a base plate of resin-bonded paper. They are provided with tin-plated printed-wiring pins. The pins a and c (see drawings) are connected to the ends of the carbon track; b is connected to the wiper. The wiper has a centre screwdriver slot.

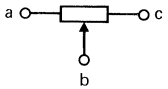

7Z85818

COMPOSITION OF THE CATALOGUE NUMBER

2322 411 0 . . . .

22 = with pins for vertical mounting (Fig. 1)
33 = with pins for horizontal mounting (Fig. 2)

code for resistance value, see table

MARKING

Nominal resistance and production code in ink on the base plate.

Outlines

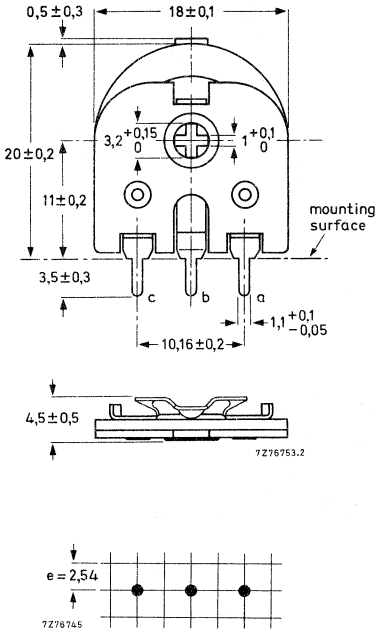

Fig. Potentiometer 2322 411 022 . .

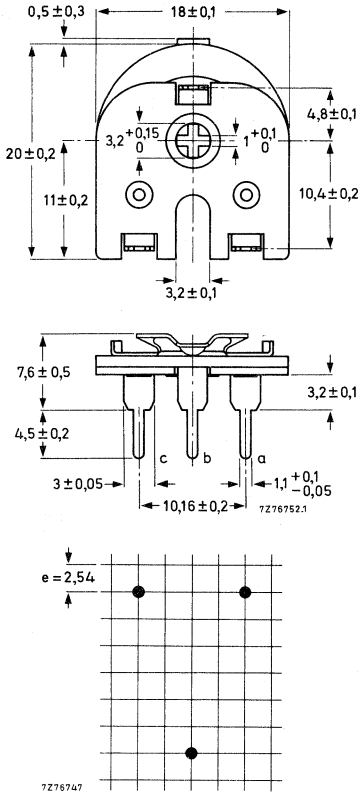

Fig. 2 Potentiometer 2322 411 033 . .

TECHNICAL DATA

nom. resistance R_n	max. terminal resistance Ω	V_{max} (d.c. or r.m.s.) at T_{amb} = 40 °C V	limiting wiper current mA	code in catalogue number
100 Ω	10	5	32	51
220 Ω	10	7	22	52
330 Ω	10	9	18	69
470 Ω	10	11	14	53
1 kΩ	25	16	10	54
2,2 kΩ	25	22	7	55
4,7 kΩ	100	35	4,5	56
10 kΩ	200	50	3,2	57
22 kΩ	400	70	2,2	58
47 kΩ	1 000	110	1,4	59
100 kΩ	2 000	160	1,0	61
220 kΩ	4 000	220	0,7	62
470 kΩ	10 000	370	0,45	63
1 MΩ	20 000	500	0,32	64
2,2 MΩ	40 000	500	0,22	65
4,7 MΩ	100 000	500	0,14	66

Tolerance on the nominal resistance	±20%
Resistance law	linear
Maximum dissipation	
at 25 °C	0,25 W
at 70 °C	0,15 W
Limiting voltage	500 V (d.c.) 500 V (r.m.s.)
Ambient temperature range	−25 to +70 °C
Resistance change after humidity test (21 days, T_{amb} = 40 °C, R.H. = 90 - 95%)	
after recovery of 1 h *	< 20%
after recovery of 24 h *	< 10%
Operating torque	5 to 35 mNm
Maximum end stop torque	100 mNm
Effective angle of rotation	200 ± 10°
Mechanical angle of rotation	215–225°
Temperature coefficient	−500 to +300 . 10^{-6}/K

* Preconditioning (min 48 h) and recovery at 23 ± 1 °C, R.H. = 50 ± 2%.

ENCLOSED 10 mm CARBON PRESET POTENTIOMETERS

QUICK REFERENCE DATA

Resistance range (E3-series), linear law	100 Ω to 4,7 MΩ *
Maximum dissipation	
at 40 °C	0,1 W
at 70 °C	0,05 W
Temperature coefficient	± 300 · 10^{-6}/K
Climatic category, IEC 68–2	25/85/10

DESCRIPTION

These preset potentiometers comprise a carbon resistive element on a phenolic paper base. The actuating device is a plastic rotor or a metal wiper. Adjustment is by means of cross or hexagonal slots. The overall width of 9,8 mm allows for high density use with air-gap isolation on a 2,5 mm grid; either horizontal or vertical mounting. The black glass-filled synthetic resin housing is fire resistant. The potentiometers, which are manufactured and tested fully automatically, offer stable, high quality performance and can be mounted by automatic insertion machines.

They are designed for video, audio and industrial applications and are especially suited for equipment in which automatic adjustment is practised. Versions with a hexagonal slot are available that can be provided with a knob to facilitate manual adjustment.

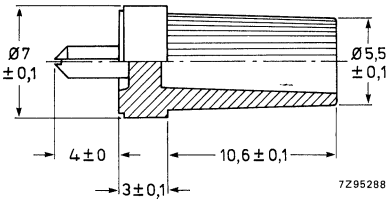

Example of a knob for versions with a hexagonal slot (cat. no. 4322 052 70710).

The terminals a and c are the end terminals; b is the central terminal connected to the slider. All terminals are either straight or snap-in pins for mounting on printed-wiring boards of nominal 1,0 to 1,6 mm thickness, grid pitch 2,5 or 2,54 mm.

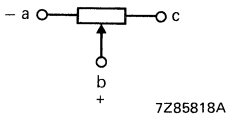

Terminal designation.

* 33 Ω and 47 Ω on request.

MECHANICAL DATA

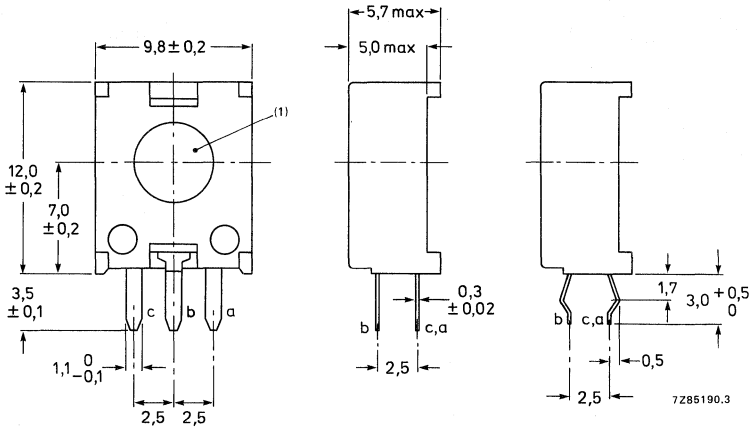

Fig. 1 Vertical mounting.

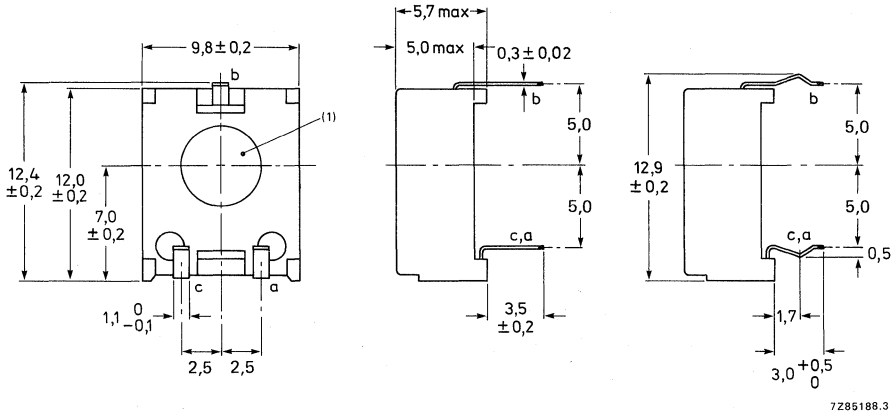

Fig. 2 Horizontal mounting.

* For details of available slots (cross, hexagonal, insulated or non-insulated wiper), see Figs 3, 4 and 5.

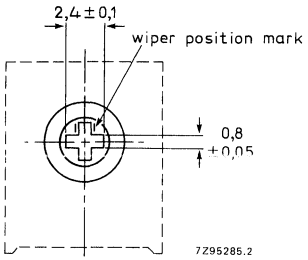

Fig. 3 Cross slot, non-insulated wiper for vertical and horizontal versions; straight pins only.

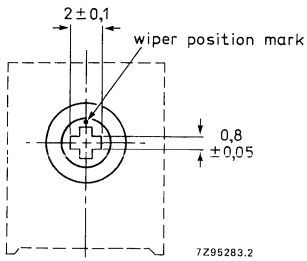

Fig. 4 Cross slot, insulated wiper for vertical and horizontal versions.

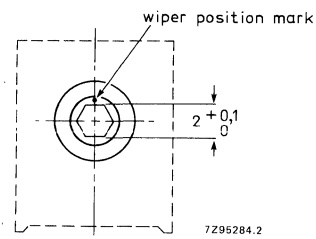

Fig. 5 Hexagonal slot, insulated wiper for vertical and horizontal versions.

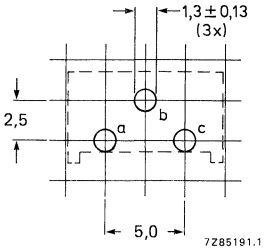

Fig. 6 Hole pattern for vertical versions, viewed from component side.

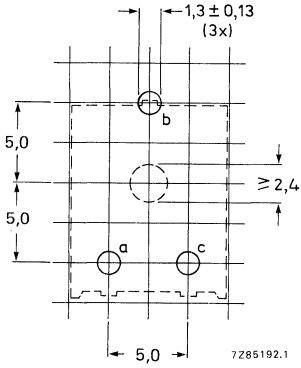

Fig . 7 Hole pattern for horizontal versions, viewed from component side.

Note: Snap-in pins are only available with versions having an insulated wiper.

TECHNICAL DATA

Mass		~ 0,6 g
Resistance range (E3-series)		100 Ω to 4,7 MΩ
Standard tolerance		± 20% and ± 10%
Resistance law		linear, see Fig. 9
Rated dissipation at 40 °C (P_{max})		0,1 W, see Fig. 8
Limiting element voltage		150 V (d.c.)
Limiting wiper current		$\sqrt{\frac{P_{max}}{R_{nom}}}$
Minimum effective resistance		⩽ 2% of R_{ac} or 10 Ω, whichever is greater
Rotational noise limits (contact resistance variation)		⩽ 1,0% of R_{nom}
Temperature coefficient in the range −25 °C to + 85 °C		± 300 · 10^{-6}/K
Operating torque		2 to 10 mNm
Permissible end-stop torque		max. 50 mNm
Permissible axial load on adjustment slot		20 N, max. 20 s
Total mechanical angle of rotation		300 ± 5°
Effective angle of rotation		285 ± 5°
Settability		0,2% within 10 s
Climatic category according to IEC 68–2		25/85/10
Climatic sequence	$\frac{\Delta R_{ac}}{R_{ac}}$	⩽ 5%
Damp heat, steady state, with or without load, between a and c, 10 days	$\frac{\Delta R_{ac}}{R_{ac}}$	⩽ 10%
Mechanical endurance (100 cycles)	$\frac{\Delta R_{ac}}{R_{ac}}$	⩽ 5%
Electrical endurance (1000 h at 70 °C, cyclic)	$\frac{\Delta R_{ac}}{R_{ac}}$	⩽ 5%
Resistance to soldering heat	$\frac{\Delta R_{ac}}{R_{ac}}$	⩽ 2%
Bump	$\frac{\Delta R_{ac}}{R_{ac}}$	⩽ 2%
Vibration	$\frac{\Delta R_{ac}}{R_{ac}}$	⩽ 2%
	$\frac{\Delta V_{ab}}{V_{ac}}$	⩽ 0,5%

DERATING

Potentiometers covered by this specification are derated from 100% rated dissipation at 40 °C to zero dissipation at 85 °C. The dissipation below 40 °C is the rated dissipation.

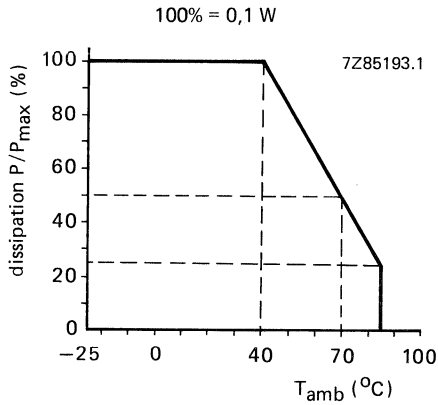

Fig. 8 Dissipation as a function of ambient temperature.

RESISTANCE

Potentiometers covered by this specification are linear.

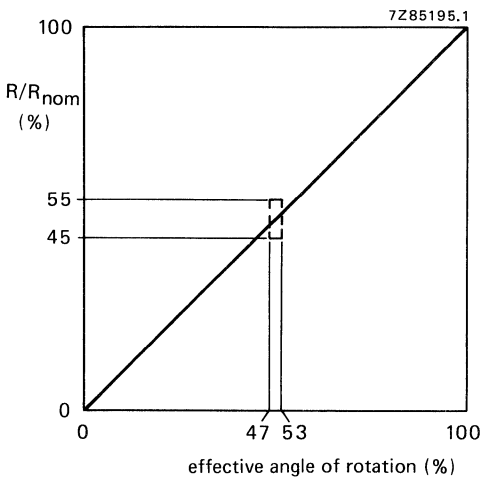

Fig. 9 Linear resistance law.

MARKING

The potentiometers are marked with the rated resistance, according to IEC 62, e.g. 220 Ω = 220 R; 10 kΩ = 10 k; 1 MΩ = 1 MO.

The package is marked with:
- catalogue number,
- date of production,
- quantity.

PACKAGING

The potentiometers can be supplied in bulk packaging of 1000 in a cardboard box or, especially for automatic insertion, in anti-static rail packaging of 50 per rail, 20 rails in a box. The outside dimensions of the rails, which have rubber stops at both ends, are given in Fig. 10.

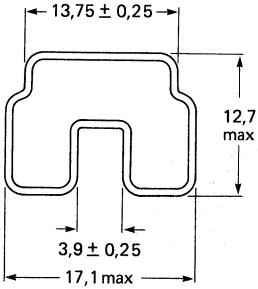

For horizontal versions.

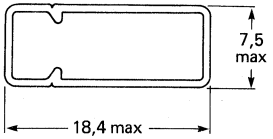

For vertical versions.

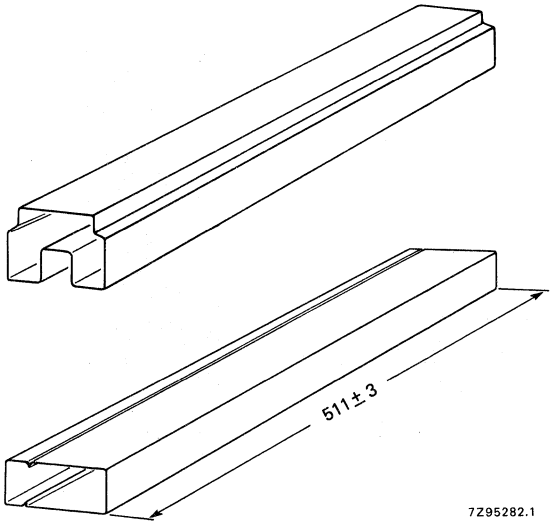

Fig. 10 Outlines of the rail packaging.

COMPOSITION OF THE CATALOGUE NUMBER

2322 483 . . . . .

code for version

0 = vertical, non-insulated cross slot
1 = vertical, insulated hexagonal slot
2 = vertical, insulated cross slot
5 = horizontal, non-insulated cross slot
6 = horizontal, insulated hexagonal slot
7 = horizontal, insulated cross slot

code for tolerance, tags, packaging

2 = ± 20%, snap-in pins, bulk packaging
3 = ± 10%, snap-in pins, bulk packaging
4 = ± 20%, straight pins, bulk packaging
5 = ± 10%, straight pins, bulk packaging
6 = ± 20%, snap-in pins, rail packaging
7 = ± 10%, snap-in pins, rail packaging
8 = ± 20%, straight pins, rail packaging
9 = ± 10%, straight pins, rail packaging

resistance code

101 = 100 Ω
221 = 220 Ω
471 = 470 Ω
102 = 1 kΩ
222 = 2,2 kΩ
472 = 4,7 kΩ
103 = 10 kΩ
223 = 22 kΩ
473 = 47 kΩ
104 = 100 kΩ
224 = 220 kΩ
474 = 470 kΩ
105 = 1 MΩ
225 = 2,2 MΩ
475 = 4,7 MΩ

TESTS AND REQUIREMENTS

Clause numbers of tests and conditions of test refer to IEC 393–1 (potentiometers, part 1: terms and methods of test).

The potentiometers have been tested whilst mounted by their terminations on a printed wiring board.

When drying is called for procedure I of IEC 393–1, sub. 5.2. is used (24 ± 4 h, 55 ± 2 °C, R.H. 20%).

When the contact resistance variation (CRV) is measured, the wiper is rotated in both directions over 90% of the effective resistance for a total of 6 cycles. The maximum deviations in the last 3 cycles are taken into account. Wiper speed: 2 cycles/minute; bandwidth 10 Hz to 5 kHz.

IEC 393–1 clause	IEC 68–2 test method	test	procedure	typical result
6.22.3	T	Solderability	solder bath: 230 ± 10 °C	good tinning
6.22.4	Tb	Resistance to heat	solder bath: 350 ± 10 °C 3,5 ± 0,5 s	$\frac{\Delta R_{ac}}{R_{ac}} \leqslant 0{,}5\%$
6.25	Eb	Bump	acceleration: 390 m/s² number of bumps: 4000	$\frac{\Delta R_{ac}}{R_{ac}} \leqslant 2\%$ $\frac{\Delta V_{ab}}{V_{ac}} \leqslant 0{,}5\%$

IEC 393–1 clause	IEC 68–2 test method	test	procedure	typical result
6.24	Fc	Vibration	frequency: 10 - 500 Hz amplitude: 0,75 mm or 98 m/s², 6 h	$\frac{\Delta R_{ac}}{R_{ac}} \leqslant 2\%$ $\frac{\Delta V_{ab}}{V_{ac}} \leqslant 0{,}3\%$
6.13		Temperature characteristic of resistance	temp. cycle: + 20 °C; –25 °C; + 20 °C; + 70 °C + 20 °C	$-300 < TC < +300 \cdot 10^{-6}/K$
6.26	–	Climatic sequence		
6.26.2	Ba	Dry heat	16 h at 85 °C	$\frac{\Delta R_{ac}}{R_{ac}} \leqslant 5\%$
6.26.3	D	Damp heat, accel. 1st cycle	24 h at 55 °C 95 - 100% R.H.	
6.26.4	Aa	Cold	2 h at –25 °C	
6.26.6	D	Damp heat remaining cycle	24 h at 55 °C 95 - 100% R.H.	
(6.30)	–	Electrical endurance	T_{amb}: 70 °C, 1000 h cycle (1,5 h on and 0,5 h off, b at 0,67 a - c) Load: 0,05 W between a and c	CRV < 2% of R_{nom} $\frac{\Delta R_{ac}}{R_{ac}} \leqslant 5\%$ $\frac{\Delta V_{ab}}{V_{ac}} \leqslant 0{,}5\%$
			Load: 0,033 W between a and b	$\frac{\Delta R_{ab}}{R_{ab}} \leqslant 5\%$
6.29	–	Mechanical endurance	100 cycles, 4 cycles/min no load	$\frac{\Delta R_{ac}}{R_{ac}} \leqslant 5\%$ ($\leqslant$ 10% for R_{nom} = 4,7 MΩ) CRV < 1,0% of R_{nom}
(6.27)	C	Damp heat steady state	wiper at 0,67 a - c *no load;* 21 days; recovery 24 h, 22 ± 1 °C, 50% R.H. ± 5%	CRV < 1,0% of R_{nom} $\frac{\Delta R_{ac}}{R_{ac}} \leqslant 5\%$ $\frac{\Delta R_{ab}}{R_{ab}} \leqslant 5\%$ $\frac{\Delta V_{ab}}{V_{ac}} \leqslant 0{,}2\%$
(6.27)	C	Damp heat steady state	*with load* between a and c, 10 days; recovery 24 h, 22 °C ± 1 °C, 50% R.H. ± 5%	$\frac{\Delta R_{ac}}{R_{ac}} \leqslant 10\%$ ($\leqslant$ 15% for R_{nom} = 4,7 MΩ)

10 mm CERMET PRESET POTENTIOMETERS

QUICK REFERENCE DATA

Resistance range (E6-series), linear law	100 Ω to 6,8 MΩ
Maximum dissipation at 70 °C	0,5 W
Climatic category, IEC 68	55/125/56

APPLICATION

These potentiometers are for preset resistance control with provision for re-adjustments. They are particularly suitable for use in professional apparatus and/or in those applications where stability is of extreme importance.

DESCRIPTION

These potentiometers comprise a resistance element of thick film, with particles of conductive metal dispersed in it. The element is supported by a non-conductive temperature-resistant ceramic base. The terminals a and c (see Figs 1 to 3) are connected to the ends of the resistance element; terminal b is connected to the wiper.

The potentiometers are available in versions for horizontal and vertical mounting on printed-wiring boards.

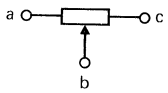

7Z85818

Fig. 1 Terminal allocations.

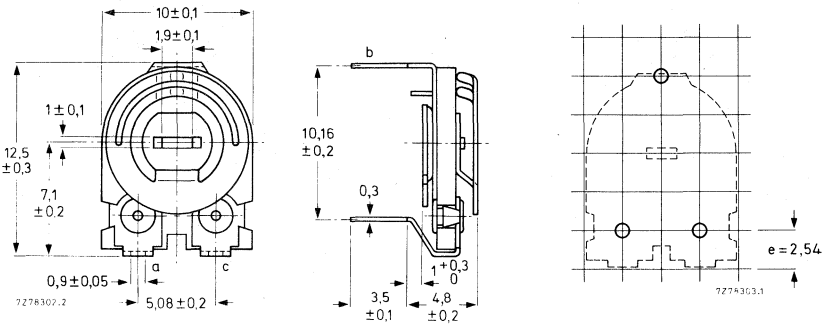

Fig. 2 Potentiometer for horizontal mounting, 2322 482 4 . . . .

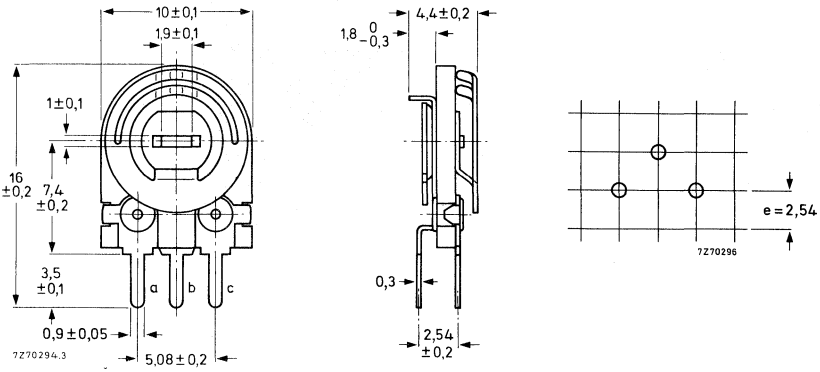

Fig. 3 Potentiometer for vertical mounting, 2322 482 3 . . . .

TECHNICAL DATA

Unless stated otherwise, all electrical values have been determined at an ambient temperature of 15 to 35 °C, an air pressure of 860 to 1060 hPa and a relative humidity of 45 to 75%. For terms and test methods see IEC publication 393-1.

Nominal resistance (R_{nom})	100 Ω to 6,8 MΩ, see Table 1
Tolerance on the nominal resistance	± 20% and ± 10%
Resistance law and tolerances	linear, see Fig. 4
Terminal resistance	⩽ 0,5% of R_{ac} or 2 Ω, whichever is the greater
Contact resistance variation (CRV)	⩽ 0,5% of R_{ac}
Maximum dissipation (P_{max}) at 70 °C	0,5 W, see Fig. 5

Limiting voltage (d.c.)	250 V
Limiting wiper current	$\sqrt{\left(\frac{P_{max}}{R_{ac}}\right)}$
Operating temperature range	−55 to + 125 °C
Temperature coefficient	
$R_{nom} \leqslant 1\ M\Omega$	$\pm 50 \cdot 10^{-6}/K$
$R_{nom} > 1\ M\Omega$	$\pm 100 \cdot 10^{-6}/K$
Operating torque	4 to 30 mNm
Permissible end stop torque	⩽ 50 mNm
Effective angle of rotation	220 ± 5°
Mechanical angle of rotation	235 ± 5°
Rotational life	200 cycles
Settability	0,1% of R_{ac} within 10 s
Mass	approx. 0,8 g

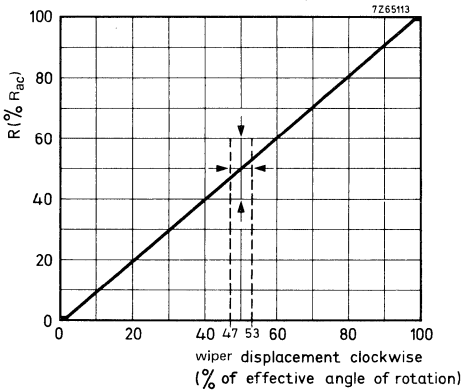

Fig. 4 Linear law.

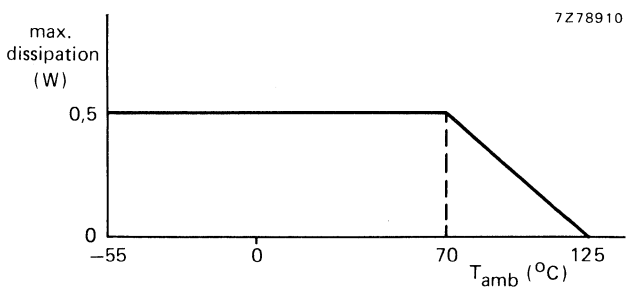

Fig. 5 Maximum dissipation as a function of ambient temperature.

COMPOSITION OF THE CATALOGUE NUMBER

2322 482 . . . . .

code for version

3 = potentiometer for vertical mounting, according to Fig. 3
4 = potentiometer for horizontal mounting, according to Fig. 2

code for nominal resistance, see Table 1

code for tolerance
0 = ± 20%
2 = ± 10%

Table 1

nominal resistance	code in cat. number	nominal resistance	code in cat. number
100 Ω	101	33 kΩ	333
150 Ω	151	47 kΩ	473
220 Ω	221	68 kΩ	683
330 Ω	331	100 kΩ	104
470 Ω	471	150 kΩ	154
680 Ω	681	220 kΩ	224
1 kΩ	102	330 kΩ	334
1,5 kΩ	152	470 kΩ	474
2,2 kΩ	222	680 kΩ	684
3,3 kΩ	332	1 MΩ	105
4,7 kΩ	472	1,5 MΩ	155
6,8 kΩ	682	2,2 MΩ	225
10 kΩ	103	3,3 MΩ	335
15 kΩ	153	4,7 MΩ	475
22 kΩ	223	6,8 MΩ	685

TESTS AND REQUIREMENTS

Clause numbers of tests and conditions of test refer to IEC 393–1 (potentiometers, part 1: terms and methods of test).

The potentiometers have been tested whilst mounting by their terminations on a printed-wiring board.

When drying is called for, procedure I of IEC 393–1, sub. 5.2. is used (24 ± 4 h, 55 ± 2 °C, R.H. 20%).

When the contact resistance variation (CRV) is measured, the wiper is rotated in both directions over 90% of the effective resistance for a total of 6 cycles. The maximum deviations in the last 3 cycles are taken into account. Wiper speed: 2 cycles/minute; bandwidth 10 Hz to 5 kHz.

IEC 393–1 clause	IEC 68–2 test method	test	procedure	typical result
6.22.3	T	Solderability	solder bath: 230 ± 10 °C, 2 ± 0,5 s	good tinning
6.22.4	Tb	Resistance to heat	solder bath: 350 ± 10 °C 3,5 ± 0,5 s	$\frac{\Delta R_{ac}}{R_{ac}} \leqslant 0{,}1\%$
6.25	Eb	Bump	acceleration: 40g number of bumps: 4000	$\frac{\Delta R_{ac}}{R_{ac}} \leqslant 0{,}1\%$
6.24	Fc	Vibration	frequency: 10 - 500 Hz amplitude: 0,75 mm or 10g, 3 directions, 2h per direction	$\frac{\Delta R_{ac}}{R_{ac}} \leqslant 0{,}1\%$ $\frac{\Delta V_{ab}}{V_{ac}} \leqslant 0{,}2\%$
6.13		Temperature characteristic of resistance	temp. cycle: + 20 °C; –25 °C; + 20 °C; + 70 °C + 20 °C	$-50 < TC < +50.10^{-6}/K$
6.23	Na	Change of temperature	–55 °C and + 125 °C; 5 cycles, ½ h	$\frac{\Delta R_{ac}}{R_{ac}} \leqslant 0{,}5\%$ $\frac{\Delta V_{ab}}{V_{ac}} \leqslant 0{,}1\%$
6.26	–	Climatic sequence		
6.26.2	Ba	Dry heat	16 h at 70 °C	$\frac{\Delta R_{ac}}{R_{ac}} \leqslant 0{,}5\%$ operating torque ⩽ 36 mNm
6.26.3	Db	Damp heat accel. 1st cycle	24 h at 55 ± 2 °C 95 - 100% R.H.	
6.26.4	Aa	Cold	2 h at –55 ± 3 °C	
6.26.6	D	Damp heat, remaining cycle	24 h at 55 ± 2 °C 95 - 100% R.H.	
6.30	–	Electrical endurance	T_{amb}: 70 °C, 1000 h cyclic (1,5 h on and 0,5 h off, b at 0,67 ac)	CRV < 1% of R_{nom}
			Load: 0,5 W between a and c	$\frac{\Delta R_{ac}}{R_{ac}} \leqslant 1\%$ $\frac{\Delta V_{ab}}{V_{ac}} \leqslant 0{,}2\%$
			Load: 0,33 W between a and b	$\frac{\Delta R_{ab}}{R_{ab}} \leqslant 3\%$

IEC 393–1 clause	IEC 68–2 test method	test	procedure	typical result
6.29	–	Mechanical endurance	200 cycles, 4 cycles/min no load	$\frac{\Delta R_{ac}}{R_{ac}} \leqslant 2\%$ CRV < 0,5% of R_{nom}
6.27	Ca	Damp heat steady state	b at 0,67 a - c no load; 56 days	CRV < 0,5% of R_{nom} $\frac{\Delta R_{ac}}{R_{ac}} \leqslant 0{,}5\%$ $\frac{\Delta R_{ab}}{R_{ab}} \leqslant 1\%$ $\frac{\Delta V_{ab}}{V_{ac}} \leqslant 0{,}2\%$
			load a - c 0,05 W	$\frac{\Delta R_{ac}}{R_{ac}} \leqslant 0{,}5\%$ $\frac{\Delta V_{ab}}{V_{ac}} \leqslant 0{,}2\%$
			load a - c 0,03 W	$\frac{\Delta R_{ab}}{R_{ab}} \leqslant 2\%$
Immersion in cleaning solvents		Immersion in boiling mixture of 1.1.2. trichlorotrifluoraethane and isopropanol (75%/25%) for 5 ± 0,5 min., followed by 5 min drying (rubbing or wrapping excluded).		Marking legible, no damage. $\Delta R_{ac}/R_{ac} \leqslant 0{,}5\%$; CRV $\leqslant$ 0,5%; operating torque: 2 to 10 mNm.

ENCLOSED 10mm CERMET PRESET POTENTIOMETERS

QUICK REFERENCE DATA

Resistance range (E6-series), linear law	47 Ω to 10 MΩ
Maximum dissipation at 40 °C	0,5 W
Climatic category, IEC 68-2	55/125/56

DESCRIPTION

These preset potentiometers comprise a metal-glaze resistive element on a ceramic base. The actuating device is a plastic rotor. Adjustment is by means of insulated hexagonal or cross slots. The overall width of 9,8 mm alows for high density use with air-gap isolation on a 2,5 mm grid; either horizontal or vertical mounting. The glass-filled synthetic resin housing is fire resistant. The potentiometers, which are manufactured fully automatically, offer stable high quality performance and can be mounted by automatic insertion machines.

They are designed for video, audio and industrial applications and are especially suited for equipment in which automatic adjustment is practised. Versions with a hexagonal slot are available that can be provided with a knob to facilitate manual adjustment.

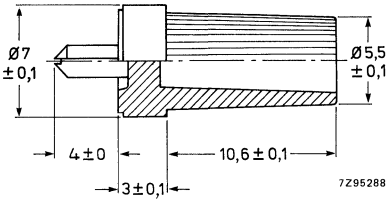

Example of a knob for versions with a hexagonal slot (cat. no. 4322 052 70710).

The terminals a and c are the end terminals; b is the central terminal connected to the slider. All terminals are either straight or snap-in pins for mounting on printed-wiring boards of nominal 1,0 to 1,6 mm thickness, grid pitch 2,5 or 2,54 mm.

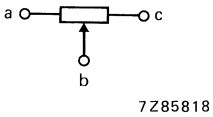

Terminal designation.

MECHANICAL DATA

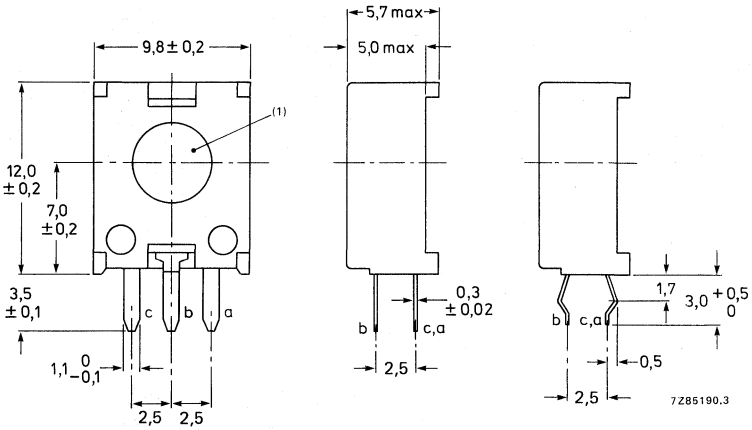

Fig. 1 Vertical mounting version.

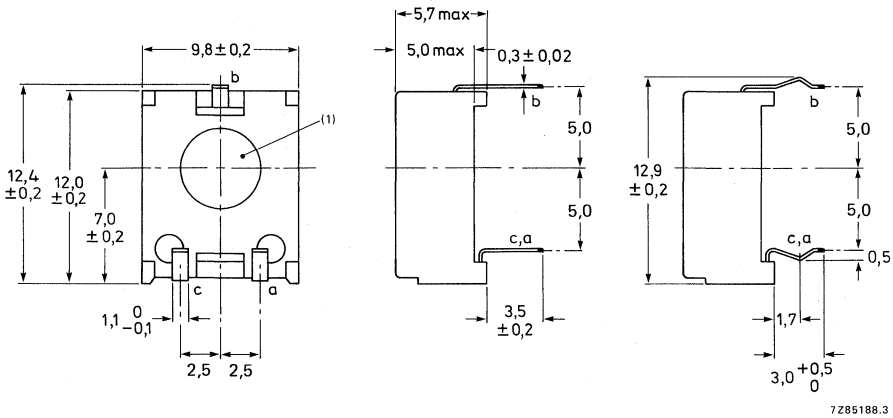

Fig. 2 Horizontal mounting.

* For details of available slots see Figs 3 and 4.

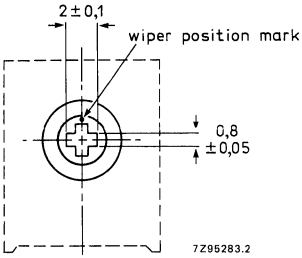

Fig. 3 Cross slot.

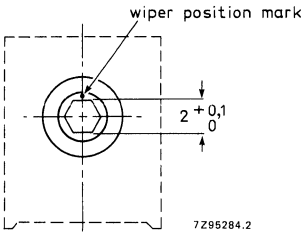

Fig. 4 Hexagonal slot.

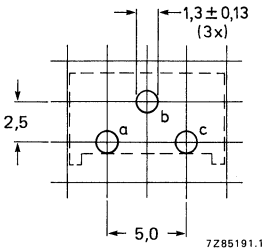

Fig. 5 Hole pattern for vertical versions, viewed from component side.

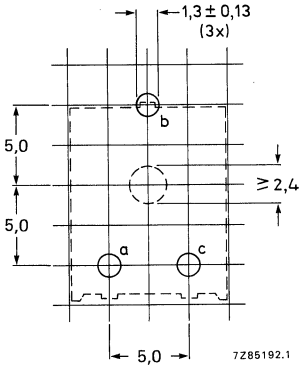

Fig. 6 Hole pattern for horizontal versions, viewed from component side.

TECHNICAL DATA

Mass		~ 0,8 g
Resistance range (E6-series)		47 Ω to 10 MΩ
Standard tolerance		± 20% and ± 10%
Resistance law		linear, see Fig. 8
Rated dissipation at 40 °C (P_{max})		0,5 W, see Fig. 7
Limiting element voltage		250 V (d.c.)
Limiting wiper current		$\sqrt{\frac{P_{max}}{R_{nom}}}$
Minimum effective resistance		⩽ 0,5% of R_{ac} or 2 Ω, whichever is greater
Rotational noise limits (contact resistance variation)		⩽ 1,0% of R_{nom}
Temperature coefficient in the range −55 °C to + 125 °C		
$R_{nom} \leqslant 100\ \Omega$		$\pm 200 \cdot 10^{-6}$/K
$100 < R_{nom} < 1\ M\Omega$		$\pm 50 \cdot 10^{-6}$/K
$R_{nom} \leqslant 1\ M\Omega$		$\pm 100 \cdot 10^{-6}$/K
Operating torque		3 to 20 mNm
Permissible end-stop torque		max. 50 mNm
Total mechanical angle of rotation		300 ± 5°
Effective angle of rotation		295 ± 5°
Settability		0,1% within 10 s
Climatic category according to IEC 68-2		55/125/56
Climatic sequence	$\frac{\Delta R_{ac}}{R_{ac}}$	⩽ 2%
Damp heat, steady state	$\frac{\Delta R_{ac}}{R_{ac}}$	⩽ 2%
Mechanical endurance (200 cycles)	$\frac{\Delta R_{ac}}{R_{ac}}$	⩽ 2%
Electrical endurance (1000 h at 70 °C, cyclic)	$\frac{\Delta R_{ac}}{R_{ac}}$	⩽ 2%
Change of temperature (between −55 °C and + 125 °C)	$\frac{\Delta R_{ac}}{R_{ac}}$	⩽ 2%
	$\frac{\Delta V_{ab}}{V_{ac}}$	⩽ 1%
Resistance to soldering heat	$\frac{\Delta R_{ac}}{R_{ac}}$	⩽ 0,5%
Bump	$\frac{\Delta R_{ac}}{R_{ac}}$	⩽ 1%
Vibration	$\frac{\Delta R_{ac}}{R_{ac}}$	⩽ 1%
	$\frac{\Delta V_{ab}}{V_{ac}}$	⩽ 0,5%

DERATING

Potentiometers covered by this specification are derated from 100% rated dissipation at 40 °C to zero dissipation at 125 °C. The dissipation below 40 °C is the rated dissipation.

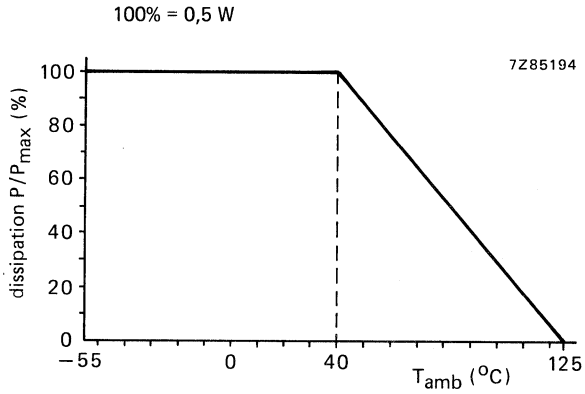

Fig. 7 Dissipation as a function of ambient temperature.

RESISTANCE LAW

Potentiometers covered by this specification are linear.

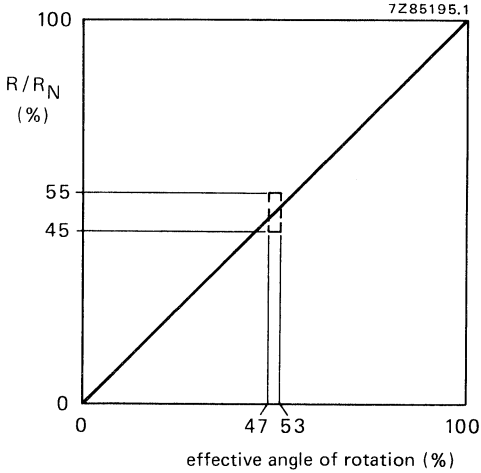

Fig. 8 Linear resistance law.

MARKING

The potentiometers are marked with the rated resistance, according to IEC 62, e.g. 220 Ω = 220 R; 10 kΩ = 10 k; 1 MΩ = 1 MO.

The package is marked with:
- catalogue number,
- date of production,
- quantity.

PACKAGING

The potentiometers can be supplied in bulk packaging of 1000 in a cardboard box or, especially for automatic insertion, in anti-static rail packaging of 50 per rail, 20 rails in a box. The outside dimensions of the rails, which have rubber stops at both ends, are given in Fig. 10.

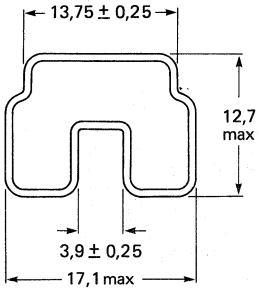

For horizontal versions.

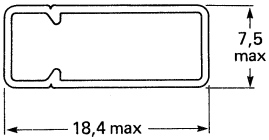

For vertical versions.

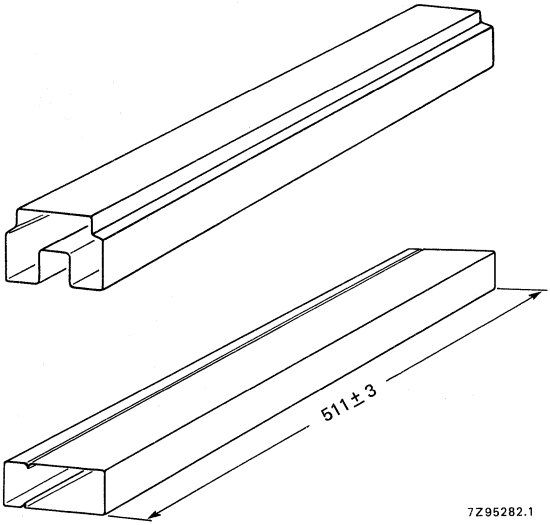

Fig. 10 Outlines of the rail packaging.

COMPOSITION OF THE CATALOGUE NUMBER

2322 484 . . . . .

code for version

1 = vertical, hexagonal slot
2 = vertical, cross slot
6 = horizontal, hexagonal slot
7 = horizontal, cross slot

code for tolerance, tags, packaging

2 = ± 20%, snap-in pins, bulk packaging
3 = ± 10%, snap-in pins, bulk packaging
4 = ± 20%, straight pins, bulk packaging
5 = ± 10%, straight pins, bulk packaging
6 = ± 20%, snap-in pins, rail packaging
7 = ± 10%, snap-in pins, rail packaging
8 = ± 20%, straight pins, rail packaging
9 = ± 10%, straight pins, rail packaging

resistance code

479 = 47 Ω	333 = 33 kΩ
689 = 68 Ω	473 = 47 kΩ
101 = 100 Ω	683 = 68 kΩ
151 = 150 Ω	104 = 100 kΩ
221 = 220 Ω	154 = 150 kΩ
331 = 330 Ω	224 = 220 kΩ
471 = 470 Ω	334 = 330 kΩ
681 = 680 Ω	474 = 470 kΩ
102 = 1 kΩ	684 = 680 kΩ
152 = 1,5 kΩ	105 = 1 MΩ
222 = 2,2 kΩ	155 = 1,5 MΩ
332 = 3,3 kΩ	225 = 2,2 MΩ
472 = 4,7 kΩ	335 = 3,3 MΩ
682 = 6,8 kΩ	475 = 4,7 MΩ
103 = 10 kΩ	685 = 6,8 MΩ
153 = 15 kΩ	106 = 10 MΩ
223 = 22 kΩ	

TESTS AND REQUIREMENTS

Clause numbers of tests and conditions of test refer to IEC 393–1 (potentiometers, part 1: terms and methods of test).

The potentiometers have been tested whilst mounted by their terminations on a printed wiring board.

When drying is called for procedure I of IEC 393–1, sub 5.2. is used (24 ± 4 h, 55 ± 2 °C, R.H. 20%).

When the contact resistance variation (CRV) is measured, the wiper is rotated in both directions over 90% of the effective resistance for a total of 6 cycles. The maximum deviations in the last 3 cycles are taken into account. Wiper speed: 2 cycles/minute; bandwidth 10 Hz to 5 kHz.

IEC 393–1 clause	IEC 68–2 test method	test	procedure	typical result
6.22.3	T	Solderability	solder bath: 230 ± 10 °C, 2 ± 0,5 s	good tinning
6.22.4	Tb	Resistance to heat	solder bath: 350 ± 10 °C, 3,5 ± 0,5 s	$\frac{\Delta R_{ac}}{R_{ac}} \leqslant 0{,}1\%$
6.25	Eb	Bump	acceleration: 390 m/s^2 number of bumps: 4000	$\frac{\Delta R_{ac}}{R_{ac}} \leqslant 0{,}1\%$
6.24	Fc	Vibration	frequency: 10 - 500 Hz amplitude: 0,75 mm or 98 m/s^2, 6 h	$\frac{\Delta R_{ac}}{R_{ac}} \leqslant 0{,}5\%$ $\frac{\Delta V_{ab}}{V_{ac}} \leqslant 0{,}3\%$

IEC 393–1 clause	IEC 68–2 test method	test	procedure	typical result
6.13		Temperature characteristic of resistance	temp. cycle: + 20 °C; –25 °C; + 20 °C; + 70 °C; + 20 °C	$-50 < TC < +50 \cdot 10^{-6}/K$
6.23	Na	Change of temperature	–55 °C and + 125 °C; 5 cycles	$\frac{\Delta R_{ac}}{R_{ac}} \leqslant 0{,}5\%$ $\frac{\Delta V_{ab}}{V_{ac}} \leqslant 0{,}1\%$
6.26 6.26.2 6.26.3 6.26.4 6.26.6	– Ba D Aa D	Climatic sequence Dry heat Damp heat accel. 1st cycle Cold Damp heat, remaining cycle	 16 h at 125 °C 24 h at 55 °C 95 - 100% R.H. 2 h at –55 °C 24 h at 55 °C 95 - 100% R.H.	$\left.\frac{\Delta R_{ac}}{R_{ac}} \leqslant 0{,}5\%\right\}$
(6.30)	–	Electrical endurance	T_{amb}: 40 °C, 1000 h, cyclic (1,5 h on and 0,5 h off, b at 0,67 ac) Load: 0,5 W between a and c Load: 0,33 W between a and b	CRV < 1% of R_{nom} $\frac{\Delta R_{ac}}{R_{ac}} \leqslant 1\%$ $\frac{\Delta V_{ab}}{V_{ac}} \leqslant 0{,}5\%$ $\frac{\Delta R_{ab}}{R_{ab}} \leqslant 5\%$
6.29	–	Mechanical endurance	200 cycles, 4 cycles/min no load	$\frac{\Delta R_{ac}}{R_{ac}} \leqslant 1\%$ CRV < 1% of R_{nom}
(6.27)	C	Damp heat steady state	wiper at 0,67 a - c no load; recovery 24 h at 22 ± 1 °C, 50% R.H. ± 5%	CRV < 1% of R_{nom} $\frac{\Delta R_{ac}}{R_{ac}} \leqslant 1\%$ $\frac{\Delta R_{ab}}{R_{ab}} \leqslant 2\%$ $\frac{\Delta V_{ab}}{V_{ac}} \leqslant 0{,}2\%$

MULTITURN CARBON POTENTIOMETERS

MULTI-TURN CARBON PRESET POTENTIOMETERS

QUICK REFERENCE DATA

Nominal resistance	
linear law	100 Ω – 4,7 MΩ
logarithmic law	1 kΩ – 2,2 MΩ
special law	100 kΩ
Number of turns of spindle	
potentiometers CMP10	10
potentiometers CMP20	20
potentiometers CMP40	40
Climatic category (IEC 68)	25/070/21

APPLICATION

The potentiometers are for preset tuning adjustment in variable capacitance diode television tuners, but can also be used for variable capacitance diode tuning radio receivers, or for any other fine resistance adjustment.

DESCRIPTION

A straight carbon track is fitted on to a base plate of resin-bonded paper, which is mounted in a housing of black synthetic resin. The terminals are suited for mounting on printed-wiring boards. The slider is activated by a silvered threaded spindle. The potentiometer will not be damaged if the spindle is turned beyond its extreme position. The potentiometers can be supplied with various adjustments and with or without a scale indicator.

All versions are available with linear or logarithmic resistance law; the 100 kΩ versions are also available with special resistance law.

COMPOSITION OF THE CATALOGUE NUMBER

2322 41 . . . . .

code for number of turns of spindle
2 = 20 turns, type CMP20
3 = 10 turns, type CMP10
4 = 40 turns, type CMP40

code for indicator, see Indicators

code for nominal resistance value, see Table 1

code for adjustment provision, see Adjustment provisions.

MECHANICAL DATA

Dimensions of the housing (mm)

The housing has been drawn without scale indicator and adjustment provision; these parts are described in the relevant paragraph.

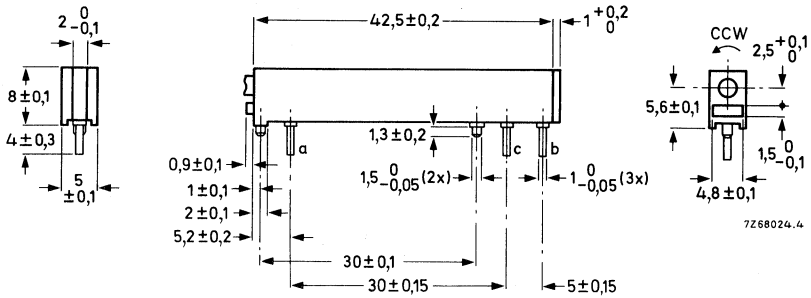

Fig. 1 Terminals a and c are connected to the ends of the carbon track; terminal b is connected to the slider contact.

Operating temperature range	−25 to + 70 °C
Climatic category (IEC 68)	25/070/21
Operating torque	1,5 to 10 mNm
Number of turns of spindle	
potentiometers CMP10	9½ ± ½
potentiometers CMP20	19 ± ½
potentiometers CMP40	38 ± 1
Maximum permissible axial spindle load (push and pull)	⩽ 2,5 N
Mechanical travel of slider contact	25,6 ± 0,3 mm
Effective travel of slider contact	24 − 1 mm
Solderability (to IEC 68-2, test T)	230 ± 10 °C, for 2 ± 0,5 s
Thermal shock test (to IEC 68-2, test T)	350 ± 10 °C, for 2 ± 0,5 s
Life (at a rate of 20 rev/min)	50 x in both directions + 3 rotations at both ends

MOUNTING

The terminals may be dip-soldered to a depth of 2 mm max in a solder bath of 260 °C max for 4 s max. When a soldering bit is used, its temperature must not exceed 360 °C for 1,5 s and neither axial nor radial stress must be exerted on the terminals.

MARKING

The potentiometers are marked with nominal resistance, resistance law, period and year of manufacture.

Indicators

type	colour	code in catalogue number 2322 41 . . . . .
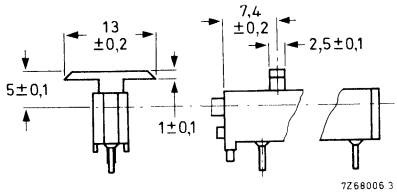	red	1
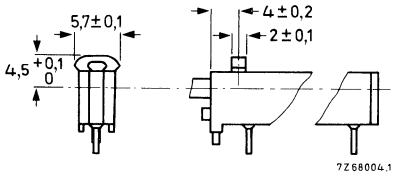	red	3
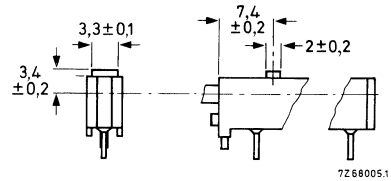	yellow	4
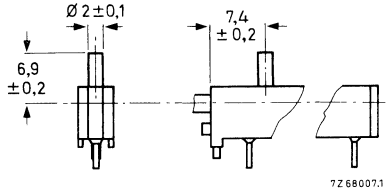	red	5
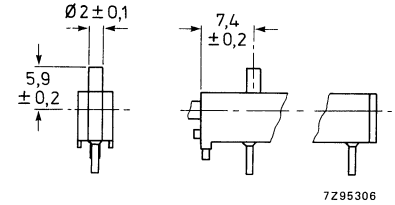	red	7

type	colour	code in catalogue number 2322 41 . . . . .
without indicator		0
without indicator, with black dust cover on the housing 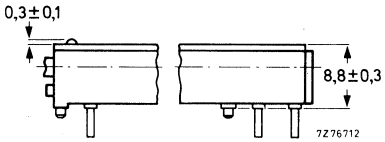		8

Adjustment provisions

type	colour	code in catalogue number 2322 41 . . . . .
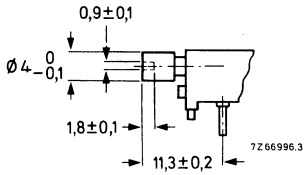	grey	51
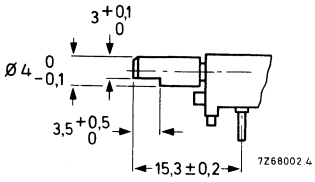	grey	52
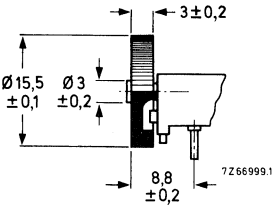 Knob: approx. 60 notches	red	61

type	colour	code in catalogue number 2322 41 . . . . .
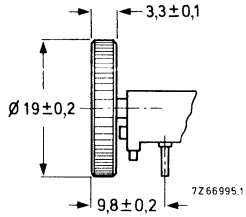 Knob: approx. 48 notches	black	62
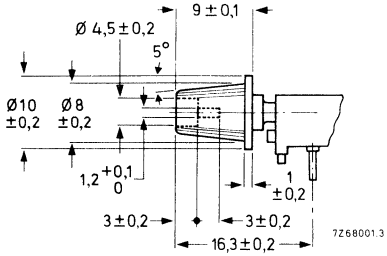	black	63
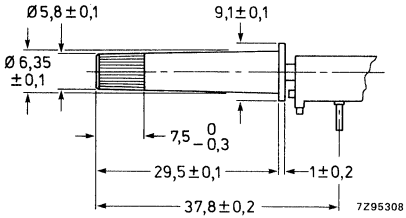 Knob with cross shaped trimming slot 4,4 x 1,6	black	69 ←
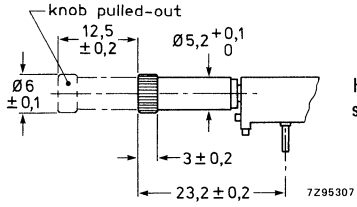 Knob with trimming slot 4,4 x 0,8	black	71 ←
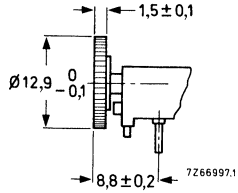 number of teeth = 24 tooth height = 1,2	white	82

ELECTRICAL DATA

Unless stated otherwise, all electrical values have been determined at an ambient temperature of 15 to 35 °C, an air pressure of 86 to 106 kPa and a relative humidity of 45 to 75%.

Table 1

nominal resistance R_{nom}	resist. law	max. voltage (V d.c. or V a.c.) T_{amb} = 40 °C $\Delta R < 20\%$ (note 1)	T_{amb} = 40 °C $\Delta R < 10\%$ (note 1)	T_{amb} = 70 °C $\Delta R < 20\%$ (note 1)	maximum terminal resistance	max. atten-uation dB	limiting slider current mA	code in cat. no.
100 Ω	linear	5,5	5,0	3,9	10 Ω	20	55	01
220 Ω		8,1	7,4	5,7	20 Ω	20	37	02
470 Ω		11,8	10,8	8,4	35 Ω	30	25	03
1 kΩ		17	15,8	12,2	50 Ω	30	17	04
2,2 kΩ		26	23	18	100 Ω	40	11	05
4,7 kΩ		37	34	24	200 Ω	40	8	06
10 kΩ		53	47	37	300 Ω	40	5,3	07
22 kΩ		76	66	54	600 Ω	50	3,5	08
47 kΩ		108	91	76	1 kΩ	50	2,3	09
100 kΩ		152	122	107	2 kΩ	50	1,5	11
220 kΩ		217	166	153	3,5 kΩ	60	0,99	12
470 kΩ		306	216	216	6 kΩ	60	0,85	13
1 MΩ		425	274	300	10 kΩ	70	0,43	14
2,2 MΩ		600	330	420	20 kΩ	70	0,27	15
4,7 MΩ		840 (2)	340	590	50 kΩ	70	0,18	16
1 kΩ	logarithmic	10	8,9	7,1	10 Ω (5)	40	10 (3)	24
2,2 kΩ		14	12,8	10,2	20 Ω	50	6,8	25
4,7 kΩ		20	17,5	14,5	35 Ω	50	4,4	26
10 kΩ		29	24	20	50 Ω	50	2,9	27
22 kΩ		42	34	29	100 Ω	60	1,9	28
47 kΩ		59	47	41	200 Ω	60	1,3	29
100 kΩ		85	63	60	250 Ω	60	0,85	31
220 kΩ		122	87	86	500 Ω	70	0,55	32
470 kΩ		172	112	120	1 kΩ	70	0,37	33
1 MΩ		240	141	170	2 kΩ	80	0,24	34
2,2 MΩ		350	182	244	5 kΩ	80	0,16	35
100 kΩ	special	85	63	60	500 Ω	60	0,85 (4)	38

Notes

1. Measured after 1000 h.
2. Max. 600 V (a.c.).
3. Slider contact between 20 and 100% of R_{ac}. For slider contact positions between 0 and 20% of R_{ac} the values have to be multiplied by 6.
4. Slider contact between 20 and 100% of R_{ac}. For slider contact positions between 0 and 20% of R_{ac} the value has to be multiplied by 2,4.
5. Measured between terminals a and b.

Tolerance on nominal resistance	± 20%
Resistance law and tolerance	see Fig. 3
Maximum permissible dissipation (P_{max})	see Fig. 4
Contact resistance between carbon track and slider contact, the slider being moved 1 mm/s (see also Measurement of the contact resistance)	
linear law	⩽ 3% of R_{ac}
logarithmic law,	
for 0 – 40% of effective travel	⩽ 0,75% of R_{ac}
for 40 – 70% of effective travel	⩽ 2% of R_{ac}
for 70 – 100% of effective travel	⩽ 8% of R_{ac}
special law,	
for 0 – 40% of effective travel	⩽ 1,2% of R_{ac}
for 40 – 60% of effective travel	⩽ 3% of R_{ac}
for 60 – 100% of effective travel	⩽ 6% of R_{ac}
Crackle voltage at maximum slider current of 1 mA, the slider being moved maximum 0,025 mm/s.	
R_{nom} = 100 kΩ, linear law	⩽ 100 mV
R_{nom} = 100 kΩ, special law,	
for 0 – 60% of effective travel	⩽ 100 mV
for 60 – 100% of effective travel	⩽ 150 mV
Change of preset voltage after vibration test (IEC 68, test Fc) and shock test (IEC 68, test Ea)	⩽ 0,1% of total voltage typ. 0,05% of total voltage

Measurement of the contact resistance , CR

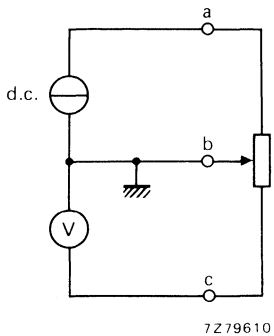

Fig. 2.

A d.c. current source which supplies a constant direct current (I) of e.g. 1 mA, is connected to pins a and b of the potentiometer. The d.c. voltage (V) resulting from the contact resistance (CR) and the d.c. current is measured between pins b and c (V = I.CR).

During the measurement the slider contact is moved with a constant speed of 1 mm/s. The input resistance of the d.c. voltmeter must be at least 10 MΩ.

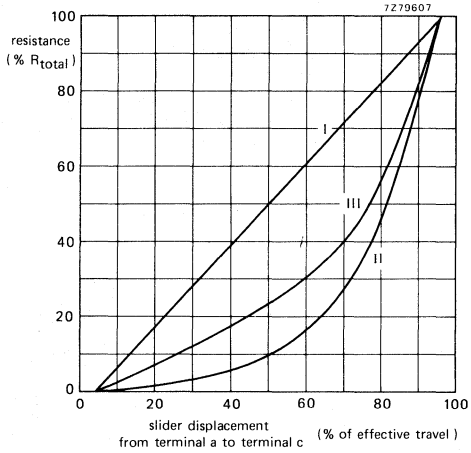

Fig. 3 Resistance as a function of slider displacement. Counter-clockwise knob rotation results in an increase of resistance between a and b (Fig. 1).

curve	resistance law	tolerance on resistance law	
		displacement	resistance
		% of effective travel	% of R_{total}
I	linear	between 36,5 and 38,5 between 61,5 and 63,5	33,5 - 41,5 58,5 - 66,5
II	logarithmic	between 36,5 and 38,5 between 61,5 and 63,5	3,5 - 8,5 12 - 26
III	special	between 36,5 and 38,5 between 61,5 and 63,5 between 86,5 and 88,5	14 - 22 28 - 38 60 - 75

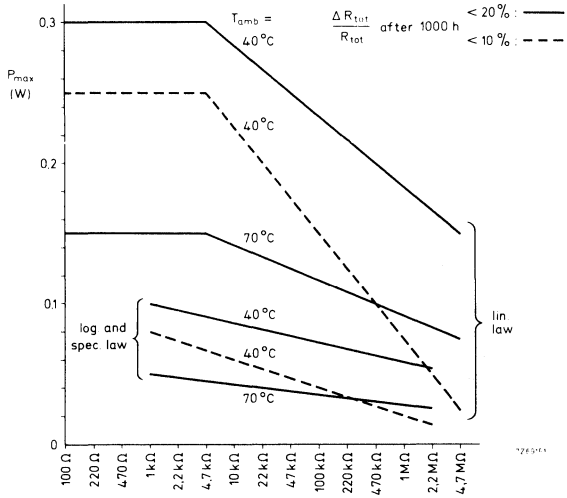

Fig. 4 Maximum permissible power dissipation.

Resistance change as a function of temperature; relative humidity 40 to 80% at 25 °C.

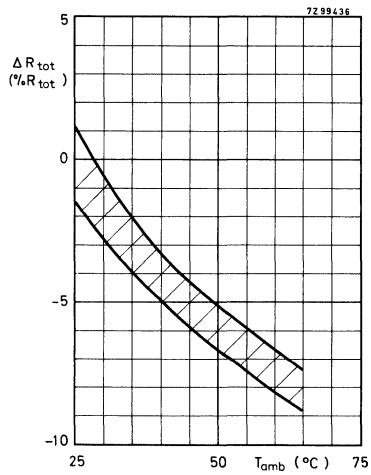

Fig. 5 R_{nom} = 100 kΩ, linear law.

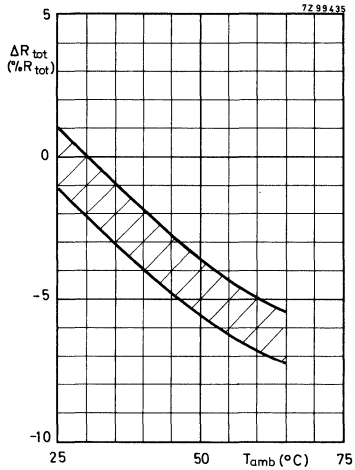

Fig. 6 R_{nom} = 100 kΩ, special law.

Change of preset voltage as a function of temperature, $V_{a\text{-}b}$ being 30% of $V_{a\text{-}c}$; relative humidity 40 to 80% at 25 °C.

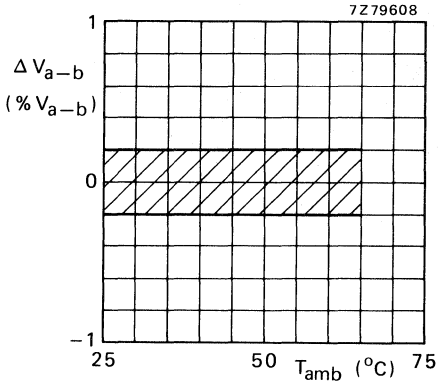

Fig. 7 R_{nom} = 100 kΩ, linear law.

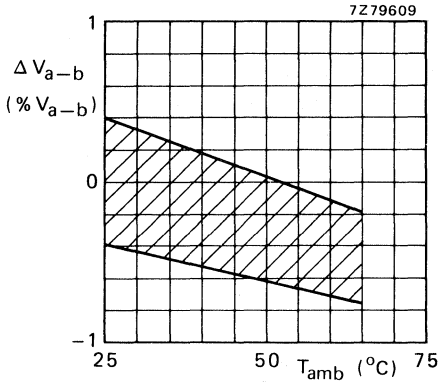

Fig. 8 R_{nom} = 100 kΩ, special law.

MULTI-TURN CARBON PRESET POTENTIOMETERS

with bandswitch

This data should be read in conjunction with that multi-turn carbon preset potentiometers, types CMP10, CMP20, CMP40 (catalogue numbers 2322 413 ....., 2322 412 ..... and 2322 414 .....).

Type CMP/S. is basically identical to CMP ..., however, equipped with a 3-position bandswitch. The switch is designed for band switching in television or radio tuners and is of the "break before make" type. Two switch versions are available: /SK is equipped with a black knob, and /SL has a red lever. Other knobs and levers can be supplied on request.

MECHANICAL DATA

Type /SK, outline drawing

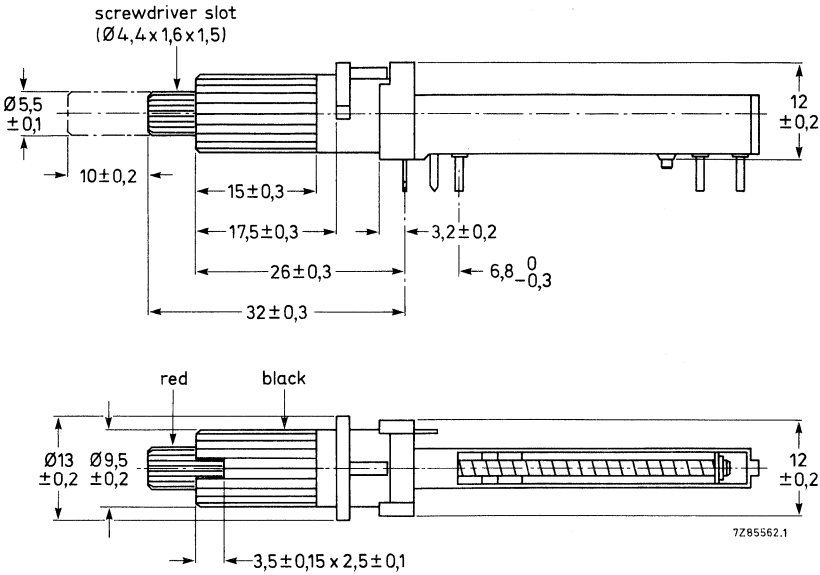

Operating torque		10 to 40 mNm
End stop torque		> 250 mNm
Switching angle		2 x 40 degrees
Climatic category		25/070/21
Life		> 1000 cycles
Shaft load		
radial push	max.	2,5 N
axial pull	max.	5 N
axial push	max.	5 N

Type /SL, outline drawing

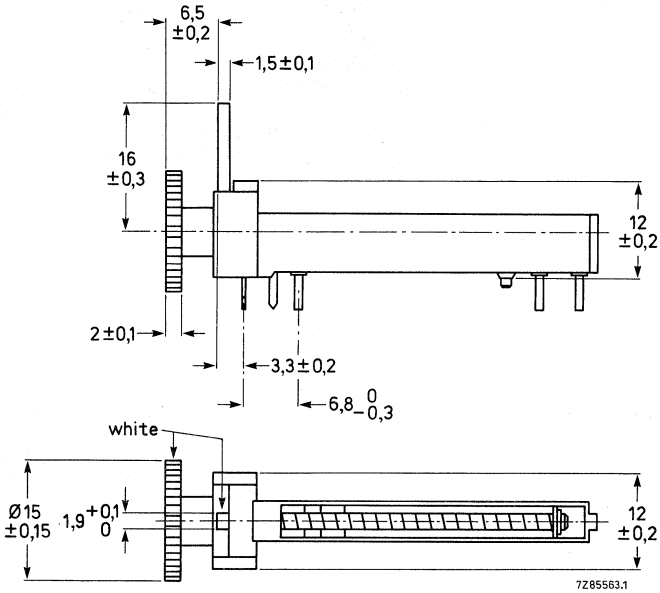

The potentiometers can be mounted on a printed wiring board with a piercing plan according to Fig. 3, viewed from the component side.

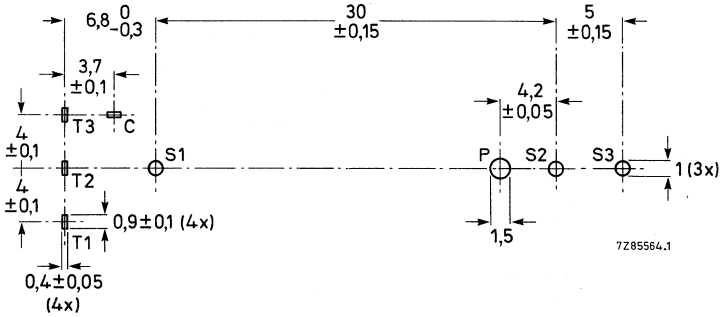

Fig. 3.

ELECTRICAL DATA of the switch

Rating (load applied)	35 V/20 mA
Function	1 section, 3 contacts
Contact resistance, max.	50 mΩ at a 5 mA

Catalogue number will be indicated on request.

MULTI-TURN CARBON PRESET POTENTIOMETERS

long life version

QUICK REFERENCE DATA

Nominal resistance, linear law (E3 series)	2,2 kΩ to 220 kΩ
Number of turns of spindle	
potentiometers CMP10L	10
potentiometers CMP20L	20
potentiometers CMP40L	40
Climatic category (IEC 68)	40/80/21

APPLICATION

The potentiometers are precision potential divider for general purpose. Typical applications are: position sensors and continuous tuning.

DESCRIPTION

A carbon resistor element is rivetted in a thermosetting housing. The electrical connection between the rivetted contacts (a and c) and the resistor element is effected by a silver-filled adhesive. The multi-finger slider is activated by a silvered threaded spindle. The potentiometer will not be damaged if the spindle is turned beyond its extreme position. The potentiometers can be supplied with various adjustments and with or without a scale indicator.

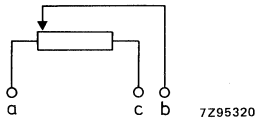

Fig. 1 Designation of terminals; slider in outer c.w. position.

COMPOSITION OF THE CATALOGUE NUMBER

2322 41 . . . . .

code for number of turns of spindle
6 = 20 turns, type CMP20L
7 = 10 turns, type CMP10L
8 = 40 turns, type CMP40L

code for indicator, see Indicators

code for nominal resistance value

05 = 2,2 kΩ	09 = 47 kΩ
06 = 4,7 kΩ	11 = 100 kΩ
07 = 10 kΩ	12 = 220 kΩ
08 = 22 kΩ	Ω

code for adjustment provision, see Adjustment provisions.

MECHANICAL DATA

Dimensions of the housing (mm)

The housing has been drawn without scale indicator and adjustment provision; these parts are described in the relevant paragraph.

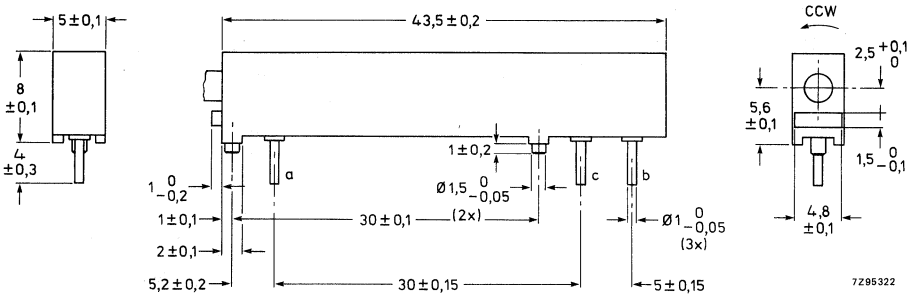

Fig. 2 Terminals a and c are connected to the ends of the carbon track; terminal b is connected to the slider contact.

MOUNTING

The potentiometers are to be mounted on printed circuit boards. Hole pattern is given in Fig. 3.
The terminals may be dip-soldered to a depth of 2 mm max in a solder bath of 260 °C max for 4 s max. When a soldering bit is used, its temperature must not exceed 360 °C for 1,5 s and neither axial nor radial stress must be exerted on the terminals.

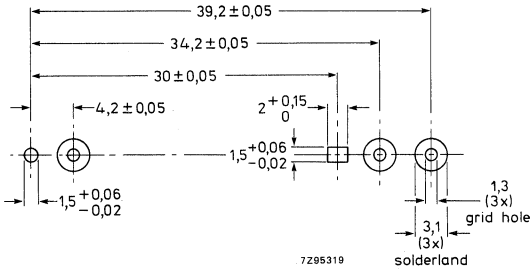

Fig. 3 Hole pattern, viewed from component side.

MARKING

The potentiometers are marked with nominal resistance, resistance law, period and year of manufacture.

TECHNICAL DATA

Unless otherwise stated, all electrical values have been determined at an ambient temperature of 15 to 35 °C, an air pressure of 860 to 1060 hPa and a relative humidity of 45 to 75%.

Resistance law		linear, see also Fig. 4
Independent conformily		± 2%, see also Fig. 5
Nominal resistance range, E3 series		2,2 kΩ to 220 kΩ
Tolerance on the nominal resistance		± 20%
Rated dissipation at 70 °C, P_{nom}		0,125 W, see Fig. 4
Limiting element voltage (d.c.)		100 V
Insulation voltage (d.c. or a.c. peak)		150 V
Temperature coefficient, 20 to −40 °C		⩽ ± 500 10^{-6}/K
Temperature coefficient, 20 to 85 °C		⩽ ± 300 10^{-6}/K
Terminal resistance		⩽ 2% of R_{ac}
Limiting slider current		0,1 mA
Climatic category, IEC 68		40/085/21
Starting torque		1,5 to 10 mNm
Electrical endurance 1000 h at 70 °C, cyclic)	$\frac{\Delta R_{ac}}{R_{ac}}$	⩽ ± 10%
Bump	$\frac{\Delta R_{ac}}{R_{ac}}$	⩽ 2%
Vibration	$\frac{\Delta R_{ac}}{R_{ac}}$	⩽ 2%
	$\frac{\Delta V_{ab}}{V_{ac}}$	⩽ 0,1%
Mechanical life, 10 000 cycles	$\frac{\Delta R_{ac}}{R_{ac}}$	⩽ 5%

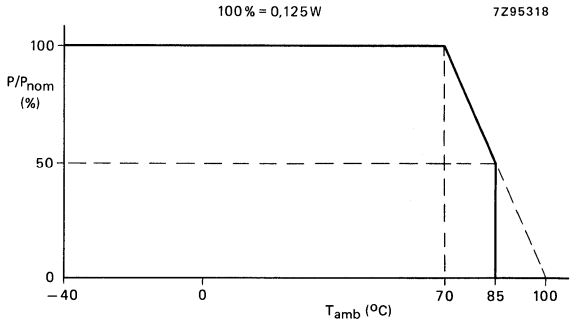

Fig. 4 Dissipation as a function of ambient temperature.

Mechanical and electrical travel

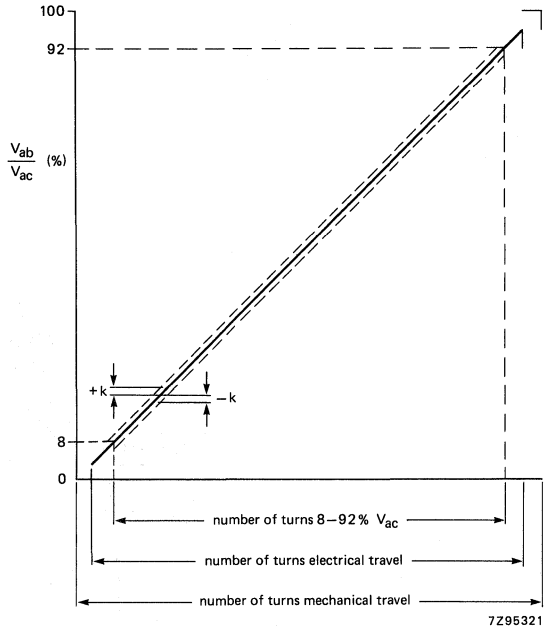

Fig. 5 Linear resistance law, K = independent conformity.

Number of turns

type	mechanical travel	electrical travel	8 to 92%
CMP10L	9,5 ± 0,5	9 ± 0,5	7,59 ± 0,4
CMP20L	19,5 ± 0,5	18 ± 0,5	15,18 ± 0,4
CMP40L	39 ± 1	36 ± 1	30,36 ± 0,8

Indicators

type	colour	code in catalogue number 2322 41 . . . . . ↓
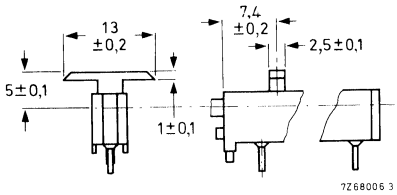	red	1
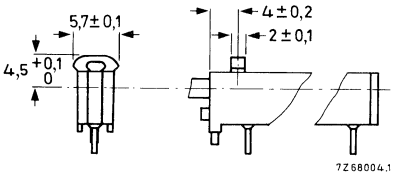	red	3
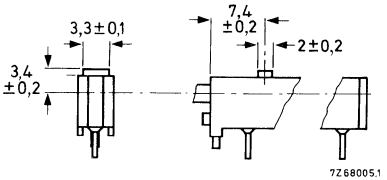	yellow	4
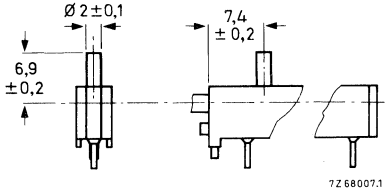	red	5
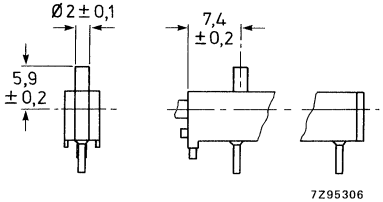	red	7

type	colour	code in catalogue number 2322 41 . . . . .
without indicator		0
without indicator, with black dust cover on the housing 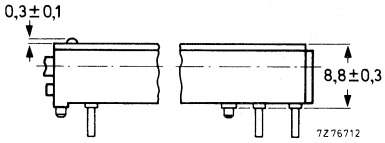		8

Adjustment provisions

type	colour	code in catalogue number 2322 41 . . . . .
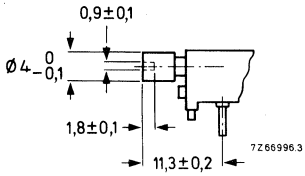	grey	51
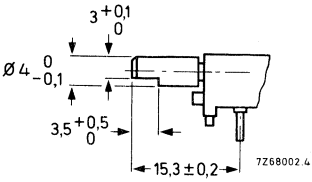	grey	52
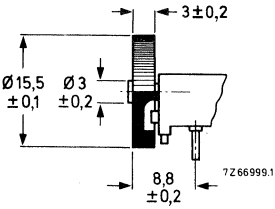 Knob: approx. 60 notches	red	61

type	colour	code in catalogue number 2322 41 . . . . .
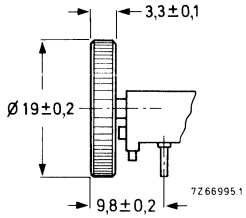 Knob: approx. 48 notches	black	62
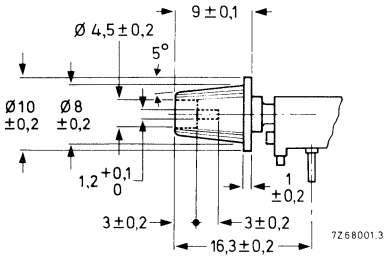	black	63
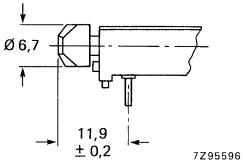	black	83
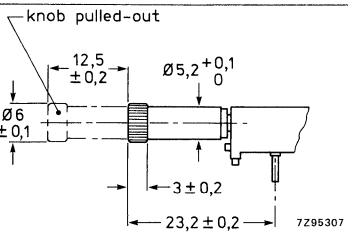 Knob with trimming slot 4,4 x 1,6	black	71
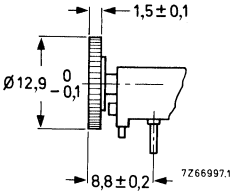 number of teeth = 24 tooth height = 1,2	white	82

TESTS AND REQUIREMENTS

Clause numbers of tests and conditions of test refer to IEC 393-1 (potentiometers, part 1: terms and methods of test).

The potentiometers have been tested whilst mounted by their terminations on a printed wiring board.

When drying is called for procedure I of IEC 393-1, sub. 5.5. is used (24 ± 4 h, 55 ± 2 °C, R.H. 20%).

When the contact resistance variation (CRV) is measured, the wiper is rotated in both directions over 90% of the effective resistance for a total of 6 cycles. The maximum deviations in the last 3 cycles are taken into account. Wiper speed: 2 cycles/minute; bandwidth 10 Hz to 5 kHz.

IEC 393-1 clause	IEC 68-2 test method	test	procedure	typical result
6.22.3	T	Solderability	solder bath: 230 ± 10 °C	good tinning
6.22.4	Tb	Resistance to heat	solder bath: 350 ± 10 °C 3,5 ± 0,5 s	$\frac{\Delta R_{ac}}{R_{ac}} \leqslant 0{,}5\%$
6.25	Eb	Bump	acceleration: 390 m/s² number of bumps: 4000	$\frac{\Delta R_{ac}}{R_{ac}} \leqslant 2\%$
6.24	Fc	Vibration	frequency: 10-500 Hz amplitude: 0,75 mm or 98 m/s², 6 h	$\frac{\Delta R_{ac}}{R_{ac}} \leqslant 2\%$ $\frac{\Delta V_{ab}}{V_{ac}} \leqslant 0{,}1\%$
6.13		Temperature characteristic of resistance	−40 °C to 20 °C 20 °C to 70 °C 20 °C to 85 °C	$500 \cdot 10^{-6}$/K $300 \cdot 10^{-6}$/K $300 \cdot 10^{-6}$/K
6.26	–	Climatic sequence		
6.26.2	Ba	Dry heat	16 h at 85 °C	$\frac{\Delta R_{ac}}{R_{ac}} \leqslant 5\%$
6.26.3	D	Damp heat, accel. 1st cycle	24 h at 55 °C 95-100% R.H.	
6.26.4	Aa	Cold	2 h at −40 °C	
6.26.6	D	Damp heat remaining cycle	24 h at 55 °C 95-100% R.H.	
(6.30)	–	Electrical endurance	T_{amb}: 70 °C, 1000 h cycle (1,5 h on and 0,5 h off, b at 0,67 a-c) Load: 0,05 W between a and c	CRV < 2% of R_{ac} $\frac{\Delta R_{ac}}{R_{ac}} \leqslant 5\%$ $\frac{\Delta V_{ab}}{V_{ac}} \leqslant 0{,}1\%$
6.29	–	Mechanical endurance	10 000 cycles, 4 cycles/min no load	$\frac{\Delta R_{ac}}{R_{ac}} \leqslant 5\%$

IEC 393-1 clause	IEC 68-2 test method	test	procedure	typical resul
(6.27)	C	Damp heat steady state	b at 0,67 a-c *no load;* 21 days; recovery 24 h, 22 ± 1 °C, 50% R.H. ± 5%	CRV < 1,0% of R_{ac} $\frac{\Delta R_{ac}}{R_{ac}} \leqslant 5\%$ $\frac{\Delta R_{ab}}{R_{ab}} \leqslant 5\%$ $\frac{\Delta V_{ab}}{V_{ac}} \leqslant 0{,}1\%$
(6.27)	C	Damp heat steady state	*with load* between a and c, 10 days; recovery 24 h, 22 °C ± 1 °C, 50% R.H. ± 5%	$\frac{\Delta R_{ac}}{R_{ac}} \leqslant 10\%$

FOCUS POTENTIOMETERS

FOCUS POTENTIOMETER UNITS

- For colour picture tubes, focusing voltage approx. 4,5 kV and 7 kV
- In conjunction with triplers or diode-split line output transformers

QUICK REFERENCE DATA

Nominal resistance	24 MΩ ± 20% and 83 MΩ ± 15%*
Maximum dissipation at 70 °C	3,8 W
Climatic category, IEC 68	20/070/21

APPLICATION

These focus potentiometer units are for adjustment of the focusing voltage for colour picture tubes.

DESCRIPTION

The units comprise three resistive elements which are connected in series, see Fig. 1. The centre element is a potentiometer. The resistive elements are of the thick-film, metal glaze type; they are printed on an Al_2O_3 substrate. The housing of the units is self-extinguishing, glass-fibre filled thermoplastic material. The units have two snap-in clasps for board mounting.
The electrical connections are solder tags or faston receptables of 2,8 x 0,5 mm or 4,8 x 0,5 mm. The focus units can be used with or without a bleeder resistor.
For a stable focus output voltage the types 2322 460 90028 and 2322 460 90029 are provided with an extra input terminal d.

Fig. 1.

a = focus output voltage or tripler unit;
b = focusing voltage;
c = earth.

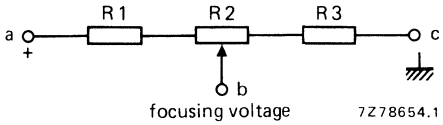

* Other values on request.

MECHANICAL DATA

Outlines

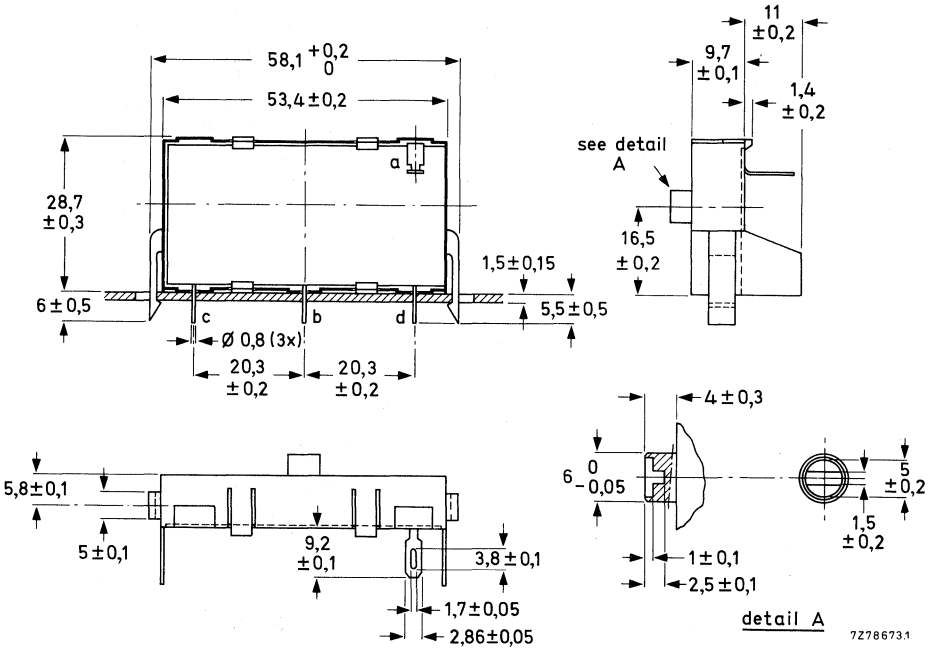

Fig. 2 Potentiometer unit **2322 460 90016**. The indication of the terminals corresponds to those shown in Fig. 1; terminal d serves for mechanical fitting of the unit. Solder tag a fits Faston receptacles (2,8 x 0,5).

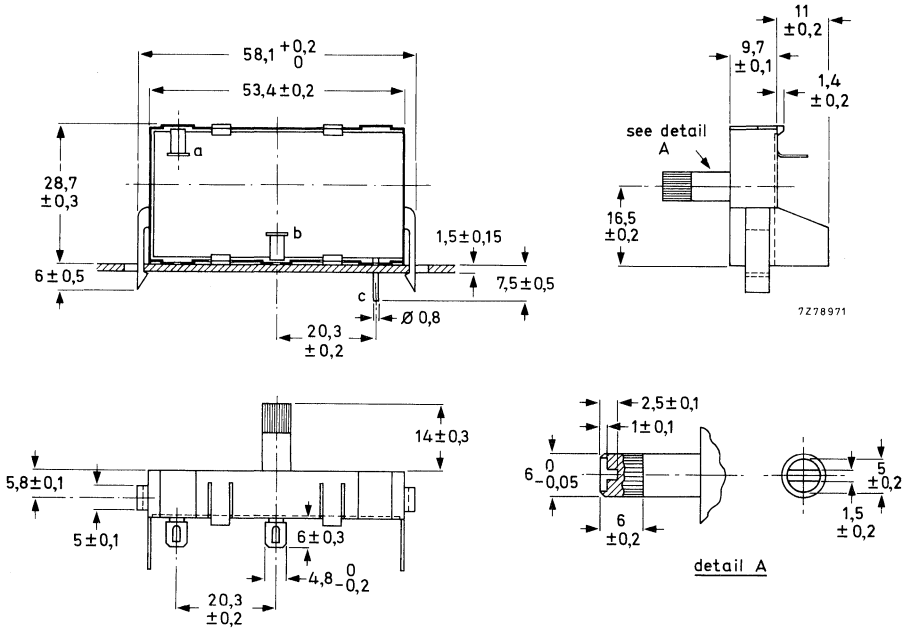

Fig. 3 Potentiometer unit **2322 460 90022**. The indication of the terminals corresponds to those shown in Fig. 1. The solder tags fit on Faston receptacles (4,8 x 0,5).

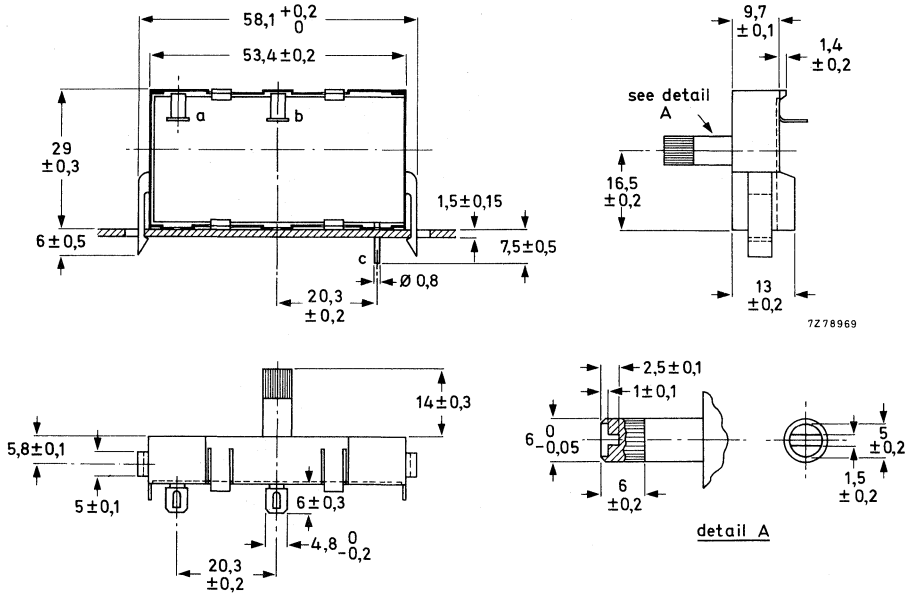

Fig. 4 Potentiometer unit **2322 460 90027**. The indication of the terminals corresponds to those shown in Fig. 1. The solder tags fit on Faston receptacles (4,8 x 0,5).

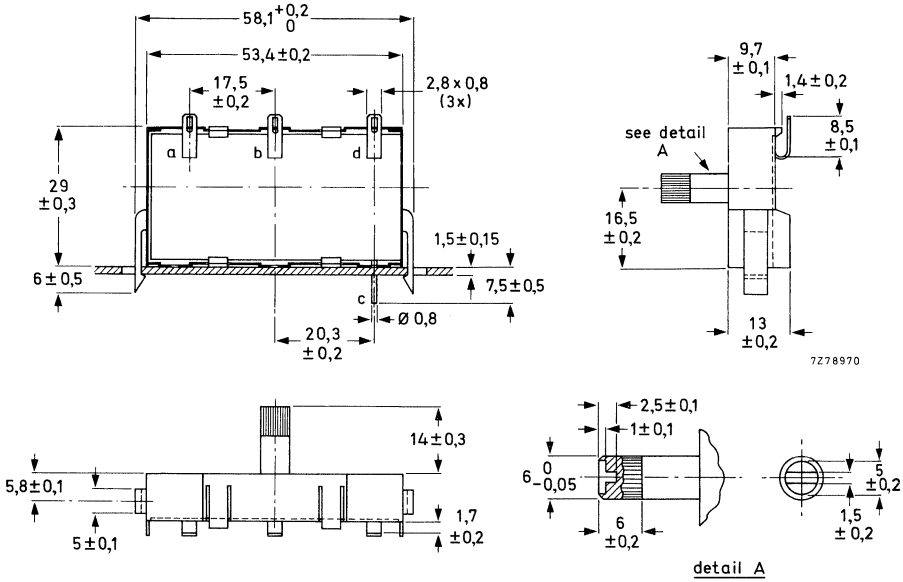

Fig. 5 Potentiometer unit **2322 460 90028**. The indication of the terminals corresponds to those shown in Fig. 6. The solder tags fit on Faston receptacles (2,8 x 0,8).

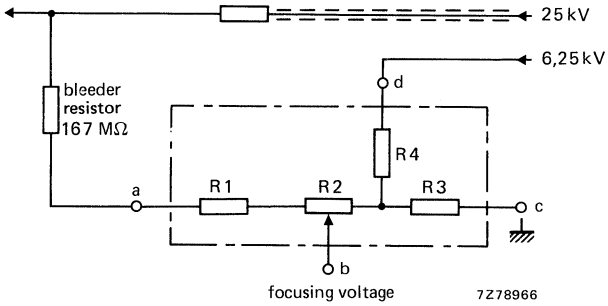

Fig. 6 Diagram of potentiometer unit **2322 460 90028**.

a = e.h.t. voltage via bleeder resistor;

b = focusing voltage;

c = earth;

d = 6,25 kV connection.

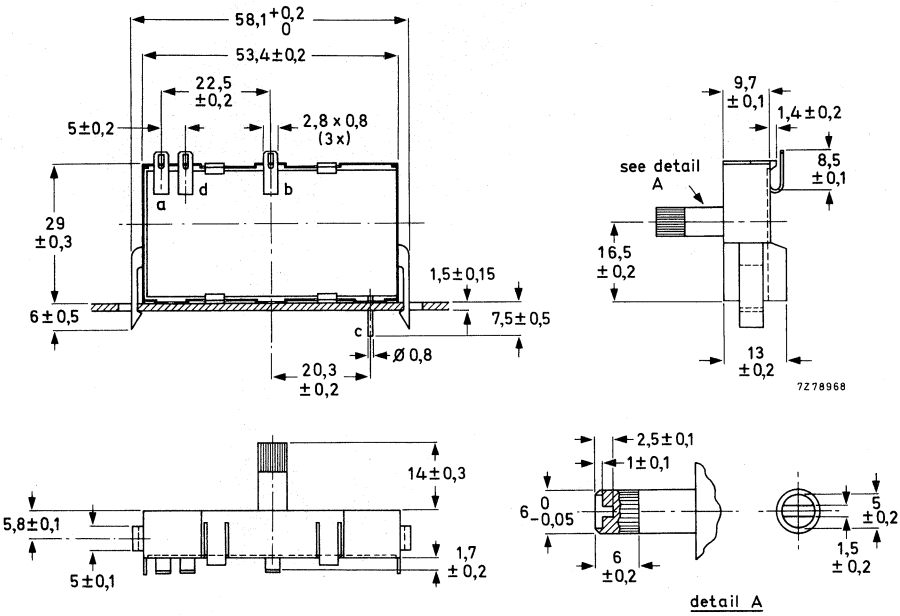

Fig. 7 Potentiometer unit **2322 460 90029**. The indication of the terminals corresponds to those shown in Fig. 8. The solder tags fit on Faston receptacles (2,8 x 0,8).

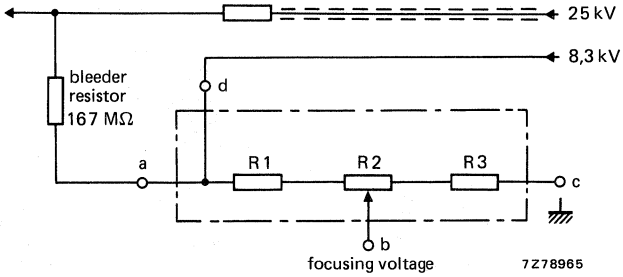

Fig. 8 Diagram of potentiometer unit **2322 460 90029.**

a = e.h.t. voltage via bleeder resistor;

b = focusing voltage;

c = earth;

d = 8,3 kV connection.

TECHNICAL DATA

	2322 460 900 . .					
	16	22	27	28	29	
Nominal resistance value (R1 + R2 + R3, Figs 1, 6 and 8)	24	24	24	83	83	MΩ
Tolerance on nominal resistance	± 20	± 10	± 10	± 15	± 15	%
Resistance ratio at 25 °C (focusing voltage range)						
$\frac{R3 + R2}{R_{tot}}$	⩾ 0,73	⩾ 0,73	⩾ 0,94	⩾ 0,94	0,94	
$\frac{R3}{R_{tot}}$	⩽ 0,50	⩽ 0,50	⩽ 0,75	⩽ 0,75	⩽ 0,75	
Variation in resistance ratios at 70 °C	⩽ 3	⩽ 3	⩽ 3	⩽ 3	⩽ 3	%
Resistance law of R2	lin.	lin.	lin.	lin.	lin.	
Contact resistance	⩽ 250	⩽ 250	⩽ 350	⩽ 750	⩽ 750	kΩ
Maximum dissipation at 70 °C	3,8	3,8	3,8	3,8	3,8	W
Limiting element voltage	8,5	8,5	9	10	10	kV
Insulation resistance between interconnected terminals and mounting base at 500 V (d.c.)			$> 10^3$			MΩ
Test voltage between interconnected terminals and mounting base for 1 min			10			kV
Operation temperature range			−20 to + 70			°C
Climatic category, IEC 68			20/070/21			
Operating torque			3,5 to 30			mNm
Permissible end stop torque			⩽ 80			mNm
Permissible axial spindle load			12			N

Note

Potentiometer units with different resistance values and resistance ratios, connecting terminals and spindles are available on request.

MOUNTING

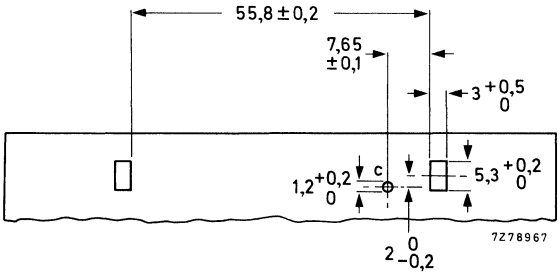

Fig. 9.

Piercing diagram for board mounting (component side).

MARKING

The potentiometer units are marked with last five digits of the catalogue number, and period and year of manufacture.

TESTS AND REQUIREMENTS

IEC 393-1 clause	IEC 68-2 test method	test	procedure	typical results
6.30	–	Electrical endurance	T_{amb} = 70 °C; 1000 h load: 9,5 kV (d.c.) at 80 ± 5% of V_{ac}	$\frac{\Delta R_{ac}}{R_{ac}} \leqslant 3\%$ $\frac{\Delta V_{bc}}{V_{bc}} \leqslant 0{,}3\%$
6.27	Ca	Damp heat steady state	b at 0,80 V_{ac} no load, 21 days, T_{amb} = 40 °C, 93% R.H.	$\frac{\Delta R_{ac}}{R_{ac}} \leqslant 0{,}5\%$
6.24	Fc	Vibration	frequency 50 Hz, amplitude 1 mm, 3 directions, 2 h per direction	$\frac{\Delta V_{bc}}{V_{bc}} \leqslant 0{,}1\%$
6.29	–	Mechanical endurance	50 cycles, 10 cycles/min no load	$\frac{\Delta R_{ac}}{R_{ac}} \leqslant 3\%$
9	–	Insulation resistance	500 V (d.c.)	min. 10^3 MΩ
–	Ta	Soldering	Solder bath, non-activated colophony flux, solder temp. 235 °C, dwell time 2 s.	good tinning

FOCUS POTENTIOMETERS

with conductive rubber connections

- For hi-bi and lo-bi colour picture tubes, focus voltage range 3,9 to 9,3 kV
- Simple mounting and connection by conductive rubber

QUICK REFERENCE DATA

Nominal resistance	24 to 50 MΩ
Maximum dissipation	3 W
Climatic category, IEC 68	20/70/21

DESCRIPTION

The units comprise three resistance elements which are connected in series, see Fig. 1. The centre element is a potentiometer. The resistance elements are of the thick-film, metal glaze type; they are printed on an Al_2O_3 substrate. The housing of the units is of self-extinguishing, glass-fibre filled thermoplastic material. The units have two snap-in clasps for p.c. board mounting. Electrical connections are by means of conductive rubber.

For direct connections to the p.c. board, appropriate pins, mounted on the p.c. board, are plugged into the conductive rubber pads when mounting the unit. For wire connections, stripped wires, fitted in wire carriers, are plugged in the relevant channels in the housing, thus piercing into conductive rubber pads.

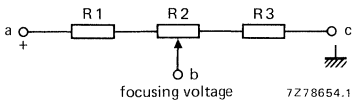

Fig. 1 Diagram of potentiometer unit.
a = focus input voltage of e.h.t. device
b = focusing voltage;
c = earth.

MECHANICAL DATA

Outlines (see Fig. 2)		
Mechanical angle of rotation		252 ± 5°
Operating torque		3,5 to 30 mNm
Torque against end stop	⩽	800 mNm
Permissible axial spindle load	⩽	120 N
Pull-out force of wires		t.b.f.
Push-in force of wires		t.b.f.
Inflammability		according to IEC 50 c
Climatic category, IEC 68		20/70/21

Outlines

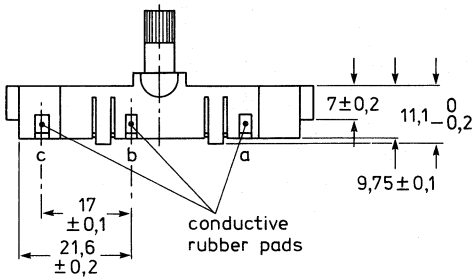

Holes b and c are designed for pre-mounted contact pins, dia. 1 mm x 6 mm, cat. number 3122 121 63560.

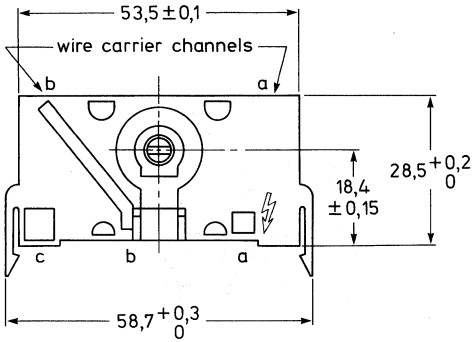

a, b and c are conductive rubber pads.

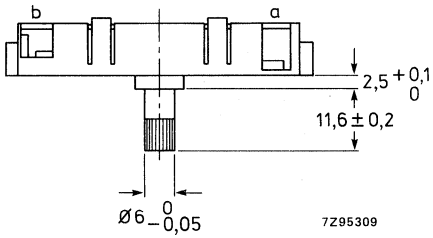

Channel a is designed for mounting wire carrier 4322 052 88750 for wire, dia. 1,8 ± 0,2 mm, stripped over a length of 7 ± 0,5 mm.

Channel b is designed for mounting wire carrier 4322 052 88730 for wire, dia. 1,8 ± 0,06 mm, stripped over a length of 6 ± 0,5 mm.

The wire carriers must be ordered extra.

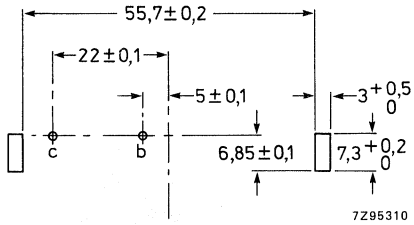

Piercing diagram. Position of oblong mounting holes for snap-in clasps and of the contact pins b and c.

Fig. 2.

ELECTRICAL DATA

Nominal resistance (R_{nom})		See table below
Tolerance on R_{nom}		±10 %
Resistance ratio at 25 °C		
$\frac{R2+R3}{R_{ac}}$		See table below
$\frac{R_s}{R_{ac}}$		See table below
Variation in resistance ratio at 70 °C	⩽	1 %
Resistance law of R2		linear
Contact resistance	⩽	2% of R_{nom}
Maximum dissipation at 70 °C		3 W
Limiting element voltage		10 kV
Insulation resistance between interconnected terminals and mounting base at 500 V (d.c.)	⩾	10^3 MΩ
Test voltage between interconnected terminals and mounting base for 1 minute (d.c.)		10 kV

MARKING

The units are marked 460 followed by the last five digits of the cat. no., source code and date code (year + month of manufacture).

AVAILABLE TYPES

catalogue number	R_{ac} MΩ	e.h.t. voltage kV	focus voltage kV	$\frac{R2+R3}{R_{ac}}$ %	$\frac{R3}{R_{ac}}$ %
2322 460 90105	28	7,3	5,2 to 7,3	>71	–
2322 460 90106	24	8,5	3,9 to 6,4	>75	<46
2322 460 90107	24	8,5	6,0 to 8,0	>93	<70
2322 460 90108	40	8,5	4,2 to 6,2	>73	<50
2322 460 90111	50	9,5	6,7 to 8,8	>93	<70
2322 460 90115	50	9,5	4,4 to 7,1	>75	<46
2322 460 90119	24	8,5	3,9 to 6,4	>75	<46
2322 460 90122	40	8,5	4,2 to 6,2	>73	<50
2322 460 90123	50	9,5	6,7 to 8,8	>93	<70
2322 460 90124	50	9,5	4,4 to 7,1	>75	<46
2322 460 90127	33	9,5	7,4 to 9,3	>98	<78

TESTS AND REQUIREMENTS

IEC 393-1 clause	IEC 68-2 test method	test	procedure	typical results
6.30	–	Electrical endurance	T_{amb} = 70 °C; 1000 h load: 9,5 kV (d.c.) at 80 ± 5% of V_{ac}	$\frac{\Delta R_{ac}}{R_{ac}} \leqslant 3\%$ $\frac{\Delta V_{bc}}{V_{bc}} \leqslant 0{,}3\%$
6.27	Ca	Damp heat steady state	b at 0,80 V_{ac} no load, 21 days, T_{amb} = 40 °C, 93% R.H.	$\frac{\Delta R_{ac}}{R_{ac}} \leqslant 0{,}5\%$
6.24	Fc	Vibration	frequency 50 Hz, amplitude 1 mm, 3 directions, 2h per direction	$\frac{\Delta V_{bc}}{V_{bc}} \leqslant 0{,}1\%$
6.29	–	Mechanical endurance	50 cycles, 10 cycles/min no load	$\frac{\Delta R_{ac}}{R_{ac}} \leqslant 3\%$
9	–	Insulation resistance	500 V (d.c.)	min. 10^3 MΩ

MINIATURE DST FOCUS POTENTIOMETER

This unit has been specially developed for mounting on a diode-split transformer (DST) and for adjustment of the focus and screen grid voltage (V_{g2}) in colour television receivers and colour monitors.

DESCRIPTION

This unit comprises seven resistance elements, the second and fourth elements are potentiometers. The thick-film metal glaze resistance elements are on a ceramic substrate (Al_2O_3).

The synthetic case is polycarbonate, reinforced with glass-fibre and is self-extinguishing (UL94-VO). The unit is suitable for DST mounting. The mechanical mounting is done by sliding the unit in a conical slit. The electrical connection of the high-tension input voltage is made by means of a conductive rubber contact. Electrical connection of focus and V_{g2} are done in a very simple way by pressing stripped wires into the b1 and b2 connecting holes respectively. Suggested wires should have a diameter of 3 mm max., copper diameter 0,8 mm and stripped over 5 + 1 mm (focus) and 4 + 1 mm (V_{g2}) respectively. Earth connection is effected through the printed wiring board.

CATALOGUE NUMBER

2322 460 90311

MECHANICAL DATA

Outlines

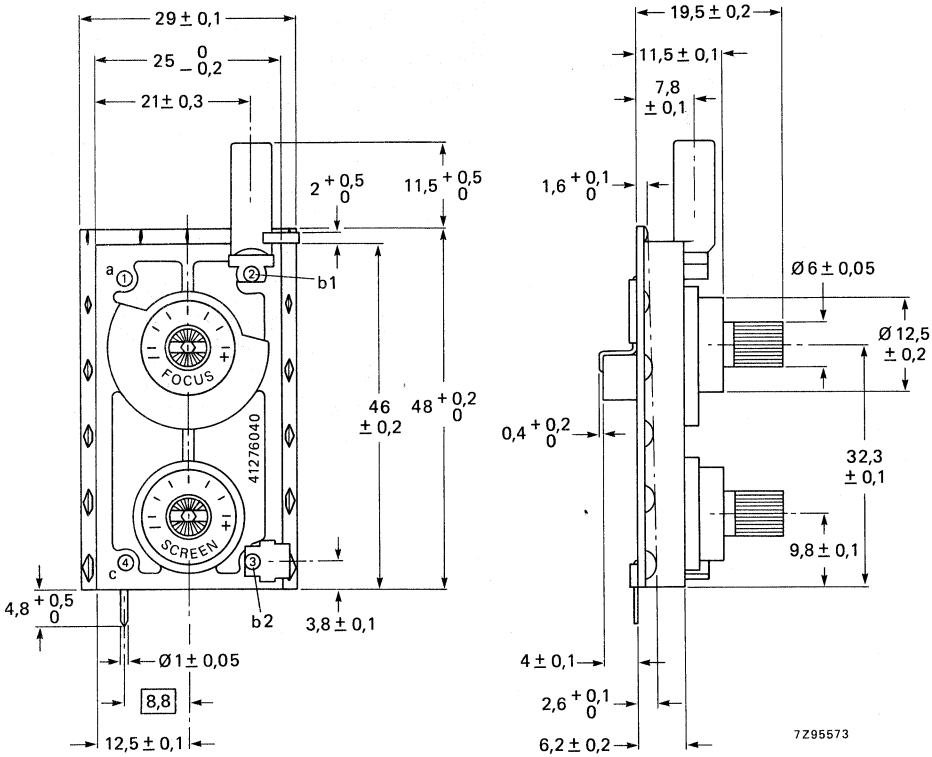

Fig. 1 a = high tension; b1 = focus; b2 = V_{g2}; c = earth.

Mechanical angle of rotation			
focus		175 ° ± 5	%
V_{g2}		200 ° ± 5	%
Operating torque		3 to 15	mNm
Initial torque	⩽	30	mNm
Maximum end stop torque	⩽	300	mNm
Maximum force on spindle		50	N
Insertion force of wire connections b1 and b2	⩽	25	N
Extraction force of wire connections b1 and b2	⩾	50	N
Inflammability			
self-extinguishing according to UL94-VO			

ELECTRICAL DATA

Electrical circuit:

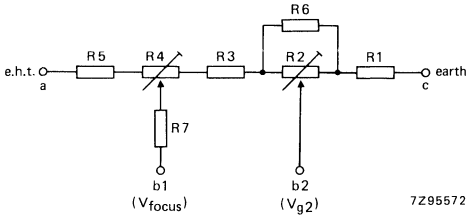

Fig. 2.

Total resistance and tolerance R_{ac}		70 MΩ ± 10%
Resistance of R7		15 MΩ ± 20%
Maximum permissible operating voltage V_{ac}		9,1 kV
Maximum dissipation at T_{amb} = 70 °C		1,2 W
Settability, acc. to IEC 393/6.34		
focus	±	25 V
V_{g2}	±	5 V
Contact resistance	<	2% of R_{ac}

Breakdown voltage at under-pressure in accordance with IEC 68-2-13, test M: 9,1 kV (d.c.) for 30 minutes on a; b1 and b2 set to maximum voltage and not connected, c earthed. At 55 °C and 655 hPa: neither flashovers nor breakdowns must occur.
Breakdown voltage in humidity in accordance with IEC 68-1:
9,1 kV (d.c.) for 30 minutes on a; b1 and b2 set to maximum voltage and not connected, c earthed. At 55 °C, 90% R.H. and 1013 hPa: neither flashovers nor breakdowns must occur.

Resistance ratio at 23 °C:
version

$\frac{R1}{R_{ac}}$	0,7 to 2,2 %
$\frac{R1 + R2}{R_{ac}}$	8,8 to 13,8 %
$\frac{R1 + R2 + R3}{R_{ac}}$	55 to 65 %
$\frac{R1 + R2 + R3 + R4}{R_{ac}}$	95 to 97,5 %

Climatic category 20/70/21

MARKING

The units are marked with the last eight digits of the catalogue number, source code and period and year of manufacture.

TESTS AND REQUIREMENTS

IEC 68-2 test method	name of test	procedure (quick reference)	requirements
Na	Rapid change of temperature	5 cycles of ½ h at −25 °C and ½ h at + 80 °C	$\frac{\Delta R_{ac}}{R_{ac}} \leqslant 1\%$
Fc	Vibration	10 to 55 Hz; 0,35 mm in 3 directions, ½ h per direction	$\frac{\Delta V_{focus}}{V_{focus}} \leqslant 0{,}25\%$
Ba	Dry heat	16 h at + 70 °C, no voltage applied. Reconditioning 2 h.	No damage: R_{ac} and resistance ratios shall be within tolerance limits.
Ab	Cold	96 h at −25 °C; no voltage applied; 2 h reconditioning.	
—	Rotational life	50 cycles at a rate of 10 cycles/min, no voltage applied.	$\frac{\Delta R_{ac}}{R_{ac}} \leqslant 3\%$
—	Endurance	1000 h at 70 °C, focus voltage 80 V ± 5% V_{g2} voltage 7 V ± 3%	$\frac{\Delta R_{ac}}{R_{ac}} \leqslant 3\%$, $\Delta V_{b1c} \leqslant 25V$ $\Delta V_{b2c} \leqslant 5V$
Ca	Humidity	21 days at 40 °C, R.H. 95%; no load applied	$\frac{\Delta V_{focus}}{V_{focus}} \leqslant 25$ V
—	Resistance ratios	4 h at 70 °C, 9 kV (d.c.) applied; slider adjusted to 7 kV with respect to earth at 25 °C.	variation of resistance ratios ⩽ 3%

POTENTIOMETER UNIT

- This unit has been specially developed for adjustment of the focus and screengrid voltage (V_{g2}) in television receivers and colour monitors.

DESCRIPTION

The unit is an E.H.T. bleeder resistor comprising five resistance elements, the second and fourth element are potentiometers. The thick-film metalglaze resistance elements are on a ceramic substrate (Al_2O_3).
The synthetic case is reinforced with glass-fibre and is self-extinghuishing (UL94-VO). The unit is suitable for mounting on printed-wiring boards by four snap-locks, integrated on the case.
Connections to the printed-wiring board (earth and V_{g2}), are via special pins, premounted on the board, which pierce into the conductive rubber plugs during mounting of the unit.
For E.H.T. and focus voltage connections, stripped leads are fitted into wire carriers, which are inserted into special channels in the case to pierce into conductive rubber plugs.

CATALOGUE NUMBERS

2322 460 90301	for super hi-bi picture tubes
2322 460 90302	for hi-bi picture tubes
2322 460 90303	for lo-bi picture tubes

MECHANICAL DATA

Outlines

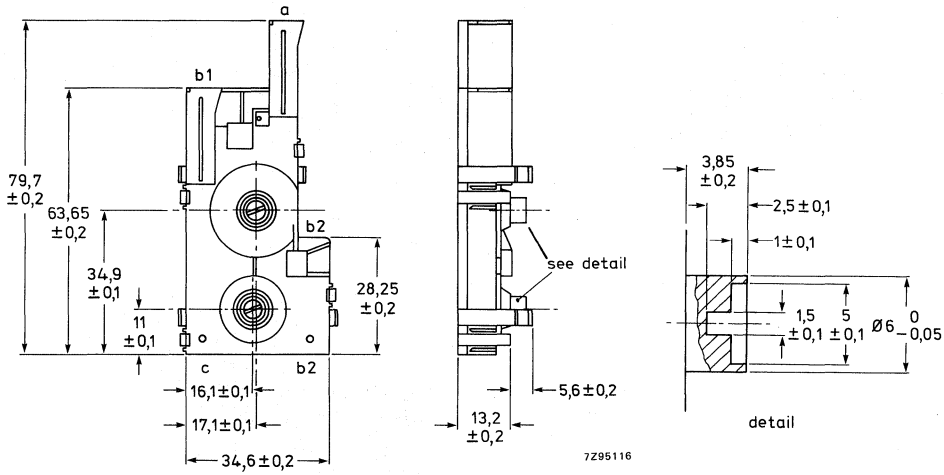

Fig. 1 a = high tension; b1 = focus; b2 = V_{g2}; c = earth. a, b1 and b2 are designed for wire carriers 4322 052 89140 or 88820 with wire ϕ 3,2 ± 0,2 mm and ϕ 1,8 ± 0,1 mm respectively. Wire carriers have to be ordered separately. Strip length for wires: 7 ± 0,5 mm. c and b2 are designed for pre-mounted contact pins ϕ 1 mm x 6 mm.

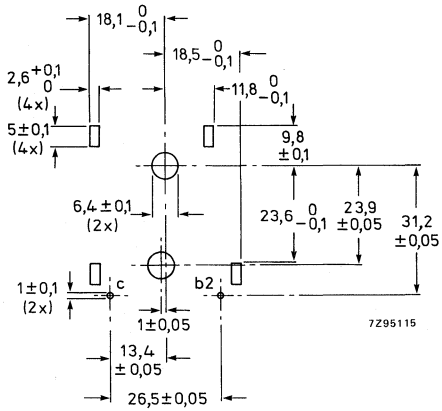

Fig. 2 Hole pattern, viewed from copper side.

Note
No electrically conductive tracks or parts are allowed in the mounting area.

Mechanical angle of rotation		
focus	180° ± 5°	
V_{g2}	222° ± 5°	
Operating torque	3 to 15	mNm
Maximum end stop torque	400	mNm
Maximum axial force	50	N
Extraction force for unit	> 30	N
Insertion force for unit	< 20	N

Inflammability
potentiometers, according to IEC 695-2--2
housing, according to IEC 65-14--4 and UL94-VO

ELECTRICAL DATA

Electrical circuit:

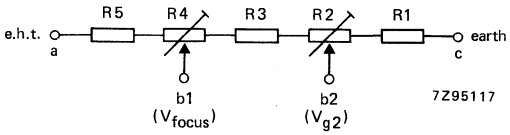

Fig. 3

versions	2322 500			
	90301	90302	90303	
Total resistance and tolerance R_{ac}	100	50	50	MΩ ± 10%
Operating voltage, d.c.	15	8,3	8,3	kV
Test voltage, d.c.	16	10	10	kV
Maximum dissipation at T_{amb} = 70 °C	2,5	1,8	1,8	W
Settability, acc. to IEC 393/6.34				
focus		± 25		V
V_{g2}		± 2,5		V
Contact resistance		< 2% of R_{ac}		

Breakdown voltage at under pressure in accordance with IEC 68-2-13:
16 (resp. 10) kV (d.c.) for 1 minute on a; b1 and b2 set to maximum voltage and not connected, c earthed. At 45 °C and 464 hPa: neither flashovers nor breakdowns must occur.

Breakdown voltage in humidity in accordance with IEC 68-1:
16 (resp. 10) kV (d.c.) for 1 minute on a; b1 and b2 set to maximum voltage and not connected, c earthed. At 45 °C, 90% R.H. and 1013 hPa: neither flashovers nor breakdowns must occur.

Resistance ratio at 23 °C: version	version 2322 500 90301	2322 500 .... 2322 500 90302	2322 500 90303
$\frac{R1}{R_{ac}}$	> 0,5% < 2 %	> 0,5% < 3 %	> 0,5% < 3 %
$\frac{R1 + R2}{R_{ac}}$	> 6 % < 9 %	> 13 % < 18 %	> 13 % < 18 %
$\frac{R1 + R2 + R3}{R_{ac}}$	> 41 % < 49 %	> 62 % < 70 %	> 40 % < 46 %
$\frac{R1 + R2 + R3 + R4}{R_{ac}}$	> 60 % < 70 %	> 93 % < 99 %	> 75 % < 81 %
Climatic category		20/70/21	

MARKING

The units are marked with the last eight digits of the catalogue number, source code and period and year of manufacture.

TESTS AND REQUIREMENTS

IEC 68-2 test method	name of test	procedure (quick reference)	requirements
Na	Rapid change of temperature	5 cycles of ½ h at − 20 °C and ½ h at + 70 °C	No damage: R_{ac} and resistance ratios shall be within tolerance limits.
Fc	Vibration	50 Hz, 1 mm, 3 directions, 2 h per direction.	
Ba	Dry heat	16 h at + 70 °C, no voltage applied. Reconditioning 2 h.	
Aa	Cold	16 h at − 20 °C; no voltage applied; 2 h reconditioning.	
–	Rotational life	50 cycles at a rate of 10 cycles/min, no voltage applied.	$\frac{\Delta R_{ac}}{R_{ac}} \leqslant 3\%$
–	Endurance	1000 h at 70 °C, focus voltage 57 V ± 5% V_{g2} voltage 4 V ± 3%	$\frac{\Delta R_{ac}}{R_{ac}} \leqslant 3\%$, $\Delta V_{b1c} \leqslant 25V$ $\Delta V_{b2c} \leqslant 2{,}5V$
Ca	Humidity	21 days at 40 °C, R.H. 93%; no load applied	$\frac{\Delta R_{ac}}{R_{ac}} \leqslant 0{,}5\%$
–	Resistance ratios	4 h at 70 °C, 9 kV (d.c.) applied; slider adjusted to 7 kV with respect to earth at 25 °C.	variation of resistance ratios ⩽ 3%

ENCODER

MANUAL PULSE GENERATOR

APPLICATION

A manually operated pulse generator which produces two quadrature pulse trains for feeding angular rotation and direction of rotation information to digitally controlled equipment, e.g. microcomputer-controlled systems.

DESCRIPTION

The pulse generator employs LEDs and phototransistors to generate two pulse trains on the outputs A and B. An integrated Schmitt-trigger squares the output signals. The unit is panel mounted with a nut. The operating friction prevents flywheel action. The construction is non-sealed. The housing is of black glass-filled polycarbonate, the spindle is stainless steel. The pulse generator can be connected by a modular 0,1 inch pitch connector, such as F095, or can be soldered.

MECHANICAL DATA

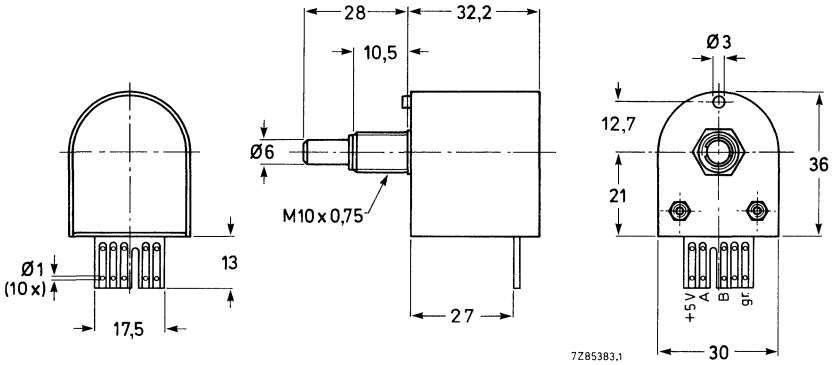

Fig. 1.

CATALOGUE NUMBER

2422 549 90001

RATINGS AND CHARACTERISTICS

Input voltage (d.c.)	typ. 5 V, TTL compatible
Input current	typ. 40 mA
Resolution	256 pulses per rev. 128 pulses output A 128 pulses output B
Phase shift between outputs A and B	90° ± 45° CW and CCW*
Output	see Fig. 2
Electrical circuit	see Fig. 3
Output load 10 kΩ (I_b max. = 0,5 mA)	logic "1" 4,0 V min. logic "0" 0,5 V max. square wave
Operating torque	8 - 30 mNm
Maximum allowable axial force	
push	⩽ 100 N
pull	⩽ 50 N
Mechanical life (360° CW and 360° CCW)	0,5 · 10^6 cycles
Electrical life	50 000 h
Operating temperature	−25 °C to + 60 °C
Storage temperature	−40 °C to + 75 °C
Damp heat steady state (21 days) IEC 68-2-3(c)	no displacement
Bump IEC 68-2-29(Eb) 40g - 6 ms - 4000 bumps	no displacement
Vibration IEC 68-2-6(Fc) 10 - 150 Hz; 5g, 6 h	no displacement
Mechanical load on housing and connector	no continuous load

* Measured at a speed of 1 cycle/min.

Logic

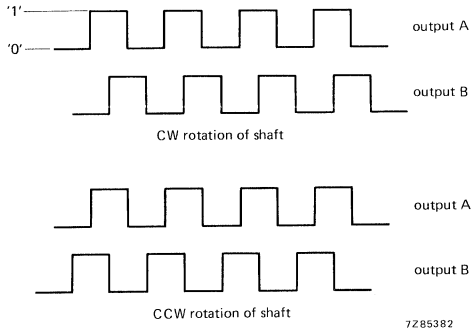

Fig. 2 Output pulses.

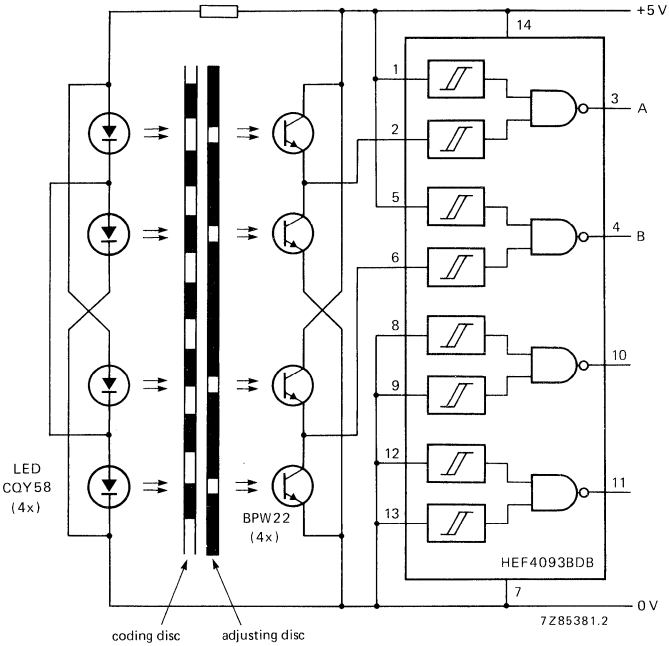

Fig. 3 Functional diagram.

SWITCHES

TEST SWITCHES

APPLICATION

These switches are designed to simplify the testing of any electronic circuit by providing a swift means of changing over from "normal working" to "test" conditions. They are often used for testing a particular section of a circuit immediately after set assembly or later during service.

DESCRIPTION

Three types of switch are available designed for mounting on printed-wiring boards. All types can be supplied for horizontal or vertical mounting.

The basic switch consists of a rotatable selector contact and two or three switch connections, mounted on an insulating plate. By turning the selector contact one of the switch connections can be connected to the centre contact. The contacts are of the "break before make" type.

One switch type is provided with two active switch connections and a "centre-off" position. The second type has three active switch connections; the third type has two active switch connections (without "centre-off" position).

Switches are available for screwdriver-control (allowing the "flatness" of printed-wiring circuitry to be maintained), or finger-control by means of a plastic knob.

OUTLINES

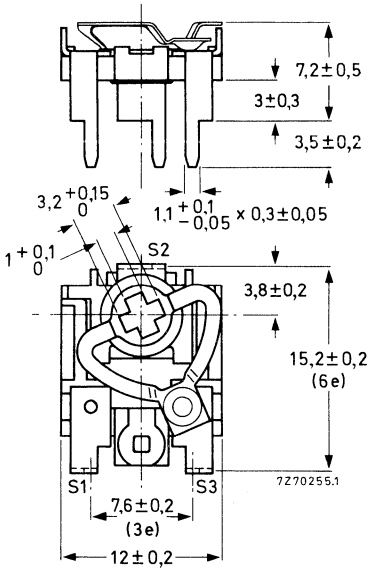

a.

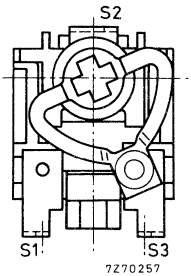

b.

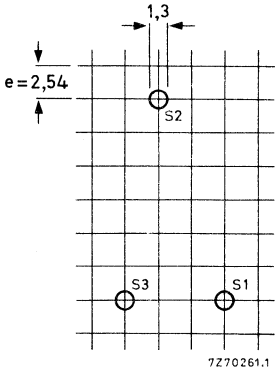

c.

Fig. 1 Test switch for horizontal mounting, with two active switch connections:
a. with "centre-off" position,
b. without "centre-off" position,
c. hole pattern for mounting on a printed-wiring board (solder side).

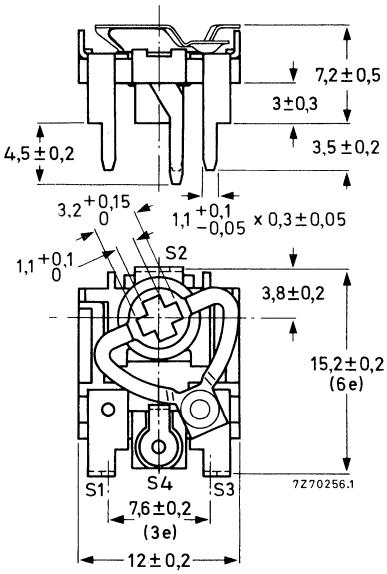

Fig. 2a Test switch for horizontal mounting, with three active switch connections.

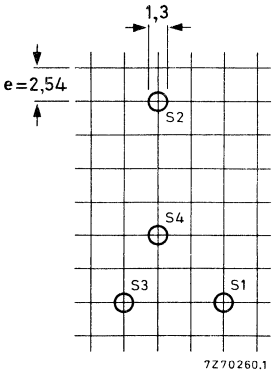

Fig. 2b Hole pattern for mounting on a printed-wiring board (solder side).

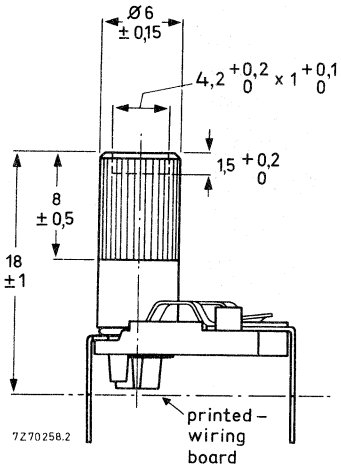

Fig. 3 Test switch for horizontal mounting with adjustment knob at the side of the selector contact.

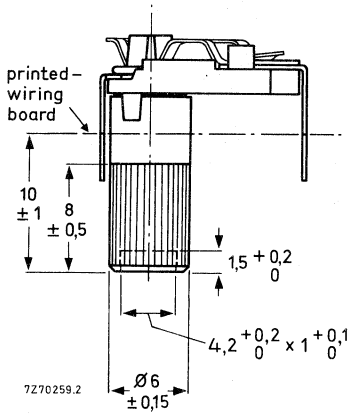

Fig. 4 Test switch for horizontal mounting with adjustment knob at the side of the base plate.

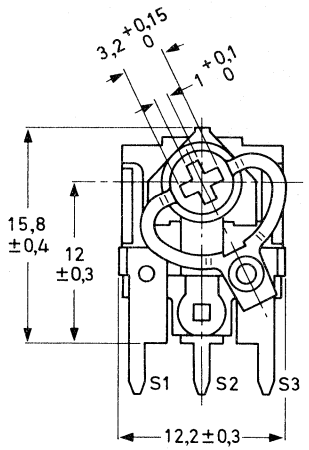

a.

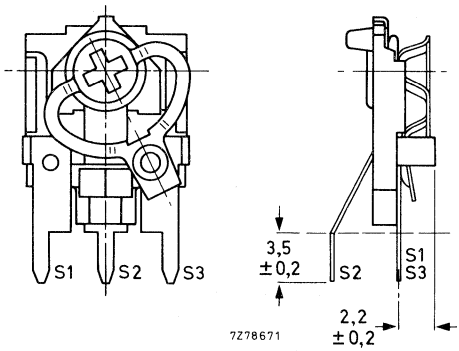

b.

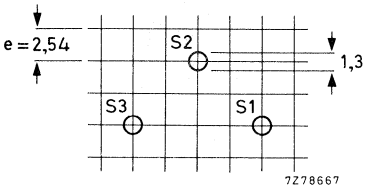

c.

Fig. 5 Test switch for vertical mounting, with two active switch connections;
a. with "centre-off" position,
b. without "centre-off" position,
c. hole pattern for mounting on a printed-wiring board (solder side).

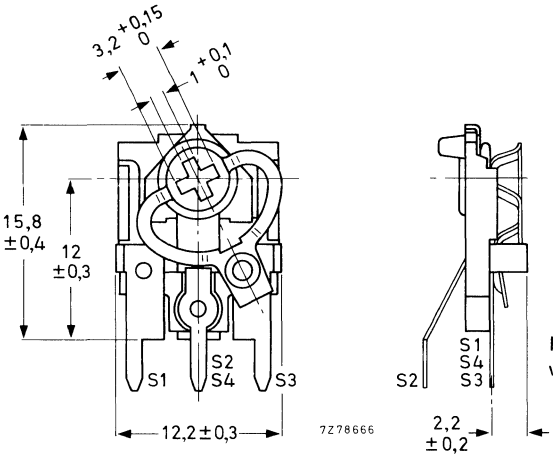

Fig. 6a Test switch for vertical mounting, with three active switch conditions.

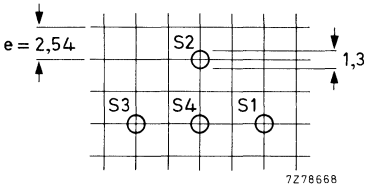

Fig. 6b Hole pattern for mounting on a printed-wiring board (solder side).

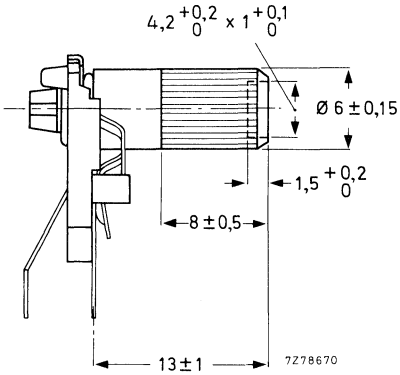

Fig. 7 Test switch for vertical mounting with adjustment knob at the side of the selector contact.

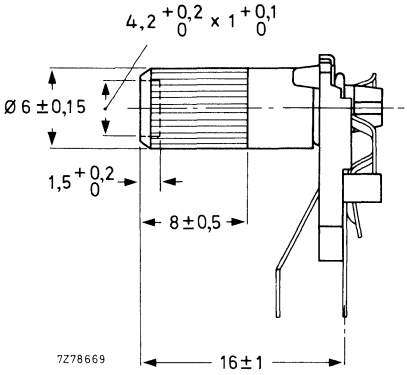

Fig. 8 Test switch for vertical mounting, with adjustment knob at the side of the base plate.

TECHNICAL DATA

Contact resistance	
initially	⩽ 20 mΩ
after 50 switching operations at ⩽ 10 mA, ⩽ 500 V	⩽ 200 mΩ
Operating torque	5 to 50 mNm
End stop torque	⩽ 100 mNm
Life	⩾ 50 switching operations
Mass	
switch without knob	approx. 1 g
switch with knob	approx. 1,5 g

COMPOSITION OF THE CATALOGUE NUMBER

2422 136 7 ....

0 = without knob
1 = with knob at the side of the base plate
2 = with knob at the side of the selector contact

33 = horizontal mounting
72 = vertical mounting

2 = with 2 active switch connections; with off position

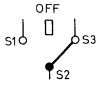

3 = with 3 active switch connections

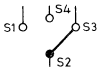

4 = with 2 active switch connections; without off position

The catalogue number of a loose knob, such as used with CTP14, is 4322 047 08280.

BANDSWITCH

The switch is designed for band switching in television or radio tuners. It has three positions of the "break before make" type, and is operated by a lever. It is meant to be used with multiturn carbon preset potentiometers CMP10, CMP20, CMP40.

MECHANICAL DATA

Outline drawing

- Type 2422 136 80213

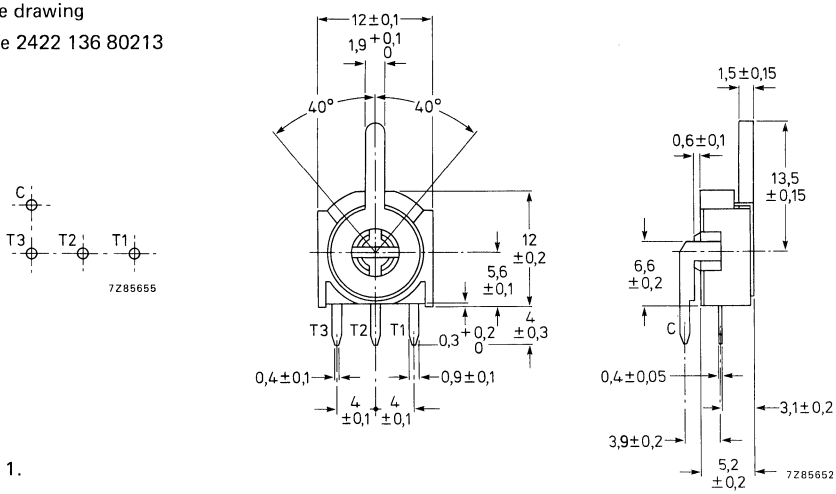

Fig. 1.

- Type 2422 136 80223

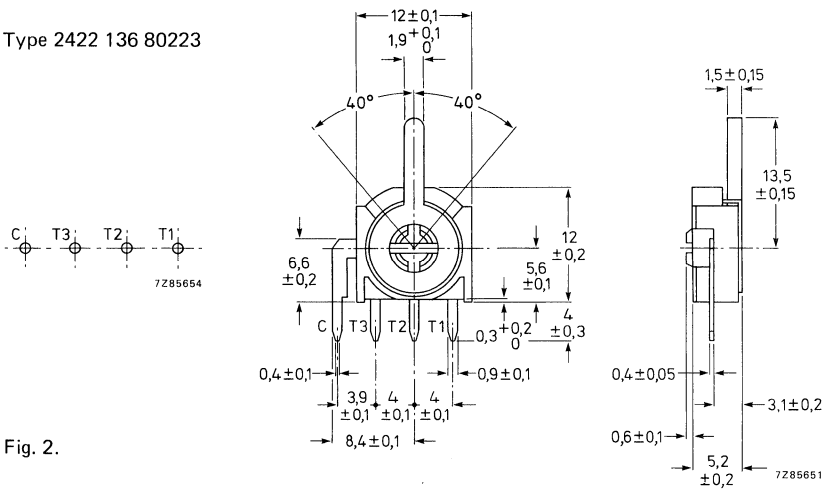

Fig. 2.

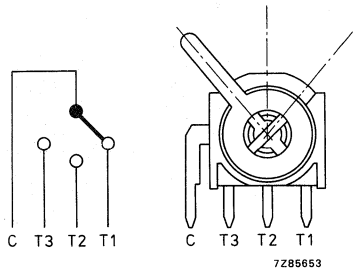

Fig. 3.

Operating torque	10 to 40 mNm
End stop torque	> 200 mNm
Switching angle	2 x 40 degrees
Climatic category	25/070/21
Life	> 250 cycles
No marking on the switch	

ELECTRICAL DATA

Rating (load applied)	12 V/40 mA
Function	1 section, 3 contacts
Contact resistance, max.	50 mΩ at 5 mA

COMPOSITION OF THE CATALOGUE NUMBER

2422 136 802 . .

13 = vertical, p.w. tags displaced, see Fig. 1.

23 = vertical, p.w. tags in line, see Fig. 2.

CIRCUIT BREAKER SWITCH

This circuit breaker switch is for switching off the a.f.c. system in colour television receivers for optimum channel selection.

ELECTRICAL DATA

Contact resistance	< 60 mΩ
Insulation resistance	> 10 MΩ
Maximum load	25 mA/30 V (d.c.)
Maximum voltage (r.m.s.)	100 V (a.c.)
Maximum leakage current	10 μA

CATALOGUE NUMBER 8222 412 73731

MECHANICAL DATA

Outlines

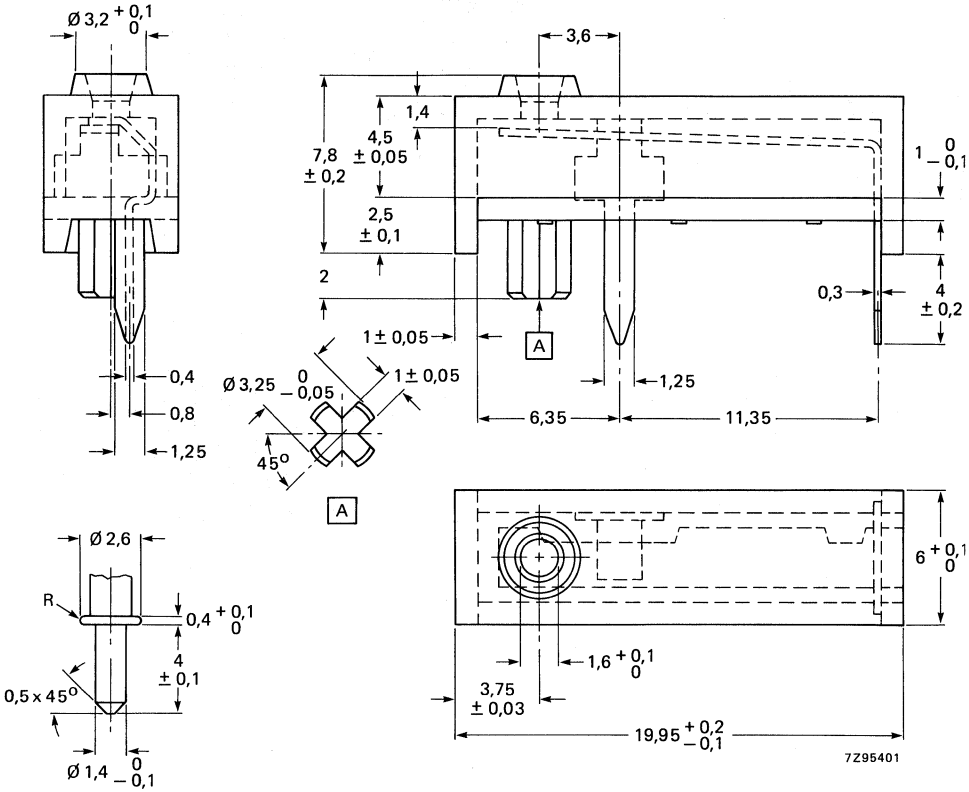

Dimensions of key.

The switch is a single pole type, ususally closed. It is operated by a key which brakes the contact.

Key action	min. 1 mm, max. 2,5 mm
Operating force at 2 mm compression	0,7 N ± 0,3 N
Contact force (when closed)	min. 0,3 N
Operating life	16 000 cycles, loaded 25 mA/30 V (d.c.)
Contacts	phosphor bronze
Operating temperature	−10 to 70 °C
Storage temperature	−25 to 70 °C
Solderability	230 ± 10 °C during 2 ± 0,5 s

DEVELOPMENT DATA

TESTS AND REQUIREMENTS

Unless otherwise specified, the electrical and mechanical values apply at an ambient free air temperature of 15 to 35 °C, an atmospheric pressure of 860 to 1060 hPa and a relative humidity of 45 to 75%.

Table

IEC 393-1 clause	IEC 68-2 test method	test	procedure	requirement
2.14	Na	Rapid change of temperature	5 cycles 34 - 25 °C/34 + 70 °C	The values quoted at Electrical Data are not surpassed
2.3	Ca	Damp heat steady state	21 days at 40 °C R.H. 90 to 95%	
2.30	Db	Damp heat acc. 1st cycle		
2.2	Bb	Dry heat	96 h at 70 °C	
2.1	Ab	Cold	96 h at −25 °C	
–	–	Corrosion	48 h $H_2S + SO_2$	
2.6	Fc	Vibration	frequency 10-55-10 Hz in one octave/min amplitude 0,35 mm 30 min in 3 directions	no damage
	T	Solderability	230 ± 10 °C, 2 ± 0,5 s	good tinning no damage

INDEX

INDEX OF CATALOGUE NUMBERS

catalogue number	type	page
2322 018	WP22	163
020	WP24	169
350	CP23	27
380	CP16	13
381	CP16	13
387	CP16	13
389	CP16	13
390	CP16	13
409	CTP14	183
410	CTP10	177
411	CTP18	193
412	CMP20	221
413	CMP10	221
414	CMP40	221
415	CSP25	135
416	CMP20L	233
417	CMP10L	233
418	CMP40L	233
424	CSP60	153
429	CSP60	153
430	CSP40	143
431	CSP40	143
435	CSP40	143
2322 436	CSP40	143
440	CP13	11
460	MFU	245
481	MCP23	131
482	MTP10	205
483	ECP10	197
484	EMP10	211
500	PP17	79
501	PP17	79
502	PP17	79
505	PP12	33
506	PP12	33
507	PP12	33
508	PP12	33
510	PP17	79
511	PP17	79
512	PP17	79
515	PP12	33
516	PP12	33
517	PP12	33
518	PP12	33
2422 136	—	272
2422 549 90001	MPG256	267

STANDARD SERIES OF VALUES IN A DECADE

for resistances and capacitances

according to IEC publication 63

E192	E96	E48	E192	E96	E48	E192	E96	E48	E192	E96	E48	E192	E96	E48
100	100	100	169	169	169	287	287	287	487	487	487	825	825	825
101			172			291			493			835		
102	102		174	174		294	294		499	499		845	845	
104			176			298			505			856		
105	105	105	178	178	178	301	301	301	511	511	511	866	866	866
106			180			305			517			876		
107	107		182	182		309	309		523	523		887	887	
109			184			312			530			898		
110	110	110	187	187	187	316	316	316	536	536	536	909	909	909
111			189			320			542			920		
113	113		191	191		324	324		549	549		931	931	
114			193			328			556			942		
115	115	115	196	196	196	332	332	332	562	562	562	953	953	953
117			198			336			569			965		
118	118		200	200		340	340		576	576		976	976	
120			203			344			583			988		
121	121	121	205	205	205	348	348	348	590	590	590			
123			208			352			597					
124	124		210	210		357	357		604	604		E24	E12	E6	E3
126			213			361			612					
127	127	127	215	215	215	365	365	365	619	619	619	10	10	10	10
129			218			370			626			11			
130	130		221	221		374	374		634	634		12	12		
132			223			379			642			13			
133	133	133	226	226	226	383	383	383	649	649	649	15	15	15	
135			229			388			657			16			
137	137		232	232		392	392		665	665		18	18		
138			234			397			673			20			
140	140	140	237	237	237	402	402	402	681	681	681	22	22	22	22
142			240			407			690			24			
143	143		243	243		412	412		698	698		27	27		
145			246			417			706			30			
147	147	147	249	249	249	422	422	422	715	715	715	33	33	33	
149			252			427			723			36			
150	150		255	255		432	432		732	732		39	39		
152			258			437			741			43			
154	154	154	261	261	261	442	442	442	750	750	750	47	47	47	47
156			264			448			759			51			
158	158		267	267		453	453		768	768		56	56		
160			271			459			777			62			
162	162	162	274	274	274	464	464	464	787	787	787	68	68	68	
164			277			470			796			75			
165	165		280	280		475	475		806	806		82	82		
167			284			481			816			91			

Electronic components and materials for professional, industrial and consumer uses from the world-wide Philips Group of Companies

Argentina: PHILIPS ARGENTINA S.A., Div. Elcoma, Vedia 3892, 1430 BUENOS AIRES, Tel. 541-7141/7242/7343/7444/7545.
Australia: PHILIPS INDUSTRIES HOLDINGS LTD., Elcoma Division, 11 Waltham Street, ARTARMON, N.S.W. 2064, Tel. (02) 439 3322.
Austria: ÖSTERREICHISCHE PHILIPS BAUELEMENTE INDUSTRIE G.m.b.H., Triester Str. 64, A-1101 WIEN, Tel. 629111-0.
Belgium: N.V. PHILIPS & MBLE ASSOCIATED, 9 rue du Pavillon, B-1030 BRUXELLES, Tel. (02) 242 74 00.
Brazil: IBRAPE, Caixa Postal 7383, Av. Brigadeiro Faria Lima, 1735 SAO PAULO, SP, Tel. (011) 211-2600.
Canada: PHILIPS ELECTRONICS LTD., Elcoma Division, 601 Milner Ave., SCARBOROUGH, Ontario, M1B 1M8, Tel. 292-5161.
Chile: PHILIPS CHILENA S.A., Av. Santa Maria 0760, SANTIAGO, Tel. 39-4001.
Colombia: IND. PHILIPS DE COLOMBIA S.A., c/o IPRELENSO LTD., Cra. 21, No. 56-17, BOGOTA, D.E., Tel. 249 76 24.
Denmark: MINIWATT A/S, Strandlodsvej 2, P.O. Box 1919, DK 2300 COPENHAGEN S, Tel. (01) 54 11 33.
Finland: OY PHILIPS AB, Elcoma Division, Kaivokatu 8, SF-00100 HELSINKI 10, Tel. 172 71.
France: RTC-COMPELEC, 130 Avenue Ledru Rollin, F-75540 PARIS 11, Tel. 43 38 80 00.
Germany (Fed. Republic): VALVO, UB Bauelemente der Philips G.m.b.H., Valvo Haus, Burchardstrasse 19, D-2 HAMBURG 1, Tel. (040) 3296-0.
Greece: PHILIPS HELLENIQUE S.A., Elcoma Division, 54, Syngru Av., ATHENS 11742, Tel. 9215311/319.
Hong Kong: PHILIPS HONG KONG LTD., Elcoma Div., 15/F Philips Ind. Bldg., 24-28 Kung Yip St., KWAI CHUNG, Tel. (0)-245121.
India: PEICO ELECTRONICS & ELECTRICALS LTD., Elcoma Dept., Band Box Building, 254-D Dr. Annie Besant Rd., BOMBAY - 400025, Tel. 4930311/4930590.
Indonesia: P.T. PHILIPS-RALIN ELECTRONICS, Elcoma Div., Setiabudi II Building, 6th Fl., Jalan H.R. Rasuna Said (P.O. Box 223/KBY) Kuningan, JAKARTA – Selatan, Tel. 512572.
Ireland: PHILIPS ELECTRICAL (IRELAND) LTD., Newstead, Clonskeagh, DUBLIN 14, Tel. 693355.
Italy: PHILIPS S.p.A., Sezione Elcoma, Piazza IV Novembre 3, I-20124 MILANO, Tel. 2-6752.1.
Japan: NIHON PHILIPS CORP., Shuwa Shinagawa Bldg., 26-33 Takanawa 3-chome, Minato-ku, TOKYO (108), Tel. 448-5611.
(IC Products) SIGNETICS JAPAN LTD., 8-7 Sanbancho Chiyoda-ku, TOKYO 102, Tel. (03) 230-1521.
Korea (Republic of): PHILIPS ELECTRONICS (KOREA) LTD., Elcoma Div., Philips House, 260-199 Itaewon-dong, Yongsan-ku, SEOUL, Tel. 794-5011.
Malaysia: PHILIPS MALAYSIA SDN. BERHAD, No. 4 Persiaran Barat, Petaling Jaya, P.O.B. 2163, KUALA LUMPUR, Selangor, Tel. 774411.
Mexico: ELECTRONICA, S.A de C.V., Carr. México-Toluca km. 62.5, TOLUCA, Edo. de México 50140, Tel. Toluca 91 (721) 613-00.
Netherlands: PHILIPS NEDERLAND, Marktgroep Elonco, Postbus 90050, 5600 PB EINDHOVEN, Tel. (040) 793333.
New Zealand: PHILIPS NEW ZEALAND LTD., Elcoma Division, 110 Mt. Eden Road, C.P.O. Box 1041, AUCKLAND, Tel. 605-914.
Norway: NORSK A/S PHILIPS, Electronica Dept., Sandstuveien 70, OSLO 6, Tel. 680200.
Peru: CADESA, Av. Alfonso Ugarte 1268, LIMA 5, Tel. 326070.
Philippines: PHILIPS INDUSTRIAL DEV. INC., 2246 Pasong Tamo, P.O. Box 911, Makati Comm. Centre, MAKATI-RIZAL 3116, Tel. 86-89-51 to 59.
Portugal: PHILIPS PORTUGUESA S.A.R.L., Av. Eng. Duarte Pacheco 6, 1009 LISBOA Codex, Tel. 683121.
Singapore: PHILIPS PROJECT DEV. (Singapore) PTE LTD., Elcoma Div., Lorong 1, Toa Payoh, SINGAPORE 1231, Tel. 350 2000.
South Africa: EDAC (PTY.) LTD., 3rd Floor Rainer House, Upper Railway Rd. & Ove St., New Doornfontein, JOHANNESBURG 2001, Tel. 614-2362/9.
Spain: MINIWATT S.A., Balmes 22, BARCELONA 7, Tel. 301 63 12.
Sweden: PHILIPS KOMPONENTER A.B., Lidingövägen 50, S-11584 STOCKHOLM 27, Tel. 08/782 1000.
Switzerland: PHILIPS A.G., Elcoma Dept., Allmendstrasse 140-142, CH-8027 ZÜRICH, Tel. 01-488 22 11.
Taiwan: PHILIPS TAIWAN LTD., 150 Tun Hua North Road, P.O. Box 22978, TAIPEI, Taiwan, Tel. 7120500.
Thailand: PHILIPS ELECTRICAL CO. OF THAILAND LTD., 283 Silom Road, P.O. Box 961, BANGKOK, Tel. 233-6330-9.
Turkey: TÜRK PHILIPS TICARET A.S., Elcoma Department, Inönü Cad, No. 78-80, P.K.504, 80074 ISTANBUL, Tel. 435910.
United Kingdom: MULLARD LTD., Mullard House, Torrington Place, LONDON WC1E 7HD, Tel. 01-580 6633.
United States: (Active Devices & Materials) AMPEREX SALES CORP., Providence Pike, SLATERSVILLE, R.I. 02876, Tel. (401) 762-9000.
(Passive Devices) MEPCO/ELECTRA INC., Columbia Rd., MORRISTOWN, N.J. 07960, Tel. (201) 539-2000.
(Passive Devices & Electromechanical Devices) CENTRALAB INC., 5855 N. Glen Park Rd., MILWAUKEE, WI 53201, Tel. (414)228-7380.
(IC Products) SIGNETICS CORPORATION, 811 East Arques Avenue, SUNNYVALE, California 94086, Tel. (408) 991-2000.
Uruguay: LUZILECTRON S.A., Avda Uruguay 1287, P.O. Box 907, MONTEVIDEO, Tel. 914321.
Venezuela: IND. VENEZOLANAS PHILIPS S.A., c/o MAGNETICA S.A., Calle 6, Ed. Las Tres Jotas, App. Post. 78117, CARACAS, Tel. (02) 2393931.

For all other countries apply to: Philips Electronic Components and Materials Division, International Business Relations, P.O. Box 218, 5600 MD EINDHOVEN, The Netherlands, Telex 35000 phtcnl

AS52

Printed in The Netherlands

9398 140 80011